YANMAR

PARTS CATALOG

0CW10-M49000EN

Last update Mar., 2013

PREFACE

1. This parts catalog is the 1st edition of 3TNV82A-BMBB for HAKO.

Pub.No. : 0CW10-G49000
Published : January, 2009

2. Model name

Engine model	Vehicle	Vehicle made by
3TNV82A-BMBB	TRACTOR	HAKO

Directions for the Parts Catalog.

1.This Parts Catalog shows both standard and optional parts.
2.Parts may change without prior notice.
3.The following is an example of the Parts Catalog format.

0CF10-G21601 29. FUEL INJECTION PUMP(W/BOOST)

(A)=4JH-DT
(B)=4JH-DTZ
(C)=4JH-DTZP
(D)=4JH-DTZA
(E)=4JH-DTZY
(F)=

① REF.	② LEV.	PARTS NO.	DESCRIPTION	Q'TY (A)	(B)	(C)	(D)	(E)	(F)	③ I	⑤ R
1	1	729595-51390	FUEL INJECTION PUMP	1	1	1	1	1			1
1-1	1	729595-51391	FUEL INJECTION PUMP	1	1	1	1	1		N	1
	(A=E00185)	(B=E00200)									
3	2	26022-060162	SCREW M 6X 16	9	9	9	9	9			
3-1 ④	2	26022-060162	SCREW M 6X 16	4	4	4	4	4		K	
	(A=E00156)	(B=E00156)	(C=E00156) (D=E00156)	(E=E00156)							
4	2	129470-51040	CAMSHAFT	1	1	1	1	1			
5	2	122710-51050	BEARING, ROLLER	2	2	2	2	2			
6	2	129470-51060	RETAINER	1	1	1	1	1			

Remarks
(1) BOOST COMPEMSATOR TYPE. OPTIONAL
PART, TO E00155,(4JH-DT, 4JH-DTZ

①Ref. No.

The Ref. No. listed may not be in accordance with the illustration Ref. No.

(Ex.) Illustration No. 1 — List Ref No. 1 (Before change) → 1- 1 (After change)

For interchangeable symbols N, R and K, illustrations for new parts may be abbreviated.

②Lev. (Level)

Level indication
The numbers below indicate the level of relativity towards the main part.
1 ----- Main parts (Assembly parts)
2 ----- Sub component included in " 1 ".
3 ----- Sub component included in " 2 ".
Note) Parts that are not for sale are partially illustrated but not listed.

③Interchangeability Symbol

When a part change takes place, one of the following interchangeability symbols is indicated beside the part.

Symbol	Interchangeability	Contents note
N	Old ← Yes / → No New	New Part is interchangeable for Old Part but Old Part is not interchangeable for New Part.
Q	Old ← No / → Yes New	New Part is not interchangeable for Old Part but Old Part is interchangeable for New Part.
R	Old ← Yes / → Yes New	New/ Old Parts are both interchangeable.
S	Old ← No / → No New	New/ Old Parts are both not interchangeable.
W		Part newly added.
Z		Part discontinued.
F		Not interchangeable by a single part but interchangeable together with related parts.
K		Changes only for used parts quantities.

④Effective Machine No.

When a part changes, the effective Machine No. will be indicated in the (A)-(F) column.

Product Symbol	Product No.	Product Symbol	Product No.
C	Clutch No. Compressor No.	F	Machine No. (Agricultural Equip.)
D	Drive No.	M	Machine No.
E	Engine No.		

Note 1) A date may follow the symbol. (Ex.) 1996.01
Note 2) " XXXXX " and " ZZZZZ " are for parts that could not be predicted or for engine models that could not be identified.
Note 3) (A=E00185) is the E (Engine Serial Number) for the column (A) model (in this case 4JH-DT) after the parts design change.

⑤Remarks

Figures or alphabets (symbols) are entered in the remarks column.
The comments (remarks) on parts that are indicated at the bottom of the illustration are the same symbols as those stated above.

Contents

0CW10-M49000

Fig. No.	Fig. Name
3TNV82A-BMBB	
1.	CYLINDER BLOCK
2.	GEAR HOUSING
3.	MOUNTING FLANGE & OIL SUMP
4.	CYLINDER HEAD & BONNET
5.	SUCTION MANIFOLD
6.	EXHAUST MANIFOLD & SILENCER
7.	CAMSHAFT & DRIVING GEAR
8.	CRANKSHAFT & PISTON
9.	LUB.OIL SYSTEM
10.	COOLING WATER SYSTEM
11.	FUEL INJECTION PUMP
12.	GOVERNOR
13.	FUEL INJECTION VALVE
14.	FUEL LINE
15.	STARTING MOTOR
16.	GENERATOR
18.	(16A)GENERATOR (FROM E69638
17.	GASKET SET

0CW10-M49000 3TNV82A-BMBB

Fig.1. CYLINDER BLOCK

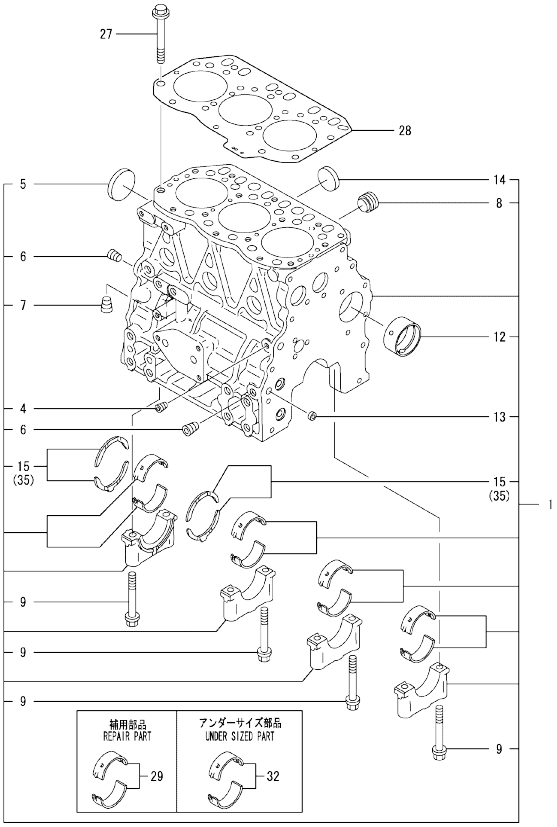

Remarks
(1) REPAIR PART.
(2) UNDER-SIZED(U.S=0.25)PART.
(3) OVER-SIZED(O.S=0.25)PART.

(A)=3TNV82A-BMBB (D)=
(B)= (E)=
(C)= (F)=

No.	Lev.	Parts No.	Description	Q'ty (A)	(B)	(C)	(D)	(E)	(F)	I	R
1	1	719802-01560	BLOCK ASSY, CYLINDER	1							
4	2	124060-01050	PLUG, PT1/8	1							
5	2	129001-01250	PLUG, 50	1							
6	2	124160-01910	PLUG, PT1/4	2							
7	2	124160-01910	PLUG, PT1/4	1							
8	2	171051-01921	PLUG, NPTF1	1							
9	2	119620-02020	BOLT, METAL CAP	8							
12	2	129795-02412	BUSH, CAMSHAFT	1							
13	2	27241-120000	PLUG, 12	2							
14	2	27241-300000	PLUG 30	6							
15	2	119717-02930	BEARING, THRUST	2							
27	1	119810-01200	BOLT, HEAD	14							
28	1	119812-01330	GASKET, HEAD	1							
29	1	719810-02981	BEARING, MAIN	4							1
32	1	119810-02871	BEARING, 0.25 US	4							2
35	1	119810-02941	BEARING, THRUST 0.25	2							3

N:Old ◄Yes/No► New. Q:Old ◄No/Yes► New. R:Old ◄Yes/Yes► New. S:Old ◄No/No► New. W:Add. Z:Discontinued. F:Interchangeable by set. K:Q'ty Change

Copyright (C) YANMAR GLOBAL CS CO., LTD. All RightsReserved.

Fig.2. GEAR HOUSING

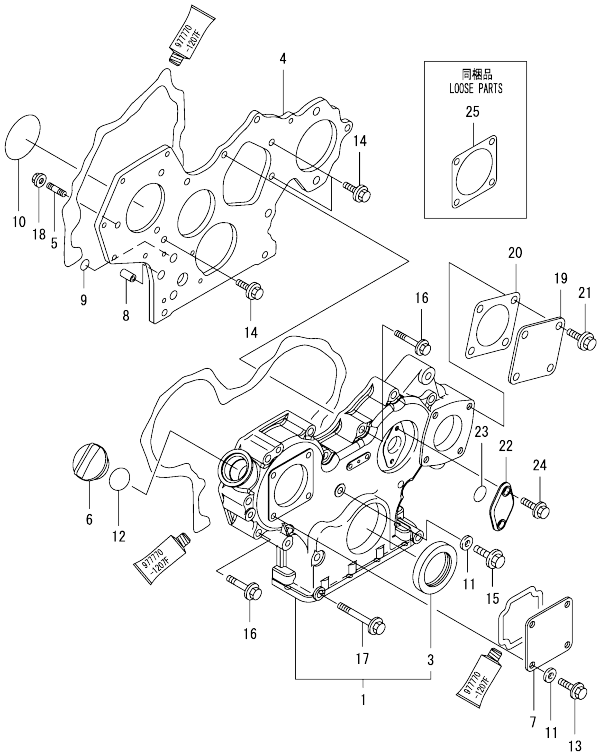

(A)=3TNV82A-BMBB (D)=
(B)= (E)=
(C)= (F)=

No.	Lev.	Parts No.	Description	Q'ty (A)	(B)	(C)	(D)	(E)	(F)	I	R
1	1	729652-01500	CASE ASSY, GEAR	1							
3	2	119934-01800	SEAL, OIL	1							
4	1	129604-01520	FLANGE, GEAR CASE	1							
5	1	119802-01561	STUD, M8X25	3							
6	1	124160-01751	COVER, FILLER	1							
7	1	124240-01871	COVER	1							
8	1	129795-01950	PIPE, KNOCK L=18	2							
9	1	119609-32040	O-RING, P16	2							
10	1	121850-51960	O-RING	1							
11	1	22190-080002	WASHER, SEAL 6	5							
12	1	24311-000320	O-RING, 1AP32.0	1							
13	1	26106-080162	BOLT, M8X 16 PLATED	4							
14	1	26106-080162	BOLT, M8X 16 PLATED	3							
15	1	26106-080302	BOLT, M8X 30 PLATED	1							
16	1	26106-080552	BOLT, M8X 55 PLATED	10							
17	1	26106-080852	BOLT, M8X 85 PLATED	3							
18	1	26306-080002	NUT, M8	3							
19	1	124240-01871	COVER	1							
20	1	124240-01883	GASKET	1							
21	1	26106-080162	BOLT, M8X 16 PLATED	4							
22	1	121023-01551	COVER	1							
23	1	24341-000240	O-RING, 1AS24.0	1							
24	1	26106-060162	BOLT, M6X 16 PLATED	2							
25	1	124240-01883	GASKET	1						Z	
	(A=EZZZZZ)										

N:Old ←Yes/No→ New. Q:Old ←No/Yes→ New. R:Old ←Yes/Yes→ New. S:Old ←No/No→ New. W:Add. Z:Discontinued. F:Interchangeable by set. K:Q'ty Change

Copyright (C) YANMAR GLOBAL CS CO., LTD. All RightsReserved.

Fig.3. MOUNTING FLANGE & OIL SUMP

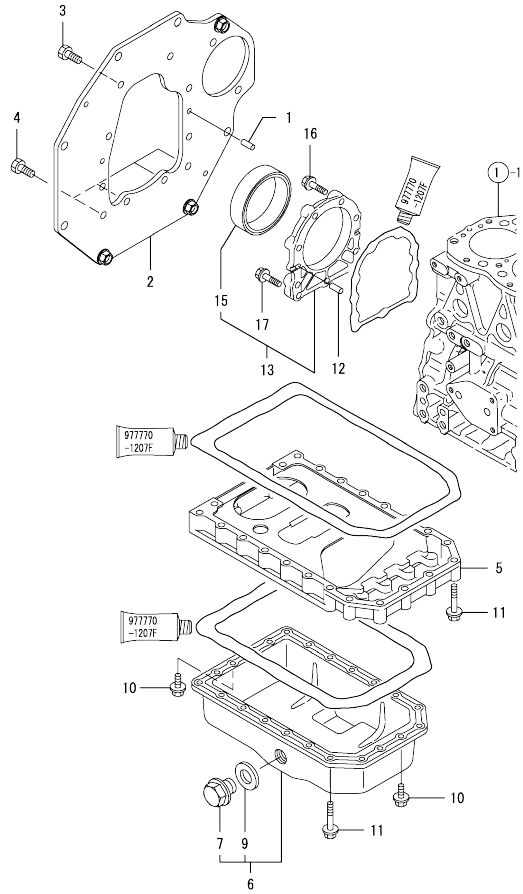

(A)=3TNV82A-BMBB (D)=
(B)= (E)=
(C)= (F)=

No.	Lev.	Parts No.	Description	Q'ty (A)	(B)	(C)	(D)	(E)	(F)	I	R
1	1	129100-01580	PIN, M8X16	2							
2	1	119923-01611	FLANGE, MOUNTING	1							
3	1	26206-100202	BOLT, M10X 20 PLATED	6							
4	1	26206-100252	BOLT, M10X 25 PLATED	4							
5	1	119810-01730	SPACER, OIL SUMP	1							
6	1	119843-01780	SUMP ASSY, OIL	1							
7	2	119640-01640	PLUG, DRAIN M22	1							
9	2	22190-220002	WASHER, SEAL 22	1							
10	1	26106-080162	BOLT, M8X 16 PLATED	6							
11	1	26106-080452	BOLT, M8X 45 PLATED	22							
12	1	129100-01580	PIN, M8X16	2							
13	1	129100-01640	CASE ASSY, OIL SEAL	1							
15	2	129795-01780	SEAL, OIL	1							
16	1	129486-01670	BOLT, M8X30	6							
17	1	26106-080352	BOLT, M8X 35 PLATED	3							

N:Old ←Yes/No→ New. Q:Old ←No/Yes→ New. R:Old ←Yes/Yes→ New. S:Old ←No/No→ New. W:Add. Z:Discontinued. F:Interchangeable by set. K:Q'ty Change

Copyright (C) YANMAR GLOBAL CS CO., LTD. All RightsReserved.

Fig.4. CYLINDER HEAD & BONNET

(A)=3TNV82A-BMBB
(B)=
(C)=
(D)=
(E)=
(F)=

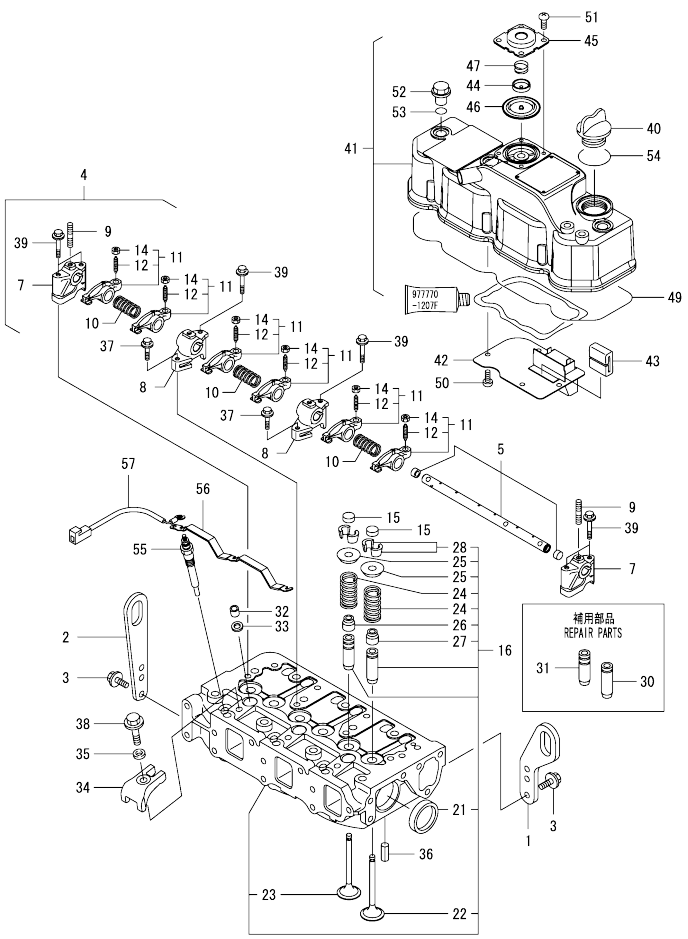

No.	Lev.	Parts No.	Description	Q'ty (A)	(B)	(C)	(D)	(E)	(F)	I	R
1	1	129486-07901	LIFTER	1						Z	
	(A=EZZZZZ)										
2	1	129900-07900	LIFTER	1							
3	1	26106-080162	BOLT, M8X 16 PLATED	4							
3-1	1	26106-080162	BOLT, M8X 16 PLATED	2						K	
	(A=EZZZZZ)										
4	1	119802-11241	SHAFT ASSY, ROCKER	1							
5	2	119802-11251	SHAFT, ROCKER ARM	1							
7	2	119802-11260	SUPPORT, ROCKER ARM	2							
8	2	119802-11270	SUPPORT, ROCKER ARM	2							
9	2	119802-11280	STUD	3							
10	2	129150-11280	SPRING	3							
11	2	119802-11650	ARM, ROCKER	6							
12	3	129150-11230	SCREW, VALVE ADJUST	6							
14	3	129150-11750	NUT, M8	6							
15	1	104211-11370	CAP, VALVE	6							
16	1	119803-11700	HEAD ASSY, CYLINDER	1							
16-1	1	119803-11730	HEAD ASSY, CYLINDER	1						S	2
	(A=E/#70581)										
21	2	27241-400000	PLUG, 40	2							
22	2	119802-11100	VALVE, INTAKE	3							
23	2	119802-11110	VALVE, EXHAUST	3							
24	2	119810-11120	SPRING, VALVE	6							
25	2	104211-11180	RETAINER, SPRING	6							
26	2	119803-11340	SEAL, VALVE STEM	3							
27	2	124160-11340	SEAL, VALVE STEM	3							
28	2	27310-070001	COTTER, 7	6							
30	1	124060-11800	GUIDE, VALVE	3							1
31	1	119802-11810	GUIDE, VALVE	3							1
32	1	119802-11870	PROTECTOR, NOZZLE	3							
33	1	119625-11880	SEAT, NOZZLE	3							
34	1	119802-11900	RETAINER, NOZZLE	3							
35	1	120270-54410	WASHER, INJECTOR	3							
36	1	22351-060012	PIN, SPRING 6.0X12	2							
37	1	26106-080252	BOLT, M8X 25 PLATED	2							
38	1	26106-080452	BOLT, M8X 45 PLATED	3							
39	1	26106-080502	BOLT, M8X 50 PLATED	6							
40	1	124160-01751	COVER, FILLER	1							
41	1	119802-11350	BONNET ASSY, HEAD	1							
42	2	119802-03010	PLATE	1							
43	2	129150-03070	BAFFLE, BREATHER	1							
44	2	119802-03110	PLATE	1							
45	2	119802-03121	COVER, DIAPHRAGM	1							
46	2	119802-03130	DIAPHRAGM	1							
47	2	119802-03141	SPRING, DIAPHRAGM	1							
49	2	119802-11310	GASKET, BONNET	1							
50	2	22857-500100	SCREW, 5X10	4							
51	2	22857-500100	SCREW, 5X10	4							
52	1	124160-11360	KNOB	3							
53	1	24311-000120	O-RING, 1AP12.0	3							
54	1	24311-000320	O-RING, 1AP32.0	1							

N:Old $\xleftarrow[\text{No}]{\text{Yes}}$ New. Q:Old $\xleftarrow[\text{Yes}]{\text{No}}$ New. R:Old $\xleftarrow[\text{Yes}]{\text{Yes}}$ New. S:Old $\xleftarrow[\text{No}]{\text{No}}$ New. W:Add. Z:Discontinued. F:Interchangeable by set. K:Q'ty Change

++ CONTINUE ++

Copyright (C) YANMAR GLOBAL CS CO., LTD. All RightsReserved.

Fig.4. CYLINDER HEAD & BONNET

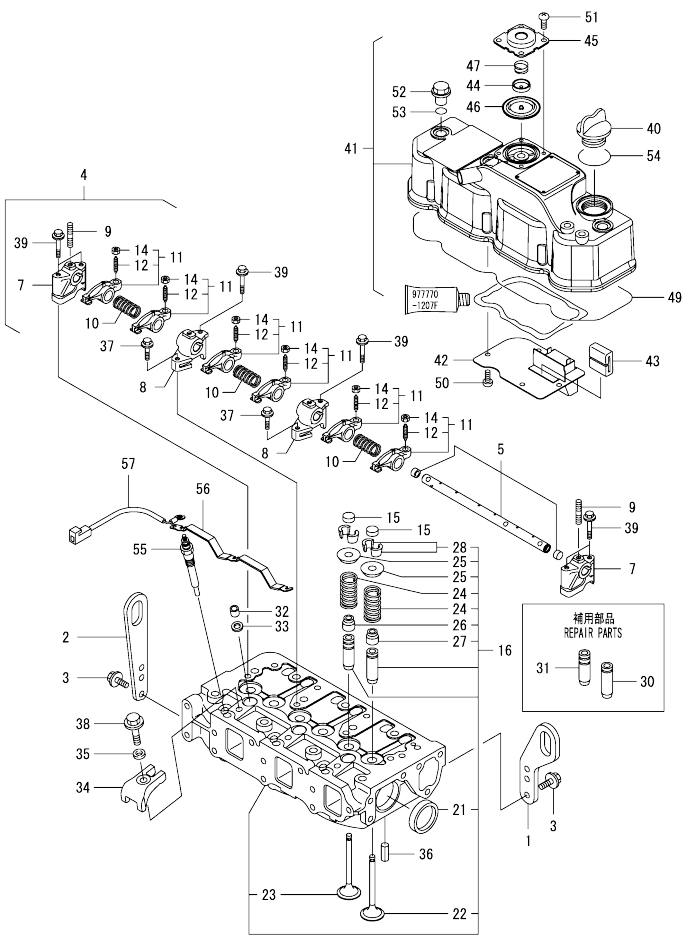

(A)=3TNV82A-BMBB (D)=
(B)= (E)=
(C)= (F)=

No.	Lev.	Parts No.	Description	Q'ty (A)	(B)	(C)	(D)	(E)	(F)	I	R
55	1	129008-77800	PLUG, GLOW	3							
56	1	119803-77821	CONNECTOR, GLOW PLUG	1							
57	1	119803-77830	HARNESS, WIRE	1							

N:Old ←Yes/No→ New. Q:Old ←No/Yes→ New. R:Old ←Yes/Yes→ New. S:Old ←No/No→ New. W:Add. Z:Discontinued. F:Interchangeable by set. K:Q'ty Change

Copyright (C) YANMAR GLOBAL CS CO., LTD. All RightsReserved.

Fig.5. SUCTION MANIFOLD

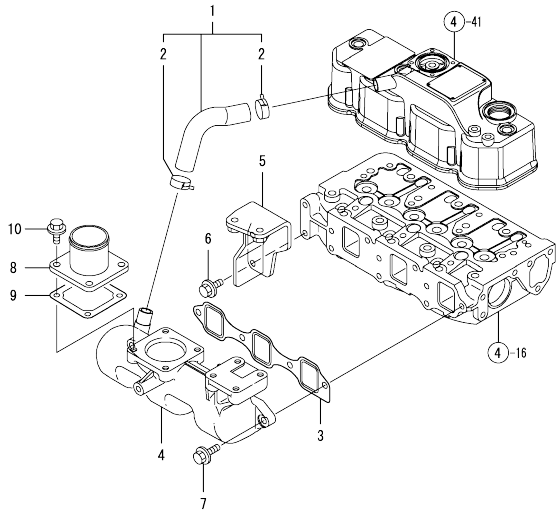

(A)=3TNV82A-BMBB (D)=
(B)= (E)=
(C)= (F)=

No.	Lev.	Parts No.	Description	Q'ty (A)	(B)	(C)	(D)	(E)	(F)	I	R
1	1	119802-03090	PIPE , BREATHER	1							
2	2	129410-03990	CLIP	2							
3	1	119810-12112	GASKET, MANIFOLD	1							
4	1	119802-12140	MANIFOLD, AIR INTAKE	1							
5	1	119953-55610	STAY, FILTER	1							
6	1	26106-080162	BOLT, M8X 16 PLATED	2							
7	1	26106-080252	BOLT, M8X 25 PLATED	4							
8	1	129486-12581	JOINT, MANIFOLD	1							
9	1	129150-77511	GASKET	1							
10	1	26106-080202	BOLT, M8X 20 PLATED	4							

N:Old ←Yes/No→ New. Q:Old ←No/Yes→ New. R:Old ←Yes/Yes→ New. S:Old ←No/No→ New. W:Add. Z:Discontinued. F:Interchangeable by set. K:Q'ty Change

Copyright (C) YANMAR GLOBAL CS CO., LTD. All RightsReserved.

Fig.6. EXHAUST MANIFOLD & SILENCER

(A)=3TNV82A-BMBB (D)=
(B)= (E)=
(C)= (F)=

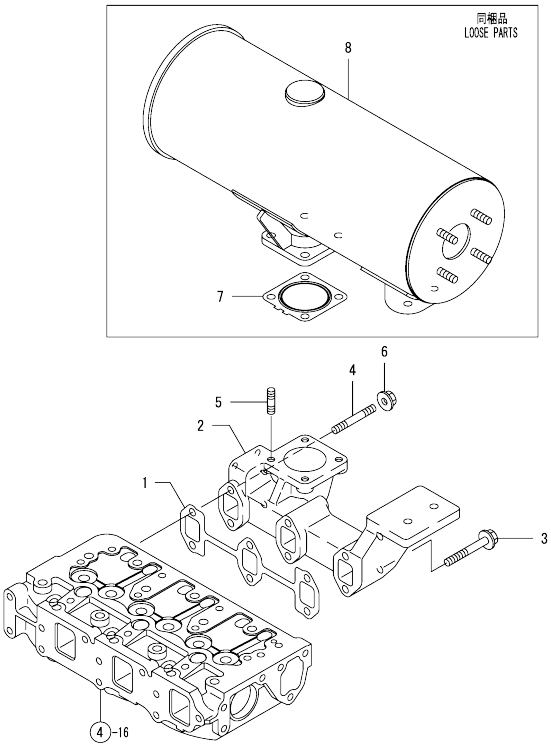

No.	Lev.	Parts No.	Description	Q'ty (A)	(B)	(C)	(D)	(E)	(F)	I	R
1	1	119810-13110	GASKET	1							
2	1	119802-13130	MANIFOLD, EXHAUST	1							
3	1	119802-13640	BOLT, M8X60 10.9T	4							
4	1	119802-13740	STUD, M8X60	2							
5	1	119131-18320	STUD, M8X22	4							
6	1	26306-080002	NUT, M8	2							
7	1	129004-13200	GASKET, SILENCER	2							
8	1	129004-13550	SILENCER	1							

N:Old ◄Yes/No► New. Q:Old ◄No/Yes► New. R:Old ◄Yes/Yes► New. S:Old ◄No/No► New. W:Add. Z:Discontinued. F:Interchangeable by set. K:Q'ty Change

Copyright (C) YANMAR GLOBAL CS CO., LTD. All RightsReserved.

Fig.7. CAMSHAFT & DRIVING GEAR

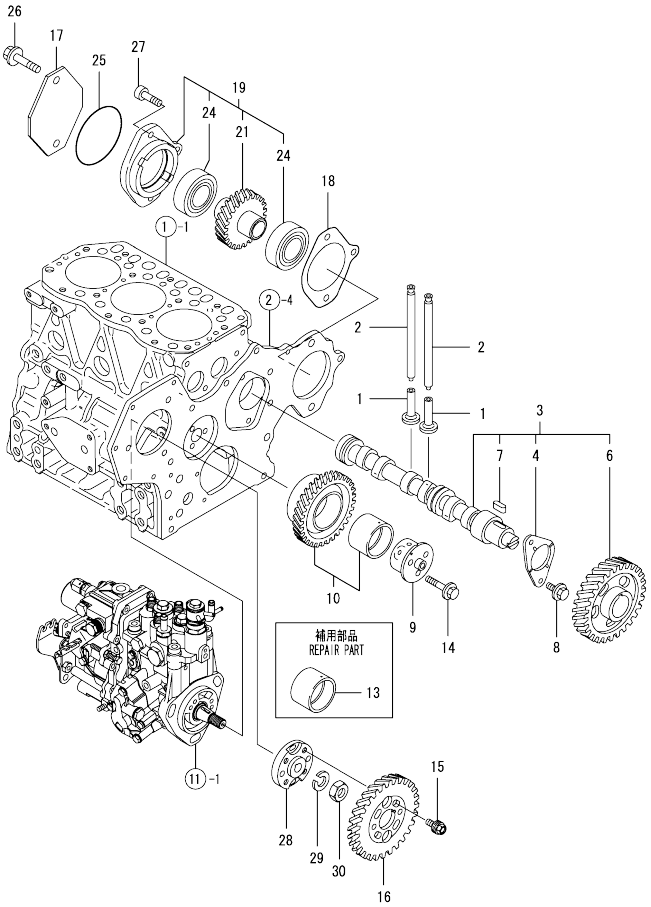

(A)=3TNV82A-BMBB
(B)=
(C)=
(D)=
(E)=
(F)=

No.	Lev.	Parts No.	Description	Q'ty (A)	(B)	(C)	(D)	(E)	(F)	I	R
1	1	129150-14200	TAPPET	6							
2	1	119810-14400	ROD, PUSH	6							
3	1	119802-14580	CAMSHAFT ASSY	1							
4	2	129150-02450	BEARING, THRUST	1							
6	2	129150-14101	GEAR, CAMSHAFT	1							
7	2	22512-070140	KEY, 7X 14	1							
8	1	26106-080142	BOLT, M8X 14 PLATED	2							
9	1	119803-25050	SHAFT, IDLE	1							
10	1	119802-25101	GEAR ASSY, IDLE	1							
13	1	119802-25071	BUSH, IDLE GEAR	1							1
14	1	26106-080402	BOLT, M8X 40 PLATED	3							
15	1	129150-25301	BOLT	4							
16	1	119802-25901	GEAR, PUMP	1							
17	1	121023-26070	COVER	1							
18	1	171353-26081	GASKET	1							
19	1	129484-26200	DRIVE ASSY, PUMP	1							
21	2	129484-26210	GEAR ASSY	1							
24	2	24105-060064	BEARING, BALL 6006Z	2							
25	1	24321-000850	O-RING, 1AG85.0	1							
26	1	26106-100452	BOLT, M10X 45 PLATED	2							
27	1	26450-080282	BOLT, M8X 28	1							
28	1	158552-51151	FLANGE	1							
29	1	22217-140000	WASHER, SPRING 14	1							
30	1	26776-140002	NUT, LOCK M14	1							

N:Old ←Yes/No→ New. Q:Old ←No/Yes→ New. R:Old ←Yes/Yes→ New. S:Old ←No/No→ New. W:Add. Z:Discontinued. F:Interchangeable by set. K:Q'ty Change

Copyright (C) YANMAR GLOBAL CS CO., LTD. All RightsReserved.

Fig.8. CRANKSHAFT & PISTON

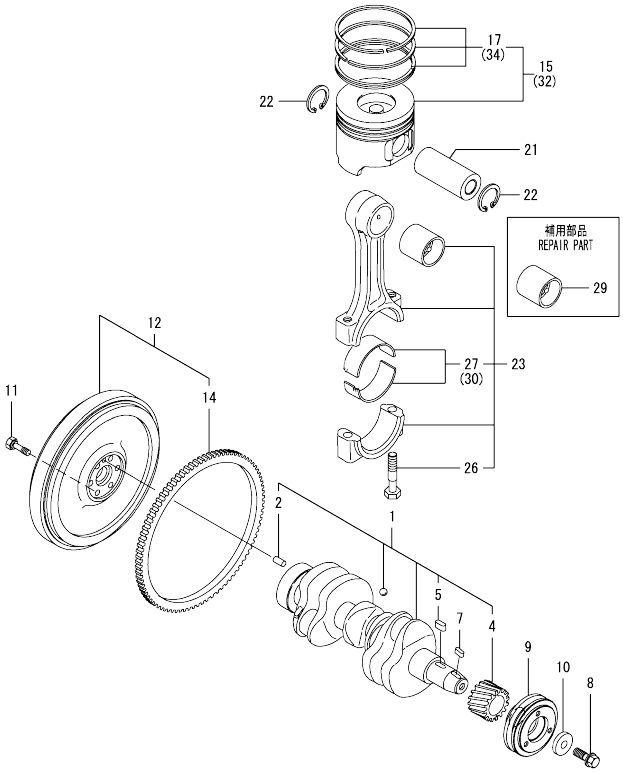

(A)=3TNV82A-BMBB (D)=
(B)= (E)=
(C)= (F)=

No.	Lev.	Parts No.	Description	Q'ty (A)	(B)	(C)	(D)	(E)	(F)	I	R
1	1	119803-21000	CRANKSHAFT ASSY	1							
2	2	129100-01580	PIN, M8X16	1							
4	2	119803-21200	GEAR, CRANKSHAFT	1							
5	2	22512-070140	KEY, 7X 14	1							
7	1	22512-070140	KEY, 7X 14	1							
8	1	129916-21610	BOLT	1							
9	1	129564-21650	V-PULLEY, 110	1							
10	1	129795-21661	WASHER	1							
11	1	124160-21501	BOLT, FLYWHEEL	6							
12	1	119953-21580	FLYWHEEL ASSY	1							
14	2	119865-21600	GEAR, RING	1							
15	1	119803-22080	PISTON ASSY	3							
17	2	119802-22500	RING SET, PISTON	3							
21	1	119813-22300	PIN, PISTON	3							
22	1	129792-22400	CIRCLIP, 23	6							
23	1	719810-23100	ROD ASSY, CONNECTING	3							
26	2	119810-23200	BOLT, CONNECTING ROD	6							
27	2	119810-23601	BEARING, CRANK PIN	3							
29	1	119810-23910	BEARING, PISTON PIN	3							1
30	1	119810-23611	BEARING, 0.25 US	3							2
32	1	719803-22900	PISTON ASSY, 0.25 OS	3							3
34	2	119802-22950	RING SET, 0.25 OS	3							3

N:Old ←Yes/No→ New. Q:Old ←No/Yes→ New. R:Old ←Yes/Yes→ New. S:Old ←No/No→ New. W:Add. Z:Discontinued. F:Interchangeable by set. K:Q'ty Change

Copyright (C) YANMAR GLOBAL CS CO., LTD. All RightsReserved.

Fig.9. LUB.OIL SYSTEM

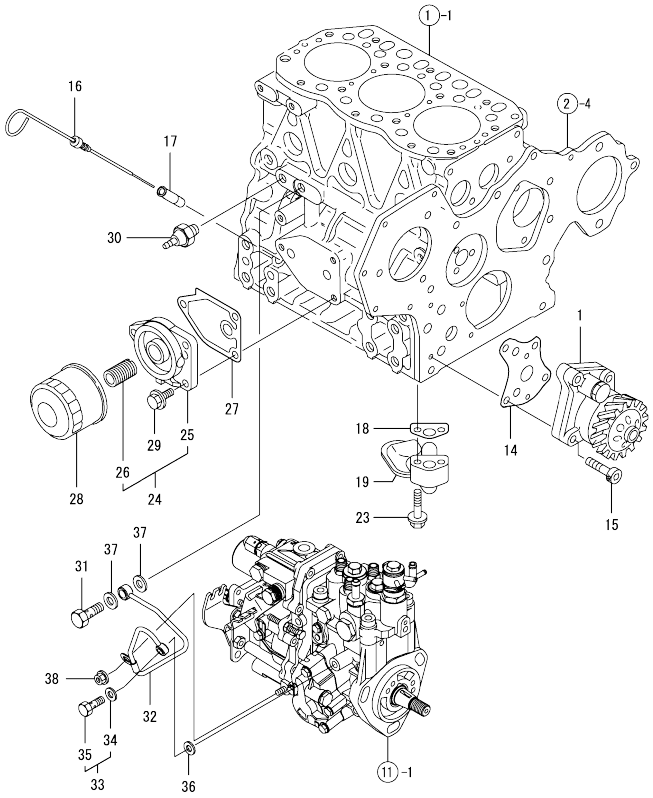

(A)=3TNV82A-BMBB (D)=
(B)= (E)=
(C)= (F)=

No.	Lev.	Parts No.	Description	Q'ty (A)	(B)	(C)	(D)	(E)	(F)	I	R
1	1	129001-32001	PUMP ASSY, OIL	1							
14	1	129150-32020	GASKET, PUMP	1							
15	1	26450-060252	BOLT, M6X 25	4							
16	1	119802-34812	DIPSTICK, OIL	1							
17	1	121520-34810	GUIDE, DIPSTICK	1							
18	1	129150-35042	GASKET	1							
19	1	119810-35401	PIPE ASSY, OIL INLET	1							
23	1	26106-080352	BOLT, M8X 35 PLATED	2							
24	1	119802-35100	BRACKET ASSY, FILTER	1							
25	2	119802-35110	BRACKET, FILTER	1							
26	2	129100-35140	STUD	1							
27	1	129150-35111	GASKET	1							
28	1	129150-35153	FILTER	1							1
29	1	26106-080202	BOLT, M8X 20 PLATED	3							
30	1	114250-39450	SWITCH, 0.5KG	1							
31	1	124160-39140	BOLT, PIPE JOINT M10	1							
32	1	119802-39450	PIPE ASSY, OIL	1							
33	1	129005-59830	BOLT ASSY, JOINT M8	1							
34	2	22190-080002	WASHER, SEAL 6	1							
35	2	23857-030000	BOLT, JOINT 3	1							
36	1	22190-080002	WASHER, SEAL 6	1							
37	1	22190-100002	WASHER, SEAL 10	2							
38	1	26366-060002	NUT, M6	1							

N:Old ←Yes/No→ New. Q:Old ←No/Yes→ New. R:Old ←Yes/Yes→ New. S:Old ←No/No→ New. W:Add. Z:Discontinued. F:Interchangeable by set. K:Q'ty Change

Copyright (C) YANMAR GLOBAL CS CO., LTD. All RightsReserved.

Fig.10. COOLING WATER SYSTEM

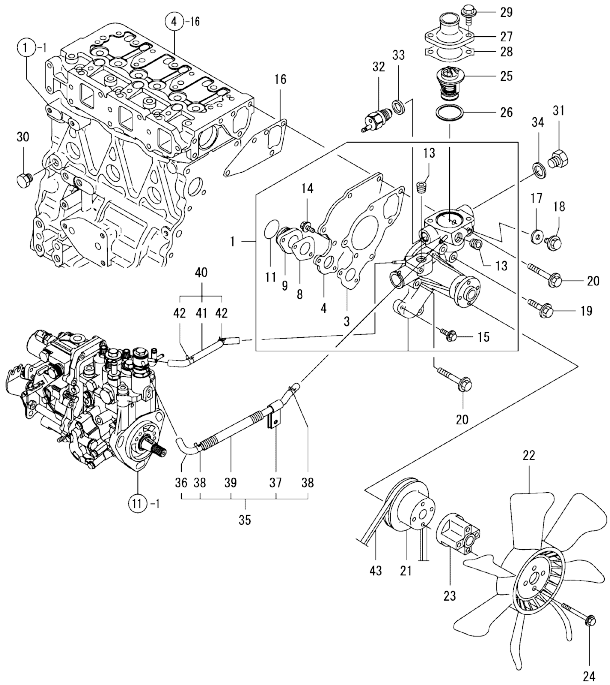

Remarks
(1)REPAIR PART.
(2)NO.16-1 & FIG.13 NO.1-1
INTERCHANGEABLE BY SET.

(A)=3TNV82A-BMBB (D)=
(B)= (E)=
(C)= (F)=

No.	Lev.	Parts No.	Description	Q'ty (A)	(B)	(C)	(D)	(E)	(F)	I	R
1	1	119802-42001	PUMP ASSY, WATER	1							
3	2	119810-42051	GASKET, WATER PUMP	1							
4	2	119810-42120	PLATE	1							
8	2	119810-42281	GASKET, WATER PUMP	1							
9	2	119810-42290	PIPE	1							
11	2	129054-42320	O-RING	1							
13	2	23876-030000	PLUG, R03	2							
14	2	26106-060142	BOLT, M6X 14 PLATED	2							
15	2	26106-060202	BOLT, M6X 20 PLATED	2							
16	1	129486-42050	GASKET, WATER PUMP	1							
17	1	23414-080000	GASKET, 8X1.0	1							
18	1	26106-080122	BOLT, M8X 12 PLATED	1							
19	1	26106-080352	BOLT, M8X 35 PLATED	1							
20	1	26106-080552	BOLT, M8X 55 PLATED	3							
21	1	129155-42350	V-PULLEY	1							
22	1	129120-44741	FAN, COOLING 360	1							
23	1	119256-44760	SPACER, FAN	1							
24	1	26106-060602	BOLT, M6X 60 PLATED	4							
25	1	129155-49801	THERMOSTAT, 71	1							
26	1	129150-49811	GASKET, THERMOSTAT	1							
27	1	129350-49530	COVER, THERMOSTAT	1							
28	1	129795-49551	GASKET	1							
29	1	26106-080222	BOLT, M8X 22 PLATED	2							
30	1	171056-49120	PLUG, DRAIN	1							
31	1	121450-42450	PLUG, M16	1							
32	1	121250-44901	SWITCH, 110	1							
33	1	124465-44950	GASKET, 16	1							
34	1	124465-44950	GASKET, 16	1							
35	1	119802-49610	PIPE ASSY, WATER	1							
36	2	119802-49711	PIPE ASSY, WATER	1							
37	2	119802-49730	RETAINER, PIPE	1							
38	2	124722-59050	CLIP, HOSE 9	2							
39	2	119802-59320	TUBE, CORRUGATED	1							
40	1	119802-49620	PIPE ASSY, WATER	1							
41	2	119802-49721	PIPE ASSY, WATER	1							
42	2	124722-59050	CLIP, HOSE 9	2							
43	1	119865-42290	V-BELT, A36.5	1							W
	(A=EZZZZZ)										

N:Old $\frac{\text{Yes}}{\text{No}}$ New. Q:Old $\frac{\text{No}}{\text{Yes}}$ New. R:Old $\frac{\text{Yes}}{\text{Yes}}$ New. S:Old $\frac{\text{No}}{\text{No}}$ New. W:Add. Z:Discontinued. F:Interchangeable by set. K:Q'ty Change

Copyright (C) YANMAR GLOBAL CS CO., LTD. All RightsReserved.

Fig.11. FUEL INJECTION PUMP

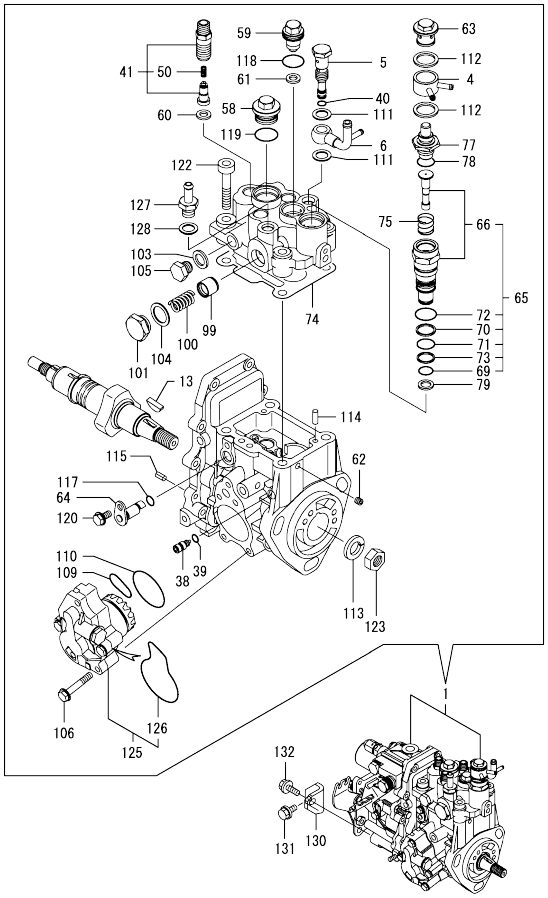

(A)=3TNV82A-BMBB (D)=
(B)= (E)=
(C)= (F)=

No.	Lev.	Parts No.	Description	Q'ty (A)	(B)	(C)	(D)	(E)	(F)	I	R
1	1	719953-51400	PUMP ASSY, INJECTION	1							1
4	2	158553-51551	JOINT	1							
5	2	158601-51650	JOINT, OVER FLOW	1							
6	2	158552-51670	JOINT, OVER FLOW	1							
13	2	119802-51090	KEY, 4X16	1							
38	2	158600-51270	STOPPER, TAPPET	1							
39	2	158563-51281	O-RING, 4D S6	1							
40	2	158563-51281	O-RING, 4D S6	1							
41	2	129008-51390	VALVE ASSY, DELIVERY	3							
50	3	158563-51330	SPRING, DELIVERY	3							
58	2	158601-51550	PLUG	1							
59	2	119802-51560	PLUG, BARREL	1							
60	2	158552-51571	GASKET	3							
61	2	158552-51571	GASKET	1							
62	2	158557-51570	PLUG	1							
63	2	158601-51570	PLUG	1							
64	2	158552-51580	LIFTER	1							
65	2	119802-51590	TIMER SET	1							
66	3	119802-51600	TIMER ASSY	1							
69	3	158553-51670	O-RING, 1011	1							
70	3	119802-51680	RING, BACK UP	1							
71	3	119802-51690	O-RING	1							
72	3	24356-010200	O-RING, 4D1020	1							
73	3	24372-000150	RING, BACK UP T2P15	1							
74	2	158552-51600	GASKET	1							
75	2	158553-51630	SPRING, TIMER	1							
77	2	158553-51650	ELEMENT	1							
78	2	158553-51660	O-RING, P14	1							
79	2	158553-51680	GASKET	1							
99	2	158601-51770	PISTON	1							
100	2	158552-51781	SPRING	1							
101	2	158601-51790	PLUG	1							
103	2	22190-120002	WASHER, SEAL 12	1							
104	2	22190-180002	WASHER, SEAL 18	1							
105	2	23887-120002	PLUG, 12	1							
106	2	158553-51770	BOLT	4							
109	2	158552-52310	O-RING	1							
110	2	158552-52400	O-RING, 4E S42	1							
111	2	22190-120002	WASHER, SEAL 12	2							
112	2	22190-180002	WASHER, SEAL 18	2							
113	2	22217-140000	WASHER, SPRING 14	1							
114	2	22312-050140	PIN, PARALLEL M5X14	2							
115	2	22351-050010	PIN, SPRING 5.0X10	2							
117	2	24311-000070	O-RING, 1AP7.0	1							
118	2	24356-010180	O-RING, 4D1018	1							
119	2	24356-010200	O-RING, 4D1020	1							
120	2	26106-060102	BOLT, M6X 10 PLATED	1							
122	2	26450-080452	BOLT, M8X 45	4							
123	2	26776-140002	NUT, LOCK M14	1							
125	2	158552-52100	PUMP ASSY, FUEL FEED	1							
126	3	158552-52500	O-RING	1							

N:Old ←Yes/No→ New. Q:Old ←No/Yes→ New. R:Old ←Yes/Yes→ New. S:Old ←No/No→ New. W:Add. Z:Discontinued. F:Interchangeable by set. K:Q'ty Change

++ CONTINUE ++

Copyright (C) YANMAR GLOBAL CS CO., LTD. All RightsReserved.

Fig.11. FUEL INJECTION PUMP

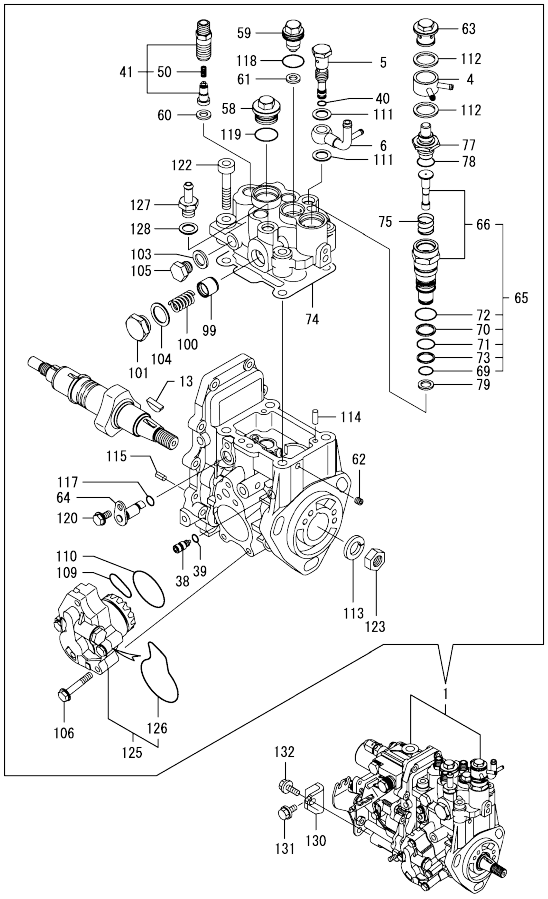

(A)=3TNV82A-BMBB (D)=
(B)= (E)=
(C)= (F)=

No.	Lev.	Parts No.	Description	Q'ty (A)	(B)	(C)	(D)	(E)	(F)	I	R
127	2	119934-59910	JOINT, PIPE	1							
128	2	22190-120002	WASHER, SEAL 12	1							
130	1	119802-51250	RETAINER, PUMP	1							
131	1	26106-080162	BOLT, M8X 16 PLATED	1							
132	1	26106-080202	BOLT, M8X 20 PLATED	1							

N:Old ←Yes/No→ New. Q:Old ←No/Yes→ New. R:Old ←Yes/Yes→ New. S:Old ←No/No→ New. W:Add. Z:Discontinued. F:Interchangeable by set. K:Q'ty Change

Copyright (C) YANMAR GLOBAL CS CO., LTD. All RightsReserved.

Fig.12. GOVERNOR

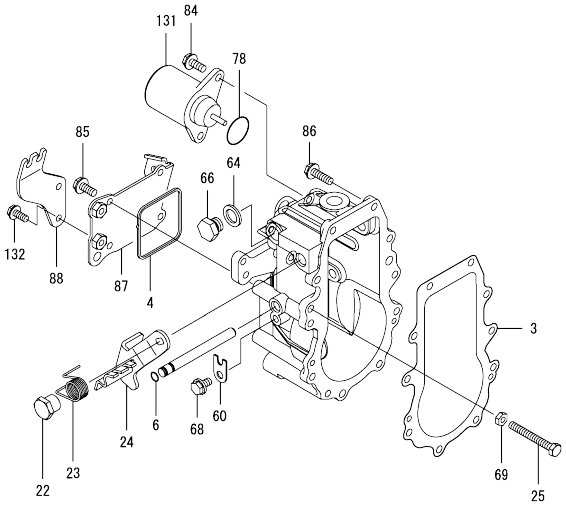

(A)=3TNV82A-BMBB (D)=
(B)= (E)=
(C)= (F)=

No.	Lev.	Parts No.	Description	Q'ty (A)	(B)	(C)	(D)	(E)	(F)	I	R
3	2	158553-61050	GASKET	1							
4	2	158553-61070	GASKET	1							
6	2	129155-51280	O-RING, S6	1							
22	2	129255-61410	NUT, LOCK	1							
23	2	119807-61420	SPRING, RETURN	1							
24	2	119852-61440	LEVER ASSY,REGULATOR	1							
25	2	129155-61460	BOLT, IDLE	1							
60	2	119660-61901	RETAINER, SHAFT	1							
64	2	22190-120002	WASHER, SEAL 12	1							
66	2	23887-120002	PLUG, 12	1							
68	2	26106-060102	BOLT, M6X 10 PLATED	1							
69	2	26756-060002	NUT, LOCK M6	1							
78	2	158552-61900	O-RING	1							
84	2	26106-060142	BOLT, M6X 14 PLATED	2							
85	2	26106-060142	BOLT, M6X 14 PLATED	4							
86	2	26106-060202	BOLT, M6X 20 PLATED	10							
87	2	158552-61061	COVER, GOVERNOR CASE	1							
88	2	119852-61080	SUPPORT, WIRE	1							
131	2	119233-77932	SOLENOID, STOP	1							
132	2	26106-060142	BOLT, M6X 14 PLATED	2							

N:Old ◄Yes/No► New. Q:Old ◄No/Yes► New. R:Old ◄Yes/Yes► New. S:Old ◄No/No► New. W:Add. Z:Discontinued. F:Interchangeable by set. K:Q'ty Change

Copyright (C) YANMAR GLOBAL CS CO., LTD. All RightsReserved.

Fig.13. FUEL INJECTION VALVE

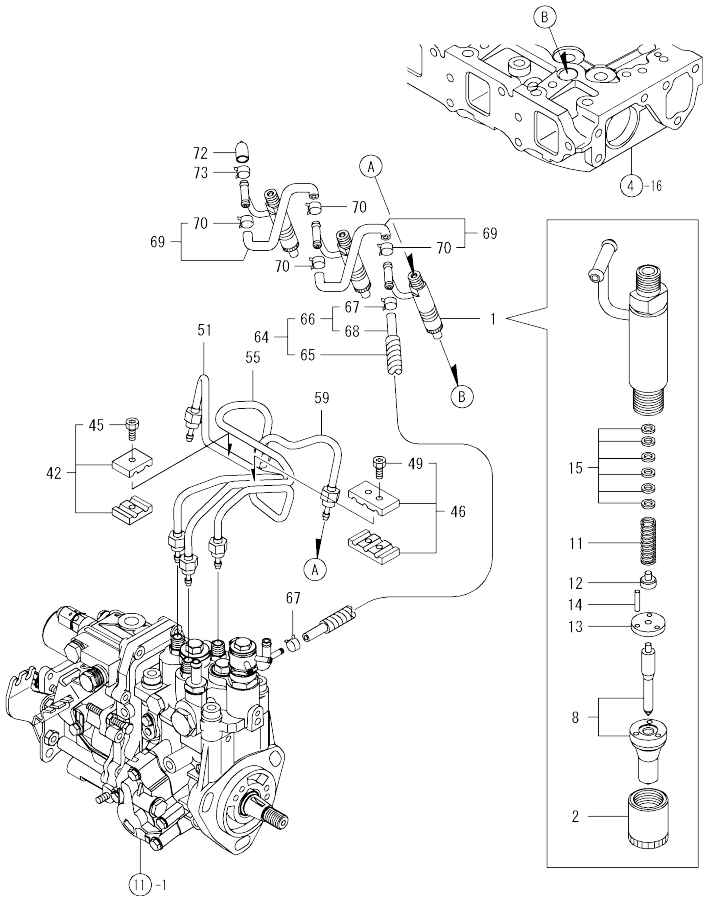

(A)=3TNV82A-BMBB (D)=
(B)= (E)=
(C)= (F)=

No.	Lev.	Parts No.	Description	Q'ty (A)	(B)	(C)	(D)	(E)	(F)	I	R
1	1	719803-53200	VALVE ASSY,INJECTION	3							
1-1	1	719803-53300	VALVE ASSY,INJECTION	3						S	1
	(A=E/#70581)										
2	2	114250-53080	NUT, NOZZLE D16.95	3							
8	2	119803-53100	VALVE ASSY,INJECTION	3							
8-1	2	119803-53300	VALVE ASSY,INJECTION	3						S	
	(A=E/#70581)										
11	2	114250-53120	SPRING, NOZZLE	3							
12	2	114250-53130	SEAT, SPRING	3							
13	2	114250-53140	PLATE	3							
14	2	114250-53210	PIN	6							
15	2	119803-53400	SHIM SET	3							
42	1	119305-59120	RETAINER, PIPE	1							
45	2	129150-59131	BOLT, M4X14	1							
46	1	129150-59120	RETAINER, PIPE	1							
49	2	129150-59131	BOLT, M4X14	2							
51	1	119802-59960	PIPE ASSY, INJECTION	1							
55	1	119802-59970	PIPE ASSY, INJECTION	1							
59	1	119802-59980	PIPE ASSY, INJECTION	1							
64	1	129263-59550	PIPE ASSY, RETURN	1							
65	2	129486-59320	TUBE, CORRUGATED	1							
66	2	119802-59550	PIPE ASSY, RETURN	1							
67	3	124722-59050	CLIP, HOSE 9	2							
68	3	119802-59560	PIPE, FUEL RETURN	1							
69	1	129486-59551	PIPE ASSY, RETURN	2							
70	2	124722-59050	CLIP, HOSE 9	4							
72	1	119593-59581	CAP	1							
73	1	124060-77680	CLIP, HOSE 10	1							

N:Old ←Yes/No→ New. Q:Old ←No/Yes→ New. R:Old ←Yes/Yes→ New. S:Old ←No/No→ New. W:Add. Z:Discontinued. F:Interchangeable by set. K:Q'ty Change

Copyright (C) YANMAR GLOBAL CS CO., LTD. All RightsReserved.

Fig.14. FUEL LINE

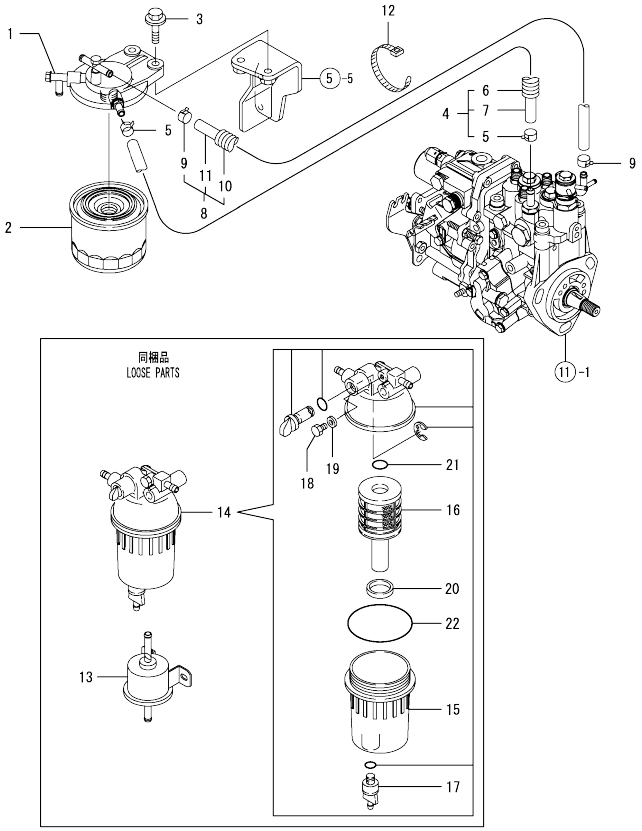

(A)=3TNV82A-BMBB (D)=
(B)= (E)=
(C)= (F)=

No.	Lev.	Parts No.	Description	Q'ty (A)	(B)	(C)	(D)	(E)	(F)	I	R
1	1	129004-55612	BRACKET, FILTER	1							
2	1	119802-55801	FILTER, FUEL	1							
3	1	26106-080302	BOLT, M8X 30 PLATED	2							
4	1	129044-59010	PIPE, D13/7.5X220	1							
5	2	124766-59050	CLIP, HOSE 12	2							
6	2	129044-59100	TUBE, CORRUGATED	1							
7	2	129044-59510	PIPE, FUEL 220	1							
8	1	129630-59010	PIPE ASSY, FUEL	1							
9	2	124766-59050	CLIP, HOSE 12	2							
10	2	129961-59110	TUBE, CORRUGATED	1							
11	2	105025-59560	PIPE, FUEL	1							
12	1	121750-59890	BAND, 140	1							
13	1	119225-52102	PUMP ASSY, FUEL FEED	1							
14	1	129242-55700	SEPARATOR ASSY	1							
15	2	129242-55720	CUP	1							
16	2	129242-55730	ELEMENT	1							
17	2	129242-55740	PLUG, DRAIN	1							
18	2	129242-55750	VALVE, AIR VENT	1							
19	2	129242-55760	GASKET	1							
20	2	129242-55770	FLOAT	1							
21	2	24311-000160	O-RING, 1AP16.0	1							
22	2	24321-000750	O-RING, 1AG75.0	1							

N:Old ←Yes/No→ New. Q:Old ←No/Yes→ New. R:Old ←Yes/Yes→ New. S:Old ←No/No→ New. W:Add. Z:Discontinued. F:Interchangeable by set. K:Q'ty Change

Copyright (C) YANMAR GLOBAL CS CO., LTD. All RightsReserved.

Fig.15. STARTING MOTOR

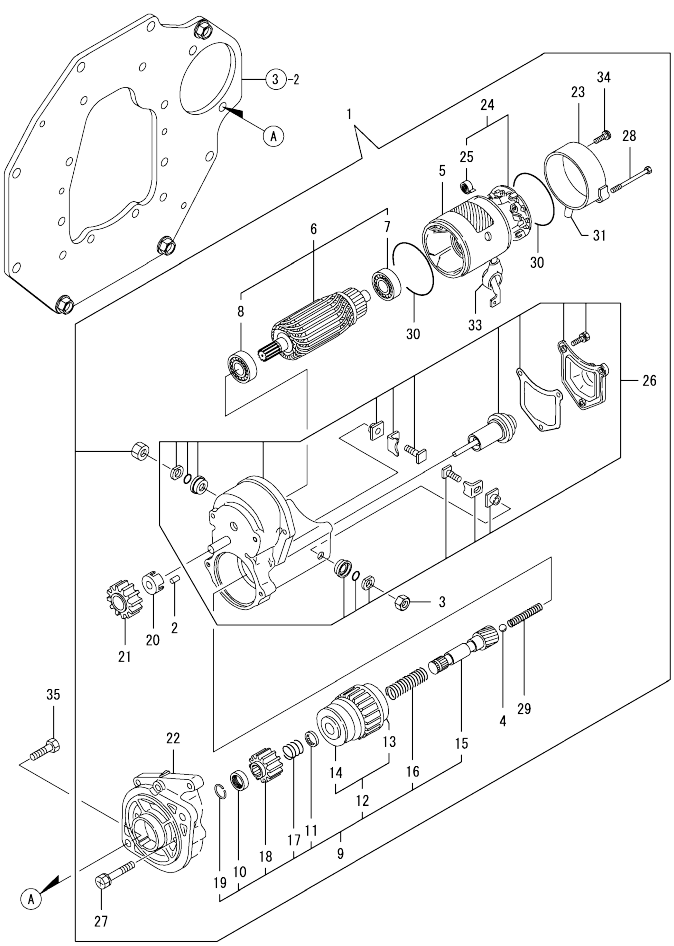

(A)=3TNV82A-BMBB (D)=
(B)= (E)=
(C)= (F)=

No.	Lev.	Parts No.	Description	Q'ty (A)	(B)	(C)	(D)	(E)	(F)	I	R
1	1	129407-77010	STARTER, RA1.4	1							
2	2	X0283060061	ROLLER	5							
3	2	X9490561370	NUT	1							
4	2	X9491200240	BALL	1							
5	2	129407-77210	YOKE ASSY	1							
6	2	129407-77220	ARMATURE ASSY	1							
7	3	129129-77230	BEARING	1							
8	3	129129-77240	BEARING	1							
9	2	129407-77250	STARTER	1							
10	3	X0280210230	NUT	1							
11	3	X0283270140	RETAINER	1							
12	3	129407-77390	CLUTCH ASSY	1							
13	4	129129-77440	BEARING, BALL	1							
14	4	129129-77450	BEARING, BALL	1							
15	3	129129-77400	SHAFT	1							
16	3	129129-77410	SPRING, COIL	1							
17	3	X9491703371	SPRING, COIL	1							
18	3	129129-77420	PINION, STARTER	1							
19	3	129129-77430	RING	1							
20	2	129129-77260	RETAINER	1							
21	2	129129-77270	PINION	1							
22	2	129407-77280	HOUSING	1							
23	2	129407-77290	FRAME	1							
24	2	129407-77300	HOLDER ASSY	1							
25	3	X9491730461	SPRING	4							
26	2	129407-77310	SWITCH ASSY	1							
27	2	129129-77320	BOLT	2							
28	2	129407-77330	BOLT	2							
29	2	129129-77340	SPRING	1							
30	2	129129-77350	O-RING	2							
31	2	129129-77362	COVER	1							
33	2	129129-77380	CAP	1							
34	2	129129-77460	SCREW	2							
35	1	26116-120202	BOLT, M12X 20 PLATED	2							

N:Old ←Yes/No→ New. Q:Old ←No/Yes→ New. R:Old ←Yes/Yes→ New. S:Old ←No/No→ New. W:Add. Z:Discontinued. F:Interchangeable by set. K:Q'ty Change

Copyright (C) YANMAR GLOBAL CS CO., LTD. All RightsReserved.

Fig.16. GENERATOR

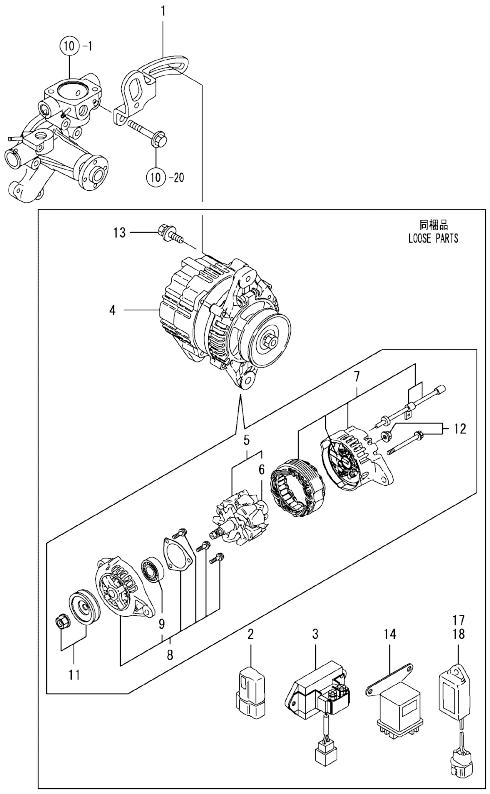

(A)=3TNV82A-BMBB (D)=
(B)= (E)=
(C)= (F)=

No.	Lev.	Parts No.	Description	Q'ty (A)	(B)	(C)	(D)	(E)	(F)	I	R
1	1	119853-77330	ADJUSTER	1							
1-1	1	119960-77310	ADJUSTER, BELT	1						N	
	(A=*2020.11)										
2	1	119643-66900	DIODE	1							
3	1	129136-77200	RELAY, SAFETY	1							
4	1	129612-77290	ALTERNATOR, 12V-80A	1							
5	2	123910-77740	ROTOR ASSY	1							
6	3	129900-77810	BEARING, BALL	1							
7	2	129612-77820	BRACKET ASSY	1							
8	2	129900-77890	BRACKET ASSY	1							
9	3	129900-77900	BEARING, BALL	1							
11	2	129900-77910	PULLEY	1							
12	2	129900-77920	SCREW KIT	1							
13	1	119810-77340	BOLT, ADJUST L=30	1							
14	1	119650-77910	RELAY ASSY, GLOW	1							
17	1	128300-77920	TIMER	1							
18	1	129211-77920	TIMER	1							

Remarks
(1) REPAIR PART.

N:Old $\frac{\text{Yes}}{\text{No}}$ New. Q:Old $\frac{\text{No}}{\text{Yes}}$ New. R:Old $\frac{\text{Yes}}{\text{Yes}}$ New. S:Old $\frac{\text{No}}{\text{No}}$ New. W:Add. Z:Discontinued. F:Interchangeable by set. K:Q'ty Change

Copyright (C) YANMAR GLOBAL CS CO., LTD. All RightsReserved.

Fig.18. (16A)GENERATOR (FROM E69638

(A)=3TNV82A-BMBB
(B)=
(C)=
(D)=
(E)=
(F)=

No.	Lev.	Parts No.	Description	Q'ty (A)	(B)	(C)	(D)	(E)	(F)	I	R
1	1	129795-01900	BOLT, STUD M10X33	1							
2	1	119626-77210	ALTERNATOR, 12V-55A	1							
3	2	X9490561001	NUT	1							
4	2	129052-77380	ROTOR ASSY	1							
5	3	123501-79240	BEARING, BALL	1							
6	3	119620-79250	COVER, BEARING	1							
7	2	129052-77422	FRAME ASSY	1							
8	3	119620-79200	BEARING, BALL	1							
9	3	119620-79210	RETAINER	1							
10	3	119620-79220	SCREW	4							
11	3	119620-79230	BOLT, STUD	2							
12	2	128401-77440	COVER	1							
13	2	119620-77461	PULLEY, GENERATOR	1							
14	2	119620-77471	NUT	1							
15	2	119620-77490	COLLAR	1							
16	2	129423-77710	REGULATOR ASSY	1							
17	2	129052-79260	HOLDER	1							
18	2	129052-79270	HOLDER, BRUSH	1							
19	2	119620-79290	SCREW	6							
20	2	119620-79300	SCREW	1							
21	2	119620-79310	BOLT	3							
22	2	119620-79320	SCREW	2							
23	2	119620-79330	BOLT	2							
24	2	119620-79340	BUSH, INSULATION	1							
25	2	119620-79350	NUT	2							
26	2	119626-77450	FRAME	1							
27	1	26306-100002	NUT, M10	1							
28	1	119853-77330	ADJUSTER	1							
28-1	1	119960-77310	ADJUSTER, BELT	1							N
	(A=*2020.11)										
29	1	119810-77340	BOLT, ADJUST L=30	1							
30	1	119643-66900	DIODE	1							
31	1	119802-77200	RELAY, SAFETY	1							
32	1	119650-77910	RELAY ASSY, GLOW	1							
35	1	128300-77920	TIMER	1							
36	1	129211-77920	TIMER	1							

N:Old ←Yes/No→ New. Q:Old ←No/Yes→ New. R:Old ←Yes/Yes→ New. S:Old ←No/No→ New. W:Add. Z:Discontinued. F:Interchangeable by set. K:Q'ty Change

Copyright (C) YANMAR GLOBAL CS CO., LTD. All RightsReserved.

Fig.17. GASKET SET

(A)=3TNV82A-BMBB
(B)=
(C)=
(D)=
(E)=
(F)=

No.	Lev.	Parts No.	Description	Q'ty (A)	(B)	(C)	(D)	(E)	(F)	I	R
1	1	719802-92680	GASKET SET	1							1
2	2	119812-01330	GASKET, HEAD	1							
3	2	119609-32040	O-RING, P16	2							
4	2	121850-51960	O-RING	1							
5	2	22190-080002	WASHER, SEAL 6	7							
6	2	24311-000320	O-RING, 1AP32.0	2							
7	2	124240-01883	GASKET	2							
8	2	24341-000240	O-RING, 1AS24.0	1							
9	2	22190-220002	WASHER, SEAL 22	1							
10	2	119803-11340	SEAL, VALVE STEM	3							
11	2	124160-11340	SEAL, VALVE STEM	3							
12	2	119802-11870	PROTECTOR, NOZZLE	3							
13	2	119625-11880	SEAT, NOZZLE	3							
14	2	119802-11310	GASKET, BONNET	1							
15	2	24311-000120	O-RING, 1AP12.0	3							
16	2	119810-12112	GASKET, MANIFOLD	1							
17	2	129150-77511	GASKET	1							
18	2	119810-13110	GASKET	1							
19	2	129004-13200	GASKET, SILENCER	2							
20	2	171353-26081	GASKET	1							
21	2	24321-000850	O-RING, 1AG85.0	1							
22	2	129150-32020	GASKET, PUMP	1							
23	2	129150-35042	GASKET	1							
24	2	129150-35111	GASKET	1							
25	2	22190-100002	WASHER, SEAL 10	2							
26	2	129486-42050	GASKET, WATER PUMP	1							
27	2	23414-080000	GASKET, 8X1.0	1							
28	2	129150-49811	GASKET, THERMOSTAT	1							
29	2	129795-49551	GASKET	1							
30	2	124465-44950	GASKET, 16	2							
31	1	129400-92420	HONE	1							1
32	1	977770-1207F	GASKET.LIQUID	1							1

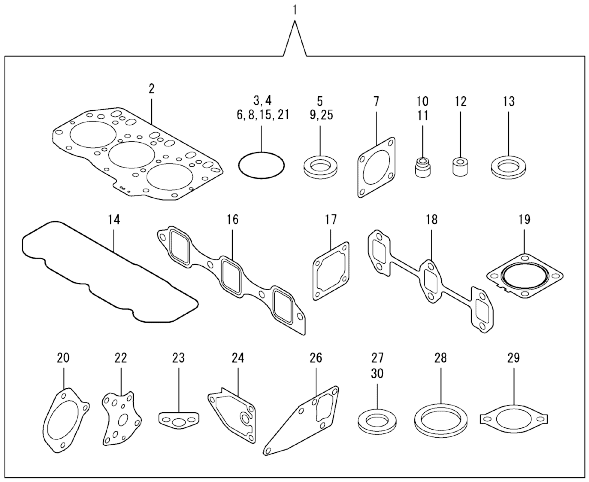

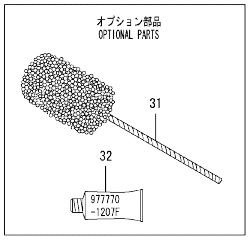

Remarks
(1) REPAIR PART.
(2) UNDER-SIZED(U.S=0.25)PART.
(3) OVER-SIZED(O.S=0.25)PART.

N:Old ←Yes/No→ New. Q:Old ←No/Yes→ New. R:Old ←Yes/Yes→ New. S:Old ←No/No→ New. W:Add. Z:Discontinued. F:Interchangeable by set. K:Q'ty Change

Copyright (C) YANMAR GLOBAL CS CO., LTD. All RightsReserved.

Parts No. Index

Parts No.	Fig. No.	Ref. No.
104211-11180	4	25
104211-11370	4	15
105025-59560	14	11
114250-39450	9	30
114250-53080	13	2
114250-53120	13	11
114250-53130	13	12
114250-53140	13	13
114250-53210	13	14
119131-18320	6	5
119225-52102	14	13
119233-77932	12	131
119256-44760	10	23
119305-59120	13	42
119593-59581	13	72
119609-32040	2	9
	17	3
119620-02020	1	9
119620-77461	18	13
119620-77471	18	14
119620-77490	18	15
119620-79200	18	8
119620-79210	18	9
119620-79220	18	10
119620-79230	18	11
119620-79250	18	6
119620-79290	18	19
119620-79300	18	20
119620-79310	18	21
119620-79320	18	22
119620-79330	18	23
119620-79340	18	24
119620-79350	18	25
119625-11880	4	33
	17	13
119626-77210	18	2
119626-77450	18	26
119640-01640	3	7
119643-66900	16	2
	18	30
119650-77910	16	14
	18	32
119660-61901	12	60
119717-02930	1	15
119802-01561	2	5
119802-03010	4	42
119802-03090	5	1
119802-03110	4	44
119802-03121	4	45
119802-03130	4	46

Parts No.	Fig. No.	Ref. No.
119802-03141	4	47
119802-11100	4	22
119802-11110	4	23
119802-11241	4	4
119802-11251	4	5
119802-11260	4	7
119802-11270	4	8
119802-11280	4	9
119802-11310	4	49
	17	14
119802-11350	4	41
119802-11650	4	11
119802-11810	4	31
119802-11870	4	32
	17	12
119802-11900	4	34
119802-12140	5	4
119802-13130	6	2
119802-13640	6	3
119802-13740	6	4
119802-14580	7	3
119802-22500	8	17
119802-22950	8	34
119802-25071	7	13
119802-25101	7	10
119802-25901	7	16
119802-34812	9	16
119802-35100	9	24
119802-35110	9	25
119802-39450	9	32
119802-42001	10	1
119802-49610	10	35
119802-49620	10	40
119802-49711	10	36
119802-49721	10	41
119802-49730	10	37
119802-51090	11	13
119802-51250	11	130
119802-51560	11	59
119802-51590	11	65
119802-51600	11	66
119802-51680	11	70
119802-51690	11	71
119802-55801	14	2
119802-59320	10	39
119802-59550	13	66
119802-59560	13	68
119802-59960	13	51
119802-59970	13	55
119802-59980	13	59

Parts No.	Fig. No.	Ref. No.
119802-77200	18	31
119803-11340	4	26
	17	10
119803-11700	4	16
119803-11730	4	16 -1
119803-21000	8	1
119803-21200	8	4
119803-22080	8	15
119803-25050	7	9
119803-53100	13	8
119803-53300	13	8 -1
119803-53400	13	15
119803-77821	4	56
119803-77830	4	57
119807-61420	12	23
119810-01200	1	27
119810-01730	3	5
119810-02871	1	32
119810-02941	1	35
119810-11120	4	24
119810-12112	5	3
	17	16
119810-13110	6	1
	17	18
119810-14400	7	2
119810-23200	8	26
119810-23601	8	27
119810-23611	8	30
119810-23910	8	29
119810-35401	9	19
119810-42051	10	3
119810-42120	10	4
119810-42281	10	8
119810-42290	10	9
119810-77340	16	13
	18	29
119812-01330	1	28
	17	2
119813-22300	8	21
119843-01780	3	6
119852-61080	12	88
119852-61440	12	24
119853-77330	16	1
	18	28
119865-21600	8	14
119865-42290	10	43
119923-01611	3	2
119934-01800	2	3
119934-59910	11	127
119953-21580	8	12

Parts No.	Fig. No.	Ref. No.
119953-55610	5	5
119960-77310	16	1 -1
	18	28 -1
120270-54410	4	35
121023-01551	2	22
121023-26070	7	17
121250-44901	10	32
121450-42450	10	31
121520-34810	9	17
121750-59890	14	12
121850-51960	2	10
	17	4
123501-79240	18	5
123910-77740	16	5
124060-01050	1	4
124060-11800	4	30
124060-77680	13	73
124160-01751	2	6
	4	40
124160-01910	1	6
		7
124160-11340	4	27
	17	11
124160-11360	4	52
124160-21501	8	11
124160-39140	9	31
124240-01871	2	7
		19
124240-01883	2	20
		25
	17	7
124465-44950	10	33
		34
	17	30
124722-59050	10	38
		42
	13	67
		70
124766-59050	14	5
		9
128300-77920	16	17
	18	35
128401-77440	18	12
129001-01250	1	5
129001-32001	9	1
129004-13200	6	7
	17	19
129004-13550	6	8
129004-55612	14	1
129005-59830	9	33

Parts No. Index

Parts No.	Fig. No.	Ref. No.
129008-51390	11	41
129008-77800	4	55
129044-59010	14	4
129044-59100	14	6
129044-59510	14	7
129052-77380	18	4
129052-77422	18	7
129052-79260	18	17
129052-79270	18	18
129054-42320	10	11
129100-01580	3	1
		12
	8	2
129100-01640	3	13
129100-35140	9	26
129120-44741	10	22
129129-77230	15	7
129129-77240	15	8
129129-77260	15	20
129129-77270	15	21
129129-77320	15	27
129129-77340	15	29
129129-77350	15	30
129129-77362	15	31
129129-77380	15	33
129129-77400	15	15
129129-77410	15	16
129129-77420	15	18
129129-77430	15	19
129129-77440	15	13
129129-77450	15	14
129129-77460	15	34
129136-77200	16	3
129150-02450	7	4
129150-03070	4	43
129150-11230	4	12
129150-11280	4	10
129150-11750	4	14
129150-14101	7	6
129150-14200	7	1
129150-25301	7	15
129150-32020	9	14
	17	22
129150-35042	9	18
	17	23
129150-35111	9	27
	17	24
129150-35153	9	28
129150-49811	10	26
	17	28

Parts No.	Fig. No.	Ref. No.
129150-59120	13	46
129150-59131	13	45
		49
129150-77511	5	9
	17	17
129155-42350	10	21
129155-49801	10	25
129155-51280	12	6
129155-61460	12	25
129211-77920	16	18
	18	36
129242-55700	14	14
129242-55720	14	15
129242-55730	14	16
129242-55740	14	17
129242-55750	14	18
129242-55760	14	19
129242-55770	14	20
129255-61410	12	22
129263-59550	13	64
129350-49530	10	27
129400-92420	17	31
129407-77010	15	1
129407-77210	15	5
129407-77220	15	6
129407-77250	15	9
129407-77280	15	22
129407-77290	15	23
129407-77300	15	24
129407-77310	15	26
129407-77330	15	28
129407-77390	15	12
129410-03990	5	2
129423-77710	18	16
129484-26200	7	19
129484-26210	7	21
129486-01670	3	16
129486-07901	4	1
129486-12581	5	8
129486-42050	10	16
	17	26
129486-59320	13	65
129486-59551	13	69
129564-21650	8	9
129604-01520	2	4
129612-77290	16	4
129612-77820	16	7
129630-59010	14	8
129792-22400	8	22
129795-01780	3	15

Parts No.	Fig. No.	Ref. No.
129795-01900	18	1
129795-01950	2	8
129795-02412	1	12
129795-21661	8	10
129795-49551	10	28
	17	29
129900-07900	4	2
129900-77810	16	6
129900-77890	16	8
129900-77900	16	9
129900-77910	16	11
129900-77920	16	12
129916-21610	8	8
129961-59110	14	10
158552-51151	7	28
158552-51571	11	60
		61
158552-51580	11	64
158552-51600	11	74
158552-51670	11	6
158552-51781	11	100
158552-52100	11	125
158552-52310	11	109
158552-52400	11	110
158552-52500	11	126
158552-61061	12	87
158552-61900	12	78
158553-51551	11	4
158553-51630	11	75
158553-51650	11	77
158553-51660	11	78
158553-51670	11	69
158553-51680	11	79
158553-51770	11	106
158553-61050	12	3
158553-61070	12	4
158557-51570	11	62
158563-51281	11	39
		40
158563-51330	11	50
158600-51270	11	38
158601-51550	11	58
158601-51570	11	63
158601-51650	11	5
158601-51770	11	99
158601-51790	11	101
171051-01921	1	8
171056-49120	10	30
171353-26081	7	18
	17	20

Parts No.	Fig. No.	Ref. No.
22190-080002	2	11
	9	34
		36
	17	5
22190-100002	9	37
	17	25
22190-120002	11	103
		111
		128
	12	64
22190-180002	11	104
		112
22190-220002	3	9
	17	9
22217-140000	7	29
	11	113
22312-050140	11	114
22351-050010	11	115
22351-060012	4	36
22512-070140	7	7
	8	5
		7
22857-500100	4	50
		51
23414-080000	10	17
	17	27
23857-030000	9	35
23876-030000	10	13
23887-120002	11	105
	12	66
24105-060064	7	24
24311-000070	11	117
24311-000120	4	53
	17	15
24311-000160	14	21
24311-000320	2	12
	4	54
	17	6
24321-000750	14	22
24321-000850	7	25
	17	21
24341-000240	2	23
	17	8
24356-010180	11	118
24356-010200	11	72
		119
24372-000150	11	73
26106-060102	11	120
	12	68
26106-060142	10	14

Parts No. Index

Parts No.	Fig. No.	Ref. No.
26106-060142	12	84
		85
		132
26106-060162	2	24
26106-060202	10	15
	12	86
26106-060602	10	24
26106-080122	10	18
26106-080142	7	8
26106-080162	2	13
		14
		21
	3	10
	4	3
		3 -1
	5	6
	11	131
26106-080202	5	10
	9	29
	11	132
26106-080222	10	29
26106-080252	4	37
	5	7
26106-080302	2	15
	14	3
26106-080352	3	17
	9	23
	10	19
26106-080402	7	14
26106-080452	3	11
	4	38
26106-080502	4	39
26106-080552	2	16
	10	20
26106-080852	2	17
26106-100452	7	26
26116-120202	15	35
26206-100202	3	3
26206-100252	3	4
26306-080002	2	18
	6	6
26306-100002	18	27
26366-060002	9	38
26450-060252	9	15
26450-080282	7	27
26450-080452	11	122
26756-060002	12	69
26776-140002	7	30
	11	123
27241-120000	1	13

Parts No.	Fig. No.	Ref. No.
27241-300000	1	14
27241-400000	4	21
27310-070001	4	28
719802-01560	1	1
719802-92680	17	1
719803-22900	8	32
719803-53200	13	1
719803-53300	13	1 -1
719810-02981	1	29
719810-23100	8	23
719953-51400	11	1
729652-01500	2	1
977770-1207F	17	32
X0280210230	15	10
X0283060061	15	2
X0283270140	15	11
X9490561001	18	3
X9490561370	15	3
X9491200240	15	4
X9491703371	15	17
X9491730461	15	25

Parts No.	Fig. No.	Ref. No.

Parts No.	Fig. No.	Ref. No.