YANMAR

PARTS CATALOG

0CD50-M06140EN

Last update Apr., 2020

PREFACE

This parts catalog is the 1st edition of 3TNV82A-BNNKR Kramer.

Published : April, 2020

Contents

0CD50-M06140

Fig. No.	Fig. Name
ENGINE	
1.	CYLINDER BLOCK
2.	GEAR HOUSING
3.	FLYWHEEL HOUSING & OIL SUMP
4.	CYLINDER HEAD & BONNET
5.	SUCTION MANIFOLD
6.	EXHAUST MANIFOLD
7.	CAMSHAFT & DRIVING GEAR
8.	CRANKSHAFT & PISTON
9.	LUB. OIL SYSTEM
10.	COOLING WATER SYSTEM
11.	FUEL INJECTION PUMP
12.	GOVERNOR
13.	FUEL INJECTION VALVE
14.	FUEL PIPE
15.	STARTER MOTOR
16.	GENERATOR
17.	ACCESSORY

Fig.1. CYLINDER BLOCK

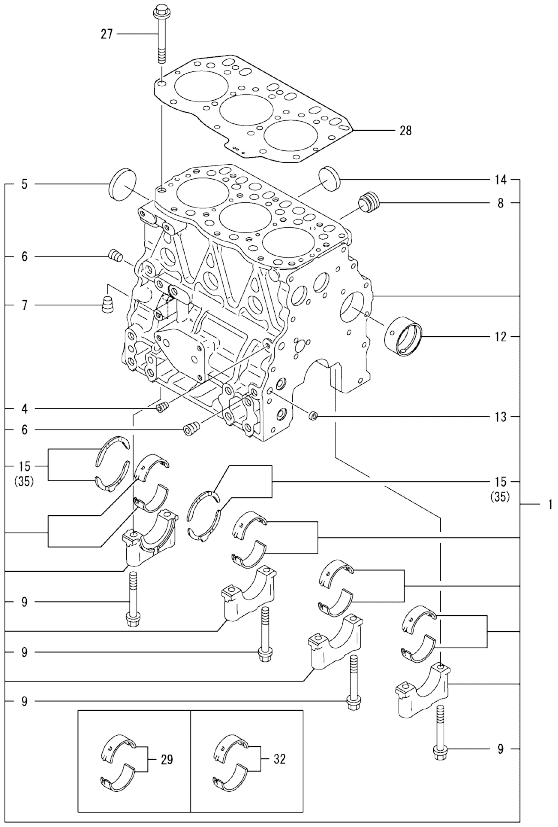

Remarks
(1)Spare parts.
(2)Under-sized(U.S.=0.25) parts.
(3)Over-sized(O.S.=0.25) parts.

(A)=3TNV82A-BNNKR
(B)=
(C)=
(D)=
(E)=
(F)=

No.	Lev.	Parts No.	Description	Q'ty (A)	(B)	(C)	(D)	(E)	(F)	I	R
1	1	719802-01560	BLOCK ASSY, CYLINDER	1							
4	2	124060-01050	PLUG, PT1/8	1							
5	2	129001-01250	PLUG, 50	1							
6	2	124160-01910	PLUG, PT1/4	2							
7	2	124160-01910	PLUG, PT1/4	1							
8	2	171051-01921	PLUG, NPTF1	1							
9	2	119620-02020	BOLT, METAL CAP	8							
12	2	129795-02412	BUSH, CAMSHAFT	1							
13	2	27241-120000	PLUG, 12	2							
14	2	27241-300000	PLUG(30	6							
15	2	119717-02930	METAL ASSY, THRUST	2							
27	1	119810-01200	BOLT, CYLINDER HEAD	14							
28	1	119812-01330	GASKET, HEAD	1							
29	1	719810-02981	METAL ASSY, MAIN	4							1
32	1	119810-02871	METAL ASSY, MAIN .25	4							2
35	1	119810-02941	METAL ASSY, 0.25 OS	2							3

N:Old ◄Yes/No► New. Q:Old ◄No/Yes► New. R:Old ◄Yes/Yes► New. S:Old ◄No/No► New. W:Add. Z:Discontinued. F:Interchangeable by set. K:Q'ty Change

Copyright (C) 2020 YANMAR GLOBAL CS CO., LTD. All RightsReserved.

Fig.2. GEAR HOUSING

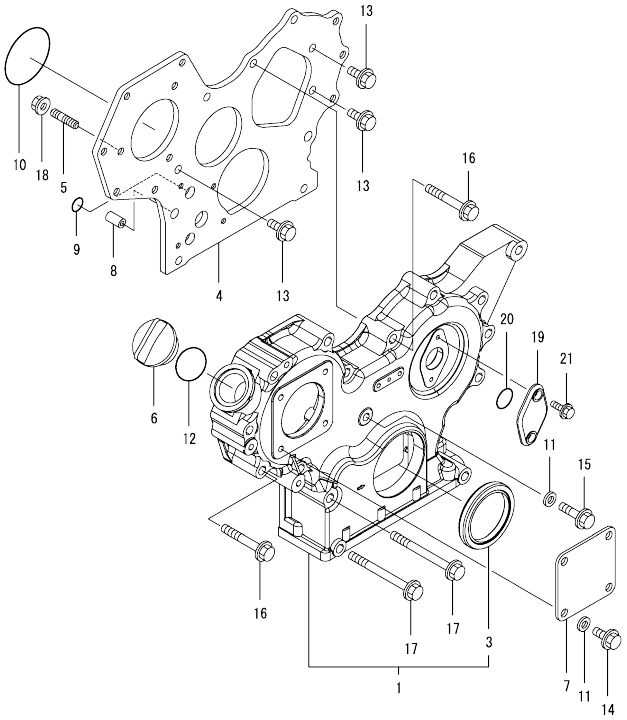

(A)=3TNV82A-BNNKR (D)=
(B)= (E)=
(C)= (F)=

No.	Lev.	Parts No.	Description	Q'ty (A)	(B)	(C)	(D)	(E)	(F)	I	R
1	1	719803-01500	CASE ASSY, GEAR	1							
3	2	119934-01800	SEAL, OIL	1							
4	1	119803-01520	FLANGE, GEAR CASE	1							
5	1	119802-01561	STUD, M8X25	3							
6	1	124160-01751	CAP, FILLER	1							
7	1	124240-01871	COVER,HYDRAULIC PUMP	1							
8	1	129795-01950	PIPE, KNOCK L=18	2							
9	1	119609-32040	O-RING, P16	2							
10	1	121850-51960	O-RING, FUEL PUMP	1							
11	1	22190-080002	WASHER, SEAL 8	5							
12	1	24311-000320	O-RING, 1AP32.0	1							
13	1	26106-080162	BOLT, M8X 16 PLATED	3							
14	1	26106-080162	BOLT, M8X 16 PLATED	4							
15	1	26106-080302	BOLT, M8X 30 PLATED	1							
16	1	26106-080552	BOLT, M8X 55 PLATED	12							
17	1	26106-080852	BOLT, M8X 85 PLATED	3							
18	1	26306-080002	NUT, M8	3							
19	1	121023-01551	COVER, TACHOMETER	1							
20	1	24341-000240	O-RING, 1AS24.0	1							
21	1	26106-060162	BOLT, M6X 16 PLATED	2							

N:Old ◄Yes/No► New. Q:Old ◄No/Yes► New. R:Old ◄Yes/Yes► New. S:Old ◄No/No► New. W:Add. Z:Discontinued. F:Interchangeable by set. K:Q'ty Change

Copyright (C) 2020 YANMAR GLOBAL CS CO., LTD. All RightsReserved.

Fig.3. FLYWHEEL HOUSING & OIL SUMP

(A)=3TNV82A-BNNKR
(B)=
(C)=
(D)=
(E)=
(F)=

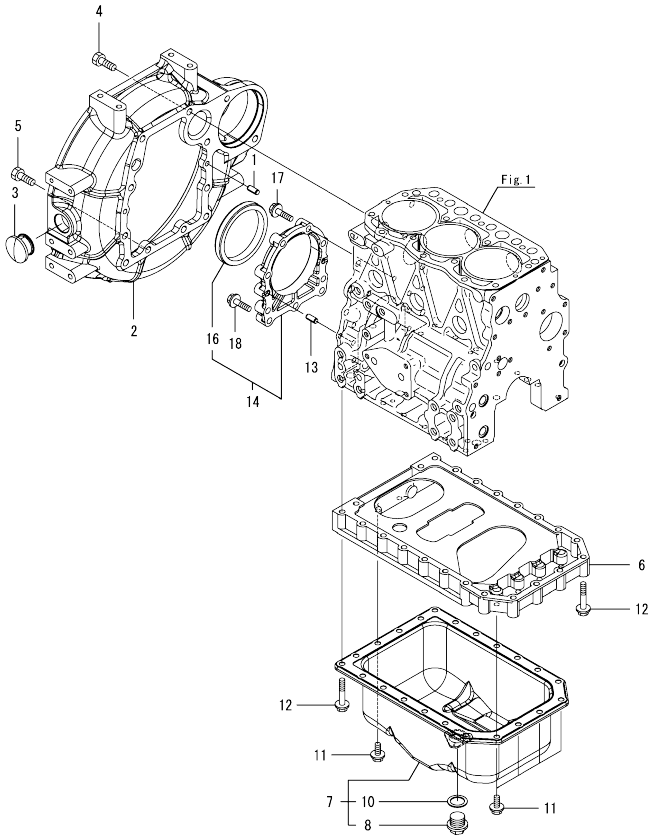

No.	Lev.	Parts No.	Description	Q'ty (A)	(B)	(C)	(D)	(E)	(F)	I	R
1	1	129100-01580	PIN, PARALLEL 8X16	2							
2	1	129612-01600	HOUSING, FLYWHEEL	1							
3	1	119620-01750	CAP, WHEEL COVER	1							
4	1	26206-100252	BOLT, M10X 25 PLATED	6							
5	1	26206-100302	BOLT, M10X 30 PLATED	4							
6	1	119810-01730	SPACER, OIL PAN	1							
7	1	119823-01770	OIL PAN ASSY	1							
8	2	119640-01640	PLUG, DRAIN M22	1							
10	2	22190-220002	WASHER, SEAL 22	1							
11	1	26106-080162	BOLT, M8X 16 PLATED	6							
12	1	26106-080452	BOLT, M8X 45 PLATED	22							
13	1	129100-01580	PIN, PARALLEL 8X16	2							
14	1	129648-01600	CASE ASSY, OIL SEAL	1							
16	2	129648-01780	SEAL, OIL	1							
17	1	129486-01670	BOLT, M8X30	6							
18	1	26106-080352	BOLT, M8X 35 PLATED	3							

N:Old ←Yes/No→ New. Q:Old ←No/Yes→ New. R:Old ←Yes/Yes→ New. S:Old ←No/No→ New. W:Add. Z:Discontinued. F:Interchangeable by set. K:Q'ty Change

Copyright (C) 2020 YANMAR GLOBAL CS CO., LTD. All RightsReserved.

Fig.4. CYLINDER HEAD & BONNET

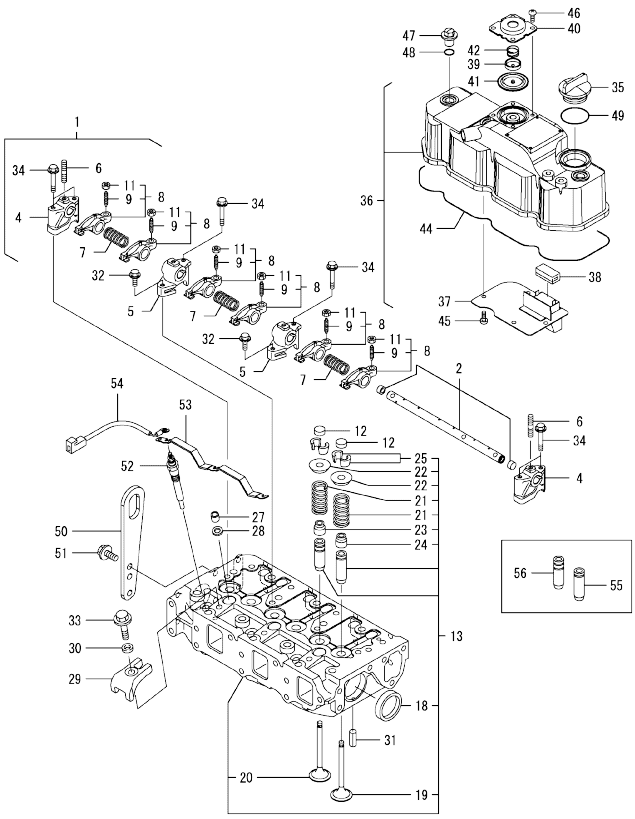

(A)=3TNV82A-BNNKR
(B)=
(C)=
(D)=
(E)=
(F)=

No.	Lev.	Parts No.	Description	Q'ty (A)	(B)	(C)	(D)	(E)	(F)	I	R
1	1	119802-11241	SHAFT ASSY, ARM	1							
2	2	119802-11251	SHAFT, ROCKER ARM	1							
4	2	119802-11260	SUPPORT, ROCKER ARM	2							
5	2	119802-11270	SUPPORT, ROCKER ARM	2							
6	2	119802-11280	BOLT, STUD	3							
7	2	129150-11280	SPRING, SHAFT	3							
8	2	119802-11650	ARM ASSY, ROCKER	6							
9	3	129150-11230	SCREW, VALVE ADJUST	6							
11	3	129150-11750	NUT, M8XP1.0	6							
12	1	104211-11370	CAP, VALVE	6							
13	1	119803-11700	HEAD ASSY, CYLINDER	1							
18	2	27241-400000	PLUG, 40	2							
19	2	119802-11100	VALVE, INTAKE	3							
20	2	119802-11110	VALVE, EXHAUST	3							
21	2	119810-11120	SPRING, VALVE	6							
22	2	104211-11180	RETAINER, SPRING	6							
23	2	119803-11340	SEAL, VALVE STEM	3							
24	2	124160-11340	SEAL, VALVE STEM	3							
25	2	27310-070001	COTTER, 7	6							
27	1	119802-11870	PROTECTOR, NOZZLE	3							
28	1	119625-11880	SEAT, NOZZLE	3							
29	1	119802-11900	RETAINER, NOZZLE	3							
30	1	120270-54410	WASHER, INJECTOR	3							
31	1	22351-060012	PIN, SPRING 6.0X12	2							
32	1	26106-080252	BOLT, M8X 25 PLATED	2							
33	1	26106-080452	BOLT, M8X 45 PLATED	3							
34	1	26106-080502	BOLT, M8X 50 PLATED	6							
35	1	124160-01751	CAP, FILLER	1							
36	1	119802-11350	BONNET ASSY, HEAD	1							
37	2	119802-03010	PLATE, BAFFLE	1							
38	2	129150-03070	BAFFLE, BREATHER	1							
39	2	119802-03110	PLATE, DIAPHRAGM	1							
40	2	119802-03121	COVER, DIAPHRAGM	1							
41	2	119802-03130	DIAPHRAGM, BREATHER	1							
42	2	119802-03141	SPRING, DIAPHRAGM	1							
44	2	119802-11310	GASKET, BONNET	1							
45	2	22857-500100	SCREW, 5X10	4							
46	2	22857-500100	SCREW, 5X10	4							
47	1	124160-11360	KNOB, BONNET	3							
48	1	24311-000120	O-RING, 1AP12.0	3							
49	1	24311-000320	O-RING, 1AP32.0	1							
50	1	129900-07900	LIFTER, ENGINE	1							
51	1	26106-080162	BOLT, M8X 16 PLATED	2							
52	1	129008-77800	PLUG, GLOW	3							
53	1	119803-77821	CONNECTOR, GLOW PLUG	1							
54	1	119803-77830	HARNESS, WIRE	1							
55	1	124060-11800	GUIDE, VALVE	3						1	
56	1	119802-11810	GUIDE, VALVE	3						1	

Remarks
(1)Spare parts.

N:Old ←Yes/No→ New. Q:Old ←No/Yes→ New. R:Old ←Yes/Yes→ New. S:Old ←No/No→ New. W:Add. Z:Discontinued. F:Interchangeable by set. K:Q'ty Change

Copyright (C) 2020 YANMAR GLOBAL CS CO., LTD. All RightsReserved.

Fig.5. SUCTION MANIFOLD

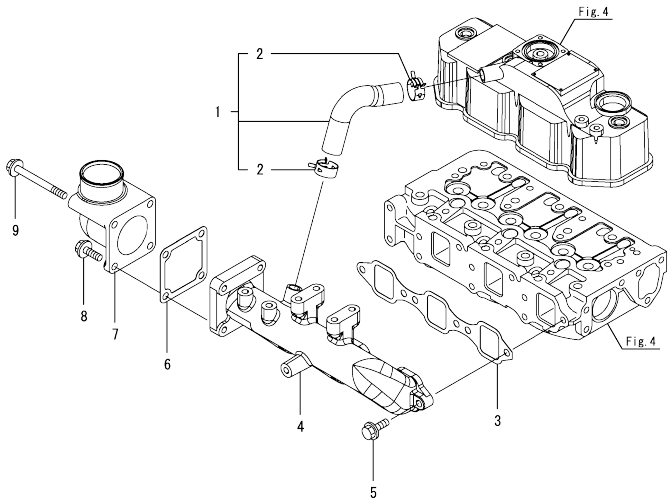

(A)=3TNV82A-BNNKR (D)=
(B)= (E)=
(C)= (F)=

No.	Lev.	Parts No.	Description	Q'ty (A)	(B)	(C)	(D)	(E)	(F)	I	R
1	1	119802-03090	HOSE ASSY, BREATHER	1							
2	2	129410-03990	CLAMP, HOSE 21.5	2							
3	1	119810-12112	GASKET, MANIFOLD	1							
4	1	119802-12130	MANIFOLD, INTAKE	1							
5	1	26106-080252	BOLT, M8X 25 PLATED	4							
6	1	129150-77511	GASKET, AIR HEATER	1							
7	1	119803-77520	BEND, AIR HEATER	1							
8	1	26106-080202	BOLT, M8X 20 PLATED	2							
9	1	26106-080802	BOLT, M8X 80 PLATED	2							

N:Old ←Yes/No→ New. Q:Old ←No/Yes→ New. R:Old ←Yes/Yes→ New. S:Old ←No/No→ New. W:Add. Z:Discontinued. F:Interchangeable by set. K:Q'ty Change

Copyright (C) 2020 YANMAR GLOBAL CS CO., LTD. All RightsReserved.

Fig.6. EXHAUST MANIFOLD

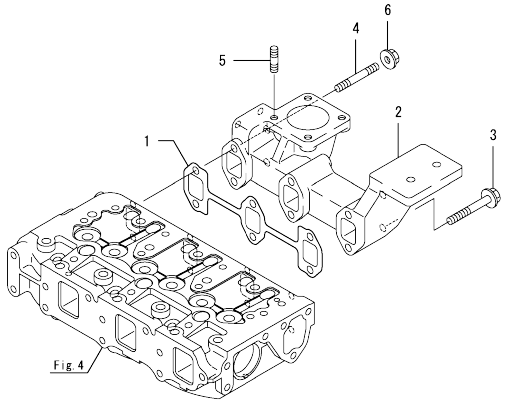

(A)=3TNV82A-BNNKR (D)=
(B)= (E)=
(C)= (F)=

No.	Lev.	Parts No.	Description	Q'ty (A)	(B)	(C)	(D)	(E)	(F)	I	R
1	1	119810-13110	GASKET, MANIFOLD	1							
2	1	119802-13130	MANIFOLD, EXHAUST	1							
3	1	119802-13640	BOLT, M8X60 10.9T	4							
4	1	119802-13740	STUD, M8X60	2							
5	1	119131-18320	STUD, M8X22	4							
6	1	26306-080002	NUT, M8	2							

N:Old ←Yes/No→ New. Q:Old ←No/Yes→ New. R:Old ←Yes/Yes→ New. S:Old ←No/No→ New. W:Add. Z:Discontinued. F:Interchangeable by set. K:Q'ty Change

Copyright (C) 2020 YANMAR GLOBAL CS CO., LTD. All RightsReserved.

Fig.7. CAMSHAFT & DRIVING GEAR

(A)=3TNV82A-BNNKR
(B)=
(C)=
(D)=
(E)=
(F)=

No.	Lev.	Parts No.	Description	Q'ty (A)	(B)	(C)	(D)	(E)	(F)	I	R
1	1	129150-14200	TAPPET	6							
2	1	119810-14400	ROD, PUSH	6							
3	1	119802-14580	CAMSHAFT ASSY	1							
4	2	129150-02450	METAL, THRUST	1							
6	2	129150-14101	GEAR, CAMSHAFT	1							
7	2	22512-070140	KEY, 7X 14	1							
8	1	26106-080142	BOLT, M8X 14 PLATED	2							
9	1	119803-25050	SHAFT, IDLE GEAR	1							
10	1	119802-25101	GEAR ASSY, IDLE	1							
13	1	26106-080402	BOLT, M8X 40 PLATED	3							
14	1	129150-25301	BOLT, INJECTION PUMP	4							
15	1	119802-25901	GEAR, PUMP	1							
16	1	119802-25071	BUSH, IDLE GEAR	1							1
17	1	158552-51151	FLANGE, CAMSHAFT	1							

Remarks
(1)Spare parts.

N:Old ←Yes/No→ New. Q:Old ←No/Yes→ New. R:Old ←Yes/Yes→ New. S:Old ←No/No→ New. W:Add. Z:Discontinued. F:Interchangeable by set. K:Q'ty Change

Copyright (C) 2020 YANMAR GLOBAL CS CO., LTD. All RightsReserved.

Fig.8. CRANKSHAFT & PISTON

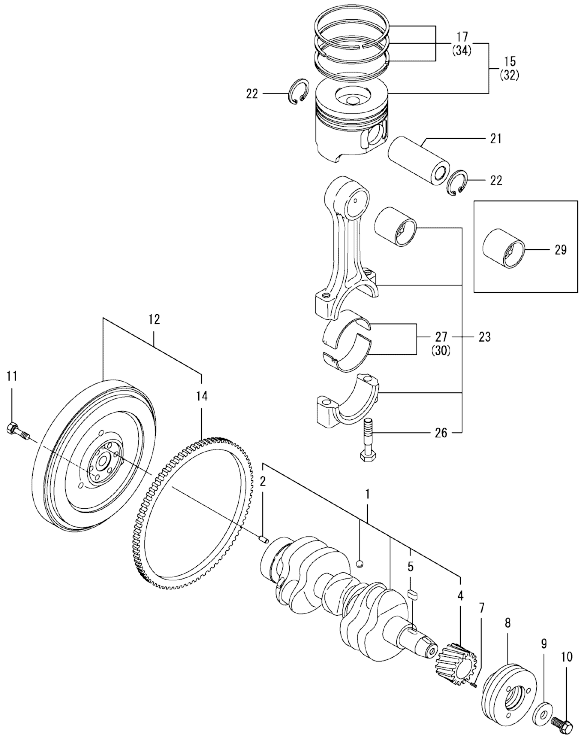

(A)=3TNV82A-BNNKR
(B)=
(C)=
(D)=
(E)=
(F)=

No.	Lev.	Parts No.	Description	Q'ty (A)	(B)	(C)	(D)	(E)	(F)	I	R
1	1	119803-21000	CRANKSHAFT ASSY	1							
2	2	129100-01580	PIN, PARALLEL 8X16	1							
4	2	119803-21200	GEAR, CRANKSHAFT	1							
5	2	22512-070140	KEY, 7X 14	1							
7	1	22351-030010	PIN, SPRING 3.0X10	1							
8	1	119802-21650	V-PULLEY, CRANKSHAFT	1							
9	1	129795-21661	WASHER, 14	1							
10	1	121850-21680	BOLT, V-PULLEY	1							
11	1	121111-21501	BOLT, FLYWHEEL	6							
12	1	129489-21590	FLYWHEEL ASSY	1							
14	2	119865-21600	GEAR, RING Z=116	1							
15	1	119803-22080	PISTON ASSY	3							
17	2	119802-22500	RING SET, PISTON	3							
21	1	119813-22300	PIN, PISTON	3							
22	1	129792-22400	CIRCLIP, 23	6							
23	1	719810-23100	ROD ASSY, CONNECTING	3							
26	2	119810-23200	BOLT, CONNECTING ROD	6							
27	2	119810-23601	METAL ASSY,CRANK PIN	3							
29	1	119810-23910	METAL, PISTON PIN	3							1
30	1	119810-23611	METAL, CRANK PIN .25	3							2
32	1	719803-22900	PISTON ASSY, 0.25 OS	3							3
34	2	119802-22950	RING SET, PISTON .25	3							3

Remarks
(1)Spare parts.
(2)Under-sized(U.S.=0.25) parts.
(3)Over-sized(O.S.=0.25) parts.

N:Old ←Yes/No→ New. Q:Old ←No/Yes→ New. R:Old ←Yes/Yes→ New. S:Old ←No/No→ New. W:Add. Z:Discontinued. F:Interchangeable by set. K:Q'ty Change

Copyright (C) 2020 YANMAR GLOBAL CS CO., LTD. All RightsReserved.

Fig.9. LUB. OIL SYSTEM

(A)=3TNV82A-BNNKR
(B)=
(C)=
(D)=
(E)=
(F)=

No.	Lev.	Parts No.	Description	Q'ty (A)	(B)	(C)	(D)	(E)	(F)	I	R
1	1	129001-32002	PUMP ASSY, OIL	1							
13	1	129150-32020	GASKET, PUMP	1							
14	1	26450-060252	BOLT, M6X 25	4							
15	1	119802-34802	DIPSTICK, OIL	1							
16	1	121520-34810	GUIDE, DIPSTICK	1							
17	1	129150-35042	GASKET, INLET PIPE	1							
18	1	119810-35300	PIPE ASSY, OIL INLET	1							
22	1	26106-080352	BOLT, M8X 35 PLATED	2							
23	1	119802-35100	BRACKET ASSY, FILTER	1							
24	2	119802-35110	BRACKET, FILTER	1							
25	2	129100-35140	STUD	1							
26	1	129150-35111	GASKET, BRACKET	1							
28	1	26106-080202	BOLT, M8X 20 PLATED	3							
29	1	114250-39450	SWITCH, HYDRAULIC	1							
30	1	124160-39140	BOLT, PIPE JOINT M10	1							
31	1	119802-39450	PIPE ASSY, OIL	1							
32	1	129005-59830	BOLT ASSY, JOINT M8	1							
33	2	22190-080002	WASHER, SEAL 8	1							
34	2	23857-030000	BOLT, JOINT 3	1							
35	1	22190-080002	WASHER, SEAL 8	1							
36	1	22190-100002	WASHER, SEAL 10	2							
37	1	26366-060002	NUT, M6	1							
38	1	129150-35153	FILTER ASSY, D80X80L	1							1

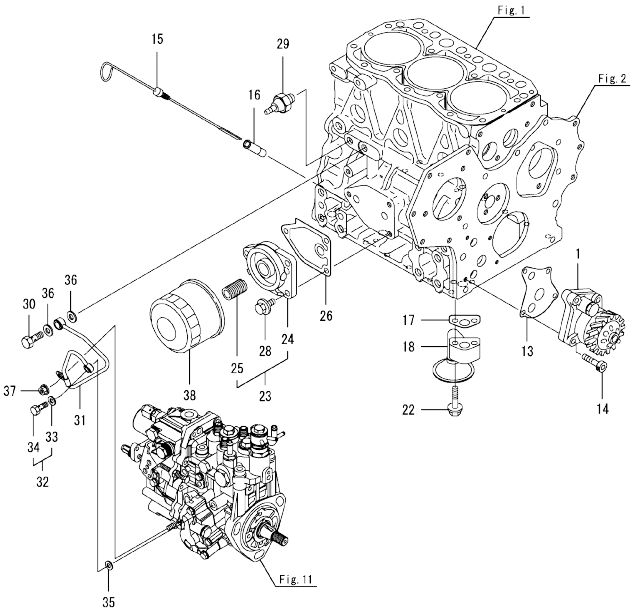

Remarks
(1)Spare parts.

N:Old ←Yes/No→ New. Q:Old ←No/Yes→ New. R:Old ←Yes/Yes→ New. S:Old ←No/No→ New. W:Add. Z:Discontinued. F:Interchangeable by set. K:Q'ty Change

Copyright (C) 2020 YANMAR GLOBAL CS CO., LTD. All RightsReserved.

Fig.10. COOLING WATER SYSTEM

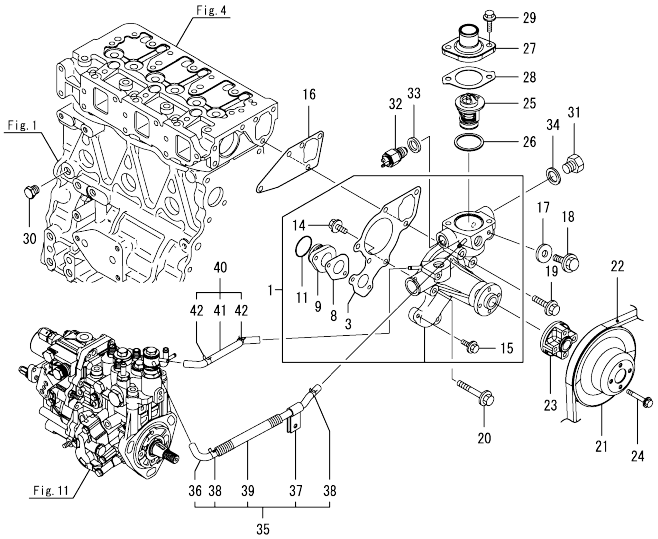

(A)=3TNV82A-BNNKR
(B)=
(C)=
(D)=
(E)=
(F)=

No.	Lev.	Parts No.	Description	Q'ty (A)	(B)	(C)	(D)	(E)	(F)	I	R
1	1	119802-42002	PUMP ASSY, CW	1							
3	2	119810-42051	GASKET, WATER PUMP	1							
8	2	119810-42281	GASKET, WATER PUMP	1							
9	2	119810-42290	PIPE, PUMP	1							
11	2	129054-42320	O-RING	1							
14	2	26106-060142	BOLT, M6X 14 PLATED	2							
15	2	26106-060202	BOLT, M6X 20 PLATED	2							
16	1	129486-42050	GASKET, WATER PUMP	1							
17	1	23414-080000	GASKET, 8X1.0	1							
18	1	26106-080122	BOLT, M8X 12 PLATED	1							
19	1	26106-080352	BOLT, M8X 35 PLATED	1							
20	1	26106-080552	BOLT, M8X 55 PLATED	3							
21	1	129120-42351	V-PULLEY, PUMP	1							
22	1	129612-42370	V-BELT, A39.5	1							
23	1	171353-44760	SPACER, FAN 25MM	1							
24	1	26106-060402	BOLT, M6X 40 PLATED	4							
25	1	129457-49801	THERMOSTAT, 82C	1							
26	1	129150-49811	GASKET, THERMOSTAT	1							
27	1	129350-49530	COVER, THERMOSTAT	1							
28	1	129795-49551	GASKET, COVER	1							
29	1	26106-080222	BOLT, M8X 22 PLATED	2							
30	1	171056-49120	PLUG, DRAIN R1/4	1							
31	1	121450-42450	PLUG, M16	1							
32	1	121250-44901	SWITCH, TEMPERATURE	1							
33	1	124465-44950	GASKET, 16	1							
34	1	124465-44950	GASKET, 16	1							
35	1	119802-49610	HOSE ASSY, WATER A	1							
36	2	119802-49711	HOSE ASSY, WATER A	1							
37	2	119802-49730	RETAINER, PIPE	1							
38	2	124722-59050	CLAMP, HOSE 9	2							
39	2	119802-59320	TUBE, CORRUGATED 10	1							
40	1	119802-49620	HOSE ASSY, WATER B	1							
41	2	119802-49721	HOSE ASSY, WATER B	1							
42	2	124722-59050	CLAMP, HOSE 9	2							

N:Old ←Yes/No→ New. Q:Old ←No/Yes→ New. R:Old ←Yes/Yes→ New. S:Old ←No/No→ New. W:Add. Z:Discontinued. F:Interchangeable by set. K:Q'ty Change

Copyright (C) 2020 YANMAR GLOBAL CS CO., LTD. All RightsReserved.

Fig.11. FUEL INJECTION PUMP

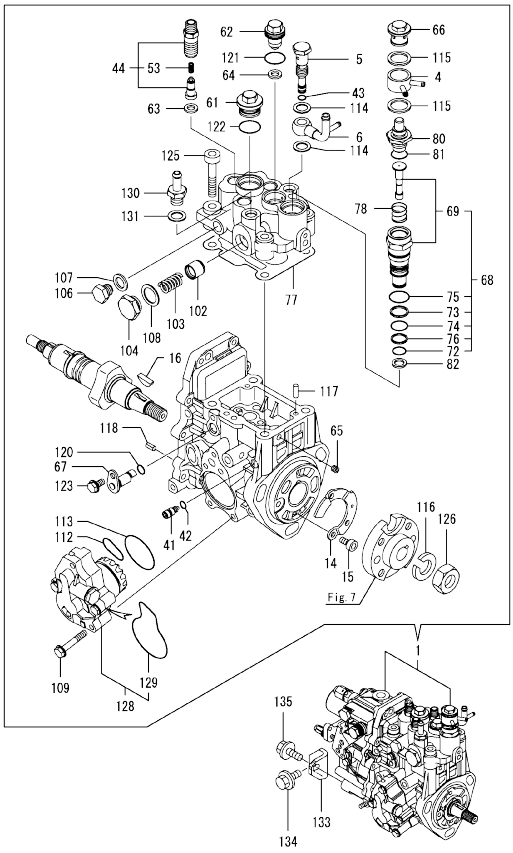

Remarks
(1)Governor(Fig.12) is incorporated in this Fuel Injection Pump(No.1).

(A)=3TNV82A-BNNKR (D)=
(B)= (E)=
(C)= (F)=

No.	Lev.	Parts No.	Description	Q'ty (A)	(B)	(C)	(D)	(E)	(F)	I	R
1	1	719936-51320	FIE ASSY	1							1
4	2	158553-51551	JOINT, COOLING WATER	1							
5	2	158601-51650	JOINT, OVERFLOW	1							
6	2	158552-51670	JOINT, OVERFLOW	1							
14	2	129008-51900	COVER, PUMP	1							
15	2	129008-51920	BOLT, M6X10	2							
16	2	119802-51090	KEY, FEATHER 4X16	1							
41	2	158600-51270	STOPPER, TAPPET	1							
42	2	158563-51281	O-RING, 4D S6	1							
43	2	158563-51281	O-RING, 4D S6	1							
44	2	129008-51390	VALVE ASSY, DELIVERY	3							
53	3	158563-51330	SPRING, DELIVERY	3							
61	2	158601-51550	PLUG, M22	1							
62	2	119802-51560	PLUG, BARREL M14	1							
63	2	158552-51571	GASKET, BARREL PLUG	3							
64	2	158552-51571	GASKET, BARREL PLUG	1							
65	2	158557-51570	PLUG, RACK	1							
66	2	158601-51570	PLUG	1							
67	2	158552-51580	LIFTER, LINK	1							
68	2	119802-51590	TIMER ASSY	1							
69	3	119802-51600	TIMER ASSY	1							
72	3	158553-51670	O-RING, PUMP TIMER	1							
73	3	119802-51680	RING, BACKUP	1							
74	3	119802-51690	O-RING, 1016	1							
75	3	24356-190200	O-RING, 4D19020	1							
76	3	24372-000150	RING, BACK UP T2P15	1							
77	2	158552-51600	GASKET, HEAD	1							
78	2	158553-51630	SPRING, TIMER	1							
80	2	158553-51650	ELEMENT, THERMOSTAT	1							
81	2	158553-51660	O-RING, P14	1							
82	2	158553-51680	GASKET, TIMER	1							
102	2	158601-51770	PISTON, ACCUMLATOR	1							
103	2	158552-51781	SPRING, ACCUMULATOR	1							
104	2	158601-51790	PLUG, ACCUMULATOR	1							
106	2	158553-51930	PLUG, M12	1							
107	2	22190-120002	WASHER, SEAL 12	1							
108	2	22190-180002	WASHER, SEAL 18	1							
109	2	158553-51770	BOLT	4							
112	2	158552-52311	O-RING, FEED PUMP	1							
113	2	158552-52400	O-RING, 4E S42	1							
114	2	22190-120002	WASHER, SEAL 12	2							
115	2	22190-180002	WASHER, SEAL 18	2							
116	2	22217-140000	WASHER, SPRING 14	1							
117	2	22312-050140	PIN, PARALLEL 5X14	2							
118	2	22351-050010	PIN, SPRING 5.0X10	2							
120	2	24311-000070	O-RING, 1AP7.0	1							
121	2	24356-190180	O-RING, 4D19018	1							
122	2	24356-190200	O-RING, 4D19020	1							
123	2	26106-060102	BOLT, M6X 10 PLATED	1							
125	2	26450-080452	BOLT, M8X 45	4							
126	2	26776-140002	NUT, LOCK M14	1							

N:Old ←Yes/No→ New. Q:Old ←No/Yes→ New. R:Old ←Yes/Yes→ New. S:Old ←No/No→ New. W:Add. Z:Discontinued. F:Interchangeable by set. K:Q'ty Change

++ CONTINUE ++

Copyright (C) 2020 YANMAR GLOBAL CS CO., LTD. All RightsReserved.

Fig.11. FUEL INJECTION PUMP

(A)=3TNV82A-BNNKR
(B)=
(C)=
(D)=
(E)=
(F)=

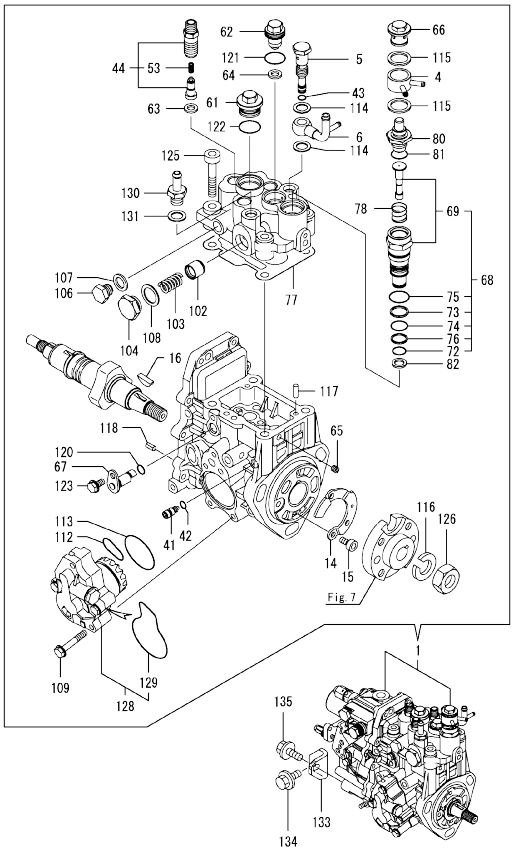

No.	Lev.	Parts No.	Description	Q'ty (A)	(B)	(C)	(D)	(E)	(F)	I	R
128	2	158552-52100	PUMP ASSY, FUEL FEED	1							
129	3	158552-52500	O-RING, PUMP INNER	1							
130	2	119934-59910	JOINT, PIPE	1							
131	2	22190-120002	WASHER, SEAL 12	1							
133	1	119802-51250	RETAINER, FUEL PUMP	1							
134	1	26106-080162	BOLT, M8X 16 PLATED	1							
135	1	26106-080202	BOLT, M8X 20 PLATED	1							

Remarks
(1)Governor(Fig.12) is incorporated in this Fuel Injection Pump(No.1).

N:Old ←Yes/No→ New. Q:Old ←No/Yes→ New, R:Old ←Yes/Yes→ New. S:Old ←No/No→ New. W:Add. Z:Discontinued. F:Interchangeable by set. K:Q'ty Change

Copyright (C) 2020 YANMAR GLOBAL CS CO., LTD. All RightsReserved.

Fig.12. GOVERNOR

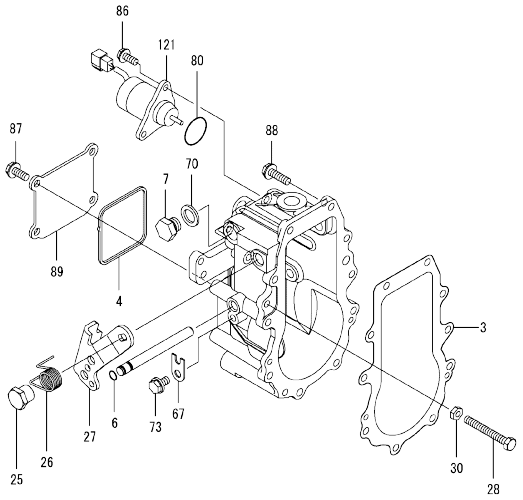

(A)=3TNV82A-BNNKR
(B)=
(C)=
(D)=
(E)=
(F)=

No.	Lev.	Parts No.	Description	Q'ty (A)	(B)	(C)	(D)	(E)	(F)	I	R
3	2	158553-61050	GASKET, CASE	1							
4	2	158553-61070	GASKET, CASE	1							
6	2	129155-51280	O-RING, S6	1							
7	2	158553-51930	PLUG, M12	1							
25	2	129255-61410	NUT, CONTROL LEVER	1							
26	2	119807-61420	SPRING, RETURN	1							
27	2	158552-61441	LEVER, REGULATOR	1							
28	2	129155-61461	BOLT,IDLE LIMIT	1							
30	2	119740-61470	NUT	1							
67	2	119660-61901	STOPPER, SHAFT	1							
70	2	22190-120002	WASHER, SEAL 12	1							
73	2	26106-060102	BOLT, M6X 10 PLATED	1							
80	2	158552-61900	O-RING	1							
86	2	26106-060122	BOLT, M6X 12 PLATED	2							
87	2	26106-060122	BOLT, M6X 12 PLATED	4							
88	2	26106-060202	BOLT, M6X 20 PLATED	10							
89	2	129642-61060	COVER, GOVERNOR CASE	1							
121	2	129630-77900	SOLENOID, STOP	1							

Remarks
* This figure(Governor) is incorporated in the Fuel Injection Pump(Fig.11).

N:Old ◄Yes/No► New. Q:Old ◄No/Yes► New, R:Old ◄Yes/Yes► New, S:Old ◄No/No► New. W:Add. Z:Discontinued. F:Interchangeable by set. K:Q'ty Change

Copyright (C) 2020 YANMAR GLOBAL CS CO., LTD. All RightsReserved.

Fig.13. FUEL INJECTION VALVE

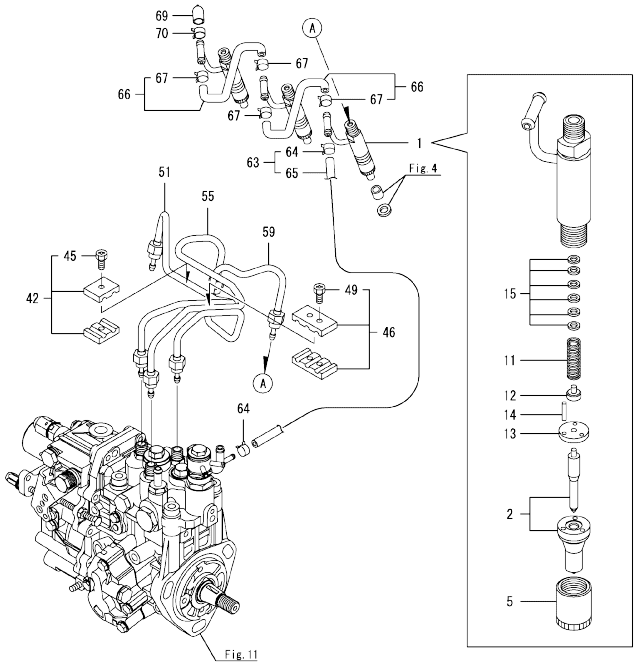

(A)=3TNV82A-BNNKR
(B)=
(C)=
(D)=
(E)=
(F)=

No.	Lev.	Parts No.	Description	Q'ty (A)	(B)	(C)	(D)	(E)	(F)	I	R
1	1	729246-53200	VALVE ASSY,INJECTION	3							
2	2	129246-53001	VALVE ASSY,INJECTION	3							
5	2	114250-53080	NUT, NOZZLE	3							
11	2	114250-53120	SPRING, NOZZLE	3							
12	2	114250-53130	SEAT, SPRING	3							
13	2	114250-53140	SPACER, VALVE STOP	3							
14	2	114250-53210	PIN, POSITIONING	6							
15	2	119803-53400	SHIM SET	3							1
42	1	119305-59120	RETAINER, PIPE	1							
45	2	129150-59131	BOLT, M4X14	1							
46	1	129150-59120	RETAINER, PIPE	1							
49	2	129150-59131	BOLT, M4X14	2							
51	1	119802-59960	PIPE ASSY, INJECTION	1							
55	1	119802-59970	PIPE ASSY, INJECTION	1							
59	1	119802-59980	PIPE ASSY, INJECTION	1							
63	1	119802-59550	HOSE ASSY, RETURN	1							
64	2	124722-59050	CLAMP, HOSE 9	2							
65	2	119802-59560	HOSE, FUEL RETURN	1							
66	1	129486-59551	HOSE ASSY, RETURN	2							
67	2	124722-59050	CLAMP, HOSE 9	4							
69	1	119593-59581	CAP, RETURN PIPE	1							
70	1	124060-77680	CLAMP, HOSE 10	1							

Remarks
(1)Spare parts.

N:Old ←Yes/No→ New. Q:Old ←No/Yes→ New. R:Old ←Yes/Yes→ New. S:Old ←No/No→ New. W:Add. Z:Discontinued. F:Interchangeable by set. K:Q'ty Change

Copyright (C) 2020 YANMAR GLOBAL CS CO., LTD. All RightsReserved.

Fig.14. FUEL PIPE

(A)=3TNV82A-BNNKR
(B)=
(C)=
(D)=
(E)=
(F)=

No.	Lev.	Parts No.	Description	Q'ty (A)	(B)	(C)	(D)	(E)	(F)	I	R
1	1	129004-55612	BRACKET, FILTER	1							
2	1	119802-55801	FILTER, FUEL	1							
3	1	26106-080302	BOLT, M8X 30 PLATED	2							
4	1	129044-59010	HOSE ASSY, D13XL220	1							
5	2	124766-59050	CLAMP, HOSE 11.5	2							
6	2	129044-59100	TUBE, CORRUGATED 15	1							
7	2	129044-59510	HOSE, FUEL L=220	1							
8	1	129630-59010	HOSE ASSY, FUEL	1							
9	2	124766-59050	CLAMP, HOSE 11.5	2							
10	2	129961-59110	TUBE, CORRUGATED 15	1							
11	2	105025-59560	HOSE, FUEL	1							
12	1	121750-59890	BAND, NYLON	1							

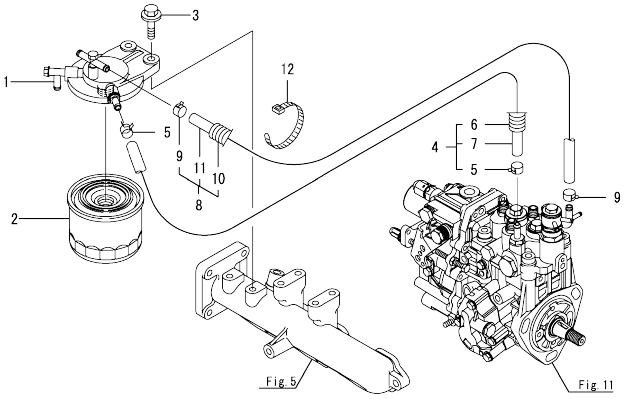

N:Old ←Yes/No→ New. Q:Old ←No/Yes→ New. R:Old ←Yes/Yes→ New. S:Old ←No/No→ New. W:Add. Z:Discontinued. F:Interchangeable by set. K:Q'ty Change

Copyright (C) 2020 YANMAR GLOBAL CS CO., LTD. All RightsReserved.

Fig.15. STARTER MOTOR

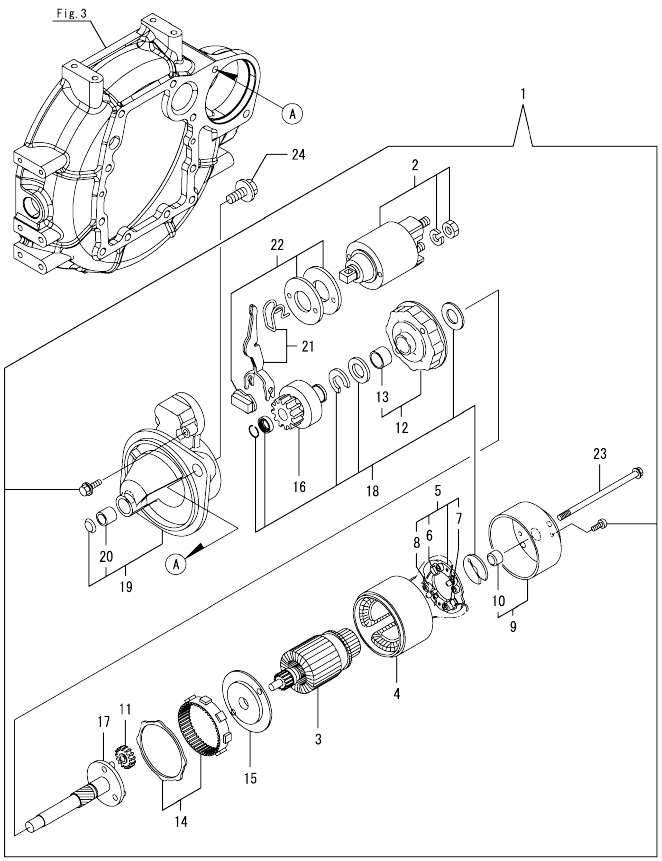

(A)=3TNV82A-BNNKR (D)=
(B)= (E)=
(C)= (F)=

No.	Lev.	Parts No.	Description	Q'ty (A)	(B)	(C)	(D)	(E)	(F)	I	R
1	1	129242-77010	STARTER, 1.7	1							
2	2	129698-77020	SWITCH ASSY, MAGNET	1							
3	2	129242-77100	ARMATURE ASSY	1							
4	2	129242-77110	YOKE ASSY	1							
5	2	129242-77120	HOLDER ASSY, BRUSH	1							
6	3	129242-77130	BRUSH, -	2							
7	3	129242-77140	BRUSH SET	1							
8	3	129242-77150	SPRING, BRUSH	4							
9	2	129242-77160	COVER ASSY, STARTER	1							
10	3	129242-77170	METAL, REAR COVER	1							
11	2	118400-77170	GEAR, PLANETARY	3							
12	2	129242-77180	BRACKET, CENTER P	1							
13	3	129698-77190	BRACKET, CENTER	1							
14	2	129698-77200	GEAR, INTERNAL	1							
15	2	129242-77210	BRACKET, CENTER A	1							
16	2	129698-77220	PINION ASSY	1							
17	2	129698-77230	SHAFT, PINION	1							
18	2	129698-77250	WASHER SET	1							
19	2	129242-77260	CASE ASSY, GEAR	1							
20	3	X2114535200	METAL, STARTER	1							
21	2	129242-77270	LEVER SET, SHIFT	1							
22	2	129242-77280	COVER KIT, DUST	1							
23	2	124195-77770	BOLT, THROUGH	2							
24	1	26106-120252	BOLT, M12X 25 PLATED	2							

N:Old ◄Yes/No► New. Q:Old ◄No/Yes► New. R:Old ◄Yes/Yes► New. S:Old ◄No/No► New. W:Add. Z:Discontinued. F:Interchangeable by set. K:Q'ty Change

Copyright (C) 2020 YANMAR GLOBAL CS CO., LTD. All RightsReserved.

Fig.16. GENERATOR

(A)=3TNV82A-BNNKR (D)=
(B)= (E)=
(C)= (F)=

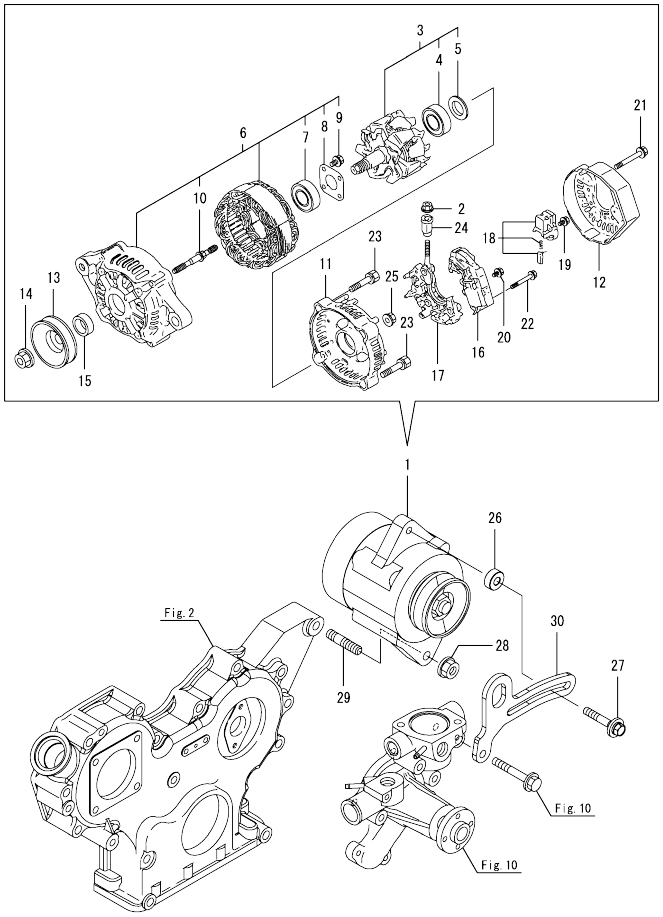

No.	Lev.	Parts No.	Description	Q'ty (A)	(B)	(C)	(D)	(E)	(F)	I	R
1	1	119626-77220	ALTERNATOR, 12V-55A	1							
2	2	129240-79310	NUT	1							
3	2	129052-77380	ROTOR ASSY	1							
4	3	123501-79240	BEARING, BALL	1							
5	3	119620-79250	COVER, BEARING	1							
6	2	129052-77422	FRAME ASSY	1							
7	3	119620-79200	BEARING, BALL	1							
8	3	119620-79210	PLATE, RETAINER	1							
9	3	119620-79220	SCREW	4							
10	3	119620-79230	STUD	2							
11	2	128401-77440	COVER, END	1							
12	2	119626-77450	COVER, END	1							
13	2	119620-77461	PULLEY, GENERATOR	1							
14	2	119620-77471	NUT	1							
15	2	119620-77490	COLLAR	1							
16	2	129423-77730	REGULATOR ASSY	1							
17	2	129052-79260	HOLDER ASSY	1							
18	2	129052-79270	HOLDER ASSY, BRUSH	1							
19	2	119620-79290	SCREW	6							
20	2	119620-79300	SCREW	1							
21	2	119620-79310	BOLT	3							
22	2	119620-79320	SCREW, W/WASHER	2							
23	2	119620-79330	BOLT	2							
24	2	119620-79340	BUSH, INSULATION	1							
25	2	119620-79350	NUT	2							
26	1	119940-77270	SPACER, GENERATOR	1							
27	1	129972-77341	BOLT, ADJUSTER L=50	1							
28	1	26306-100002	NUT, M10	1							
29	1	129795-01900	BOLT, M10X33	1							
30	1	119940-77320	ADJUSTER, BELT	1							

N:Old ←Yes/No→ New. Q:Old ←No/Yes→ New. R:Old ←Yes/Yes→ New. S:Old ←No/No→ New. W:Add. Z:Discontinued. F:Interchangeable by set. K:Q'ty Change

Copyright (C) 2020 YANMAR GLOBAL CS CO., LTD. All RightsReserved.

Fig.17. ACCESSORY

(A)=3TNV82A-BNNKR (D)=
(B)= (E)=
(C)= (F)=

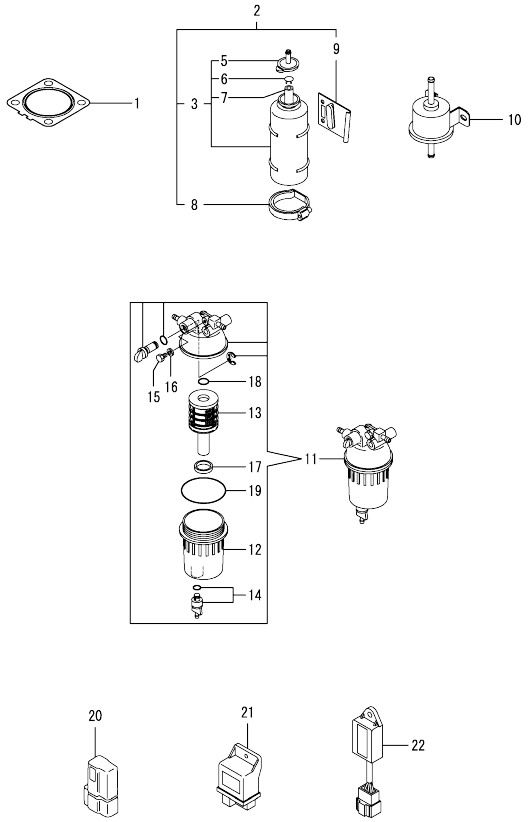

No.	Lev.	Parts No.	Description	Q'ty (A)	(B)	(C)	(D)	(E)	(F)	I	R
1	1	129004-13200	GASKET, SILENCER	1							
2	1	129619-44510	TANK ASSY, SUB	1							
3	2	124450-44510	TANK ASSY, SUB	1							
5	3	124450-44530	CAP, SUB TANK	1							
6	3	124450-44560	CLAMP, PIPE	1							
7	3	23061-070230	PIPE, 7X 230	1							
8	2	124450-44550	BAND, SUB TANK	1							
9	2	121256-44600	BRACKET, SUB TANK	1							
10	1	129612-52100	PUMP, FUEL FEED	1							
11	1	129242-55701	SEPARATOR ASSY,WATER	1							
12	2	129242-55720	CUP, SEPARATOR	1							
13	2	129242-55730	ELEMENT, FUEL FILTER	1							
14	2	129242-55740	PLUG, DRAIN	1							
15	2	129242-55750	VALVE, AIR VENT	1							
16	2	129242-55760	GASKET, PLUG	1							
17	2	129242-55770	FLOAT	1							
18	2	24311-000160	O-RING, 1AP16.0	1							
19	2	24321-000750	O-RING, 1AG75.0	1							
20	1	119643-66900	DIODE	1							
21	1	119802-77200	RELAY, SAFETY	1							
22	1	129211-77920	TIMER, SECTION 1	1							

N:Old ◄Yes/No► New. Q:Old ◄No/Yes► New. R:Old ◄Yes/Yes► New. S:Old ◄No/No► New. W:Add. Z:Discontinued. F:Interchangeable by set. K:Q'ty Change

Copyright (C) 2020 YANMAR GLOBAL CS CO., LTD. All RightsReserved.

Parts No. Index

Parts No.	Fig. No.	Ref. No.
104211-11180	4	22
104211-11370	4	12
105025-59560	14	11
114250-39450	9	29
114250-53080	13	5
114250-53120	13	11
114250-53130	13	12
114250-53140	13	13
114250-53210	13	14
118400-77170	15	11
119131-18320	6	5
119305-59120	13	42
119593-59581	13	69
119609-32040	2	9
119620-01750	3	3
119620-02020	1	9
119620-77461	16	13
119620-77471	16	14
119620-77490	16	15
119620-79200	16	7
119620-79210	16	8
119620-79220	16	9
119620-79230	16	10
119620-79250	16	5
119620-79290	16	19
119620-79300	16	20
119620-79310	16	21
119620-79320	16	22
119620-79330	16	23
119620-79340	16	24
119620-79350	16	25
119625-11880	4	28
119626-77220	16	1
119626-77450	16	12
119640-01640	3	8
119643-66900	17	20
119660-61901	12	67
119717-02930	1	15
119740-61470	12	30
119802-01561	2	5
119802-03010	4	37
119802-03090	5	1
119802-03110	4	39
119802-03121	4	40
119802-03130	4	41
119802-03141	4	42
119802-11100	4	19
119802-11110	4	20
119802-11241	4	1
119802-11251	4	2

Parts No.	Fig. No.	Ref. No.
119802-11260	4	4
119802-11270	4	5
119802-11280	4	6
119802-11310	4	44
119802-11350	4	36
119802-11650	4	8
119802-11810	4	56
119802-11870	4	27
119802-11900	4	29
119802-12130	5	4
119802-13130	6	2
119802-13640	6	3
119802-13740	6	4
119802-14580	7	3
119802-21650	8	8
119802-22500	8	17
119802-22950	8	34
119802-25071	7	16
119802-25101	7	10
119802-25901	7	15
119802-34802	9	15
119802-35100	9	23
119802-35110	9	24
119802-39450	9	31
119802-42002	10	1
119802-49610	10	35
119802-49620	10	40
119802-49711	10	36
119802-49721	10	41
119802-49730	10	37
119802-51090	11	16
119802-51250	11	133
119802-51560	11	62
119802-51590	11	68
119802-51600	11	69
119802-51680	11	73
119802-51690	11	74
119802-55801	14	2
119802-59320	10	39
119802-59550	13	63
119802-59560	13	65
119802-59960	13	51
119802-59970	13	55
119802-59980	13	59
119802-77200	17	21
119803-01520	2	4
119803-11340	4	23
119803-11700	4	13
119803-21000	8	1
119803-21200	8	4

Parts No.	Fig. No.	Ref. No.
119803-22080	8	15
119803-25050	7	9
119803-53400	13	15
119803-77520	5	7
119803-77821	4	53
119803-77830	4	54
119807-61420	12	26
119810-01200	1	27
119810-01730	3	6
119810-02871	1	32
119810-02941	1	35
119810-11120	4	21
119810-12112	5	3
119810-13110	6	1
119810-14400	7	2
119810-23200	8	26
119810-23601	8	27
119810-23611	8	30
119810-23910	8	29
119810-35300	9	18
119810-42051	10	3
119810-42281	10	8
119810-42290	10	9
119812-01330	1	28
119813-22300	8	21
119823-01770	3	7
119865-21600	8	14
119934-01800	2	3
119934-59910	11	130
119940-77270	16	26
119940-77320	16	30
120270-54410	4	30
121023-01551	2	19
121111-21501	8	11
121250-44901	10	32
121256-44600	17	9
121450-42450	10	31
121520-34810	9	16
121750-59890	14	12
121850-21680	8	10
121850-51960	2	10
123501-79240	16	4
124060-01050	1	4
124060-11800	4	55
124060-77680	13	70
124160-01751	2	6
	4	35
124160-01910	1	6
		7
124160-11340	4	24

Parts No.	Fig. No.	Ref. No.
124160-11360	4	47
124160-39140	9	30
124195-77770	15	23
124240-01871	2	7
124450-44510	17	3
124450-44530	17	5
124450-44550	17	8
124450-44560	17	6
124465-44950	10	33
		34
124722-59050	10	38
		42
	13	64
		67
124766-59050	14	5
		9
128401-77440	16	11
129001-01250	1	5
129001-32002	9	1
129004-13200	17	1
129004-55612	14	1
129005-59830	9	32
129008-51390	11	44
129008-51900	11	14
129008-51920	11	15
129008-77800	4	52
129044-59010	14	4
129044-59100	14	6
129044-59510	14	7
129052-77380	16	3
129052-77422	16	6
129052-79260	16	17
129052-79270	16	18
129054-42320	10	11
129100-01580	3	1
		13
	8	2
129100-35140	9	25
129120-42351	10	21
129150-02450	7	4
129150-03070	4	38
129150-11230	4	9
129150-11280	4	7
129150-11750	4	11
129150-14101	7	6
129150-14200	7	1
129150-25301	7	14
129150-32020	9	13
129150-35042	9	17
129150-35111	9	26

Parts No. Index

Parts No.	Fig. No.	Ref. No.
129150-35153	9	38
129150-49811	10	26
129150-59120	13	46
129150-59131	13	45
		49
129150-77511	5	6
129155-51280	12	6
129155-61461	12	28
129211-77920	17	22
129240-79310	16	2
129242-55701	17	11
129242-55720	17	12
129242-55730	17	13
129242-55740	17	14
129242-55750	17	15
129242-55760	17	16
129242-55770	17	17
129242-77010	15	1
129242-77100	15	3
129242-77110	15	4
129242-77120	15	5
129242-77130	15	6
129242-77140	15	7
129242-77150	15	8
129242-77160	15	9
129242-77170	15	10
129242-77180	15	12
129242-77210	15	15
129242-77260	15	19
129242-77270	15	21
129242-77280	15	22
129246-53001	13	2
129255-61410	12	25
129350-49530	10	27
129410-03990	5	2
129423-77730	16	16
129457-49801	10	25
129486-01670	3	17
129486-42050	10	16
129486-59551	13	66
129489-21590	8	12
129612-01600	3	2
129612-42370	10	22
129612-52100	17	10
129619-44510	17	2
129630-59010	14	8
129630-77900	12	121
129642-61060	12	89
129648-01600	3	14
129648-01780	3	16

Parts No.	Fig. No.	Ref. No.
129698-77020	15	2
129698-77190	15	13
129698-77200	15	14
129698-77220	15	16
129698-77230	15	17
129698-77250	15	18
129792-22400	8	22
129795-01900	16	29
129795-01950	2	8
129795-02412	1	12
129795-21661	8	9
129795-49551	10	28
129900-07900	4	50
129961-59110	14	10
129972-77341	16	27
158552-51151	7	17
158552-51571	11	63
		64
158552-51580	11	67
158552-51600	11	77
158552-51670	11	6
158552-51781	11	103
158552-52100	11	128
158552-52311	11	112
158552-52400	11	113
158552-52500	11	129
158552-61441	12	27
158552-61900	12	80
158553-51551	11	4
158553-51630	11	78
158553-51650	11	80
158553-51660	11	81
158553-51670	11	72
158553-51680	11	82
158553-51770	11	109
158553-51930	11	106
	12	7
158553-61050	12	3
158553-61070	12	4
158557-51570	11	65
158563-51281	11	42
		43
158563-51330	11	53
158600-51270	11	41
158601-51550	11	61
158601-51570	11	66
158601-51650	11	5
158601-51770	11	102
158601-51790	11	104
171051-01921	1	8

Parts No.	Fig. No.	Ref. No.
171056-49120	10	30
171353-44760	10	23
22190-080002	2	11
	9	33
		35
22190-100002	9	36
22190-120002	11	107
		114
		131
	12	70
22190-180002	11	108
		115
22190-220002	3	10
22217-140000	11	116
22312-050140	11	117
22351-030010	8	7
22351-050010	11	118
22351-060012	4	31
22512-070140	7	7
	8	5
22857-500100	4	45
		46
23061-070230	17	7
23414-080000	10	17
23857-030000	9	34
24311-000070	11	120
24311-000120	4	48
24311-000160	17	18
24311-000320	2	12
	4	49
24321-000750	17	19
24341-000240	2	20
24356-190180	11	121
24356-190200	11	75
		122
24372-000150	11	76
26106-060102	11	123
	12	73
26106-060122	12	86
		87
26106-060142	10	14
26106-060162	2	21
26106-060202	10	15
	12	88
26106-060402	10	24
26106-080122	10	18
26106-080142	7	8
26106-080162	2	13
		14
	3	11

Parts No.	Fig. No.	Ref. No.
26106-080162	4	51
	11	134
26106-080202	5	8
	9	28
	11	135
26106-080222	10	29
26106-080252	4	32
	5	5
26106-080302	2	15
	14	3
26106-080352	3	18
	9	22
	10	19
26106-080402	7	13
26106-080452	3	12
	4	33
26106-080502	4	34
26106-080552	2	16
	10	20
26106-080802	5	9
26106-080852	2	17
26106-120252	15	24
26206-100252	3	4
26206-100302	3	5
26306-080002	2	18
	6	6
26306-100002	16	28
26366-060002	9	37
26450-060252	9	14
26450-080452	11	125
26776-140002	11	126
27241-120000	1	13
27241-300000	1	14
27241-400000	4	18
27310-070001	4	25
719802-01560	1	1
719803-01500	2	1
719803-22900	8	32
719810-02981	1	29
719810-23100	8	23
719936-51320	11	1
729246-53200	13	1
X2114535200	15	20