YANMAR

PARTS CATALOG

0CD50-M03460EN

Last update Apr., 2018

PREFACE

This parts catalog is the 1st edition of 3TNV82A-BSTB(1) for TAKEUCHI MFG.CO.,LTD.

Published : November, 2017

Contents

0CD50-M03460

Fig. No.	Fig. Name
ENGINE	
1.	CYLINDER BLOCK
2.	GEAR HOUSING
3.	FLYWHEEL HOUSING & OIL SUMP
4.	CYLINDER HEAD & BONNET
5.	SUCTION MANIFOLD
6.	EXHAUST MANIFOLD & SILENCER
7.	CAMSHAFT & DRIVING GEAR
8.	CRANKSHAFT & PISTON
9.	HYDRAULIC PUMP
10.	LUB. OIL SYSTEM
11.	COOLING WATER SYSTEM
12.	FUEL INJECTION PUMP
13.	GOVERNOR
14.	FUEL INJECTION VALVE
15.	FUEL PIPE
16.	STARTER MOTOR
17.	GENERATOR
18.	ACCESSORY
19.	GASKET SET

Fig.1. CYLINDER BLOCK

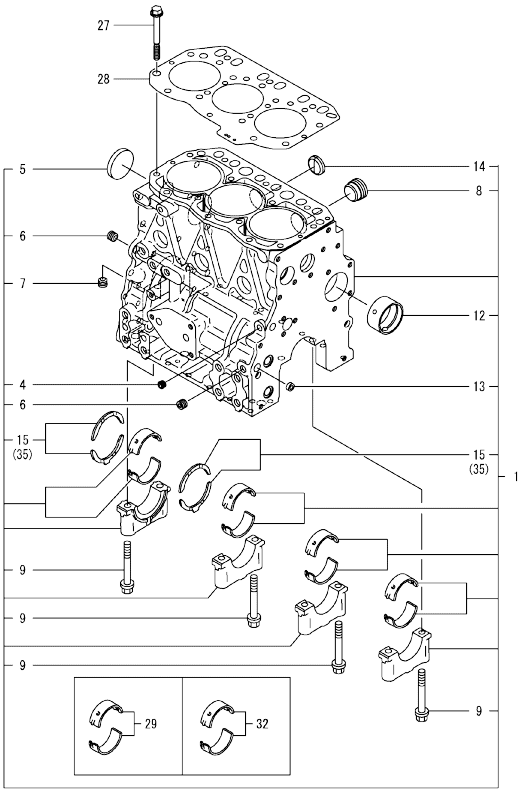

(A)=3TNV82A-BSTB
(B)=3TNV82A-BSTB1
(C)=
(D)=
(E)=
(F)=

No.	Lev.	Parts No.	Description	Q'ty (A)	(B)	(C)	(D)	(E)	(F)	I	R
1	1	719802-01560	BLOCK ASSY, CYLINDER	1	1						
4	2	124060-01050	PLUG, PT1/8	1	1						
5	2	129001-01250	PLUG, DISH TYPE 50	1	1						
6	2	124160-01910	PLUG, PT1/4	2	2						
7	2	124160-01910	PLUG, PT1/4	1	1						
8	2	171051-01921	PLUG, NPTF1	1	1						
9	2	119620-02020	BOLT, METAL CAP	8	8						
12	2	129795-02412	BUSH, CAMSHAFT	1	1						
13	2	27241-120000	PLUG, 12	2	2						
14	2	27241-300000	PLUG 30	6	6						
15	2	119717-02930	BEARING ASSY, THRUST	2	2						
27	1	119810-01200	BOLT, CYLINDER HEAD	14	14						
28	1	119812-01330	GASKET, HEAD	1	1						
29	1	719810-02981	BEARING ASSY, MAIN	4	4						1
32	1	119810-02871	BEARING ASSY, MAIN	4	4						2
35	1	119810-02941	BEARING, THRUST 0.25	2	2						3

Remarks
(1)Spare parts.
(2)Under-sized(U.S.=0.25) parts.
(3)Over-sized(O.S.=0.25) parts.

N:Old ←Yes/No→ New. Q:Old ←No/Yes→ New. R:Old ←Yes/Yes→ New. S:Old ←No/No→ New. W:Add. Z:Discontinued. F:Interchangeable by set. K:Q'ty Change

Copyright (C) 2017 YANMAR CO., LTD. All RightsReserved.

Fig.2. GEAR HOUSING

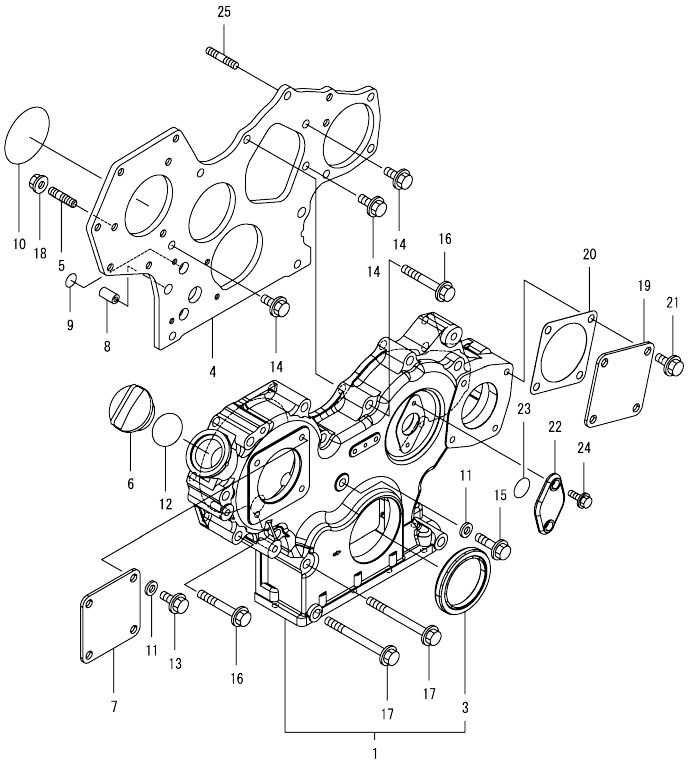

(A)=3TNV82A-BSTB
(B)=3TNV82A-BSTB1
(C)=
(D)=
(E)=
(F)=

No.	Lev.	Parts No.	Description	Q'ty (A)	(B)	(C)	(D)	(E)	(F)	I	R
1	1	119935-01500	CASE ASSY, GEAR	1	1						
3	2	119934-01800	SEAL, OIL	1	1						
4	1	129008-01520	FLANGE, GEAR CASE	1	1						
5	1	119802-01561	BOLT, STUD M8X25	3	3						
6	1	124160-01751	CAP, FILLER	1	1						
7	1	124240-01871	COVER, PUMP	1	1						
8	1	129795-01950	PIPE, DOWEL L=18	2	2						
9	1	119609-32040	O-RING, P16	2	2						
10	1	121850-51960	O-RING	1	1						
11	1	22190-080002	WASHER, SEAL 8	5	5						
12	1	24311-000320	O-RING, 1AP32.0	1	1						
13	1	26106-080162	BOLT, M8X 16 PLATED	4	4						
14	1	26106-080162	BOLT, M8X 16 PLATED	3	3						
15	1	26106-080302	BOLT, M8X 30 PLATED	1	1						
16	1	26106-080552	BOLT, M8X 55 PLATED	10	10						
17	1	26106-080852	BOLT, M8X 85 PLATED	3	3						
18	1	26306-080002	NUT, M8	3	3						
19	1	124240-01871	COVER, PUMP	1	1						
20	1	129C26-01890	GASKET, HO-P	1	1						
21	1	26106-080162	BOLT, M8X 16 PLATED	4	4						
22	1	121023-01551	COVER	1	1						
23	1	24341-000240	O-RING, 1AS24.0	1	1						
24	1	26106-060162	BOLT, M6X 16 PLATED	2	2						
25	1	129150-01580	BOLT, STUD M8X30	1	1						

N:Old ←Yes/No→ New. Q:Old ←No/Yes→ New. R:Old ←Yes/Yes→ New. S:Old ←No/No→ New. W:Add. Z:Discontinued. F:Interchangeable by set. K:Q'ty Change

Copyright (C) 2017 YANMAR CO., LTD. All RightsReserved.

Fig.3. FLYWHEEL HOUSING & OIL SUMP

(A)=3TNV82A-BSTB
(B)=3TNV82A-BSTB1
(C)=
(D)=
(E)=
(F)=

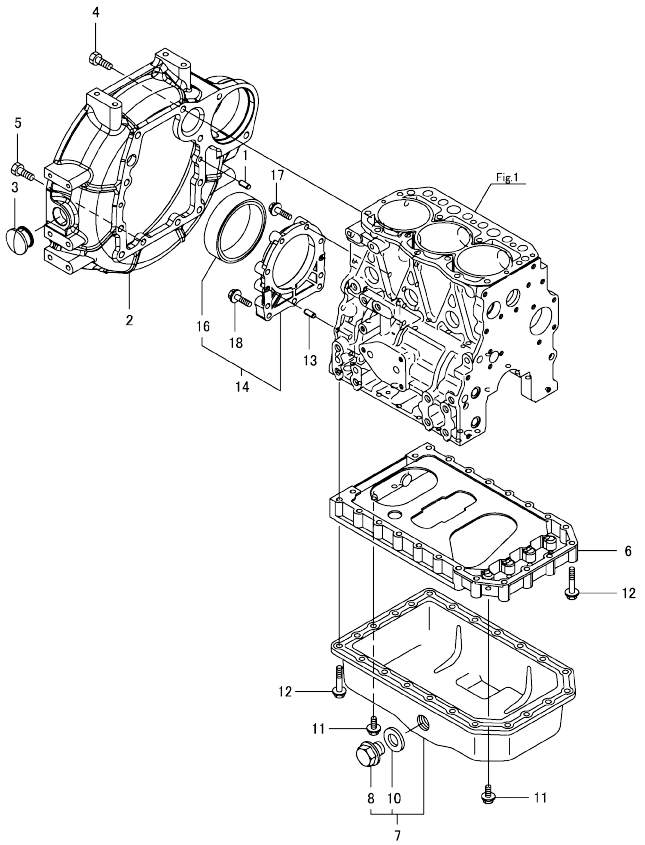

No.	Lev.	Parts No.	Description	Q'ty (A)	(B)	(C)	(D)	(E)	(F)	I	R
1	1	129100-01580	PIN, PARALLEL 8X16	2	2						
2	1	119935-01600	HOUSING, FLYWHEEL	1	1						
3	1	119620-01750	CAP	1	1						
4	1	26206-100252	BOLT, M10X 25 PLATED	6	6						
5	1	26206-100302	BOLT, M10X 30 PLATED	4	4						
6	1	119810-01730	SPACER, OIL-PAN	1	1						
7	1	119843-01780	SUMP ASSY, OIL	1	1						
8	2	119640-01640	PLUG, DRAIN M22	1	1						
10	2	22190-220002	WASHER, SEAL 22	1	1						
11	1	26106-080162	BOLT, M8X 16 PLATED	6	6						
12	1	26106-080452	BOLT, M8X 45 PLATED	22	22						
13	1	129100-01580	PIN, PARALLEL 8X16	2	2						
14	1	129100-01640	CASE ASSY, OIL SEAL	1	1						
16	2	129795-01780	SEAL, OIL	1	1						
17	1	129486-01670	BOLT, M8X30	6	6						
18	1	26106-080352	BOLT, M8X 35 PLATED	3	3						

N:Old ◄Yes/No► New. Q:Old ◄No/Yes► New. R:Old ◄Yes/Yes► New. S:Old ◄No/No► New. W:Add. Z:Discontinued. F:Interchangeable by set. K:Q'ty Change

Copyright (C) 2017 YANMAR CO., LTD. All RightsReserved.

Fig.4. CYLINDER HEAD & BONNET

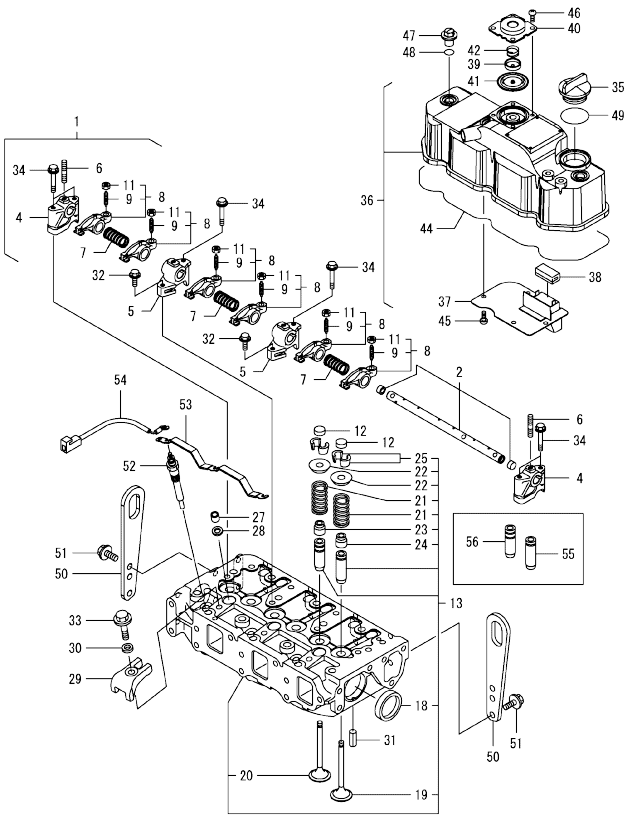

(A)=3TNV82A-BSTB
(B)=3TNV82A-BSTB1
(C)=
(D)=
(E)=
(F)=

No.	Lev.	Parts No.	Description	Q'ty (A)	(B)	(C)	(D)	(E)	(F)	I	R
1	1	119802-11241	SHAFT ASSY, ROCKER	1	1						
2	2	119802-11251	SHAFT, ROCKER ARM	1	1						
4	2	119802-11260	SUPPORT, ROCKER ARM	2	2						
5	2	119802-11270	SUPPORT, ROCKER ARM	2	2						
6	2	119802-11280	BOLT, STUD	3	3						
7	2	129150-11280	SPRING, ROCKER	3	3						
8	2	119802-11650	ARM ASSY, ROCKER	6	6						
9	3	129150-11230	SCREW, VALVE ADJUST	6	6						
11	3	129150-11750	NUT, M8	6	6						
12	1	104211-11370	CAP, VALVE	6	6						
13	1	119803-11700	HEAD ASSY, CYLINDER	1	1						
18	2	27241-400000	PLUG, 40	2	2						
19	2	119802-11100	VALVE, SUCTION	3	3						
20	2	119802-11110	VALVE, EXHAUST	3	3						
21	2	119810-11120	SPRING, VALVE	6	6						
22	2	104211-11180	RETAINER, SPRING	6	6						
23	2	119803-11340	SEAL, VALVE STEM	3	3						
24	2	124160-11340	SEAL, VALVE STEM	3	3						
25	2	27310-070001	COTTER, 7	6	6						
27	1	119802-11870	PROTECTOR, NOZZLE	3	3						
28	1	119625-11880	SEAT, NOZZLE	3	3						
29	1	119802-11900	RETAINER, NOZZLE	3	3						
30	1	120270-54410	WASHER, INJECTOR	3	3						
31	1	22351-060012	PIN, SPRING 6.0X12	2	2						
32	1	26106-080252	BOLT, M8X 25 PLATED	2	2						
33	1	26106-080452	BOLT, M8X 45 PLATED	3	3						
34	1	26106-080502	BOLT, M8X 50 PLATED	6	6						
35	1	124160-01751	CAP, FILLER	1	1						
36	1	119802-11350	BONNET ASSY, HEAD	1	1						
37	2	119802-03010	PLATE, BAFFLE	1	1						
38	2	129150-03070	BAFFLE, BREATHER	1	1						
39	2	119802-03110	PLATE, DIAPHRAGM	1	1						
40	2	119802-03121	COVER, DIAPHRAGM	1	1						
41	2	119802-03130	DIAPHRAGM	1	1						
42	2	119802-03141	SPRING, DIAPHRAGM	1	1						
44	2	119802-11310	GASKET, BONNET	1	1						
45	2	22857-500100	SCREW, 5X10	4	4						
46	2	22857-500100	SCREW, 5X10	4	4						
47	1	124160-11360	KNOB	3	3						
48	1	24311-000120	O-RING, 1AP12.0	3	3						
49	1	24311-000320	O-RING, 1AP32.0	1	1						
50	1	129900-07900	LIFTER, ENGINE	2	2						
51	1	26106-080162	BOLT, M8X 16 PLATED	4	4						
52	1	129008-77800	PLUG, GLOW	3	3						
53	1	119803-77821	CONNECTOR, GLOW PLUG	1	1						
54	1	119803-77830	HARNESS, WIRE	1	1						
55	1	124060-11800	GUIDE, INTAKE VALVE	3	3						1
56	1	119802-11810	GUIDE, VALVE	3	3						1

Remarks
(1)Spare parts.

N:Old ←Yes/No→ New. Q:Old ←No/Yes→ New. R:Old ←Yes/Yes→ New. S:Old ←No/No→ New. W:Add. Z:Discontinued. F:Interchangeable by set. K:Q'ty Change

Copyright (C) 2017 YANMAR CO., LTD. All RightsReserved.

Fig.5. SUCTION MANIFOLD

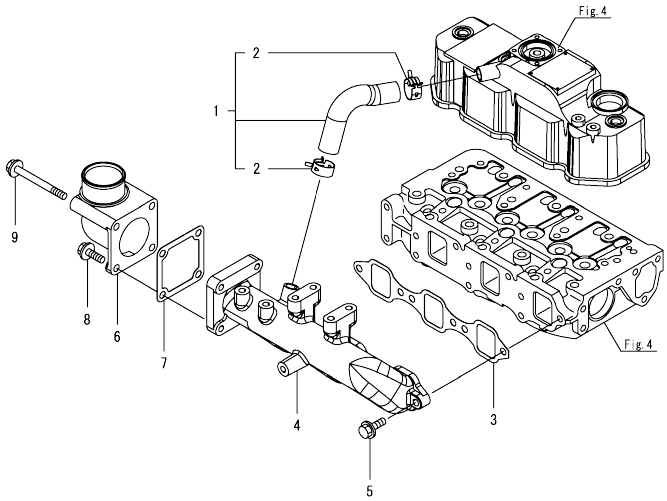

(A)=3TNV82A-BSTB
(B)=3TNV82A-BSTB1
(C)=
(D)=
(E)=
(F)=

No.	Lev.	Parts No.	Description	Q'ty (A)	(B)	(C)	(D)	(E)	(F)	I	R
1	1	119802-03090	HOSE ASSY, BREATHER	1	1						
2	2	129410-03990	CLAMP, HOSE 21.5	2	2						
3	1	119810-12112	GASKET, MANIFOLD	1	1						
4	1	119802-12130	MANIFOLD, AIR INTAKE	1	1						
5	1	26106-080252	BOLT, M8X 25 PLATED	4	4						
6	1	119803-77520	BEND, AIR HEATER	1	1						
7	1	129150-77511	GASKET, AIR HEATER	1	1						
8	1	26106-080202	BOLT, M8X 20 PLATED	2	2						
9	1	26106-080802	BOLT, M8X 80 PLATED	2	2						

N:Old ←Yes/No→ New. Q:Old ←No/Yes→ New. R:Old ←Yes/Yes→ New. S:Old ←No/No→ New. W:Add. Z:Discontinued. F:Interchangeable by set. K:Q'ty Change

Copyright (C) 2017 YANMAR CO., LTD. All RightsReserved.

Fig.6. EXHAUST MANIFOLD & SILENCER

(A)=3TNV82A-BSTB
(B)=3TNV82A-BSTB1
(C)=
(D)=
(E)=
(F)=

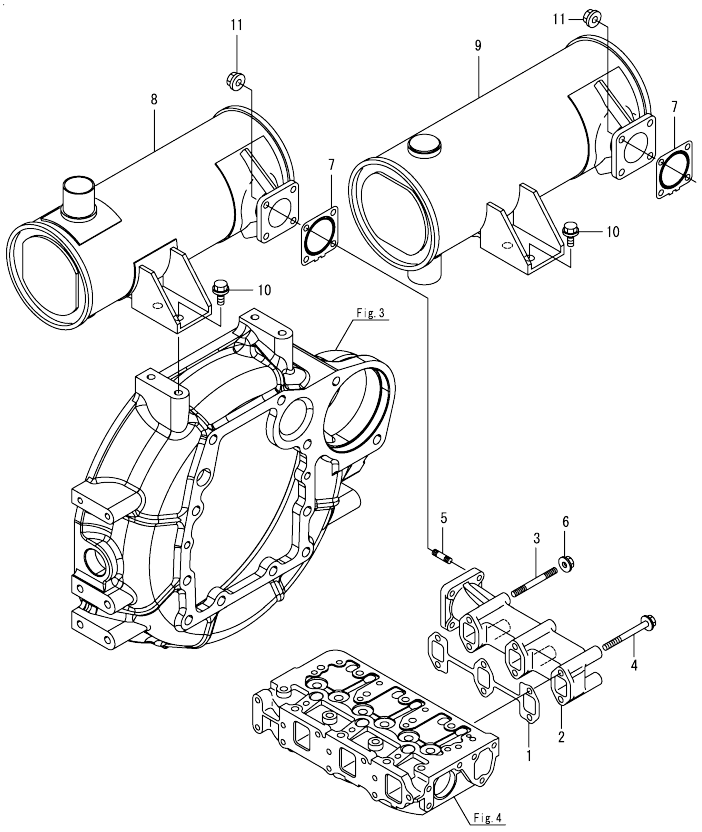

No.	Lev.	Parts No.	Description	Q'ty (A)	(B)	(C)	(D)	(E)	(F)	I	R
1	1	119810-13110	GASKET, EXH.MANIFOLD	1	1						
2	1	119802-13129	MANIFOLD, EXHAUST	1	1						
3	1	123900-13610	BOLT, STUD M8X80	2	2						
4	1	129E00-13640	BOLT, M8X80 10.9T	4	4						
5	1	119131-18320	BOLT, STUD M8X22	4	4						
6	1	26306-080002	NUT, M8	2	2						
7	1	129004-13200	GASKET, SILENCER	1	1						
8	1	129242-13510	SILENCER	1							
9	1	129240-13550	SILENCER		1						
10	1	26106-100162	BOLT, M10X 16 PLATED	2	2						
11	1	26306-080002	NUT, M8	4	4						

N:Old ◄Yes/No► New. Q:Old ◄No/Yes► New. R:Old ◄Yes/Yes► New. S:Old ◄No/No► New. W:Add. Z:Discontinued. F:Interchangeable by set. K:Q'ty Change

Copyright (C) 2017 YANMAR CO., LTD. All RightsReserved.

Fig.7. CAMSHAFT & DRIVING GEAR

(A)=3TNV82A-BSTB
(B)=3TNV82A-BSTB1
(C)=
(D)=
(E)=
(F)=

No.	Lev.	Parts No.	Description	Q'ty (A)	(B)	(C)	(D)	(E)	(F)	I	R
1	1	129150-14200	TAPPET	6	6						
2	1	119810-14400	PUSH-ROD	6	6						
3	1	119802-14580	CAMSHAFT ASSY	1	1						
4	2	129150-02450	BEARING, THRUST	1	1						
6	2	129150-14101	GEAR, CAMSHAFT	1	1						
7	2	22512-070140	KEY, 7X 14	1	1						
8	1	26106-080142	BOLT, M8X 14 PLATED	2	2						
9	1	119803-25050	SHAFT, IDLE	1	1						
10	1	119802-25101	GEAR ASSY, IDLE	1	1						
13	1	26106-080402	BOLT, M8X 40 PLATED	3	3						
14	1	129150-25301	BOLT	4	4						
15	1	119802-25901	GEAR, PUMP	1	1						
16	1	119802-25071	BUSH, IDLE GEAR	1	1						1
17	1	158552-51151	FLANGE	1	1						

Remarks
(1)Spare parts.

N:Old ←Yes/No→ New. Q:Old ←No/Yes→ New. R:Old ←Yes/Yes→ New. S:Old ←No/No→ New. W:Add. Z:Discontinued. F:Interchangeable by set. K:Q'ty Change

Copyright (C) 2017 YANMAR CO., LTD. All RightsReserved.

Fig.8. CRANKSHAFT & PISTON

(A)=3TNV82A-BSTB
(B)=3TNV82A-BSTB1
(C)=
(D)=
(E)=
(F)=

No.	Lev.	Parts No.	Description	Q'ty (A)	(B)	(C)	(D)	(E)	(F)	I	R
1	1	119803-21000	CRANKSHAFT ASSY	1	1						
2	2	129100-01580	PIN, PARALLEL 8X16	1	1						
4	2	119803-21200	GEAR, CRANKSHAFT	1	1						
5	2	22512-070140	KEY, 7X 14	1	1						
7	1	22351-030010	PIN, SPRING 3.0X10	1	1						
8	1	119935-21650	V-PULLEY, CRANKSHAFT	1	1						
9	1	129795-21661	WASHER	1	1						
10	1	121850-21680	BOLT	1	1						
11	1	121111-21501	BOLT, FLYWHEEL	6	6						
12	1	129489-21590	FLYWHEEL ASSY	1	1						
14	2	119865-21600	GEAR, RING Z=116	1	1						
15	1	119803-22080	PISTON ASSY	3	3						
17	2	119802-22500	RING SET, PISTON	3	3						
21	1	119813-22300	PIN, PISTON	3	3						
22	1	129792-22400	CIRCLIP, 23	6	6						
23	1	719810-23100	ROD ASSY, CONNECTING	3	3						
26	2	119810-23200	BOLT, CONNECTING ROD	6	6						
27	2	119810-23601	BEARING, CRANK PIN	3	3						
29	1	119810-23910	BEARING, PISTON PIN	3	3						1
30	1	119810-23611	BEARING, 0.25 US	3	3						2
32	1	719803-22900	PISTON ASSY, 0.25 OS	3	3						3
34	2	119802-22950	RING SET, 0.25 OS	3	3						3

Remarks
(1)Spare parts.
(2)Under-sized(U.S.=0.25) parts.
(3)Over-sized(O.S.=0.25) parts.

N:Old $\frac{\text{Yes}}{\text{No}}$ New. Q:Old $\frac{\text{No}}{\text{Yes}}$ New. R:Old $\frac{\text{Yes}}{\text{Yes}}$ New. S:Old $\frac{\text{No}}{\text{No}}$ New. W:Add. Z:Discontinued. F:Interchangeable by set. K:Q'ty Change

Copyright (C) 2017 YANMAR CO., LTD. All RightsReserved.

Fig.9. HYDRAULIC PUMP

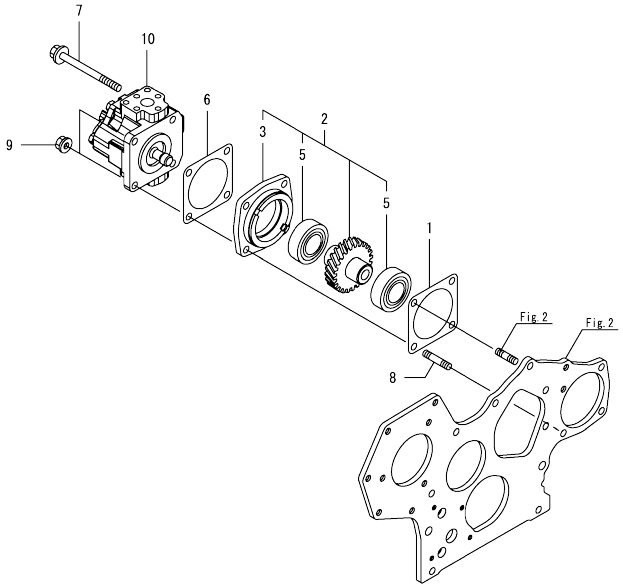

(A)=3TNV82A-BSTB
(B)=3TNV82A-BSTB1
(C)=
(D)=
(E)=
(F)=

No.	Lev.	Parts No.	Description	Q'ty (A)	(B)	(C)	(D)	(E)	(F)	I	R
1	1	129150-01881	GASKET	1	1						
2	1	129150-26000	DRIVE ASSY, PUMP	1	1						
3	2	129150-26050	BRACKET, PUMP	1	1						
5	2	24105-060064	BEARING, BALL 6006Z	2	2						
6	1	129C26-01890	GASKET, HO-P	1	1						
7	1	26106-080952	BOLT, M8X 95 PLATED	2	2						
8	1	26216-080402	STUD, M8X 40	1	1						
9	1	26306-080002	NUT, M8	2	2						
10	1	119641-26020	PUMP, HYDRAULIC	1	1						

N:Old ←Yes/No→ New. Q:Old ←No/Yes→ New. R:Old ←Yes/Yes→ New. S:Old ←No/No→ New. W:Add. Z:Discontinued. F:Interchangeable by set. K:Q'ty Change

Copyright (C) 2017 YANMAR CO., LTD. All RightsReserved.

Fig.10. LUB. OIL SYSTEM

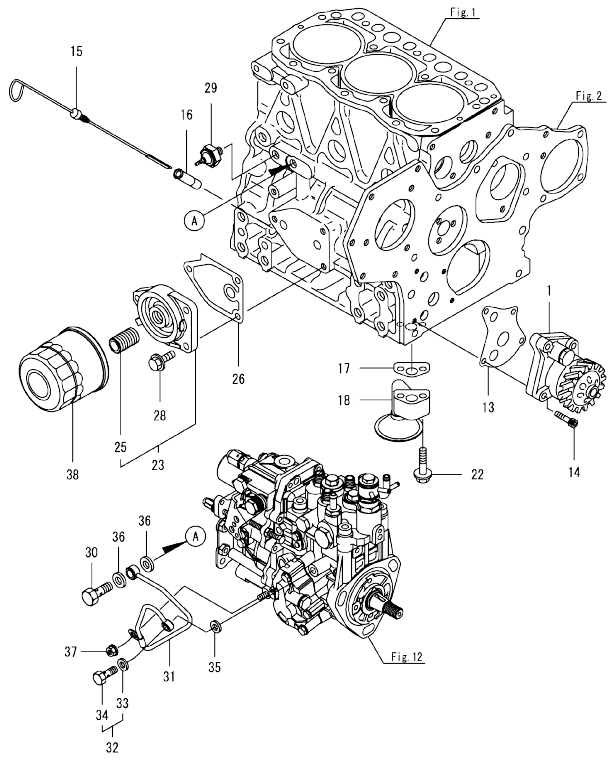

(A)=3TNV82A-BSTB
(B)=3TNV82A-BSTB1
(C)=
(D)=
(E)=
(F)=

No.	Lev.	Parts No.	Description	Q'ty (A)	(B)	(C)	(D)	(E)	(F)	I	R
1	1	129001-32002	PUMP ASSY, OIL	1	1						
13	1	129150-32020	GASKET, PUMP	1	1						
14	1	26450-060252	BOLT, M6X 25	4	4						
15	1	119802-34812	DIPSTICK	1	1						
16	1	121520-34810	GUIDE, DIPSTICK	1	1						
17	1	129150-35042	GASKET	1	1						
18	1	119810-35401	PIPE ASSY, OIL INLET	1	1						
22	1	26106-080352	BOLT, M8X 35 PLATED	2	2						
23	1	119802-35100	BRACKET ASSY, FILTER	1	1						
25	2	129100-35140	BOLT, STUD	1	1						
26	1	129150-35111	GASKET	1	1						
28	1	26106-080202	BOLT, M8X 20 PLATED	3	3						
29	1	114250-39450	SWITCH, HYDRAULIC	1	1						
30	1	124160-39140	BOLT, PIPE JOINT M10	1	1						
31	1	119802-39450	PIPE ASSY, OIL	1	1						
32	1	129005-59830	BOLT ASSY, JOINT M8	1	1						
33	2	22190-080002	WASHER, SEAL 8	1	1						
34	2	23857-030000	BOLT, JOINT 3	1	1						
35	1	22190-080002	WASHER, SEAL 8	1	1						
36	1	22190-100002	WASHER, SEAL 10	2	2						
37	1	26366-060002	NUT, M6	1	1						
38	1	129150-35153	FILTER ASSY, D80X80L	1	1						1

Remarks
(1)Spare parts.

N:Old $\xleftarrow[\text{No}]{\text{Yes}}$ New. Q:Old $\xleftarrow[\text{Yes}]{\text{No}}$ New, R:Old $\xleftarrow[\text{Yes}]{\text{Yes}}$ New, S:Old $\xleftarrow[\text{No}]{\text{No}}$ New, W:Add, Z:Discontinued, F:Interchangeable by set, K:Q'ty Change

Copyright (C) 2017 YANMAR CO., LTD. All RightsReserved.

Fig.11. COOLING WATER SYSTEM

(A)=3TNV82A-BSTB
(B)=3TNV82A-BSTB1
(C)=
(D)=
(E)=
(F)=

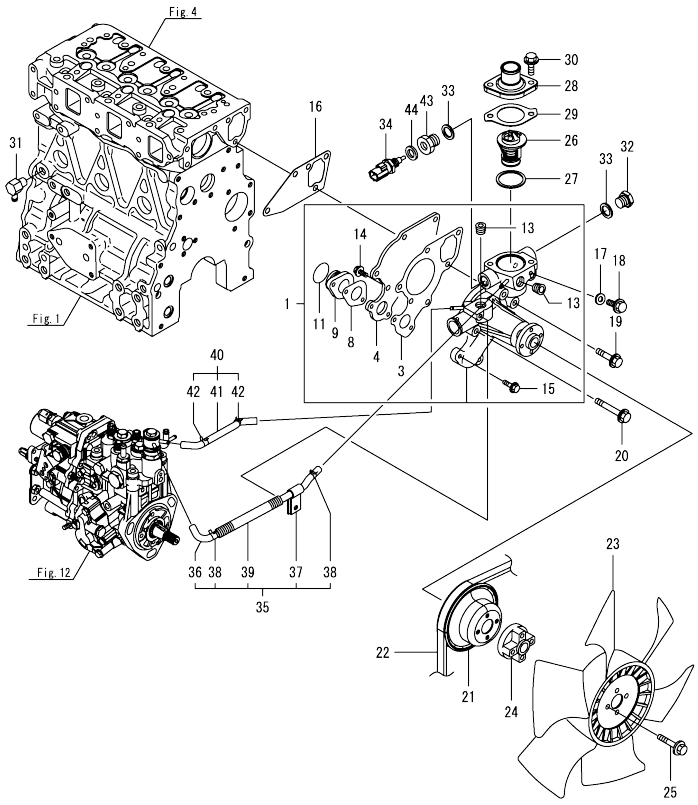

No.	Lev.	Parts No.	Description	Q'ty (A)	(B)	(C)	(D)	(E)	(F)	I	R
1	1	119802-42001	PUMP ASSY, WATER	1	1						
3	2	119810-42051	GASKET, WATER PUMP	1	1						
4	2	119810-42120	PLATE, PUMP	1	1						
8	2	119810-42281	GASKET, WATER PUMP	1	1						
9	2	119810-42290	PIPE, PUNP	1	1						
11	2	129054-42320	O-RING	1	1						
13	2	23876-030000	PLUG, R03	2	2						
14	2	26106-060142	BOLT, M6X 14 PLATED	2	2						
15	2	26106-060202	BOLT, M6X 20 PLATED	2	2						
16	1	129486-42050	GASKET, WATER PUMP	1	1						
17	1	23414-080000	GASKET, 8X1.0	1	1						
18	1	26106-080122	BOLT, M8X 12 PLATED	1	1						
19	1	26106-080352	BOLT, M8X 35 PLATED	1	1						
20	1	26106-080552	BOLT, M8X 55 PLATED	3	3						
21	1	129403-42380	V-PULLEY, D=110	1	1						
22	1	129612-42290	V-BELT, A37.5	1	1						
23	1	171340-44740	FAN, COOLING D335XNF	1	1						
24	1	171353-44760	SPACER, FAN	1	1						
25	1	26106-060402	BOLT, M6X 40 PLATED	4	4						
26	1	129457-49801	THERMOSTAT, 82	1	1						
27	1	129150-49811	GASKET, THERMOSTAT	1	1						
28	1	129350-49530	COVER, THERMOSTAT	1	1						
29	1	129795-49551	GASKET	1	1						
30	1	26106-080222	BOLT, M8X 22 PLATED	2	2						
31	1	121750-49110	JOINT	1	1						
32	1	121450-42450	PLUG, M16	1	1						
33	1	124465-44950	GASKET, 16	2	2						
34	1	129927-44900	SENSOR, TEMPERATURE	1	1						
35	1	119802-49610	HOSE ASSY, WATER	1	1						
36	2	119802-49711	HOSE ASSY, WATER	1	1						
37	2	119802-49730	RETAINER, PIPE	1	1						
38	2	124722-59050	CLAMP, HOSE 9	2	2						
39	2	119802-59320	TUBE, CORRUGATED	1	1						
40	1	119802-49620	HOSE ASSY, WATER	1	1						
41	2	119802-49721	HOSE ASSY, WATER	1	1						
42	2	124722-59050	CLAMP, HOSE 9	2	2						
43	1	129974-49350	JOINT	1	1						
44	1	22190-120002	WASHER, SEAL 12	1	1						

N:Old ←Yes/No→ New. Q:Old ←No/Yes→ New. R:Old ←Yes/Yes→ New. S:Old ←No/No→ New. W:Add. Z:Discontinued. F:Interchangeable by set. K:Q'ty Change

Copyright (C) 2017 YANMAR CO., LTD. All RightsReserved.

Fig.12. FUEL INJECTION PUMP

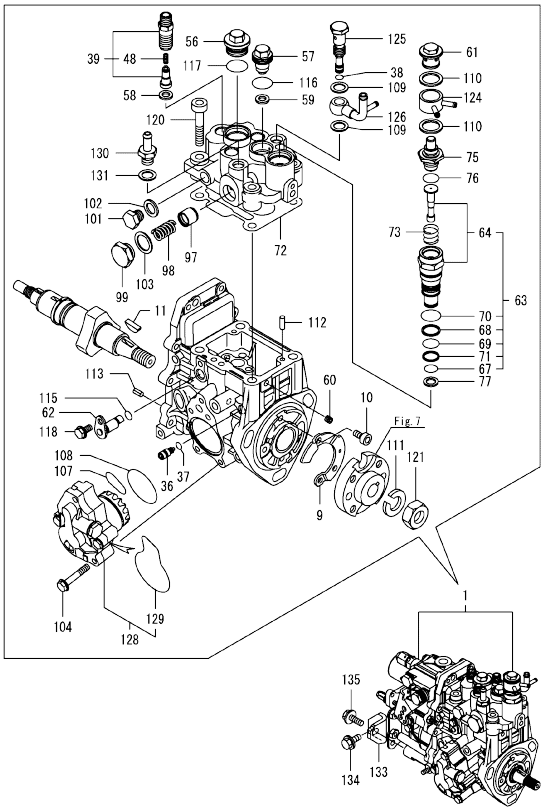

(A)=3TNV82A-BSTB
(B)=3TNV82A-BSTB1
(C)=
(D)=
(E)=
(F)=

No.	Lev.	Parts No.	Description	Q'ty (A)	(B)	(C)	(D)	(E)	(F)	I	R
1	1	719935-51420	FIE ASSY	1	1						1
9	2	129008-51900	COVER, PUMP	1	1						
10	2	129008-51920	BOLT, SOCKET M6X10	2	2						
11	2	119802-51090	FEATHER KEY, 4X16	1	1						
36	2	158600-51270	STOPPER, TAPPET	1	1						
37	2	158563-51281	O-RING, 4D S6	1	1						
38	2	158563-51281	O-RING, 4D S6	1	1						
39	2	129008-51390	VALVE ASSY, DELIVERY	3	3						
48	3	158563-51330	SPRING, DELIVERY	3	3						
56	2	158601-51550	PLUG, M22	1	1						
57	2	119802-51560	PLUG, M14	1	1						
58	2	158552-51571	GASKET, PLUG	3	3						
59	2	158552-51571	GASKET, PLUG	1	1						
60	2	158557-51570	PLUG, RACK	1	1						
61	2	158601-51570	PLUG	1	1						
62	2	158552-51580	LIFTER, LINK	1	1						
63	2	119802-51590	TIMER ASSY	1	1						
64	3	119802-51600	TIMER ASSY	1	1						
67	3	158553-51670	O-RING	1	1						
68	3	119802-51680	RING, BACKUP	1	1						
69	3	119802-51690	O-RING	1	1						
70	3	24356-190200	O-RING, 4D19020	1	1						
71	3	24372-000150	RING, BACK UP T2P15	1	1						
72	2	158552-51600	GASKET	1	1						
73	2	158553-51630	SPRING, TIMER	1	1						
75	2	158553-51650	THERMOELEMENT	1	1						
76	2	158553-51660	O-RING, P14	1	1						
77	2	158553-51680	GASKET, TIMER	1	1						
97	2	158601-51770	PISTON, ACCUMLATOR	1	1						
98	2	158552-51781	SPRING, ACCUMULATOR	1	1						
99	2	158601-51790	PLUG	1	1						
101	2	158553-51930	PLUG, M12	1	1						
102	2	22190-120002	WASHER, SEAL 12	1	1						
103	2	22190-180002	WASHER, SEAL 18	1	1						
104	2	158553-51770	BOLT	4	4						
107	2	158552-52311	O-RING	1	1						
108	2	158552-52400	O-RING, 4E S42	1	1						
109	2	22190-120002	WASHER, SEAL 12	2	2						
110	2	22190-180002	WASHER, SEAL 18	2	2						
111	2	22217-140000	WASHER, SPRING 14	1	1						
112	2	22312-050140	PIN, PARALLEL 5X14	2	2						
113	2	22351-050010	PIN, SPRING 5.0X10	2	2						
115	2	24311-000070	O-RING, 1AP7.0	1	1						
116	2	24356-190180	O-RING, 4D19018	1	1						
117	2	24356-190200	O-RING, 4D19020	1	1						
118	2	26106-060102	BOLT, M6X 10 PLATED	1	1						
120	2	26450-080452	BOLT, M8X 45	4	4						
121	2	26776-140002	NUT, LOCK M14	1	1						
124	2	158553-51551	JOINT, COOLING WATER	1	1						
125	2	158601-51650	JOINT, OVER FLOW	1	1						
126	2	158552-51670	JOINT, OVER FLOW	1	1						

Remarks
(1)Governor(Fig.13) is incorporated in this Fuel Injection Pump(No.1).

N:Old ←Yes/No→ New. Q:Old ←No/Yes→ New. R:Old ←Yes/Yes→ New. S:Old ←No/No→ New. W:Add. Z:Discontinued. F:Interchangeable by set. K:Q'ty Change

++ CONTINUE ++

Copyright (C) 2017 YANMAR CO., LTD. All RightsReserved.

Fig.12. FUEL INJECTION PUMP

(A)=3TNV82A-BSTB
(B)=3TNV82A-BSTB1
(C)=
(D)=
(E)=
(F)=

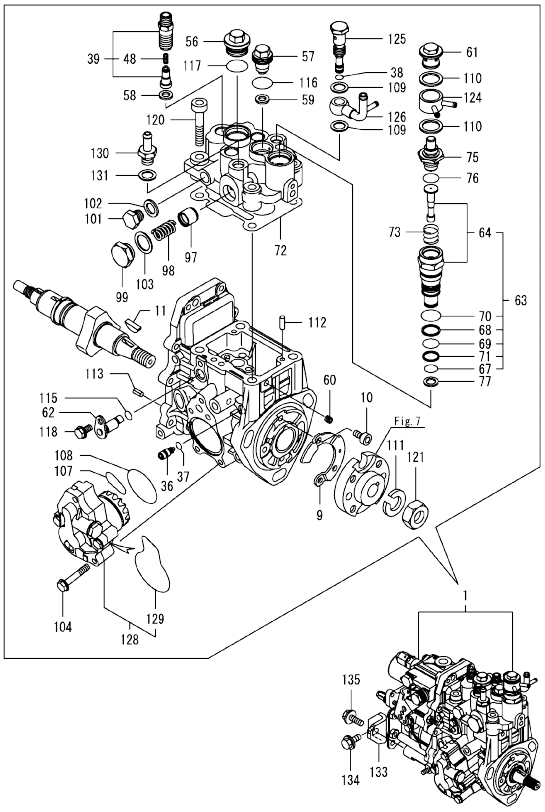

No.	Lev.	Parts No.	Description	Q'ty (A)	(B)	(C)	(D)	(E)	(F)	I	R
128	2	158552-52100	PUMP ASSY, FUEL FEED	1	1						
129	3	158552-52500	O-RING	1	1						
130	2	119934-59910	JOINT, PIPE	1	1						
131	2	22190-120002	WASHER, SEAL 12	1	1						
133	1	119802-51250	RETAINER, PUMP	1	1						
134	1	26106-080162	BOLT, M8X 16 PLATED	1	1						
135	1	26106-080202	BOLT, M8X 20 PLATED	1	1						

Remarks
(1)Governor(Fig.13) is incorporated in this Fuel Injection Pump(No.1).

N:Old ←Yes/No→ New. Q:Old ←No/Yes→ New. R:Old ←Yes/Yes→ New. S:Old ←No/No→ New. W:Add. Z:Discontinued. F:Interchangeable by set. K:Q'ty Change

Copyright (C) 2017 YANMAR CO., LTD. All RightsReserved.

Fig.13. GOVERNOR

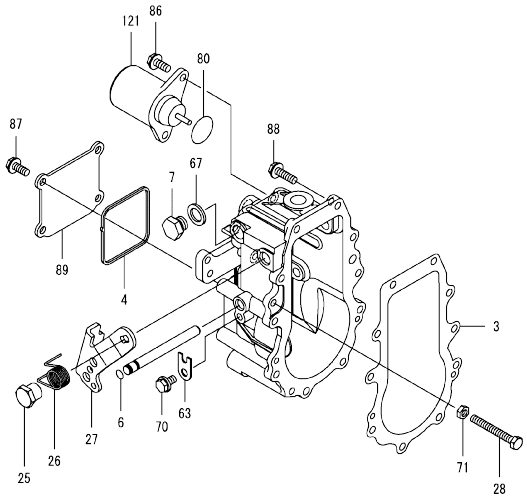

(A)=3TNV82A-BSTB
(B)=3TNV82A-BSTB1
(C)=
(D)=
(E)=
(F)=

No.	Lev.	Parts No.	Description	Q'ty (A)	(B)	(C)	(D)	(E)	(F)	I	R
3	2	158553-61050	GASKET	1	1						
4	2	158553-61070	GASKET	1	1						
6	2	129155-51280	O-RING, S6	1	1						
7	2	158553-51930	PLUG, M12	1	1						
25	2	129255-61410	NUT, M8	1	1						
26	2	119807-61420	SPRING, RETURN	1	1						
27	2	158552-61441	LEVER, REGULATOR	1	1						
28	2	129155-61461	BOLT,IDLE LIMIT	1	1						
63	2	119660-61901	STOPPER, SHAFT	1	1						
67	2	22190-120002	WASHER, SEAL 12	1	1						
70	2	26106-060102	BOLT, M6X 10 PLATED	1	1						
71	2	119740-61470	NUT	1	1						
80	2	158552-61900	O-RING	1	1						
86	2	26106-060142	BOLT, M6X 14 PLATED	2	2						
87	2	26106-060142	BOLT, M6X 14 PLATED	4	4						
88	2	26106-060202	BOLT, M6X 20 PLATED	10	10						
89	2	129642-61060	COVER, GOVERNOR CASE	1	1						
121	2	129630-77900	SOLENOID, STOP	1	1						

Remarks
* This figure(Governor) is incorporated in the Fuel Injection Pump(Fig.12).

N:Old ←Yes/No→ New. Q:Old ←No/Yes→ New. R:Old ←Yes/Yes→ New. S:Old ←No/No→ New. W:Add. Z:Discontinued. F:Interchangeable by set. K:Q'ty Change

Copyright (C) 2017 YANMAR CO., LTD. All RightsReserved.

Fig.14. FUEL INJECTION VALVE

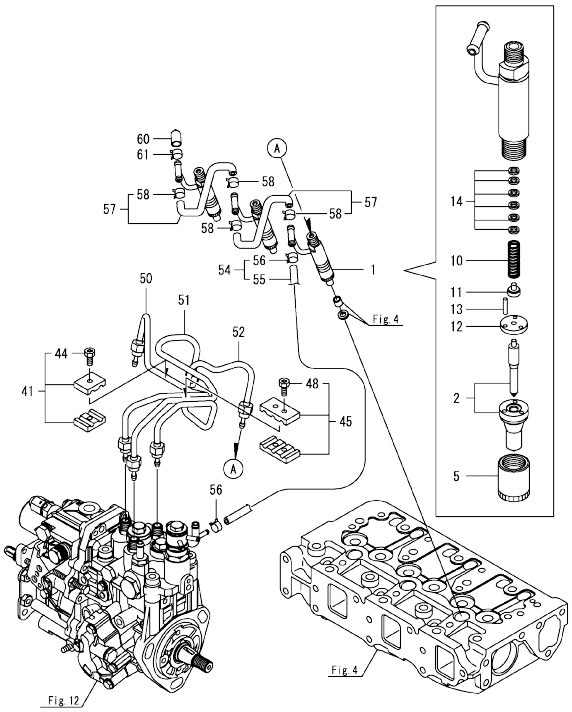

(A)=3TNV82A-BSTB
(B)=3TNV82A-BSTB1
(C)=
(D)=
(E)=
(F)=

No.	Lev.	Parts No.	Description	Q'ty (A)	(B)	(C)	(D)	(E)	(F)	I	R
1	1	719803-53100	VALVE ASSY,INJECTION	3	3						
2	2	119803-53000	VALVE ASSY,INJECTION	3	3						
5	2	114250-53080	NUT, NOZZLE	3	3						
10	2	114250-53120	SPRING, NOZZLE	3	3						
11	2	114250-53130	SEAT, SPRING	3	3						
12	2	114250-53140	SPACER	3	3						
13	2	114250-53210	PIN	6	6						
14	2	119803-53400	SHIM SET	3	3						1
41	1	119305-59120	RETAINER, PIPE	1	1						
44	2	129150-59131	BOLT, M4X14	1	1						
45	1	129150-59120	RETAINER, PIPE	1	1						
48	2	129150-59131	BOLT, M4X14	2	2						
50	1	119803-59810	PIPE ASSY, INJECTION	1	1						
51	1	119803-59820	PIPE ASSY, INJECTION	1	1						
52	1	119803-59830	PIPE ASSY, INJECTION	1	1						
54	1	119802-59550	HOSE ASSY, RETURN	1	1						
55	2	119802-59560	HOSE, FUEL RETURN	1	1						
56	2	124722-59050	CLAMP, HOSE 9	2	2						
57	1	129486-59551	HOSE ASSY, RETURN	2	2						
58	2	124722-59050	CLAMP, HOSE 9	4	4						
60	1	119593-59581	CAP	1	1						
61	1	124060-77680	CLAMP, HOSE 10	1	1						

Remarks
(1)Spare parts.

N:Old ◄Yes/No► New. Q:Old ◄No/Yes► New. R:Old ◄Yes/Yes► New. S:Old ◄No/No► New. W:Add. Z:Discontinued. F:Interchangeable by set. K:Q'ty Change

Copyright (C) 2017 YANMAR CO., LTD. All RightsReserved.

Fig.15. FUEL PIPE

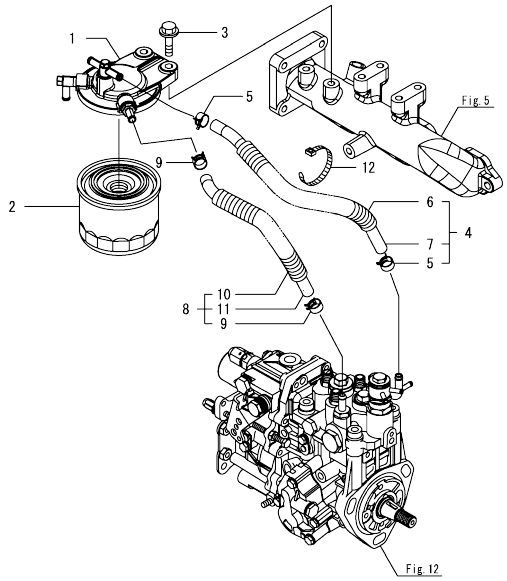

(A)=3TNV82A-BSTB
(B)=3TNV82A-BSTB1
(C)=
(D)=
(E)=
(F)=

No.	Lev.	Parts No.	Description	Q'ty (A)	(B)	(C)	(D)	(E)	(F)	I	R
1	1	129004-55612	BRACKET, FILTER	1	1						
2	1	119802-55801	FILTER, FUEL	1	1						
3	1	26106-080302	BOLT, M8X 30 PLATED	2	2						
4	1	129044-59010	HOSE ASSY, D13XL220	1	1						
5	2	124766-59050	CLAMP, HOSE 11.5	2	2						
6	2	129044-59100	TUBE, CORRUGATED 15	1	1						
7	2	129044-59510	HOSE, FUEL L=220	1	1						
8	1	129630-59010	HOSE ASSY, FUEL	1	1						
9	2	124766-59050	CLAMP, HOSE 11.5	2	2						
10	2	129961-59110	TUBE, CORRUGATED 15	1	1						
11	2	105025-59560	HOSE, FUEL	1	1						
12	1	121750-59890	BAND, NYLON	1	1						

N:Old ◄Yes/No► New. Q:Old ◄No/Yes► New. R:Old ◄Yes/Yes► New. S:Old ◄No/No► New. W:Add. Z:Discontinued. F:Interchangeable by set. K:Q'ty Change

Copyright (C) 2017 YANMAR CO., LTD. All RightsReserved.

Fig.16. STARTER MOTOR

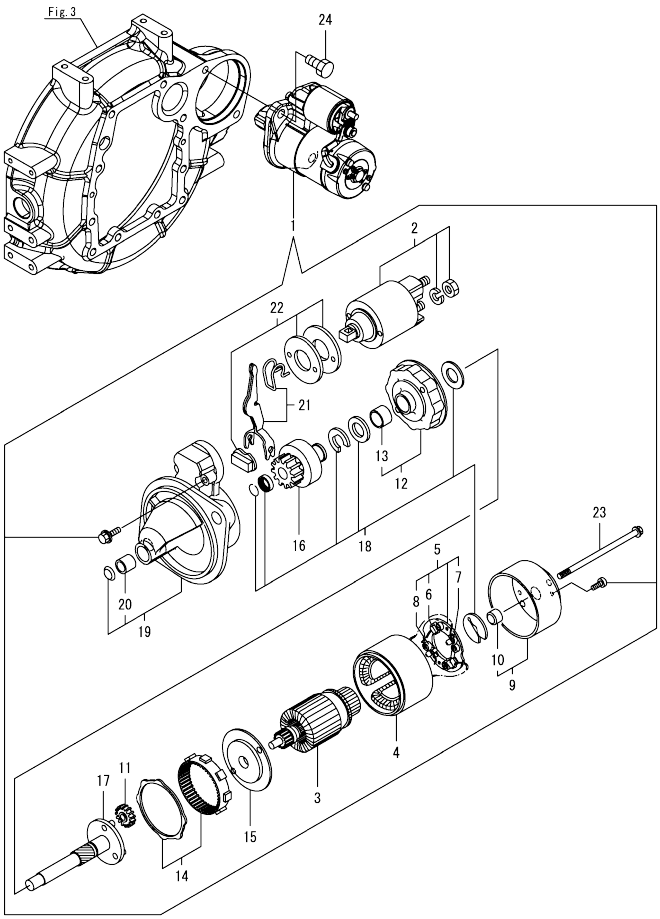

(A)=3TNV82A-BSTB
(B)=3TNV82A-BSTB1
(C)=
(D)=
(E)=
(F)=

No.	Lev.	Parts No.	Description	Q'ty (A)	(B)	(C)	(D)	(E)	(F)	I	R
1	1	119935-77010	STARTER, 12V-1.7KW	1	1						
2	2	119935-77020	SWITCH ASSY, MAGNET	1	1						
3	2	129242-77100	ARMATURE ASSY	1	1						
4	2	129242-77110	YOKE ASSY	1	1						
5	2	129242-77120	HOLDER ASSY, BRUSH	1	1						
6	3	129242-77130	BRUSH	2	2						
7	3	129242-77140	BRUSH SET	1	1						
8	3	129242-77150	SPRING, BRUSH	4	4						
9	2	129242-77160	COVER ASSY	1	1						
10	3	129242-77170	BEARING, COVER	1	1						
11	2	118400-77170	GEAR, PLANETARY	3	3						
12	2	129242-77180	BRACKET, CENTER	1	1						
13	3	129698-77190	BRACKET, CENTER	1	1						
14	2	129698-77200	GEAR, INTERNAL	1	1						
15	2	129242-77210	BRACKET, CENTER	1	1						
16	2	129698-77220	PINION ASSY	1	1						
17	2	129698-77230	SHAFT, PINION	1	1						
18	2	129698-77250	WASHER SET	1	1						
19	2	129242-77260	CASE ASSY, GEAR	1	1						
20	3	X2114535200	BEARING, STARTER	1	1						
21	2	129242-77270	LEVER SET	1	1						
22	2	129242-77280	COVER KIT, DUST	1	1						
23	2	124195-77770	BOLT, THROUGH	2	2						
24	1	26106-120252	BOLT, M12X 25 PLATED	2	2						

N:Old ◄Yes/No► New. Q:Old ◄No/Yes► New. R:Old ◄Yes/Yes► New. S:Old ◄No/No► New. W:Add. Z:Discontinued. F:Interchangeable by set. K:Q'ty Change

Copyright (C) 2017 YANMAR CO., LTD. All RightsReserved.

Fig.17. GENERATOR

(A)=3TNV82A-BSTB
(B)=3TNV82A-BSTB1
(C)=
(D)=
(E)=
(F)=

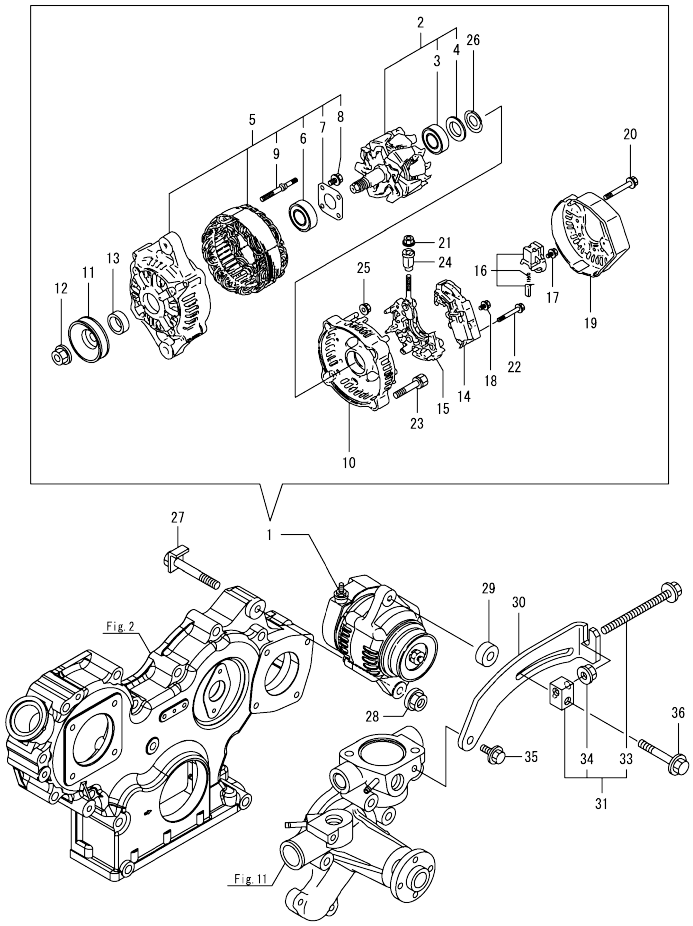

No.	Lev.	Parts No.	Description	Q'ty (A)	(B)	(C)	(D)	(E)	(F)	I	R
1	1	129240-77200	ALTERNATOR, 12V-40A	1	1						
2	2	119620-77380	ROTOR ASSY	1	1						
3	3	123501-79240	BEARING, BALL	1	1						
4	3	119620-79250	COVER, BEARING	1	1						
5	2	119620-77421	FRAME ASSY,GENERATOR	1	1						
6	3	119620-79200	BEARING, BALL	1	1						
7	3	119620-79210	RETAINER	1	1						
8	3	119620-79220	SCREW	4	4						
9	3	119620-79230	BOLT, STUD	2	2						
10	2	119620-77440	FRAME ASSY	1	1						
11	2	119620-77461	PULLEY, GENERATOR	1	1						
12	2	119620-77471	NUT	1	1						
13	2	119620-77490	COLLAR	1	1						
14	2	129240-77720	REGULATOR ASSY	1	1						
15	2	119620-79260	HOLDER	1	1						
16	2	129052-79270	HOLDER, BRUSH	1	1						
17	2	119620-79290	SCREW	6	6						
18	2	119620-79300	SCREW	1	1						
19	2	129240-79300	COVER	1	1						
20	2	119620-79310	BOLT	3	3						
21	2	129240-79310	NUT	1	1						
22	2	119620-79320	SCREW	2	2						
23	2	119620-79330	BOLT	2	2						
24	2	119620-79340	BUSH, INSULATION	1	1						
25	2	119620-79350	NUT	2	2						
26	2	119620-79360	WASHER, THRUST	1	1						
27	1	119740-77251	BOLT, M10X80	1	1						
28	1	26306-100002	NUT, M10	1	1						
29	1	119940-77270	SPACER	1	1						
30	1	129642-77310	ADJUSTER, BELT	1	1						
31	1	119624-77351	BLOCK ASSY, ADJUSTER	1	1						
33	2	26106-081004	BOLT, M8X100 PLATED	1	1						
34	2	26306-080002	NUT, M8	1	1						
35	1	26106-080452	BOLT, M8X 45 PLATED	1	1						
36	1	26106-080552	BOLT, M8X 55 PLATED	1	1						

N:Old ◄Yes/No► New. Q:Old ◄No/Yes► New. R:Old ◄Yes/Yes► New. S:Old ◄No/No► New. W:Add. Z:Discontinued. F:Interchangeable by set. K:Q'ty Change

Copyright (C) 2017 YANMAR CO., LTD. All RightsReserved.

Fig.18. ACCESSORY

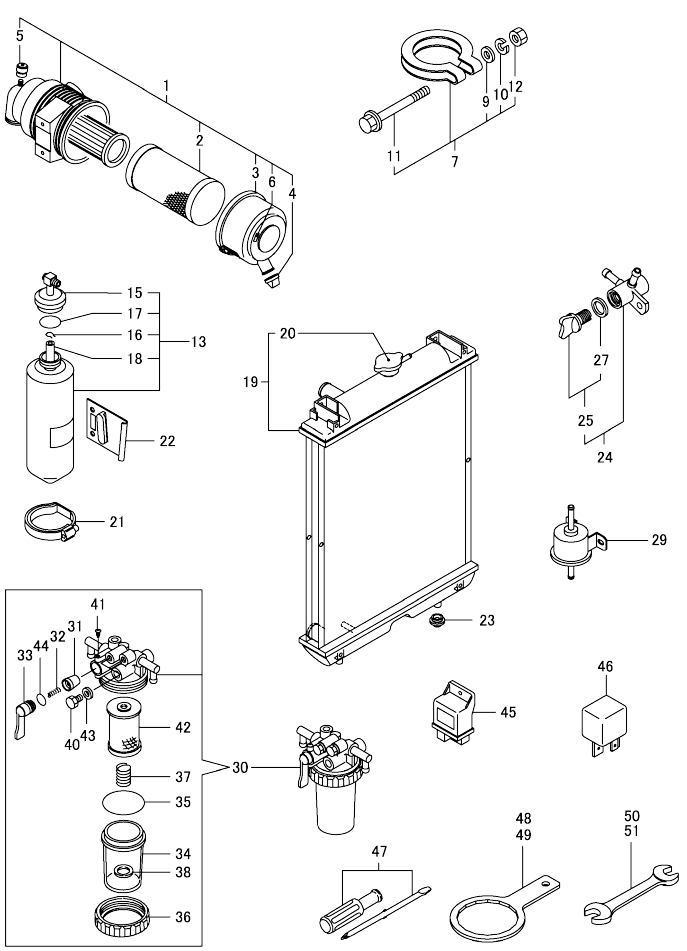

(A)=3TNV82A-BSTB
(B)=3TNV82A-BSTB1
(C)=
(D)=
(E)=
(F)=

No.	Lev.	Parts No.	Description	Q'ty (A)	(B)	(C)	(D)	(E)	(F)	I	R
1	1	119935-12530	AIR CLEANER ASSY	1	1						
2	2	119808-12520	ELEMENT, OUTER	1	1						
3	2	119866-12541	COVER ASSY	1	1						
4	2	119808-12540	VALVE, UNLOAD	1	1						
5	2	119140-12680	INDICATOR, CLEANER	1	1						
6	2	129418-12530	LABEL, MARK	2	2						
7	1	121120-13590	CLAMP	1	1						
9	2	22117-100000	WASHER, 10	1	1						
10	2	22217-100000	WASHER, SPRING 10	1	1						
11	2	26106-100652	BOLT, M10X 65 PLATED	1	1						
12	2	26706-100002	NUT, M10	1	1						
13	1	171064-44510	TANK ASSY, SUB	1	1						
15	2	121450-44531	CAP	1	1						
16	2	124450-44560	CLAMP, HOSE	1	1						
17	2	121470-44581	GASKET	1	1						
18	2	23065-070225	HOSE 7X 225	1	1						
19	1	119935-44530	RADIATOR ASSY	1	1						
20	2	129107-44590	CAP, RADIATOR	1	1						
21	1	124450-44550	BAND, SUB-TANK	1	1						
22	1	121256-44600	BRACKET, SUB TANK	1	1						
23	1	119255-44660	RUBBER,RADIATOR	2	2						
24	1	129150-49100	COCK ASSY, 3-WAY	1	1						
25	2	129150-49080	COCK, DRAIN	1	1						
27	3	119629-49080	GASKET	1	1						
29	1	129612-52100	PUMP, FUEL FEED	1	1						
30	1	129335-55701	SEPARATOR ASSY,WATER	1	1						
31	2	104200-55321	VALVE, TAPER	1	1						
32	2	104200-55330	SPRING, FUEL VALVE	1	1						
33	2	104200-55341	HANDLE, COCK	1	1						
34	2	124064-55510	CUP, FUEL STARINER	1	1						
35	2	102103-55520	O-RING	1	1						
36	2	110250-55610	RING, CUP RETAINING	1	1						
37	2	121257-55720	SPRING, FILTER	1	1						
38	2	121257-55731	FLOAT	1	1						
40	2	101720-55750	PLUG, HEXAGON M6	2	2						
41	2	104200-55750	SCREW, PAN M4	1	1						
42	2	171081-55910	FILTER, FUEL	1	1						
43	2	23418-060000	GASKET, 6X1.0	2	2						
44	2	24311-240100	O-RING, 1AP10A	1	1						
45	1	119802-77200	RELAY, SAFETY	1	1						
46	1	129927-77930	RELAY, ISO 40A	2	2						
47	1	104200-92350	SCREW-DRIVER	1	1						
48	1	119640-92750	TOOL, FILTER WRENCH	1	1						
49	1	171301-92750	WRENCH, FILTER	1	1						
50	1	28110-100120	SPANNER, 10X12	1	1						
51	1	28110-140170	SPANNER, 14X17	1	1						

N:Old ←Yes/No→ New. Q:Old ←No/Yes→ New. R:Old ←Yes/Yes→ New. S:Old ←No/No→ New. W:Add. Z:Discontinued. F:Interchangeable by set. K:Q'ty Change

Copyright (C) 2017 YANMAR CO., LTD. All RightsReserved.

Fig.19. GASKET SET

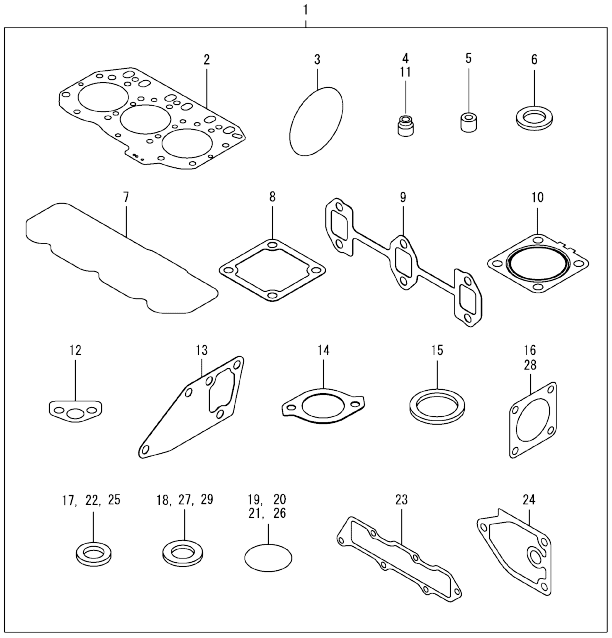

(A)=3TNV82A-BSTB
(B)=3TNV82A-BSTB1
(C)=
(D)=
(E)=
(F)=

No.	Lev.	Parts No.	Description	Q'ty (A)	(B)	(C)	(D)	(E)	(F)	I	R
1	1	719823-92880	GASKET SET	1	1						1
2	2	119812-01330	GASKET, HEAD	1	1						
3	2	121850-51960	O-RING	1	1						
4	2	124950-11340	SEAL, VALVE STEM	3	3						
5	2	119802-11870	PROTECTOR, NOZZLE	3	3						
6	2	119625-11880	SEAT, NOZZLE	3	3						
7	2	119802-11310	GASKET, BONNET	1	1						
8	2	129150-77511	GASKET, AIR HEATER	1	1						
9	2	119810-13110	GASKET, EXH.MANIFOLD	1	1						
10	2	129004-13200	GASKET, SILENCER	1	1						
11	2	124160-11340	SEAL, VALVE STEM	3	3						
12	2	129150-35042	GASKET	1	1						
13	2	129486-42050	GASKET, WATER PUMP	1	1						
14	2	129795-49551	GASKET	1	1						
15	2	129150-49811	GASKET, THERMOSTAT	1	1						
16	2	129150-01881	GASKET	1	1						
17	2	22190-080002	WASHER, SEAL 8	2	2						
18	2	124465-44950	GASKET, 16	1	1						
19	2	24311-000120	O-RING, 1AP12.0	3	3						
20	2	24311-000320	O-RING, 1AP32.0	2	2						
21	2	24341-000240	O-RING, 1AS24.0	1	1						
22	2	22190-100002	WASHER, SEAL 10	2	2						
23	2	119813-12110	GASKET, MANIFOLD	1	1						
24	2	129150-35111	GASKET	1	1						
25	2	22190-220002	WASHER, SEAL 22	1	1						
26	2	119609-32040	O-RING, P16	4	4						
27	2	23414-080000	GASKET, 8X1.0	1	1						
28	2	124240-01883	GASKET	2	2						
29	2	129150-49360	GASKET	1	1						

Remarks
(1)Optional parts.

N:Old ←Yes/No→ New. Q:Old ←No/Yes→ New. R:Old ←Yes/Yes→ New. S:Old ←No/No→ New. W:Add. Z:Discontinued. F:Interchangeable by set. K:Q'ty Change

Copyright (C) 2017 YANMAR CO., LTD. All RightsReserved.

Parts No. Index

Parts No.	Fig. No.	Ref. No.
101720-55750	18	40
102103-55520	18	35
104200-55321	18	31
104200-55330	18	32
104200-55341	18	33
104200-55750	18	41
104200-92350	18	47
104211-11180	4	22
104211-11370	4	12
105025-59560	15	11
110250-55610	18	36
114250-39450	10	29
114250-53080	14	5
114250-53120	14	10
114250-53130	14	11
114250-53140	14	12
114250-53210	14	13
118400-77170	16	11
119131-18320	6	5
119140-12680	18	5
119255-44660	18	23
119305-59120	14	41
119593-59581	14	60
119609-32040	2	9
	19	26
119620-01750	3	3
119620-02020	1	9
119620-77380	17	2
119620-77421	17	5
119620-77440	17	10
119620-77461	17	11
119620-77471	17	12
119620-77490	17	13
119620-79200	17	6
119620-79210	17	7
119620-79220	17	8
119620-79230	17	9
119620-79250	17	4
119620-79260	17	15
119620-79290	17	17
119620-79300	17	18
119620-79310	17	20
119620-79320	17	22
119620-79330	17	23
119620-79340	17	24
119620-79350	17	25
119620-79360	17	26
119624-77351	17	31
119625-11880	4	28
	19	6

Parts No.	Fig. No.	Ref. No.
119629-49080	18	27
119640-01640	3	8
119640-92750	18	48
119641-26020	9	10
119660-61901	13	63
119717-02930	1	15
119740-61470	13	71
119740-77251	17	27
119802-01561	2	5
119802-03010	4	37
119802-03090	5	1
119802-03110	4	39
119802-03121	4	40
119802-03130	4	41
119802-03141	4	42
119802-11100	4	19
119802-11110	4	20
119802-11241	4	1
119802-11251	4	2
119802-11260	4	4
119802-11270	4	5
119802-11280	4	6
119802-11310	4	44
	19	7
119802-11350	4	36
119802-11650	4	8
119802-11810	4	56
119802-11870	4	27
	19	5
119802-11900	4	29
119802-12130	5	4
119802-13129	6	2
119802-14580	7	3
119802-22500	8	17
119802-22950	8	34
119802-25071	7	16
119802-25101	7	10
119802-25901	7	15
119802-34812	10	15
119802-35100	10	23
119802-39450	10	31
119802-42001	11	1
119802-49610	11	35
119802-49620	11	40
119802-49711	11	36
119802-49721	11	41
119802-49730	11	37
119802-51090	12	11
119802-51250	12	133
119802-51560	12	57

Parts No.	Fig. No.	Ref. No.
119802-51590	12	63
119802-51600	12	64
119802-51680	12	68
119802-51690	12	69
119802-55801	15	2
119802-59320	11	39
119802-59550	14	54
119802-59560	14	55
119802-77200	18	45
119803-11340	4	23
119803-11700	4	13
119803-21000	8	1
119803-21200	8	4
119803-22080	8	15
119803-25050	7	9
119803-53000	14	2
119803-53400	14	14
119803-59810	14	50
119803-59820	14	51
119803-59830	14	52
119803-77520	5	6
119803-77821	4	53
119803-77830	4	54
119807-61420	13	26
119808-12520	18	2
119808-12540	18	4
119810-01200	1	27
119810-01730	3	6
119810-02871	1	32
119810-02941	1	35
119810-11120	4	21
119810-12112	5	3
119810-13110	6	1
	19	9
119810-14400	7	2
119810-23200	8	26
119810-23601	8	27
119810-23611	8	30
119810-23910	8	29
119810-35401	10	18
119810-42051	11	3
119810-42120	11	4
119810-42281	11	8
119810-42290	11	9
119812-01330	1	28
	19	2
119813-12110	19	23
119813-22300	8	21
119843-01780	3	7
119865-21600	8	14

Parts No.	Fig. No.	Ref. No.
119866-12541	18	3
119934-01800	2	3
119934-59910	12	130
119935-01500	2	1
119935-01600	3	2
119935-12530	18	1
119935-21650	8	8
119935-44530	18	19
119935-77010	16	1
119935-77020	16	2
119940-77270	17	29
120270-54410	4	30
121023-01551	2	22
121111-21501	8	11
121120-13590	18	7
121256-44600	18	22
121257-55720	18	37
121257-55731	18	38
121450-42450	11	32
121450-44531	18	15
121470-44581	18	17
121520-34810	10	16
121750-49110	11	31
121750-59890	15	12
121850-21680	8	10
121850-51960	2	10
	19	3
123501-79240	17	3
123900-13610	6	3
124060-01050	1	4
124060-11800	4	55
124060-77680	14	61
124064-55510	18	34
124160-01751	2	6
	4	35
124160-01910	1	6
		7
124160-11340	4	24
	19	11
124160-11360	4	47
124160-39140	10	30
124195-77770	16	23
124240-01871	2	7
		19
124240-01883	19	28
124450-44550	18	21
124450-44560	18	16
124465-44950	11	33
	19	18
124722-59050	11	38

Parts No. Index

Parts No.	Fig. No.	Ref. No.
124722-59050	11	42
	14	56
		58
124766-59050	15	5
		9
124950-11340	19	4
129001-01250	1	5
129001-32002	10	1
129004-13200	6	7
	19	10
129004-55612	15	1
129005-59830	10	32
129008-01520	2	4
129008-51390	12	39
129008-51900	12	9
129008-51920	12	10
129008-77800	4	52
129044-59010	15	4
129044-59100	15	6
129044-59510	15	7
129052-79270	17	16
129054-42320	11	11
129100-01580	3	1
		13
	8	2
129100-01640	3	14
129100-35140	10	25
129107-44590	18	20
129150-01580	2	25
129150-01881	9	1
	19	16
129150-02450	7	4
129150-03070	4	38
129150-11230	4	9
129150-11280	4	7
129150-11750	4	11
129150-14101	7	6
129150-14200	7	1
129150-25301	7	14
129150-26000	9	2
129150-26050	9	3
129150-32020	10	13
129150-35042	10	17
	19	12
129150-35111	10	26
	19	24
129150-35153	10	38
129150-49080	18	25
129150-49100	18	24
129150-49360	19	29

Parts No.	Fig. No.	Ref. No.
129150-49811	11	27
	19	15
129150-59120	14	45
129150-59131	14	44
		48
129150-77511	5	7
	19	8
129155-51280	13	6
129155-61461	13	28
129240-13550	6	9
129240-77200	17	1
129240-77720	17	14
129240-79300	17	19
129240-79310	17	21
129242-13510	6	8
129242-77100	16	3
129242-77110	16	4
129242-77120	16	5
129242-77130	16	6
129242-77140	16	7
129242-77150	16	8
129242-77160	16	9
129242-77170	16	10
129242-77180	16	12
129242-77210	16	15
129242-77260	16	19
129242-77270	16	21
129242-77280	16	22
129255-61410	13	25
129335-55701	18	30
129350-49530	11	28
129403-42380	11	21
129410-03990	5	2
129418-12530	18	6
129457-49801	11	26
129486-01670	3	17
129486-42050	11	16
	19	13
129486-59551	14	57
129489-21590	8	12
129612-42290	11	22
129612-52100	18	29
129630-59010	15	8
129630-77900	13	121
129642-61060	13	89
129642-77310	17	30
129698-77190	16	13
129698-77200	16	14
129698-77220	16	16
129698-77230	16	17

Parts No.	Fig. No.	Ref. No.
129698-77250	16	18
129792-22400	8	22
129795-01780	3	16
129795-01950	2	8
129795-02412	1	12
129795-21661	8	9
129795-49551	11	29
	19	14
129900-07900	4	50
129927-44900	11	34
129927-77930	18	46
129961-59110	15	10
129974-49350	11	43
129C26-01890	2	20
	9	6
129E00-13640	6	4
158552-51151	7	17
158552-51571	12	58
		59
158552-51580	12	62
158552-51600	12	72
158552-51670	12	126
158552-51781	12	98
158552-52100	12	128
158552-52311	12	107
158552-52400	12	108
158552-52500	12	129
158552-61441	13	27
158552-61900	13	80
158553-51551	12	124
158553-51630	12	73
158553-51650	12	75
158553-51660	12	76
158553-51670	12	67
158553-51680	12	77
158553-51770	12	104
158553-51930	12	101
	13	7
158553-61050	13	3
158553-61070	13	4
158557-51570	12	60
158563-51281	12	37
		38
158563-51330	12	48
158600-51270	12	36
158601-51550	12	56
158601-51570	12	61
158601-51650	12	125
158601-51770	12	97
158601-51790	12	99

Parts No.	Fig. No.	Ref. No.
171051-01921	1	8
171064-44510	18	13
171081-55910	18	42
171301-92750	18	49
171340-44740	11	23
171353-44760	11	24
22117-100000	18	9
22190-080002	2	11
	10	33
		35
	19	17
22190-100002	10	36
	19	22
22190-120002	11	44
	12	102
		109
		131
	13	67
22190-180002	12	103
		110
22190-220002	3	10
	19	25
22217-100000	18	10
22217-140000	12	111
22312-050140	12	112
22351-030010	8	7
22351-050010	12	113
22351-060012	4	31
22512-070140	7	7
	8	5
22857-500100	4	45
		46
23065-070225	18	18
23414-080000	11	17
	19	27
23418-060000	18	43
23857-030000	10	34
23876-030000	11	13
24105-060064	9	5
24311-000070	12	115
24311-000120	4	48
	19	19
24311-000320	2	12
	4	49
	19	20
24311-240100	18	44
24341-000240	2	23
	19	21
24356-190180	12	116
24356-190200	12	70

Parts No. Index

Parts No.	Fig. No.	Ref. No.
24356-190200	12	117
24372-000150	12	71
26106-060102	12	118
	13	70
26106-060142	11	14
	13	86
		87
26106-060162	2	24
26106-060202	11	15
	13	88
26106-060402	11	25
26106-080122	11	18
26106-080142	7	8
26106-080162	2	13
		14
		21
	3	11
	4	51
	12	134
26106-080202	5	8
	10	28
	12	135
26106-080222	11	30
26106-080252	4	32
	5	5
26106-080302	2	15
	15	3
26106-080352	3	18
	10	22
	11	19
26106-080402	7	13
26106-080452	3	12
	4	33
	17	35
26106-080502	4	34
26106-080552	2	16
	11	20
	17	36
26106-080802	5	9
26106-080852	2	17
26106-080952	9	7
26106-081004	17	33
26106-100162	6	10
26106-100652	18	11
26106-120252	16	24
26206-100252	3	4
26206-100302	3	5
26216-080402	9	8
26306-080002	2	18
	6	6

Parts No.	Fig. No.	Ref. No.
26306-080002	6	11
	9	9
	17	34
26306-100002	17	28
26366-060002	10	37
26450-060252	10	14
26450-080452	12	120
26706-100002	18	12
26776-140002	12	121
27241-120000	1	13
27241-300000	1	14
27241-400000	4	18
27310-070001	4	25
28110-100120	18	50
28110-140170	18	51
719802-01560	1	1
719803-22900	8	32
719803-53100	14	1
719810-02981	1	29
719810-23100	8	23
719823-92880	19	1
719935-51420	12	1
X2114535200	16	20

Parts No.	Fig. No.	Ref. No.

Parts No.	Fig. No.	Ref. No.