YANMAR

# PARTS CATALOG

0CV10-M97100EN

Last update Sep., 2014

# PREFACE

1.This Parts Catalog carries all parts incorporated in YANMAR Model 3TNV82A-DCR engine manufactured since May, 2004.

2.Each illustration corresponds to the parts list on the following page.

3.When ordering parts,clearly write down the engine model and serial number,as well as the name and number of each part in your order sheet. This will help insure reliable delivery of the parts you have ordered.

## Directions for the Parts Catalog.

**1.The parts stipulated in this Parts Catalog are not necessarily standard equipped parts.**
**2.Parts may change without prior notice.**
**3.The following is an example of the Parts Catalog format.**

0CF10-G21601 29. FUEL INJECTION PUMP(W/BOOST)

(A)=4JH-DT
(B)=4JH-DTZ
(C)=4JH-DTZP
(D)=4JH-DTZA
(E)=4JH-DTZY
(F)=

| ① REF. | ② LEV. | PARTS NO. | DESCRIPTION | Q'TY (A) | (B) | (C) | (D) | (E) | (F) | ③ I | ⑤ R |
|---|---|---|---|---|---|---|---|---|---|---|---|
| 1 | 1 | 729595-51390 | FUEL INJECTION PUMP | 1 | 1 | 1 | 1 | 1 | | | 1 |
| 1-1 | 1 | 729595-51391 | FUEL INJECTION PUMP | 1 | 1 | 1 | 1 | 1 | | N | 1 |
| | (A=E00185) | (B=E00200) | | | | | | | | | |
| 3 | 2 | 26022-060162 | SCREW M 6X 16 | 9 | 9 | 9 | 9 | 9 | | | |
| 3-1 ④ | 2 | 26022-060162 | SCREW M 6X 16 | 4 | 4 | 4 | 4 | 4 | | K | |
| | (A=E00156) | (B=E00156) | (C=E00156) (D=E00156) | (E=E00156) | | | | | | | |
| 4 | 2 | 129470-51040 | CAMSHAFT | 1 | 1 | 1 | 1 | 1 | | | |
| 5 | 2 | 122710-51050 | BEARING, ROLLER | 2 | 2 | 2 | 2 | 2 | | | |
| 6 | 2 | 129470-51060 | RETAINER | 1 | 1 | 1 | 1 | 1 | | | |

Remarks
(1) BOOST COMPEMSATOR TYPE. OPTIONAL
PART, TO E00155,(4JH-DT, 4JH-DTZ

### ① Ref. No.

The Ref. No. listed may not be in accordance with the illustration Ref. No.

(Ex.) Illustration No. 1 List Ref No. 1 (Before change) → 1- 1 (After change)

For interchangeable symbols N, R and K, illustrations for new parts may be abbreviated.

### ② Lev. (Level)

Level indication
The numbers below indicate the level of relativity towards the main part.
1 ----- Main parts (Assembly parts)
2 ----- Sub component included in " 1 ".
3 ----- Sub component included in " 2 ".
Note) Parts that are not for sale are partially illustrated but not listed.

### ③ Interchangeability Mark

When a part change takes place, one of the following interchangeability symbols is indicated beside the part.

| Symbol | Interchangeability | Contents note |
|---|---|---|
| N | Old ← Yes / No → New | New Part is interchangeable for Old Part but Old Part is not interchangeable for New Part. |
| Q | Old ← No / Yes → New | New Part is not interchangeable for Old Part but Old Part is interchangeable for New Part. |
| R | Old ← Yes / Yes → New | New/ Old Parts are both interchangeable. |
| S | Old ← No / No → New | New/ Old Parts are both not interchangeable. |
| W | | Part newly added. |
| Z | | Part discontinued. |
| F | | Not interchangeable by a single part but interchangeable together with related parts. |
| K | | Changes only for used parts quantities. |

### ④ Effective Machine No.

When a part changes, the effective Machine No. will be indicated in the (A)-(F) column.

| Product Symbol | Product No. | Product Symbol | Product No. |
|---|---|---|---|
| C | Clutch No. Compressor No. | F | Machine No. (Agricultural Equip.) |
| D | Drive No. | M | Machine No. |
| E | Engine No. | | |

Note 1) A date may follow the symbol. (Ex.) 1996.01
Note 2) " XXXXX " and " ZZZZZ " are for parts that could not be predicted or for engine models that could not be identified.
Note 3) (A=E00185) is the E (Engine Serial Number) for the column (A) model (in this case 4JH-DT) after the parts design change.

### ⑤ Remarks Mark

Figures or alphabets (symbols) are entered in the remarks column.
The comments (remarks) on parts that are indicated at the bottom of the illustration are the same symbols as those stated above.

# Contents


| Fig. No. | Fig. Name |
|---|---|
| ENGINE SECTION (3TNV82A-DCR) | |
| 1. | CYLINDER BLOCK |
| 2. | GEAR HOUSING |
| 3. | MOUNTING FLANGE & OIL SUMP |
| 4. | CYLINDER HEAD & BONNET |
| 5. | SUCTION MANIFOLD |
| 6. | EXHAUST MANIFOLD |
| 7. | CAMSHAFT & DRIVING GEAR |
| 8. | CRANKSHAFT & PISTON |
| 9. | LUB.OIL SYSTEM |
| 10. | COOLING WATER SYSTEM |
| 11. | FUEL INJECTION PUMP |
| 12. | FUEL INJECTION VALVE |
| 13. | FUEL LINE |
| 14. | STARTING MOTOR |
| 15. | GENERATOR |
| 16. | GASKET SET |

| Fig. No. | Fig. Name |
|---|---|

0CV10-M97100

# Fig.1. CYLINDER BLOCK

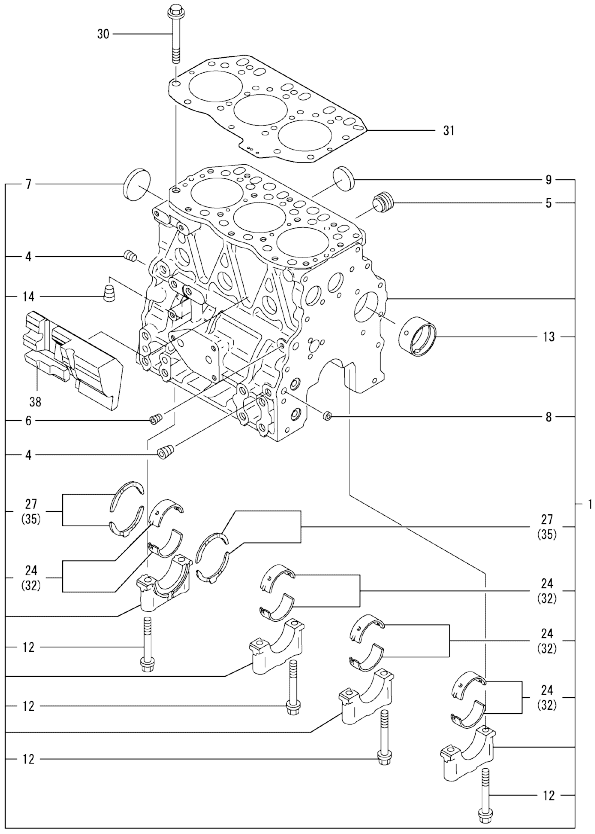


(A)=3TNV82A-DCR
(B)=
(C)=
(D)=
(E)=
(F)=

| No. | Lev. | Parts No. | Description | Q'ty (A) | (B) | (C) | (D) | (E) | (F) | I | R |
|---|---|---|---|---|---|---|---|---|---|---|---|
| 1 | 1 | 719802-01560 | BLOCK ASSY, CYLINDER | 1 | | | | | | | |
| 4 | 2 | 124160-01910 | PLUG, PT1/4 | 2 | | | | | | | |
| 5 | 2 | 171051-01921 | PLUG, NPTF1 | 1 | | | | | | | |
| 6 | 2 | 124060-01050 | PLUG, PT1/8 | 1 | | | | | | | |
| 7 | 2 | 129001-01250 | PLUG, 50 | 1 | | | | | | | |
| 8 | 2 | 27241-120000 | PLUG, 12 | 2 | | | | | | | |
| 9 | 2 | 27241-300000 | PLUG 30 | 6 | | | | | | | |
| 12 | 2 | 119620-02020 | BOLT, METAL CAP | 8 | | | | | | | |
| 13 | 2 | 129795-02411 | BUSH, CAMSHAFT | 1 | | | | | | | |
| 14 | 2 | 124160-01910 | PLUG, PT1/4 | 1 | | | | | | | |
| 24 | 2 | 719810-02980 | BEARING, MAIN | 4 | | | | | | | 3 |
| 27 | 2 | 119810-02930 | BEARING, THRUST | 1 | | | | | | | |
| 30 | 1 | 119810-01200 | BOLT, HEAD | 14 | | | | | | | |
| 31 | 1 | 119812-01330 | GASKET, HEAD | 1 | | | | | | | |
| 32 | 1 | 119810-02870 | BEARING, 0.25 US | 4 | | | | | | | 1 |
| 35 | 1 | 119810-02940 | BEARING, THRUST 0.25 | 2 | | | | | | | 2 |
| 38 | 1 | 119802-01190 | SPACER | 1 | | | | | | | |

Remarks
(1) UNDER-SIZE(U.S=0.25)PART.
(2) OVER-SIZE(O.S=0.25)PART.
(3) REPAIR PART.

N:Old ←Yes/No→ New. Q:Old ←No/Yes→ New. R:Old ←Yes/Yes→ New. S:Old ←No/No→ New. W:Add. Z:Discontinued. F:Interchangeable by set. K:Q'ty Change

Copyright (C) YANMAR CO., LTD. All RightsReserved.

0CV10-M97100

# Fig.2. GEAR HOUSING

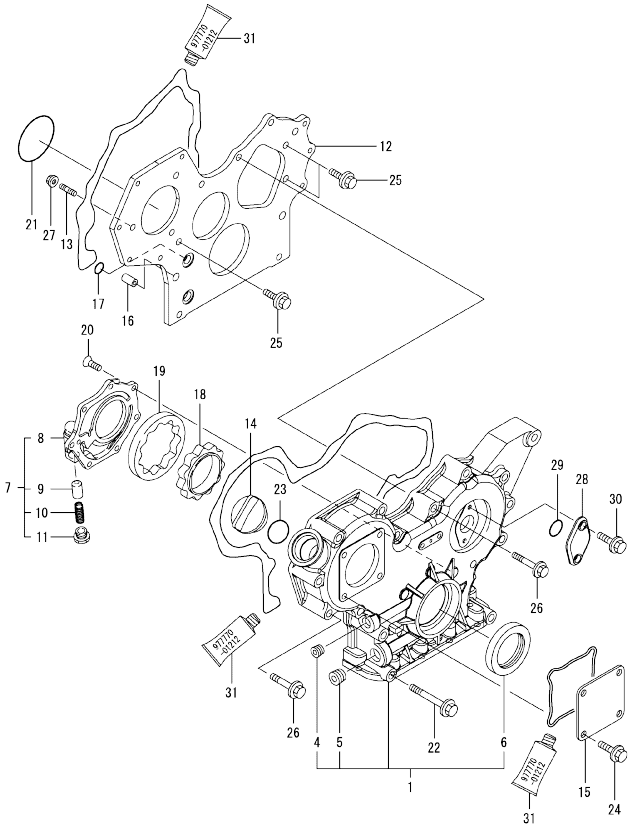


(A)=3TNV82A-DCR (D)=
(B)= (E)=
(C)= (F)=

| No. | Lev. | Parts No. | Description | Q'ty (A) | (B) | (C) | (D) | (E) | (F) | I | R |
|---|---|---|---|---|---|---|---|---|---|---|---|
| 1 | 1 | 719802-01500 | CASE ASSY, GEAR | 1 | | | | | | | |
| 4 | 2 | 23876-030000 | PLUG, R03 | 1 | | | | | | | |
| 5 | 2 | 23876-040000 | PLUG, R04 | 1 | | | | | | | |
| 6 | 2 | 129795-01800 | SEAL, OIL | 1 | | | | | | | |
| 7 | 1 | 119802-32100 | COVER ASSY | 1 | | | | | | | |
| 8 | 2 | 119802-32070 | COVER | 1 | | | | | | | |
| 9 | 2 | 129900-32130 | VALVE, RELIEF | 1 | | | | | | | |
| 10 | 2 | 129418-32320 | SPRING | 1 | | | | | | | |
| 11 | 2 | 129001-32330 | PLUG | 1 | | | | | | | |
| 12 | 1 | 119802-01520 | FLANGE, GEAR CASE | 1 | | | | | | | |
| 13 | 1 | 119802-01560 | STUD, M8X25 | 3 | | | | | | | |
| 14 | 1 | 124160-01751 | COVER, FILLER | 1 | | | | | | | |
| 15 | 1 | 124240-01871 | COVER | 1 | | | | | | | |
| 16 | 1 | 129795-01950 | PIPE, KNOCK L=18 | 2 | | | | | | | |
| 17 | 1 | 119609-32040 | O-RING, P16 | 4 | | | | | | | |
| 18 | 1 | 119802-32111 | ROTOR, INNER | 1 | | | | | | | |
| 19 | 1 | 119802-32120 | ROTOR, OUTER | 1 | | | | | | | |
| 20 | 1 | 119802-32130 | SCREW, M6X16 | 7 | | | | | | | |
| 21 | 1 | 121850-51960 | O-RING | 1 | | | | | | | |
| 22 | 1 | 129001-91841 | BOLT, M8X85 | 3 | | | | | | | |
| 23 | 1 | 24311-000320 | O-RING, 1AP32.0 | 1 | | | | | | | |
| 24 | 1 | 26106-080162 | BOLT, M8X 16 PLATED | 4 | | | | | | | |
| 25 | 1 | 26106-080162 | BOLT, M8X 16 PLATED | 3 | | | | | | | |
| 26 | 1 | 26106-080552 | BOLT, M8X 55 PLATED | 12 | | | | | | | |
| 27 | 1 | 26306-080002 | NUT, M8 | 3 | | | | | | | |
| 28 | 1 | 121023-01550 | COVER | 1 | | | | | | | |
| 29 | 1 | 24341-000240 | O-RING, 1AS24.0 | 1 | | | | | | | |
| 30 | 1 | 26106-060162 | BOLT, M6X 16 PLATED | 2 | | | | | | | |
| 31 | 1 | 977770-01212 | GASKET, LIQUID | 1 | | | | | | | 1 |

Remarks
(1) OPTIONAL PART.

N:Old ←Yes/No→ New. Q:Old ←No/Yes→ New. R:Old ←Yes/Yes→ New. S:Old ←No/No→ New. W:Add. Z:Discontinued. F:Interchangeable by set. K:Q'ty Change

Copyright (C) YANMAR CO., LTD. All RightsReserved.

0CV10-M97100

# Fig.3. MOUNTING FLANGE & OIL SUMP

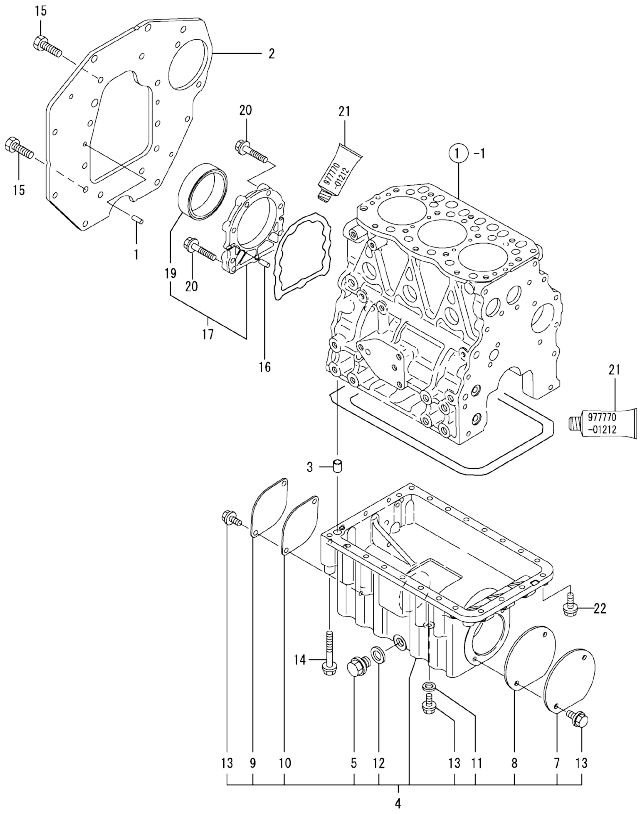


(A)=3TNV82A-DCR (D)=
(B)= (E)=
(C)= (F)=

| No. | Lev. | Parts No. | Description | Q'ty (A) | (B) | (C) | (D) | (E) | (F) | I | R |
|---|---|---|---|---|---|---|---|---|---|---|---|
| 1 | 1 | 129100-01580 | PIN, M8X16 | 2 | | | | | | | |
| 2 | 1 | 119822-01600 | FLANGE, MOUNTING | 1 | | | | | | | |
| 3 | 1 | 129555-01750 | PIPE, KNOCK 14X18 | 1 | | | | | | | |
| 4 | 1 | 119822-01780 | SUMP ASSY, OIL | 1 | | | | | | | |
| 5 | 2 | 105425-01690 | PLUG, 16 | 1 | | | | | | | |
| 7 | 2 | 119623-01720 | COVER | 1 | | | | | | | |
| 8 | 2 | 119623-01730 | GASKET | 1 | | | | | | | |
| 9 | 2 | 119822-01760 | COVER | 1 | | | | | | | |
| 10 | 2 | 119822-01770 | GASKET | 1 | | | | | | | |
| 11 | 2 | 22190-080002 | WASHER, SEAL 6 | 1 | | | | | | | |
| 12 | 2 | 22190-160002 | WASHER, SEAL 16 | 1 | | | | | | | |
| 13 | 2 | 26106-080162 | BOLT, M8X 16 PLATED | 5 | | | | | | | |
| 14 | 1 | 26106-080852 | BOLT, M8X 85 PLATED | 16 | | | | | | | |
| 15 | 1 | 26076-100222 | BOLT, 10.910X 22 | 10 | | | | | | | |
| 16 | 1 | 129100-01580 | PIN, M8X16 | 2 | | | | | | | |
| 17 | 1 | 129100-01640 | CASE ASSY, OIL SEAL | 1 | | | | | | | |
| 19 | 2 | 129795-01780 | SEAL, OIL | 1 | | | | | | | |
| 20 | 1 | 129486-01670 | BOLT, M8X30 | 9 | | | | | | | |
| 21 | 1 | 977770-01212 | GASKET, LIQUID | 1 | | | | | | | 1 |
| 22 | 1 | 26106-080252 | BOLT, M8X 25 PLATED | 6 | | | | | | | |

Remarks
(1) OPTIONAL PART.

N:Old ←Yes/No→ New. Q:Old ←No/Yes→ New, R:Old ←Yes/Yes→ New, S:Old ←No/No→ New, W:Add, Z:Discontinued, F:Interchangeable by set, K:Q'ty Change

Copyright (C) YANMAR CO., LTD. All RightsReserved.

0CV10-M97100

# Fig.4. CYLINDER HEAD & BONNET

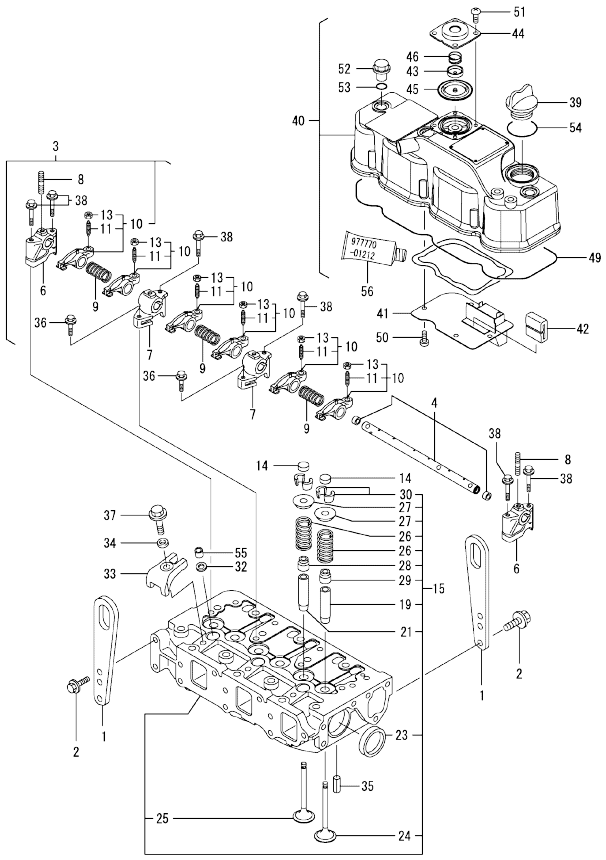


(A)=3TNV82A-DCR
(B)=
(C)=
(D)=
(E)=
(F)=

| No. | Lev. | Parts No. | Description | Q'ty (A) | (B) | (C) | (D) | (E) | (F) | I | R |
|---|---|---|---|---|---|---|---|---|---|---|---|
| 1 | 1 | 129900-07900 | LIFTER | 2 | | | | | | | |
| 2 | 1 | 26106-080142 | BOLT, M8X 14 PLATED | 4 | | | | | | | |
| 3 | 1 | 119802-11241 | SHAFT ASSY, ROCKER | 1 | | | | | | | |
| 4 | 2 | 119802-11251 | SHAFT, ROCKER ARM | 1 | | | | | | | |
| 6 | 2 | 119802-11260 | SUPPORT, ROCKER ARM | 2 | | | | | | | |
| 7 | 2 | 119802-11270 | SUPPORT, ROCKER ARM | 2 | | | | | | | |
| 8 | 2 | 119802-11280 | STUD | 3 | | | | | | | |
| 9 | 2 | 129150-11280 | SPRING | 3 | | | | | | | |
| 10 | 2 | 119802-11650 | ARM, ROCKER | 6 | | | | | | | |
| 11 | 3 | 129150-11230 | SCREW, VALVE ADJUST | 6 | | | | | | | |
| 13 | 3 | 129150-11750 | NUT, M8 | 6 | | | | | | | |
| 14 | 1 | 104211-11370 | CAP, VALVE | 6 | | | | | | | |
| 15 | 1 | 119802-11700 | HEAD ASSY, CYLINDER | 1 | | | | | | | |
| 19 | 2 | 124060-11800 | GUIDE, VALVE | 3 | | | | | | | 1 |
| 21 | 2 | 119802-11810 | GUIDE, VALVE | 3 | | | | | | | 1 |
| 23 | 2 | 27241-400000 | PLUG, 40 | 2 | | | | | | | |
| 24 | 2 | 119802-11100 | VALVE, INTAKE | 3 | | | | | | | |
| 25 | 2 | 119802-11110 | VALVE, EXHAUST | 3 | | | | | | | |
| 26 | 2 | 119810-11120 | SPRING, VALVE | 6 | | | | | | | |
| 27 | 2 | 104211-11180 | RETAINER, SPRING | 6 | | | | | | | |
| 28 | 2 | 124160-11340 | SEAL, VALVE STEM | 3 | | | | | | | |
| 29 | 2 | 124950-11340 | SEAL, VALVE STEM | 3 | | | | | | | |
| 30 | 2 | 27310-070001 | COTTER, 7 | 6 | | | | | | | |
| 32 | 1 | 119625-11880 | SEAT, NOZZLE | 3 | | | | | | | |
| 33 | 1 | 119802-11900 | RETAINER, NOZZLE | 3 | | | | | | | |
| 34 | 1 | 120270-54410 | WASHER, INJECTOR | 3 | | | | | | | |
| 35 | 1 | 22351-060012 | PIN, SPRING 6.0X12 | 2 | | | | | | | |
| 36 | 1 | 26106-080252 | BOLT, M8X 25 PLATED | 2 | | | | | | | |
| 37 | 1 | 26106-080452 | BOLT, M8X 45 PLATED | 3 | | | | | | | |
| 38 | 1 | 26106-080502 | BOLT, M8X 50 PLATED | 6 | | | | | | | |
| 39 | 1 | 124160-01751 | COVER, FILLER | 1 | | | | | | | |
| 40 | 1 | 119802-11350 | BONNET ASSY, HEAD | 1 | | | | | | | |
| 41 | 2 | 119802-03010 | PLATE | 1 | | | | | | | |
| 42 | 2 | 129150-03070 | BAFFLE, BREATHER | 1 | | | | | | | |
| 43 | 2 | 119802-03110 | PLATE | 1 | | | | | | | |
| 44 | 2 | 119802-03120 | COVER, DIAPHRAGM | 1 | | | | | | | |
| 45 | 2 | 119802-03130 | DIAPHRAGM | 1 | | | | | | | |
| 46 | 2 | 119802-03140 | SPRING, DIAPHRAGM | 1 | | | | | | | |
| 49 | 2 | 119802-11310 | GASKET, BONNET | 1 | | | | | | | |
| 50 | 2 | 22857-500100 | SCREW, 5X10 | 4 | | | | | | | |
| 51 | 2 | 22857-500100 | SCREW, 5X10 | 4 | | | | | | | |
| 52 | 1 | 124160-11360 | KNOB | 3 | | | | | | | |
| 53 | 1 | 24311-000120 | O-RING, 1AP12.0 | 3 | | | | | | | |
| 54 | 1 | 24311-000320 | O-RING, 1AP32.0 | 1 | | | | | | | |
| 55 | 1 | 119802-11870 | PROTECTOR, NOZZLE | 3 | | | | | | | |
| 56 | 1 | 977770-01212 | GASKET, LIQUID | 1 | | | | | | | 2 |

Remarks
(1) REPAIR PART.
(2) OPTIONAL PART.

N:Old ←Yes/No→ New. Q:Old ←No/Yes→ New. R:Old ←Yes/Yes→ New. S:Old ←No/No→ New. W:Add. Z:Discontinued. F:Interchangeable by set. K:Q'ty Change

Copyright (C) YANMAR CO., LTD. All RightsReserved.

0CV10-M97100

# Fig.5. SUCTION MANIFOLD

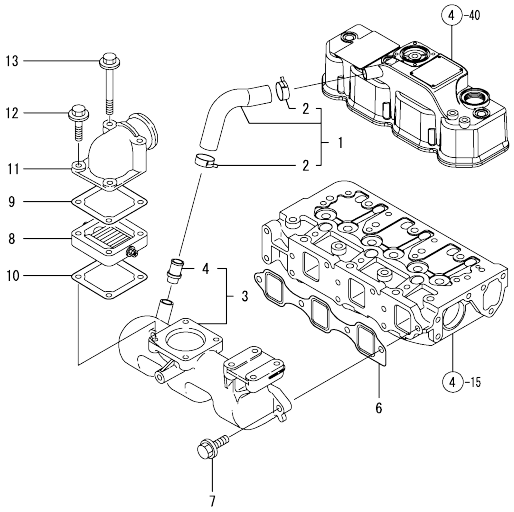


(A)=3TNV82A-DCR (D)=
(B)= (E)=
(C)= (F)=

| No. | Lev. | Parts No. | Description | Q'ty (A) | (B) | (C) | (D) | (E) | (F) | I | R |
|---|---|---|---|---|---|---|---|---|---|---|---|
| 1 | 1 | 119802-03090 | PIPE , BREATHER | 1 | | | | | | | |
| 2 | 2 | 129410-03990 | CLAMP 22 | 2 | | | | | | | |
| 3 | 1 | 119802-12140 | MANIFOLD, AIR INTAKE | 1 | | | | | | | |
| 4 | 2 | 129001-11340 | PIPE , BREATHER | 1 | | | | | | | |
| 6 | 1 | 119810-12112 | GASKET, MANIFOLD | 1 | | | | | | | |
| 7 | 1 | 26106-080252 | BOLT, M8X 25 PLATED | 4 | | | | | | | |
| 8 | 1 | 129100-77500 | HEATER, AIR 12V | 1 | | | | | | | |
| 9 | 1 | 129100-77510 | GASKET, AIR HEATER | 1 | | | | | | | |
| 10 | 1 | 129150-77511 | GASKET | 1 | | | | | | | |
| 11 | 1 | 171340-77520 | BEND | 1 | | | | | | | |
| 12 | 1 | 26106-080402 | BOLT, M8X 40 PLATED | 2 | | | | | | | |
| 13 | 1 | 26106-080802 | BOLT, M8X 80 PLATED | 2 | | | | | | | |

N:Old ←Yes/No→ New. Q:Old ←No/Yes→ New. R:Old ←Yes/Yes→ New. S:Old ←No/No→ New. W:Add. Z:Discontinued. F:Interchangeable by set. K:Q'ty Change

Copyright (C) YANMAR CO., LTD. All RightsReserved.

0CV10-M97100

# Fig.6. EXHAUST MANIFOLD

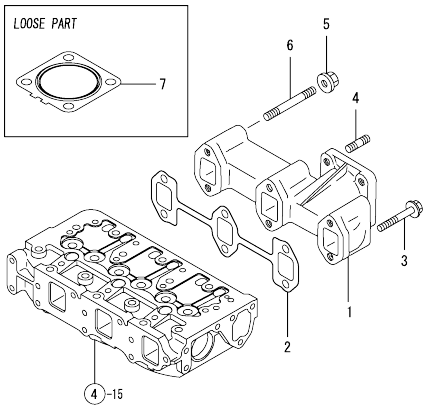


(A)=3TNV82A-DCR (D)=
(B)= (E)=
(C)= (F)=

| No. | Lev. | Parts No. | Description | Q'ty (A) | (B) | (C) | (D) | (E) | (F) | I | R |
|---|---|---|---|---|---|---|---|---|---|---|---|
| 1 | 1 | 119810-13100 | MANIFOLD, EXHAUST | 1 | | | | | | | |
| 2 | 1 | 119810-13110 | GASKET | 1 | | | | | | | |
| 3 | 1 | 119802-13640 | BOLT, M8X60 10.9T | 4 | | | | | | | |
| 4 | 1 | 119131-18320 | STUD, M8X22 | 4 | | | | | | | |
| 5 | 1 | 26306-080002 | NUT, M8 | 2 | | | | | | | |
| 6 | 1 | 119802-13740 | STUD, M8X60 | 2 | | | | | | | |
| 7 | 1 | 129004-13200 | GASKET, SILENCER | 1 | | | | | | | |

N:Old ←Yes/No→ New. Q:Old ←No/Yes→ New. R:Old ←Yes/Yes→ New. S:Old ←No/No→ New. W:Add. Z:Discontinued. F:Interchangeable by set. K:Q'ty Change

Copyright (C) YANMAR CO., LTD. All RightsReserved.

0CV10-M97100

# Fig.7. CAMSHAFT & DRIVING GEAR

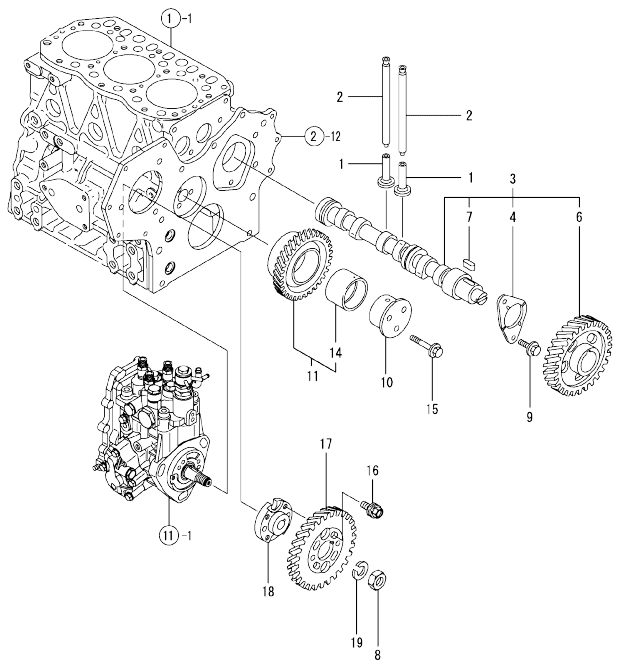


(A)=3TNV82A-DCR (D)=
(B)= (E)=
(C)= (F)=

| No. | Lev. | Parts No. | Description | Q'ty (A) | (B) | (C) | (D) | (E) | (F) | I | R |
|---|---|---|---|---|---|---|---|---|---|---|---|
| 1 | 1 | 129150-14200 | TAPPET | 6 | | | | | | | |
| 2 | 1 | 119810-14400 | ROD, PUSH | 6 | | | | | | | |
| 3 | 1 | 119802-14580 | CAMSHAFT ASSY | 1 | | | | | | | |
| 4 | 2 | 129150-02450 | BEARING, THRUST | 1 | | | | | | | |
| 6 | 2 | 129150-14101 | GEAR, CAMSHAFT | 1 | | | | | | | |
| 7 | 2 | 22512-070140 | KEY, 7X 14 | 1 | | | | | | | |
| 8 | 1 | 26776-140002 | NUT, LOCK M14 | 1 | | | | | | | |
| 9 | 1 | 26106-080142 | BOLT, M8X 14 PLATED | 2 | | | | | | | |
| 10 | 1 | 119802-25051 | SHAFT, IDLE | 1 | | | | | | | |
| 11 | 1 | 119802-25100 | GEAR ASSY, IDLE | 1 | | | | | | | |
| 14 | 2 | 119802-25070 | BUSH, IDLE GEAR | 1 | | | | | | | 1 |
| 15 | 1 | 26106-080402 | BOLT, M8X 40 PLATED | 3 | | | | | | | |
| 16 | 1 | 129150-25301 | BOLT | 4 | | | | | | | |
| 17 | 1 | 119802-25901 | GEAR, PUMP | 1 | | | | | | | |
| 18 | 1 | 158552-51151 | FLANGE | 1 | | | | | | | |
| 19 | 1 | 22217-140000 | WASHER, SPRING 14 | 1 | | | | | | | |

Remarks
(1) REPAIR PART.

N:Old ◄Yes/No► New. Q:Old ◄No/Yes► New. R:Old ◄Yes/Yes► New. S:Old ◄No/No► New. W:Add. Z:Discontinued. F:Interchangeable by set. K:Q'ty Change

Copyright (C) YANMAR CO., LTD. All RightsReserved.

0CV10-M97100

# Fig.8. CRANKSHAFT & PISTON

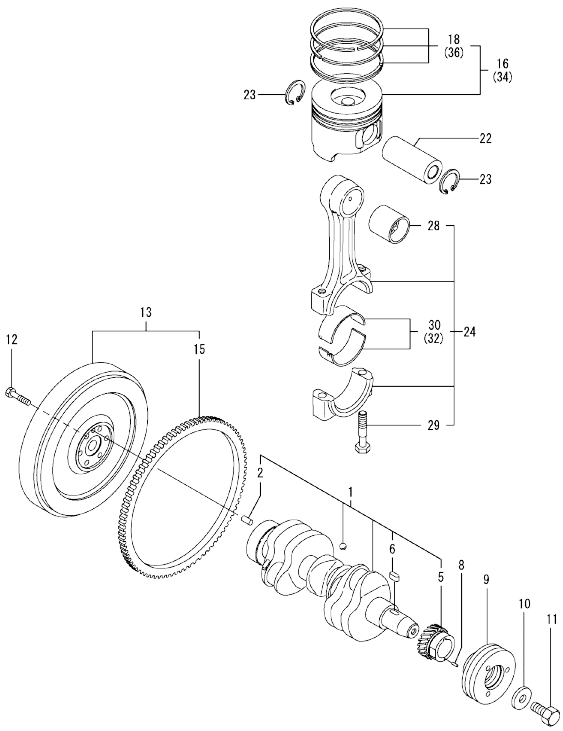


(A)=3TNV82A-DCR (D)=
(B)= (E)=
(C)= (F)=

| No. | Lev. | Parts No. | Description | Q'ty (A) | (B) | (C) | (D) | (E) | (F) | I | R |
|---|---|---|---|---|---|---|---|---|---|---|---|
| 1 | 1 | 119802-21002 | CRANKSHAFT ASSY | 1 | | | | | | | |
| 2 | 2 | 129100-01580 | PIN, M8X16 | 1 | | | | | | | |
| 5 | 2 | 119802-21202 | GEAR, CRANKSHAFT | 1 | | | | | | | |
| 6 | 2 | 22512-070140 | KEY, 7X 14 | 1 | | | | | | | |
| 8 | 1 | 22351-030010 | PIN, SPRING 3.0X10 | 1 | | | | | | | |
| 9 | 1 | 119802-21650 | V-PULLEY, 110 | 1 | | | | | | | |
| 10 | 1 | 129795-21661 | WASHER | 1 | | | | | | | |
| 11 | 1 | 121850-21680 | BOLT | 1 | | | | | | | |
| 12 | 1 | 121111-21501 | BOLT, FLYWHEEL | 6 | | | | | | | |
| 13 | 1 | 119852-21580 | FLYWHEEL ASSY | 1 | | | | | | | |
| 15 | 2 | 119865-21600 | GEAR, RING | 1 | | | | | | | |
| 16 | 1 | 119802-22080 | PISTON ASSY | 3 | | | | | | | |
| 18 | 2 | 119802-22500 | RING SET, PISTON | 3 | | | | | | | |
| 22 | 1 | 119813-22300 | PIN, PISTON | 3 | | | | | | | |
| 23 | 1 | 129792-22400 | CIRCLIP, 23 | 6 | | | | | | | |
| 24 | 1 | 719810-23100 | ROD ASSY, CONNECTING | 3 | | | | | | | |
| 28 | 2 | 119810-23910 | BEARING, PISTON PIN | 3 | | | | | | | 1 |
| 29 | 2 | 119810-23200 | BOLT, CONNECTING ROD | 6 | | | | | | | |
| 30 | 2 | 119810-23600 | BEARING, CRANK PIN | 3 | | | | | | | |
| 32 | 1 | 119810-23610 | BEARING, 0.25 US | 3 | | | | | | | 2 |
| 34 | 1 | 719802-22900 | PISTON ASSY, 0.25 OS | 3 | | | | | | | 3 |
| 36 | 2 | 719802-22950 | RING SET, 0.25 OS | 3 | | | | | | | 3 |

Remarks
(1) REPAIR PART.
(2) UNDER-SIZE(U.S=0.25)PART.
(3) OVER-SIZE(O.S=0.25)PART.

N:Old ←Yes/No→ New. Q:Old ←No/Yes→ New. R:Old ←Yes/Yes→ New. S:Old ←No/No→ New. W:Add. Z:Discontinued. F:Interchangeable by set. K:Q'ty Change

Copyright (C) YANMAR CO., LTD. All RightsReserved.

0CV10-M97100

# Fig.9. LUB.OIL SYSTEM

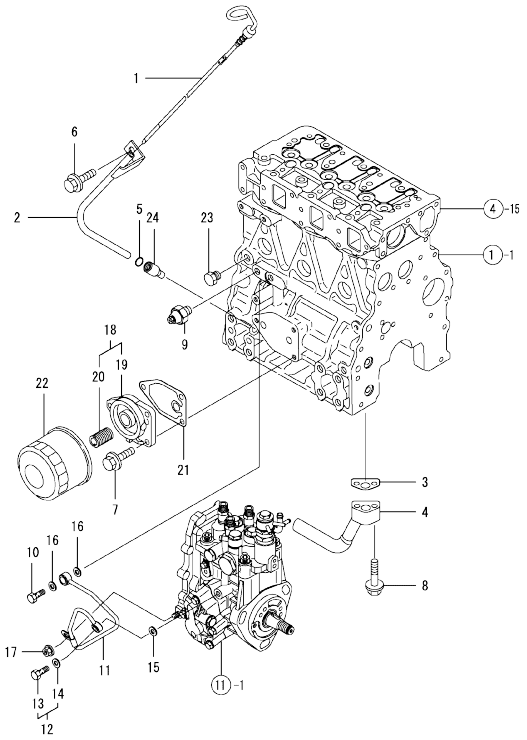


(A)=3TNV82A-DCR (D)=
(B)= (E)=
(C)= (F)=

| No. | Lev. | Parts No. | Description | Q'ty (A) | (B) | (C) | (D) | (E) | (F) | I | R |
|---|---|---|---|---|---|---|---|---|---|---|---|
| 1 | 1 | 119802-34830 | DIPSTICK, OIL | 1 | | | | | | | |
| 2 | 1 | 119802-34850 | GUIDE, DIPSTICK | 1 | | | | | | | |
| 3 | 1 | 129150-35041 | GASKET | 1 | | | | | | | |
| 4 | 1 | 119822-35081 | PIPE ASSY, OIL INLET | 1 | | | | | | | |
| 5 | 1 | 24311-240100 | O-RING, 1AP10A | 1 | | | | | | | |
| 6 | 1 | 26106-080162 | BOLT, M8X 16 PLATED | 1 | | | | | | | |
| 7 | 1 | 26106-080202 | BOLT, M8X 20 PLATED | 3 | | | | | | | |
| 8 | 1 | 26106-080352 | BOLT, M8X 35 PLATED | 2 | | | | | | | |
| 9 | 1 | 121252-39450 | SWITCH, 0.5KG | 1 | | | | | | | |
| 10 | 1 | 124160-39140 | BOLT, PIPE JOINT M10 | 1 | | | | | | | |
| 11 | 1 | 119802-39450 | PIPE ASSY, OIL | 1 | | | | | | | |
| 12 | 1 | 129005-59830 | BOLT ASSY, JOINT M8 | 1 | | | | | | | |
| 13 | 2 | 23857-030000 | BOLT, JOINT 3 | 1 | | | | | | | |
| 14 | 2 | 22190-080002 | WASHER, SEAL 6 | 1 | | | | | | | |
| 15 | 1 | 22190-080002 | WASHER, SEAL 6 | 1 | | | | | | | |
| 16 | 1 | 22190-100002 | WASHER, SEAL 10 | 2 | | | | | | | |
| 17 | 1 | 26366-060002 | NUT, M6 | 1 | | | | | | | |
| 18 | 1 | 119802-35100 | BRACKET ASSY, FILTER | 1 | | | | | | | |
| 19 | 2 | 119802-35110 | BRACKET, FILTER | 1 | | | | | | | |
| 20 | 2 | 129100-35140 | STUD | 1 | | | | | | | |
| 21 | 1 | 129150-35111 | GASKET | 1 | | | | | | | |
| 22 | 1 | 129150-35153 | FILTER 80X80L | 1 | | | | | | | 1 |
| 23 | 1 | 171056-49120 | PLUG, DRAIN | 1 | | | | | | | |
| 24 | 1 | 119260-34810 | GUIDE, DIPSTICK | 1 | | | | | | | |

Remarks
(1) REPAIR PART.

N:Old ←Yes/No→ New. Q:Old ←No/Yes→ New. R:Old ←Yes/Yes→ New. S:Old ←No/No→ New. W:Add. Z:Discontinued. F:Interchangeable by set. K:Q'ty Change

Copyright (C) YANMAR CO., LTD. All RightsReserved.

0CV10-M97100

# Fig.10. COOLING WATER SYSTEM

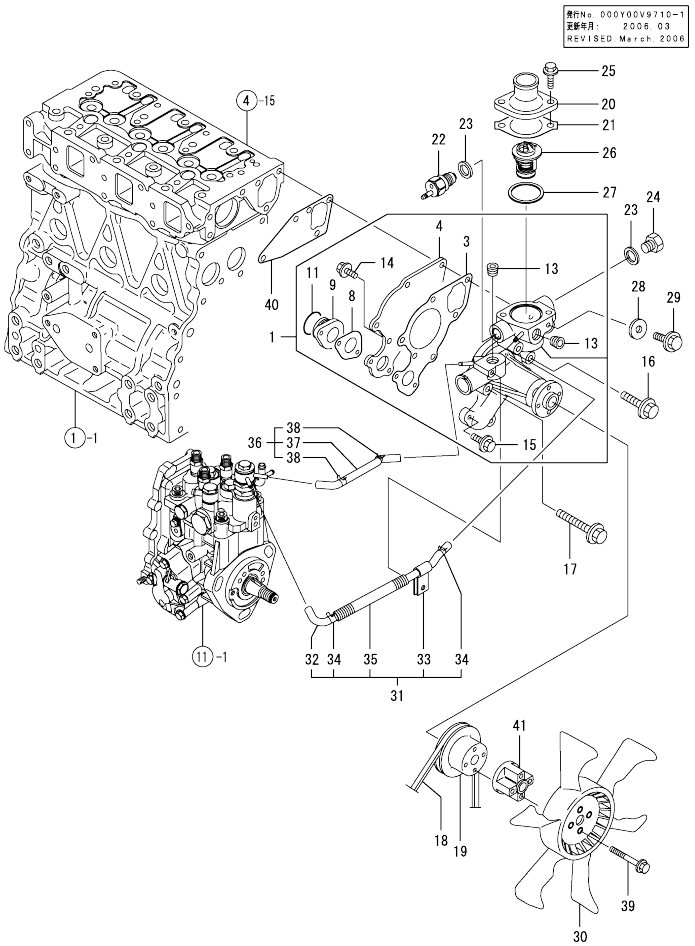


(A)=3TNV82A-DCR (D)=
(B)= (E)=
(C)= (F)=

| No. | Lev. | Parts No. | Description | Q'ty (A) | (B) | (C) | (D) | (E) | (F) | I | R |
|---|---|---|---|---|---|---|---|---|---|---|---|
| 1 | 1 | 119802-42000 | PUMP ASSY, WATER | 1 | | | | | | | |
| 3 | 2 | 119810-42051 | GASKET, WATER PUMP | 1 | | | | | | | |
| 4 | 2 | 119810-42120 | PLATE | 1 | | | | | | | |
| 8 | 2 | 119810-42281 | GASKET, WATER PUMP | 1 | | | | | | | |
| 9 | 2 | 119810-42290 | PIPE | 1 | | | | | | | |
| 11 | 2 | 129150-42320 | O-RING | 1 | | | | | | | |
| 13 | 2 | 23876-030000 | PLUG, R03 | 2 | | | | | | | |
| 14 | 2 | 26106-060142 | BOLT, M6X 14 PLATED | 2 | | | | | | | |
| 15 | 2 | 26106-060202 | BOLT, M6X 20 PLATED | 2 | | | | | | | |
| 16 | 1 | 26106-080352 | BOLT, M8X 35 PLATED | 1 | | | | | | | |
| 17 | 1 | 26106-080552 | BOLT, M8X 55 PLATED | 3 | | | | | | | |
| 18 | 1 | 25132-003800 | V-BELT, A38 | 1 | | | | | | | |
| 19 | 1 | 129556-42350 | V-PULLEY, 96 | 1 | | | | | | | |
| 20 | 1 | 129350-49530 | COVER, THERMOSTAT | 1 | | | | | | | |
| 21 | 1 | 129795-49551 | GASKET | 1 | | | | | | | |
| 22 | 1 | 121250-44901 | SWITCH, 110 | 1 | | | | | | | |
| 23 | 1 | 124465-44950 | GASKET, 16 | 2 | | | | | | | |
| 24 | 1 | 121450-42450 | PLUG, M16 | 1 | | | | | | | |
| 25 | 1 | 26106-080222 | BOLT, M8X 22 PLATED | 2 | | | | | | | |
| 26 | 1 | 129155-49801 | THERMOSTAT, 71 | 1 | | | | | | | |
| 27 | 1 | 129150-49811 | GASKET, THERMOSTAT | 1 | | | | | | | |
| 28 | 1 | 23414-080000 | GASKET, 8X1.0 | 1 | | | | | | | |
| 29 | 1 | 26106-080122 | BOLT, M8X 12 PLATED | 1 | | | | | | | |
| 30 | 1 | 129432-44740 | FAN, COOLING D370XEF | 1 | | | | | | | |
| 31 | 1 | 119802-49610 | PIPE ASSY, WATER | 1 | | | | | | | |
| 32 | 2 | 119802-49711 | PIPE ASSY, WATER | 1 | | | | | | | |
| 33 | 2 | 119802-49730 | RETAINER, PIPE | 1 | | | | | | | |
| 34 | 2 | 124722-59050 | CLIP, HOSE 9 | 2 | | | | | | | |
| 35 | 2 | 119802-59320 | TUBE, CORRUGATED | 1 | | | | | | | |
| 36 | 1 | 119802-49620 | PIPE ASSY, WATER | 1 | | | | | | | |
| 37 | 2 | 119802-49721 | PIPE ASSY, WATER | 1 | | | | | | | |
| 38 | 2 | 124722-59050 | CLIP, HOSE 9 | 2 | | | | | | | |
| 39 | 1 | 26106-060502 | BOLT, M6X 50 PLATED | 4 | | | | | | | |
| 40 | 1 | 129486-42050 | GASKET, WATER PUMP | 1 | | | | | | | |
| 41 | 1 | 129030-44760 | SPACER, FAN L38.5 | 1 | | | | | | | |

N:Old ←Yes/No→ New. Q:Old ←No/Yes→ New. R:Old ←Yes/Yes→ New. S:Old ←No/No→ New. W:Add. Z:Discontinued. F:Interchangeable by set. K:Q'ty Change

Copyright (C) YANMAR CO., LTD. All RightsReserved.

0CV10-M97100

# Fig.11. FUEL INJECTION PUMP

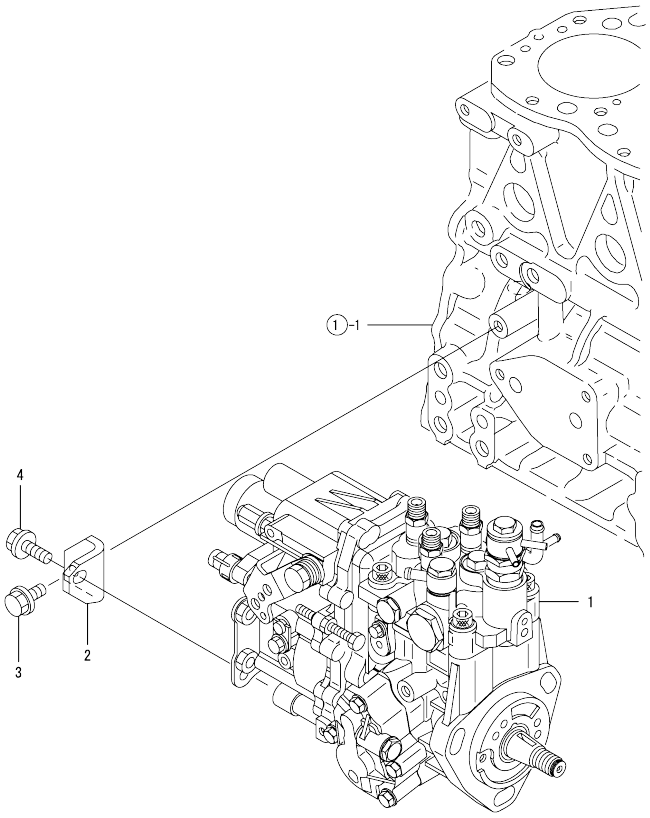


(A)=3TNV82A-DCR (D)=
(B)= (E)=
(C)= (F)=

| No. | Lev. | Parts No. | Description | Q'ty (A) | (B) | (C) | (D) | (E) | (F) | I | R |
|---|---|---|---|---|---|---|---|---|---|---|---|
| 1 | 1 | 719944-51301 | PUMP ASSY, INJECTION | 1 | | | | | | | |
| 2 | 1 | 119802-51250 | RETAINER, PUMP | 1 | | | | | | | |
| 3 | 1 | 26106-080162 | BOLT, M8X 16 PLATED | 1 | | | | | | | |
| 4 | 1 | 26106-080202 | BOLT, M8X 20 PLATED | 1 | | | | | | | |

N:Old ←Yes/No→ New. Q:Old ←No/Yes→ New. R:Old ←Yes/Yes→ New. S:Old ←No/No→ New. W:Add. Z:Discontinued. F:Interchangeable by set. K:Q'ty Change

Copyright (C) YANMAR CO., LTD. All RightsReserved.

0CV10-M97100

# Fig.12. FUEL INJECTION VALVE

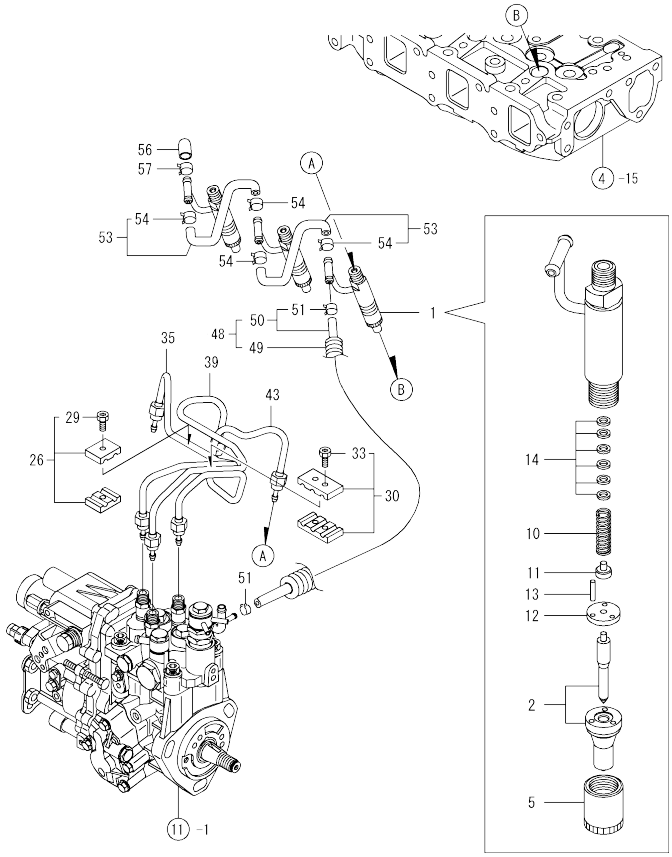


(A)=3TNV82A-DCR (D)=
(B)= (E)=
(C)= (F)=

| No. | Lev. | Parts No. | Description | Q'ty (A) | (B) | (C) | (D) | (E) | (F) | I | R |
|---|---|---|---|---|---|---|---|---|---|---|---|
| 1 | 1 | 719802-53101 | VALVE ASSY,INJECTION | 3 | | | | | | | |
| 2 | 2 | 119802-53001 | VALVE ASSY,INJECTION | 3 | | | | | | | |
| 5 | 2 | 114250-53080 | NUT, NOZZLE D16.95 | 3 | | | | | | | |
| 10 | 2 | 114250-53120 | SPRING, NOZZLE | 3 | | | | | | | |
| 11 | 2 | 114250-53130 | SEAT, SPRING | 3 | | | | | | | |
| 12 | 2 | 114250-53140 | PLATE | 3 | | | | | | | |
| 13 | 2 | 114250-53210 | PIN | 6 | | | | | | | |
| 14 | 2 | 114250-53400 | SHIM SET | 3 | | | | | | | |
| 26 | 1 | 119305-59120 | RETAINER, PIPE | 1 | | | | | | | |
| 29 | 2 | 129150-59131 | BOLT, M4X14 | 1 | | | | | | | |
| 30 | 1 | 129150-59120 | RETAINER, PIPE | 1 | | | | | | | |
| 33 | 2 | 129150-59131 | BOLT, M4X14 | 2 | | | | | | | |
| 35 | 1 | 119802-59960 | PIPE ASSY, INJECTION | 1 | | | | | | | |
| 39 | 1 | 119802-59970 | PIPE ASSY, INJECTION | 1 | | | | | | | |
| 43 | 1 | 119802-59980 | PIPE ASSY, INJECTION | 1 | | | | | | | |
| 48 | 1 | 129263-59550 | PIPE ASSY, RETURN | 1 | | | | | | | |
| 49 | 2 | 129486-59320 | TUBE, CORRUGATED | 1 | | | | | | | |
| 50 | 2 | 119802-59550 | PIPE ASSY, RETURN | 1 | | | | | | | |
| 51 | 3 | 124722-59050 | CLIP, HOSE 9 | 2 | | | | | | | |
| 53 | 1 | 129486-59551 | PIPE ASSY, RETURN | 2 | | | | | | | |
| 54 | 2 | 124722-59050 | CLIP, HOSE 9 | 4 | | | | | | | |
| 56 | 1 | 119593-59580 | CAP | 1 | | | | | | | |
| 57 | 1 | 124060-77680 | CLIP, HOSE 10 | 1 | | | | | | | |

N:Old ←Yes/No→ New. Q:Old ←No/Yes→ New. R:Old ←Yes/Yes→ New. S:Old ←No/No→ New. W:Add. Z:Discontinued. F:Interchangeable by set. K:Q'ty Change

Copyright (C) YANMAR CO., LTD. All RightsReserved.

0CV10-M97100

# Fig.13. FUEL LINE

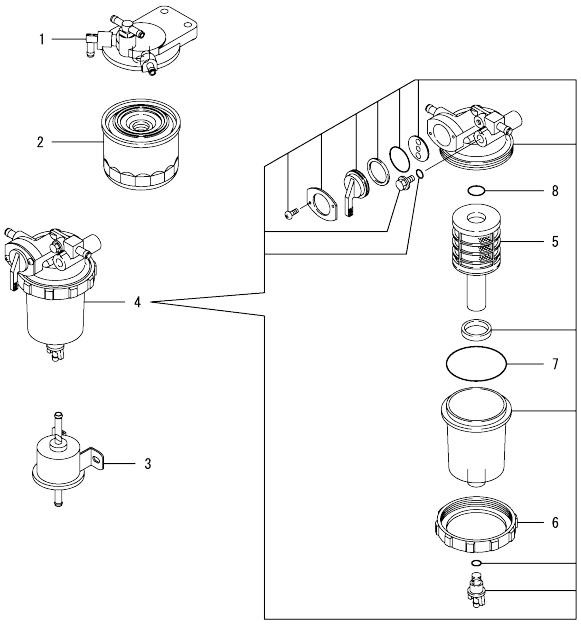


(A)=3TNV82A-DCR (D)=
(B)= (E)=
(C)= (F)=

| No. | Lev. | Parts No. | Description | Q'ty (A) | (B) | (C) | (D) | (E) | (F) | I | R |
|---|---|---|---|---|---|---|---|---|---|---|---|
| 1 | 1 | 129004-55610 | BRACKET, FILTER | 1 | | | | | | | |
| 2 | 1 | 119802-55800 | FILTER, FUEL | 1 | | | | | | | |
| 3 | 1 | 119225-52102 | PUMP ASSY, FUEL FEED | 1 | | | | | | | |
| 4 | 1 | 119802-55700 | SEPARATOR ASSY | 1 | | | | | | | |
| 5 | 2 | 119802-55710 | ELEMENT | 1 | | | | | | | |
| 6 | 2 | 129100-55690 | RING, RETAINING | 1 | | | | | | | |
| 7 | 2 | 24321-000650 | O-RING, 1AG65.0 | 1 | | | | | | | |
| 8 | 2 | 24311-000160 | O-RING, 1AP16.0 | 1 | | | | | | | |

N:Old ←Yes/No→ New. Q:Old ←No/Yes→ New, R:Old ←Yes/Yes→ New. S:Old ←No/No→ New. W:Add. Z:Discontinued. F:Interchangeable by set. K:Q'ty Change

Copyright (C) YANMAR CO., LTD. All RightsReserved.

0CV10-M97100

# Fig.14. STARTING MOTOR

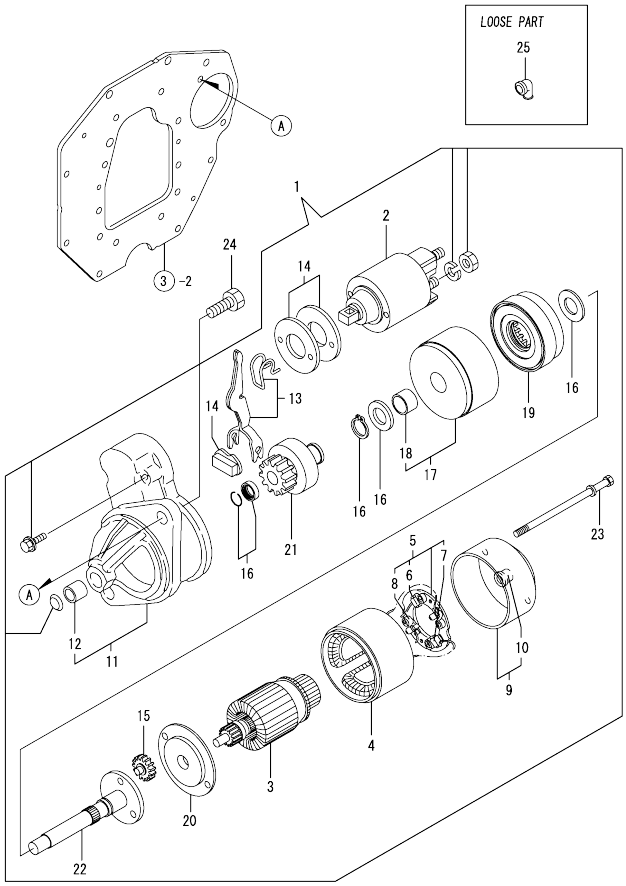


(A)=3TNV82A-DCR (D)=
(B)= (E)=
(C)= (F)=

| No. | Lev. | Parts No. | Description | Q'ty (A) | (B) | (C) | (D) | (E) | (F) | I | R |
|---|---|---|---|---|---|---|---|---|---|---|---|
| 1 | 1 | 129608-77010 | STARTER, S114-817A | 1 | | | | | | | |
| 2 | 2 | 129698-77020 | MAGNETIC SWITCH ASSY | 1 | | | | | | | |
| 3 | 2 | 129698-77101 | ARMATURE ASSY | 1 | | | | | | | |
| 4 | 2 | 129608-77110 | YOKE ASSY | 1 | | | | | | | |
| 5 | 2 | 129698-77120 | HOLDER ASSY, BRUSH | 1 | | | | | | | |
| 6 | 3 | 129698-77140 | BRUSH(+) SET | 1 | | | | | | | |
| 7 | 3 | 129698-77130 | BRUSH (-) | 2 | | | | | | | |
| 8 | 3 | 129698-77150 | SPRING, BRUSH | 4 | | | | | | | |
| 9 | 2 | 129698-77161 | COVER ASSY | 1 | | | | | | | |
| 10 | 3 | 129698-77170 | BEARING | 1 | | | | | | | |
| 11 | 2 | 129698-77260 | HOUSING ASSY, GEARS | 1 | | | | | | | |
| 12 | 3 | X2114535200 | METAL, STARTER | 1 | | | | | | | |
| 13 | 2 | 129698-77270 | LEVER SET, SHIFT | 1 | | | | | | | |
| 14 | 2 | 129698-77280 | COVER KIT | 1 | | | | | | | |
| 15 | 2 | 129698-77240 | GEAR | 3 | | | | | | | |
| 16 | 2 | 129698-77250 | WASHER SET | 1 | | | | | | | |
| 17 | 2 | 129698-77180 | BRACKET | 1 | | | | | | | |
| 18 | 3 | 129698-77190 | BRACKET | 1 | | | | | | | |
| 19 | 2 | 129698-77200 | GEAR, INTERNAL | 1 | | | | | | | |
| 20 | 2 | 129698-77210 | BRACKET | 1 | | | | | | | |
| 21 | 2 | 129698-77220 | PINION ASSY | 1 | | | | | | | |
| 22 | 2 | 129698-77230 | SHAFT(PINION | 1 | | | | | | | |
| 23 | 2 | 124195-77770 | THROUGH BOLT | 2 | | | | | | | |
| 24 | 1 | 26116-120252 | BOLT, M12X 25 PLATED | 2 | | | | | | | |
| 25 | 1 | 124550-77030 | COVER, TERMINAL | 1 | | | | | | | |

N:Old ←Yes/No→ New. Q:Old ←No/Yes→ New. R:Old ←Yes/Yes→ New. S:Old ←No/No→ New. W:Add. Z:Discontinued. F:Interchangeable by set. K:Q'ty Change

Copyright (C) YANMAR CO., LTD. All RightsReserved.

0CV10-M97100

# Fig.15. GENERATOR

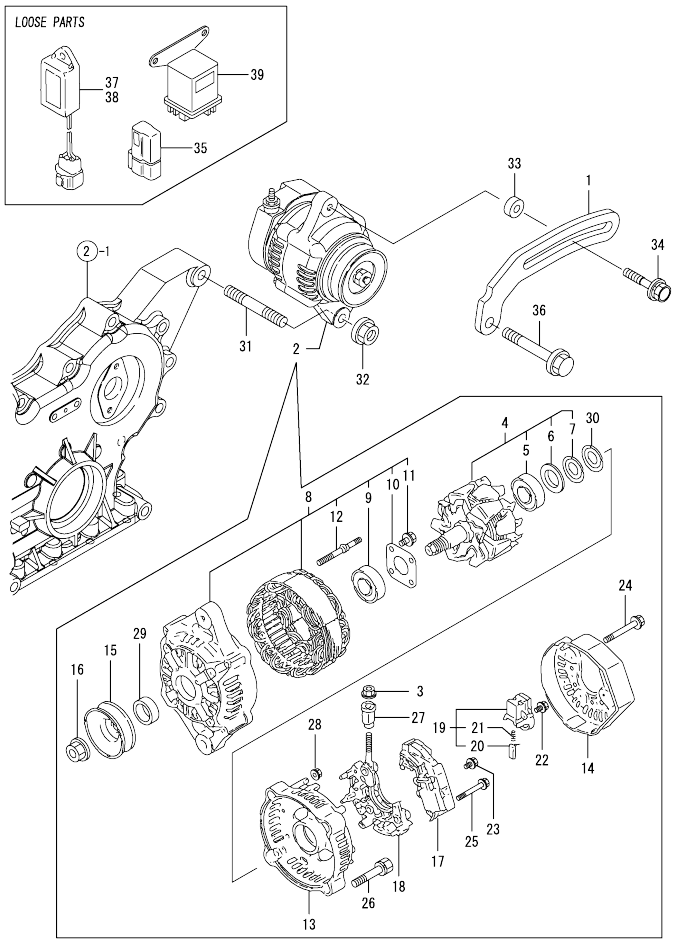


(A)=3TNV82A-DCR (D)=
(B)= (E)=
(C)= (F)=

| No. | Lev. | Parts No. | Description | Q'ty (A) | (B) | (C) | (D) | (E) | (F) | I | R |
|---|---|---|---|---|---|---|---|---|---|---|---|
| 1 | 1 | 119940-77330 | ADJUSTER | 1 | | | | | | | |
| 2 | 1 | 129423-77200 | GENERATOR, 12V-40A | 1 | | | | | | | |
| 3 | 2 | X9490561001 | NUT | 1 | | | | | | | |
| 4 | 2 | 119620-77380 | ROTOR ASSY | 1 | | | | | | | |
| 5 | 3 | 119620-79240 | BALL BEARING | 1 | | | | | | | |
| 6 | 3 | 119620-79250 | COVER, BEARING | 1 | | | | | | | |
| 7 | 3 | 119620-79360 | WASHER, THRUST | 1 | | | | | | | |
| 8 | 2 | 119620-77421 | FRAME ASSY, DRIVE | 1 | | | | | | | |
| 9 | 3 | 119620-79200 | BALL BEARING | 1 | | | | | | | |
| 10 | 3 | 119620-79210 | PLATE | 1 | | | | | | | |
| 11 | 3 | 119620-79220 | SCREW | 4 | | | | | | | |
| 12 | 3 | 119620-79230 | BOLT, STUD | 2 | | | | | | | |
| 13 | 2 | 119620-77440 | FLAME ASSY, REAR | 1 | | | | | | | |
| 14 | 2 | 129240-79300 | COVER | 1 | | | | | | | |
| 15 | 2 | 119620-77461 | PULLEY | 1 | | | | | | | |
| 16 | 2 | 119620-77471 | NUT | 1 | | | | | | | |
| 17 | 2 | 129423-77710 | REGULATOR ASSY | 1 | | | | | | | |
| 18 | 2 | 119620-79260 | HOLDER | 1 | | | | | | | |
| 19 | 2 | 119620-79270 | HOLDER, BRUSH | 1 | | | | | | | |
| 20 | 3 | 119620-77480 | BRUSH ASSY | 2 | | | | | | | |
| 21 | 3 | 119620-79280 | SPRING | 2 | | | | | | | |
| 22 | 2 | 119620-79290 | SCREW | 1 | | | | | | | |
| 23 | 2 | 119620-79300 | SCREW | 1 | | | | | | | |
| 24 | 2 | 119620-79310 | BOLT | 3 | | | | | | | |
| 25 | 2 | 119620-79320 | SCREW W/WASHER | 2 | | | | | | | |
| 26 | 2 | 119620-79330 | BOLT | 2 | | | | | | | |
| 27 | 2 | 119620-79340 | INSULATION BUSH | 1 | | | | | | | |
| 28 | 2 | 119620-79350 | NUT | 2 | | | | | | | |
| 29 | 2 | 119620-77490 | COLLAR | 1 | | | | | | | |
| 30 | 2 | 119620-79360 | WASHER, THRUST | 1 | | | | | | | |
| 31 | 1 | 129795-01900 | STUD | 1 | | | | | | | |
| 32 | 1 | 26306-100002 | NUT, M10 | 1 | | | | | | | |
| 33 | 1 | 119940-77270 | SPACER, GENERATOR | 1 | | | | | | | |
| 34 | 1 | 119802-77340 | BOLT, ADJUSTER | 1 | | | | | | | |
| 35 | 1 | 119643-66900 | DIODE | 1 | | | | | | | |
| 36 | 1 | 26106-080452 | BOLT, M8X 45 PLATED | 1 | | | | | | | |
| 37 | 1 | 128300-77920 | TIMER | 1 | | | | | | | |
| 38 | 1 | 129211-77920 | TIMER | 1 | | | | | | | |
| 39 | 1 | 119650-77910 | RELAY ASSY, GLOW | 1 | | | | | | | |

N:Old ←Yes/No→ New. Q:Old ←No/Yes→ New. R:Old ←Yes/Yes→ New. S:Old ←No/No→ New. W:Add. Z:Discontinued. F:Interchangeable by set. K:Q'ty Change

Copyright (C) YANMAR CO., LTD. All RightsReserved.

0CV10-M97100

# Fig.16. GASKET SET

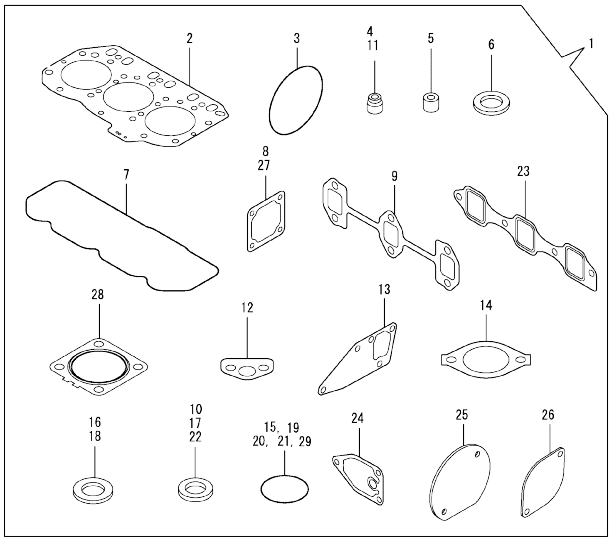


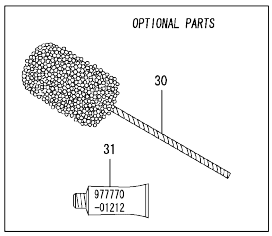


(A)=3TNV82A-DCR (D)=
(B)= (E)=
(C)= (F)=

| No. | Lev. | Parts No. | Description | Q'ty (A) | (B) | (C) | (D) | (E) | (F) | I | R |
|---|---|---|---|---|---|---|---|---|---|---|---|
| 1 | 1 | 719823-92800 | GASKET SET | 1 | | | | | | | 1 |
| 2 | 2 | 119812-01330 | GASKET, HEAD | 1 | | | | | | | |
| 3 | 2 | 121850-51960 | O-RING | 1 | | | | | | | |
| 4 | 2 | 124950-11340 | SEAL, VALVE STEM | 3 | | | | | | | |
| 5 | 2 | 119802-11870 | PROTECTOR, NOZZLE | 3 | | | | | | | |
| 6 | 2 | 119625-11880 | SEAT, NOZZLE | 3 | | | | | | | |
| 7 | 2 | 119802-11310 | GASKET, BONNET | 1 | | | | | | | |
| 8 | 2 | 129150-77511 | GASKET | 1 | | | | | | | |
| 9 | 2 | 119810-13110 | GASKET | 1 | | | | | | | |
| 10 | 2 | 22190-160002 | WASHER, SEAL 16 | 1 | | | | | | | |
| 11 | 2 | 124160-11340 | SEAL, VALVE STEM | 3 | | | | | | | |
| 12 | 2 | 129150-35041 | GASKET | 1 | | | | | | | |
| 13 | 2 | 129486-42050 | GASKET, WATER PUMP | 1 | | | | | | | |
| 14 | 2 | 129795-49551 | GASKET | 1 | | | | | | | |
| 15 | 2 | 119609-32040 | O-RING, P16 | 4 | | | | | | | |
| 16 | 2 | 23414-080000 | GASKET, 8X1.0 | 1 | | | | | | | |
| 17 | 2 | 22190-080002 | WASHER, SEAL 6 | 3 | | | | | | | |
| 18 | 2 | 124465-44950 | GASKET, 16 | 2 | | | | | | | |
| 19 | 2 | 24311-000120 | O-RING, 1AP12.0 | 3 | | | | | | | |
| 20 | 2 | 24311-000320 | O-RING, 1AP32.0 | 2 | | | | | | | |
| 21 | 2 | 24341-000240 | O-RING, 1AS24.0 | 1 | | | | | | | |
| 22 | 2 | 22190-100002 | WASHER, SEAL 10 | 2 | | | | | | | |
| 23 | 2 | 119810-12112 | GASKET, MANIFOLD | 1 | | | | | | | |
| 24 | 2 | 129150-35111 | GASKET | 1 | | | | | | | |
| 25 | 2 | 119623-01730 | GASKET | 1 | | | | | | | |
| 26 | 2 | 119822-01770 | GASKET | 1 | | | | | | | |
| 27 | 2 | 129100-77510 | GASKET, AIR HEATER | 1 | | | | | | | |
| 28 | 2 | 129004-13200 | GASKET, SILENCER | 1 | | | | | | | |
| 29 | 2 | 24311-240100 | O-RING, 1AP10A | 1 | | | | | | | |
| 30 | 1 | 129400-92420 | FLEX HORN | 1 | | | | | | | 1 |
| 31 | 1 | 977770-01212 | GASKET, LIQUID | 1 | | | | | | | 1 |

Remarks
(1) OPTIONAL PART.

N:Old $\frac{\text{Yes}}{\text{No}}$ New. Q:Old $\frac{\text{No}}{\text{Yes}}$ New. R:Old $\frac{\text{Yes}}{\text{Yes}}$ New. S:Old $\frac{\text{No}}{\text{No}}$ New. W:Add. Z:Discontinued. F:Interchangeable by set. K:Q'ty Change

Copyright (C) YANMAR CO., LTD. All RightsReserved.

# Parts No. Index

| Parts No. | Fig. No. | Ref. No. |
|---|---|---|
| 104211-11180 | 4 | 27 |
| 104211-11370 | 4 | 14 |
| 105425-01690 | 3 | 5 |
| 114250-53080 | 12 | 5 |
| 114250-53120 | 12 | 10 |
| 114250-53130 | 12 | 11 |
| 114250-53140 | 12 | 12 |
| 114250-53210 | 12 | 13 |
| 114250-53400 | 12 | 14 |
| 119131-18320 | 6 | 4 |
| 119225-52102 | 13 | 3 |
| 119260-34810 | 9 | 24 |
| 119305-59120 | 12 | 26 |
| 119593-59580 | 12 | 56 |
| 119609-32040 | 2 | 17 |
| | 16 | 15 |
| 119620-02020 | 1 | 12 |
| 119620-77380 | 15 | 4 |
| 119620-77421 | 15 | 8 |
| 119620-77440 | 15 | 13 |
| 119620-77461 | 15 | 15 |
| 119620-77471 | 15 | 16 |
| 119620-77480 | 15 | 20 |
| 119620-77490 | 15 | 29 |
| 119620-79200 | 15 | 9 |
| 119620-79210 | 15 | 10 |
| 119620-79220 | 15 | 11 |
| 119620-79230 | 15 | 12 |
| 119620-79240 | 15 | 5 |
| 119620-79250 | 15 | 6 |
| 119620-79260 | 15 | 18 |
| 119620-79270 | 15 | 19 |
| 119620-79280 | 15 | 21 |
| 119620-79290 | 15 | 22 |
| 119620-79300 | 15 | 23 |
| 119620-79310 | 15 | 24 |
| 119620-79320 | 15 | 25 |
| 119620-79330 | 15 | 26 |
| 119620-79340 | 15 | 27 |
| 119620-79350 | 15 | 28 |
| 119620-79360 | 15 | 7 |
| | | 30 |
| 119623-01720 | 3 | 7 |
| 119623-01730 | 3 | 8 |
| | 16 | 25 |
| 119625-11880 | 4 | 32 |
| | 16 | 6 |
| 119643-66900 | 15 | 35 |
| 119650-77910 | 15 | 39 |
| 119802-01190 | 1 | 38 |

| Parts No. | Fig. No. | Ref. No. |
|---|---|---|
| 119802-01520 | 2 | 12 |
| 119802-01560 | 2 | 13 |
| 119802-03010 | 4 | 41 |
| 119802-03090 | 5 | 1 |
| 119802-03110 | 4 | 43 |
| 119802-03120 | 4 | 44 |
| 119802-03130 | 4 | 45 |
| 119802-03140 | 4 | 46 |
| 119802-11100 | 4 | 24 |
| 119802-11110 | 4 | 25 |
| 119802-11241 | 4 | 3 |
| 119802-11251 | 4 | 4 |
| 119802-11260 | 4 | 6 |
| 119802-11270 | 4 | 7 |
| 119802-11280 | 4 | 8 |
| 119802-11310 | 4 | 49 |
| | 16 | 7 |
| 119802-11350 | 4 | 40 |
| 119802-11650 | 4 | 10 |
| 119802-11700 | 4 | 15 |
| 119802-11810 | 4 | 21 |
| 119802-11870 | 4 | 55 |
| | 16 | 5 |
| 119802-11900 | 4 | 33 |
| 119802-12140 | 5 | 3 |
| 119802-13640 | 6 | 3 |
| 119802-13740 | 6 | 6 |
| 119802-14580 | 7 | 3 |
| 119802-21002 | 8 | 1 |
| 119802-21202 | 8 | 5 |
| 119802-21650 | 8 | 9 |
| 119802-22080 | 8 | 16 |
| 119802-22500 | 8 | 18 |
| 119802-25051 | 7 | 10 |
| 119802-25070 | 7 | 14 |
| 119802-25100 | 7 | 11 |
| 119802-25901 | 7 | 17 |
| 119802-32070 | 2 | 8 |
| 119802-32100 | 2 | 7 |
| 119802-32111 | 2 | 18 |
| 119802-32120 | 2 | 19 |
| 119802-32130 | 2 | 20 |
| 119802-34830 | 9 | 1 |
| 119802-34850 | 9 | 2 |
| 119802-35100 | 9 | 18 |
| 119802-35110 | 9 | 19 |
| 119802-39450 | 9 | 11 |
| 119802-42000 | 10 | 1 |
| 119802-49610 | 10 | 31 |
| 119802-49620 | 10 | 36 |

| Parts No. | Fig. No. | Ref. No. |
|---|---|---|
| 119802-49711 | 10 | 32 |
| 119802-49721 | 10 | 37 |
| 119802-49730 | 10 | 33 |
| 119802-51250 | 11 | 2 |
| 119802-53001 | 12 | 2 |
| 119802-55700 | 13 | 4 |
| 119802-55710 | 13 | 5 |
| 119802-55800 | 13 | 2 |
| 119802-59320 | 10 | 35 |
| 119802-59550 | 12 | 50 |
| 119802-59960 | 12 | 35 |
| 119802-59970 | 12 | 39 |
| 119802-59980 | 12 | 43 |
| 119802-77340 | 15 | 34 |
| 119810-01200 | 1 | 30 |
| 119810-02870 | 1 | 32 |
| 119810-02930 | 1 | 27 |
| 119810-02940 | 1 | 35 |
| 119810-11120 | 4 | 26 |
| 119810-12112 | 5 | 6 |
| | 16 | 23 |
| 119810-13100 | 6 | 1 |
| 119810-13110 | 6 | 2 |
| | 16 | 9 |
| 119810-14400 | 7 | 2 |
| 119810-23200 | 8 | 29 |
| 119810-23600 | 8 | 30 |
| 119810-23610 | 8 | 32 |
| 119810-23910 | 8 | 28 |
| 119810-42051 | 10 | 3 |
| 119810-42120 | 10 | 4 |
| 119810-42281 | 10 | 8 |
| 119810-42290 | 10 | 9 |
| 119812-01330 | 1 | 31 |
| | 16 | 2 |
| 119813-22300 | 8 | 22 |
| 119822-01600 | 3 | 2 |
| 119822-01760 | 3 | 9 |
| 119822-01770 | 3 | 10 |
| | 16 | 26 |
| 119822-01780 | 3 | 4 |
| 119822-35081 | 9 | 4 |
| 119852-21580 | 8 | 13 |
| 119865-21600 | 8 | 15 |
| 119940-77270 | 15 | 33 |
| 119940-77330 | 15 | 1 |
| 120270-54410 | 4 | 34 |
| 121023-01550 | 2 | 28 |
| 121111-21501 | 8 | 12 |
| 121250-44901 | 10 | 22 |

| Parts No. | Fig. No. | Ref. No. |
|---|---|---|
| 121252-39450 | 9 | 9 |
| 121450-42450 | 10 | 24 |
| 121850-21680 | 8 | 11 |
| 121850-51960 | 2 | 21 |
| | 16 | 3 |
| 124060-01050 | 1 | 6 |
| 124060-11800 | 4 | 19 |
| 124060-77680 | 12 | 57 |
| 124160-01751 | 2 | 14 |
| | 4 | 39 |
| 124160-01910 | 1 | 4 |
| | | 14 |
| 124160-11340 | 4 | 28 |
| | 16 | 11 |
| 124160-11360 | 4 | 52 |
| 124160-39140 | 9 | 10 |
| 124195-77770 | 14 | 23 |
| 124240-01871 | 2 | 15 |
| 124465-44950 | 10 | 23 |
| | 16 | 18 |
| 124550-77030 | 14 | 25 |
| 124722-59050 | 10 | 34 |
| | | 38 |
| | 12 | 51 |
| | | 54 |
| 124950-11340 | 4 | 29 |
| | 16 | 4 |
| 128300-77920 | 15 | 37 |
| 129001-01250 | 1 | 7 |
| 129001-11340 | 5 | 4 |
| 129001-32330 | 2 | 11 |
| 129001-91841 | 2 | 22 |
| 129004-13200 | 6 | 7 |
| | 16 | 28 |
| 129004-55610 | 13 | 1 |
| 129005-59830 | 9 | 12 |
| 129030-44760 | 10 | 41 |
| 129100-01580 | 3 | 1 |
| | | 16 |
| | 8 | 2 |
| 129100-01640 | 3 | 17 |
| 129100-35140 | 9 | 20 |
| 129100-55690 | 13 | 6 |
| 129100-77500 | 5 | 8 |
| 129100-77510 | 5 | 9 |
| | 16 | 27 |
| 129150-02450 | 7 | 4 |
| 129150-03070 | 4 | 42 |
| 129150-11230 | 4 | 11 |
| 129150-11280 | 4 | 9 |

# Parts No. Index

| Parts No. | Fig. No. | Ref. No. |
|---|---|---|
| 129150-11750 | 4 | 13 |
| 129150-14101 | 7 | 6 |
| 129150-14200 | 7 | 1 |
| 129150-25301 | 7 | 16 |
| 129150-35041 | 9 | 3 |
| | 16 | 12 |
| 129150-35111 | 9 | 21 |
| | 16 | 24 |
| 129150-35153 | 9 | 22 |
| 129150-42320 | 10 | 11 |
| 129150-49811 | 10 | 27 |
| 129150-59120 | 12 | 30 |
| 129150-59131 | 12 | 29 |
| | | 33 |
| 129150-77511 | 5 | 10 |
| | 16 | 8 |
| 129155-49801 | 10 | 26 |
| 129211-77920 | 15 | 38 |
| 129240-79300 | 15 | 14 |
| 129263-59550 | 12 | 48 |
| 129350-49530 | 10 | 20 |
| 129400-92420 | 16 | 30 |
| 129410-03990 | 5 | 2 |
| 129418-32320 | 2 | 10 |
| 129423-77200 | 15 | 2 |
| 129423-77710 | 15 | 17 |
| 129432-44740 | 10 | 30 |
| 129486-01670 | 3 | 20 |
| 129486-42050 | 10 | 40 |
| | 16 | 13 |
| 129486-59320 | 12 | 49 |
| 129486-59551 | 12 | 53 |
| 129555-01750 | 3 | 3 |
| 129556-42350 | 10 | 19 |
| 129608-77010 | 14 | 1 |
| 129608-77110 | 14 | 4 |
| 129698-77020 | 14 | 2 |
| 129698-77101 | 14 | 3 |
| 129698-77120 | 14 | 5 |
| 129698-77130 | 14 | 7 |
| 129698-77140 | 14 | 6 |
| 129698-77150 | 14 | 8 |
| 129698-77161 | 14 | 9 |
| 129698-77170 | 14 | 10 |
| 129698-77180 | 14 | 17 |
| 129698-77190 | 14 | 18 |
| 129698-77200 | 14 | 19 |
| 129698-77210 | 14 | 20 |
| 129698-77220 | 14 | 21 |
| 129698-77230 | 14 | 22 |

| Parts No. | Fig. No. | Ref. No. |
|---|---|---|
| 129698-77240 | 14 | 15 |
| 129698-77250 | 14 | 16 |
| 129698-77260 | 14 | 11 |
| 129698-77270 | 14 | 13 |
| 129698-77280 | 14 | 14 |
| 129792-22400 | 8 | 23 |
| 129795-01780 | 3 | 19 |
| 129795-01800 | 2 | 6 |
| 129795-01900 | 15 | 31 |
| 129795-01950 | 2 | 16 |
| 129795-02411 | 1 | 13 |
| 129795-21661 | 8 | 10 |
| 129795-49551 | 10 | 21 |
| | 16 | 14 |
| 129900-07900 | 4 | 1 |
| 129900-32130 | 2 | 9 |
| 158552-51151 | 7 | 18 |
| 171051-01921 | 1 | 5 |
| 171056-49120 | 9 | 23 |
| 171340-77520 | 5 | 11 |
| 22190-080002 | 3 | 11 |
| | 9 | 14 |
| | | 15 |
| | 16 | 17 |
| 22190-100002 | 9 | 16 |
| | 16 | 22 |
| 22190-160002 | 3 | 12 |
| | 16 | 10 |
| 22217-140000 | 7 | 19 |
| 22351-030010 | 8 | 8 |
| 22351-060012 | 4 | 35 |
| 22512-070140 | 7 | 7 |
| | 8 | 6 |
| 22857-500100 | 4 | 50 |
| | | 51 |
| 23414-080000 | 10 | 28 |
| | 16 | 16 |
| 23857-030000 | 9 | 13 |
| 23876-030000 | 2 | 4 |
| | 10 | 13 |
| 23876-040000 | 2 | 5 |
| 24311-000120 | 4 | 53 |
| | 16 | 19 |
| 24311-000160 | 13 | 8 |
| 24311-000320 | 2 | 23 |
| | 4 | 54 |
| | 16 | 20 |
| 24311-240100 | 9 | 5 |
| | 16 | 29 |
| 24321-000650 | 13 | 7 |

| Parts No. | Fig. No. | Ref. No. |
|---|---|---|
| 24341-000240 | 2 | 29 |
| | 16 | 21 |
| 25132-003800 | 10 | 18 |
| 26076-100222 | 3 | 15 |
| 26106-060142 | 10 | 14 |
| 26106-060162 | 2 | 30 |
| 26106-060202 | 10 | 15 |
| 26106-060502 | 10 | 39 |
| 26106-080122 | 10 | 29 |
| 26106-080142 | 4 | 2 |
| | 7 | 9 |
| 26106-080162 | 2 | 24 |
| | | 25 |
| | 3 | 13 |
| | 9 | 6 |
| | 11 | 3 |
| 26106-080202 | 9 | 7 |
| | 11 | 4 |
| 26106-080222 | 10 | 25 |
| 26106-080252 | 3 | 22 |
| | 4 | 36 |
| | 5 | 7 |
| 26106-080352 | 9 | 8 |
| | 10 | 16 |
| 26106-080402 | 5 | 12 |
| | 7 | 15 |
| 26106-080452 | 4 | 37 |
| | 15 | 36 |
| 26106-080502 | 4 | 38 |
| 26106-080552 | 2 | 26 |
| | 10 | 17 |
| 26106-080802 | 5 | 13 |
| 26106-080852 | 3 | 14 |
| 26116-120252 | 14 | 24 |
| 26306-080002 | 2 | 27 |
| | 6 | 5 |
| 26306-100002 | 15 | 32 |
| 26366-060002 | 9 | 17 |
| 26776-140002 | 7 | 8 |
| 27241-120000 | 1 | 8 |
| 27241-300000 | 1 | 9 |
| 27241-400000 | 4 | 23 |
| 27310-070001 | 4 | 30 |
| 719802-01500 | 2 | 1 |
| 719802-01560 | 1 | 1 |
| 719802-22900 | 8 | 34 |
| 719802-22950 | 8 | 36 |
| 719802-53101 | 12 | 1 |
| 719810-02980 | 1 | 24 |
| 719810-23100 | 8 | 24 |

| Parts No. | Fig. No. | Ref. No. |
|---|---|---|
| 719823-92800 | 16 | 1 |
| 719944-51301 | 11 | 1 |
| 977770-01212 | 2 | 31 |
| | 3 | 21 |
| | 4 | 56 |
| | 16 | 31 |
| X2114535200 | 14 | 12 |
| X9490561001 | 15 | 3 |