YANMAR

PARTS CATALOG

0CR10-M56200EN

Last update Aug., 2018

PREFACE

1. This Parts Catalog carries all parts incorporated in YANMAR Model 3TNV82A-DSA, 3TNV82A-DSA2, 3TNV82A-DSA3, 3TNV82A-GGE, 3TNV82A-GGET, 3TNV82A-GGECA engine manufactured since January, 2004.

2. Each illustration corresponds to the parts list on the following page.

3. When ordering parts, clearly write down the engine model and serial number, as well as the name and number of each part in your order sheet. This will help insure reliable delivery of the parts you have ordered.

Directions for the Parts Catalog.

1.This Parts Catalog shows both standard and optional parts.
2.Parts may change without prior notice.
3.The following is an example of the Parts Catalog format.

0CF10-G21601 29. FUEL INJECTION PUMP(W/BOOST)

(A)=4JH-DT
(B)=4JH-DTZ
(C)=4JH-DTZP
(D)=4JH-DTZA
(E)=4JH-DTZY
(F)=

① REF.	② LEV.	PARTS NO.	DESCRIPTION	Q'TY (A)	(B)	(C)	(D)	(E)	(F)	③ I	⑤ R
1	1	729595-51390	FUEL INJECTION PUMP	1	1	1	1	1			1
1-1	1	729595-51391	FUEL INJECTION PUMP	1	1	1	1	1		N	1
	(A=E00185)	(B=E00200)									
3	2	26022-060162	SCREW M 6X 16	9	9	9	9	9			
3-1 ④	2	26022-060162	SCREW M 6X 16	4	4	4	4	4		K	
	(A=E00156)	(B=E00156)	(C=E00156) (D=E00156)	(E=E00156)							
4	2	129470-51040	CAMSHAFT	1	1	1	1	1			
5	2	122710-51050	BEARING, ROLLER	2	2	2	2	2			
6	2	129470-51060	RETAINER	1	1	1	1	1			

Remarks
(1) BOOST COMPEMSATOR TYPE. OPTIONAL
PART, TO E00155,(4JH-DT, 4JH-DTZ

①Ref. No.

The Ref. No. listed may not be in accordance with the illustration Ref. No.

(Ex.) Illustration No. 1 — List Ref No. 1 (Before change) → 1- 1 (After change)

For interchangeable symbols N, R and K, illustrations for new parts may be abbreviated.

②Lev. (Level)

Level indication
The numbers below indicate the level of relativity towards the main part.
1 ----- Main parts (Assembly parts)
2 ----- Sub component included in " 1 ".
3 ----- Sub component included in " 2 ".
Note) Parts that are not for sale are partially illustrated but not listed.

③Interchangeability Symbol

When a part change takes place, one of the following interchangeability symbols is indicated beside the part.

Symbol	Interchangeability	Contents note
N	Old ← Yes / → No New	New Part is interchangeable for Old Part but Old Part is not interchangeable for New Part.
Q	Old ← No / → Yes New	New Part is not interchangeable for Old Part but Old Part is interchangeable for New Part.
R	Old ← Yes / → Yes New	New/ Old Parts are both interchangeable.
S	Old ← No / → No New	New/ Old Parts are both not interchangeable.
W		Part newly added.
Z		Part discontinued.
F		Not interchangeable by a single part but interchangeable together with related parts.
K		Changes only for used parts quantities.

④Effective Machine No.

When a part changes, the effective Machine No. will be indicated in the (A)-(F) column.

Product Symbol	Product No.	Product Symbol	Product No.
C	Clutch No. Compressor No.	F	Machine No. (Agricultural Equip.)
D	Drive No.	M	Machine No.
E	Engine No.		

Note 1) A date may follow the symbol. (Ex.) 1996.01
Note 2) " XXXXX " and " ZZZZZ " are for parts that could not be predicted or for engine models that could not be identified.
Note 3) (A=E00185) is the E (Engine Serial Number) for the column (A) model (in this case 4JH-DT) after the parts design change.

⑤Remarks

Figures or alphabets (symbols) are entered in the remarks column.
The comments (remarks) on parts that are indicated at the bottom of the illustration are the same symbols as those stated above.

Contents

0CR10-M56200

Fig. No.	Fig. Name
ENGINE	
1.	CYLINDER BLOCK
2.	GEAR HOUSING
3.	GEAR HOUSING
4.	FLYWHEEL HOUSING & OIL SUMP
5.	CYLINDER HEAD & BONNET
6.	SUCTION MANIFOLD
7.	EXHAUST MANIFOLD
8.	CAMSHAFT & DRIVING GEAR
9.	CRANKSHAFT & PISTON
10.	LUB. OIL SYSTEM
11.	COOLING WATER SYSTEM
12.	FUEL INJECTION PUMP
13.	FUEL INJECTION VALVE
14.	FUEL INJECTION VALVE
15.	FUEL PIPING
16.	STARTER MOTOR
17.	STARTER MOTOR
18.	GENERATOR
19.	GASKET SET

Fig.1. CYLINDER BLOCK

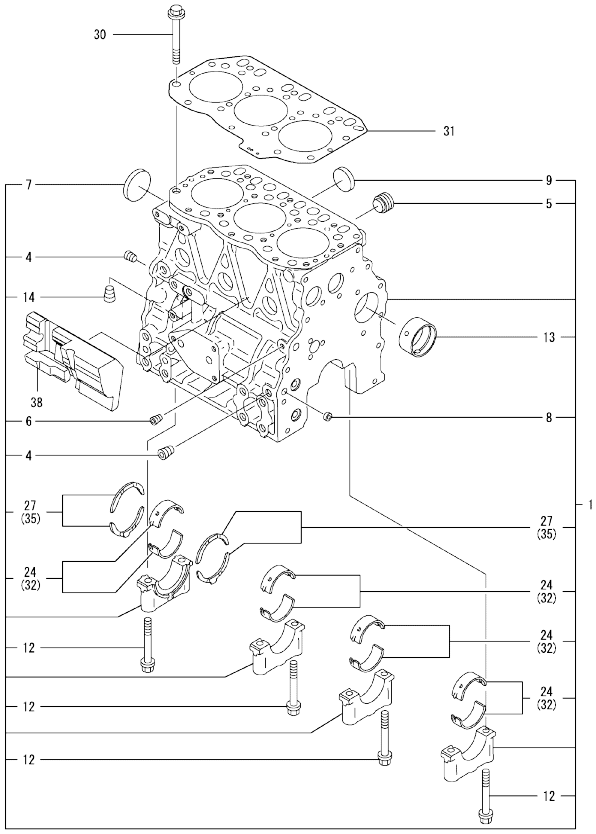

Remarks
(1)Under-sized(U.S.=0.25) parts.
(2)Over-sized(O.S.=0.25) parts.
(3)Repair parts.

(A)=3TNV82A-DSA
(B)=3TNV82A-DSA2
(C)=3TNV82A-DSA3
(D)=3TNV82A-GGE
(E)=3TNV82A-GGET
(F)=3TNV82A-GGECA

No.	Lev.	Parts No.	Description	Q'ty (A)	(B)	(C)	(D)	(E)	(F)	I	R
1	1	719802-01560	BLOCK ASSY, CYLINDER	1	1	1	1	1	1		
4	2	124160-01910	PLUG, PT1/4	2	2	2	2	2	2		
5	2	171051-01921	PLUG, NPTF1	1	1	1	1	1	1		
6	2	124060-01050	PLUG, PT1/8	1	1	1	1	1	1		
7	2	129001-01250	PLUG, 50	1	1	1	1	1	1		
8	2	27241-120000	PLUG, 12	2	2	2	2	2	2		
9	2	27241-300000	PLUG 30	6	6	6	6	6	6		
12	2	119620-02020	BOLT, METAL CAP	8	8	8	8	8	8		
13	2	129795-02411	BUSH, CAMSHAFT	1	1	1	1	1	1		
14	2	124160-01910	PLUG, PT1/4	1	1	1	1	1	1		
24	2	719810-02980	BEARING, MAIN	4	4	4	4	4	4		3
27	2	119810-02930	BEARING, THRUST	1	1	1	1	1	1		
30	1	119810-01200	BOLT, HEAD	14	14	14	14	14	14		
31	1	119812-01330	GASKET, HEAD	1	1	1	1	1	1		
32	1	119810-02870	BEARING, 0.25 US	4	4	4	4	4	4		1
35	1	119810-02940	BEARING, THRUST 0.25	2	2	2	2	2	2		2
38	1	119802-01190	SPACER	1	1	1	1	1	1		

N:Old ←Yes/No→ New. Q:Old ←No/Yes→ New. R:Old ←Yes/Yes→ New. S:Old ←No/No→ New. W:Add. Z:Discontinued. F:Interchangeable by set. K:Q'ty Change

Copyright (C) YANMAR CO., LTD. All RightsReserved.

Fig.2. GEAR HOUSING

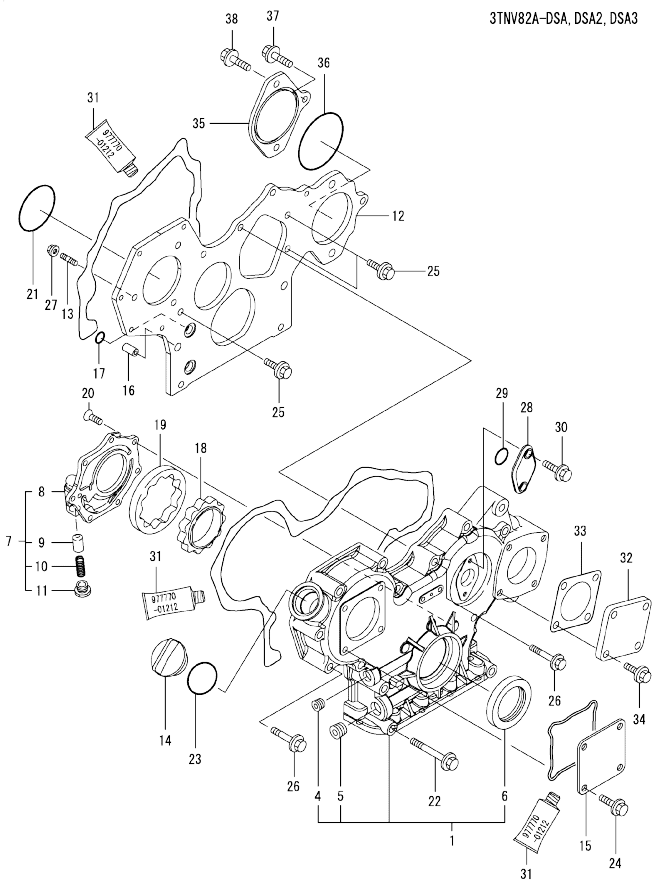

Remarks
(1)Optional parts.

(A)=3TNV82A-DSA
(B)=3TNV82A-DSA2
(C)=3TNV82A-DSA3
(D)=3TNV82A-GGE
(E)=3TNV82A-GGET
(F)=3TNV82A-GGECA

No.	Lev.	Parts No.	Description	Q'ty (A)	(B)	(C)	(D)	(E)	(F)	I	R
1	1	729005-01500	CASE ASSY, GEAR	1	1	1					
4	2	23876-030000	PLUG, R03	1	1	1					
5	2	23876-040000	PLUG, R04	1	1	1					
6	2	129795-01800	SEAL, OIL	1	1	1					
7	1	119802-32100	COVER ASSY	1	1	1					
8	2	119802-32070	COVER	1	1	1					
9	2	129900-32130	VALVE, RELIEF	1	1	1					
10	2	129418-32320	SPRING	1	1	1					
11	2	129001-32330	PLUG	1	1	1					
12	1	129005-01520	FLANGE, GEAR CASE	1	1	1					
13	1	119802-01560	STUD, M8X25	3	3	3					
14	1	124160-01751	COVER, FILLER	1	1	1					
15	1	124240-01871	COVER	1	1	1					
16	1	129795-01950	PIPE, KNOCK L=18	2	2	2					
17	1	119609-32040	O-RING, P16	4	4	4					
18	1	119802-32111	ROTOR, INNER	1	1	1					
19	1	119802-32120	ROTOR, OUTER	1	1	1					
20	1	119802-32130	SCREW, M6X16	7	7	7					
21	1	121850-51960	O-RING	1	1	1					
22	1	129001-91841	BOLT, M8X85	3	3	3					
23	1	24311-000320	O-RING, 1AP32.0	1	1	1					
24	1	26106-080162	BOLT, M8X 16 PLATED	4	4	4					
25	1	26106-080162	BOLT, M8X 16 PLATED	3	3	3					
26	1	26106-080552	BOLT, M8X 55 PLATED	11	11	11					
27	1	26306-080002	NUT, M8	3	3	3					
28	1	121023-01550	COVER	1	1	1					
29	1	24341-000240	O-RING, 1AS24.0	1	1	1					
30	1	26106-060162	BOLT, M6X 16 PLATED	2	2	2					
31	1	977770-01212	GASKET, LIQUID	1	1	1					1
32	1	124240-01871	COVER	1	1	1					
33	1	124240-01883	GASKET	1	1	1					
34	1	26106-080162	BOLT, M8X 16 PLATED	4	4	4					
35	1	129430-26070	COVER	1	1	1					
36	1	24321-000800	O-RING, 1AG80.0	1	1	1					
37	1	26106-080252	BOLT, M8X 25 PLATED	1	1	1					
38	1	26106-100302	BOLT, M10X 30 PLATED	2	2	2					

N:Old ←Yes/No→ New. Q:Old ←No/Yes→ New. R:Old ←Yes/Yes→ New. S:Old ←No/No→ New. W:Add. Z:Discontinued. F:Interchangeable by set. K:Q'ty Change

Copyright (C) YANMAR CO., LTD. All RightsReserved.

Fig.3. GEAR HOUSING

(A)=3TNV82A-DSA
(B)=3TNV82A-DSA2
(C)=3TNV82A-DSA3
(D)=3TNV82A-GGE
(E)=3TNV82A-GGET
(F)=3TNV82A-GGECA

3TNV82A-GGE

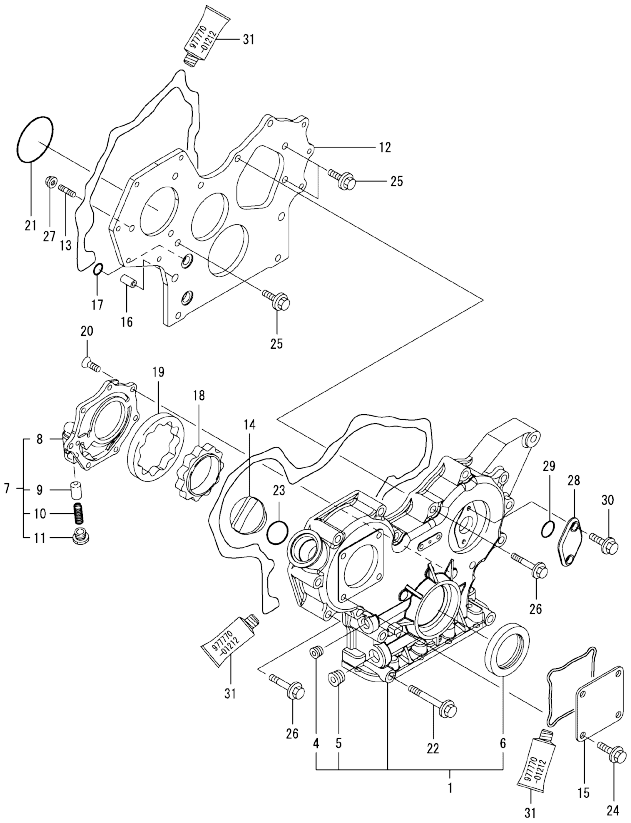

No.	Lev.	Parts No.	Description	Q'ty (A)	(B)	(C)	(D)	(E)	(F)	I	R
1	1	719802-01500	CASE ASSY, GEAR				1	1	1		
4	2	23876-030000	PLUG, R03				1	1	1		
5	2	23876-040000	PLUG, R04				1	1	1		
6	2	129795-01800	SEAL, OIL				1	1	1		
7	1	119802-32100	COVER ASSY				1	1	1		
8	2	119802-32070	COVER				1	1	1		
9	2	129900-32130	VALVE, RELIEF				1	1	1		
10	2	129418-32320	SPRING				1	1	1		
11	2	129001-32330	PLUG				1	1	1		
12	1	119802-01520	FLANGE, GEAR CASE				1	1	1		
13	1	119802-01560	STUD, M8X25				3	3	3		
14	1	124160-01751	COVER, FILLER				1	1	1		
15	1	124240-01871	COVER				1	1	1		
16	1	129795-01950	PIPE, KNOCK L=18				2	2	2		
17	1	119609-32040	O-RING, P16				4	4	4		
18	1	119802-32111	ROTOR, INNER				1	1	1		
19	1	119802-32120	ROTOR, OUTER				1	1	1		
20	1	119802-32130	SCREW, M6X16				7	7	7		
21	1	121850-51960	O-RING				1	1	1		
22	1	129001-91841	BOLT, M8X85				3	3	3		
23	1	24311-000320	O-RING, 1AP32.0				1	1	1		
24	1	26106-080162	BOLT, M8X 16 PLATED				4	4	4		
25	1	26106-080162	BOLT, M8X 16 PLATED				3	3	3		
26	1	26106-080552	BOLT, M8X 55 PLATED				12	12	12		
27	1	26306-080002	NUT, M8				3	3	3		
28	1	121023-01550	COVER				1	1	1		
29	1	24341-000240	O-RING, 1AS24.0				1	1	1		
30	1	26106-060162	BOLT, M6X 16 PLATED				2	2	2		
31	1	977770-01212	GASKET, LIQUID				1	1	1		1

Remarks
(1)Optional parts.

N:Old $\frac{\text{Yes}}{\text{No}}$ New. Q:Old $\frac{\text{No}}{\text{Yes}}$ New. R:Old $\frac{\text{Yes}}{\text{Yes}}$ New. S:Old $\frac{\text{No}}{\text{No}}$ New. W:Add. Z:Discontinued. F:Interchangeable by set. K:Q'ty Change

Copyright (C) YANMAR CO., LTD. All RightsReserved.

Fig.4. FLYWHEEL HOUSING & OIL SUMP

(A)=3TNV82A-DSA
(B)=3TNV82A-DSA2
(C)=3TNV82A-DSA3
(D)=3TNV82A-GGE
(E)=3TNV82A-GGET
(F)=3TNV82A-GGECA

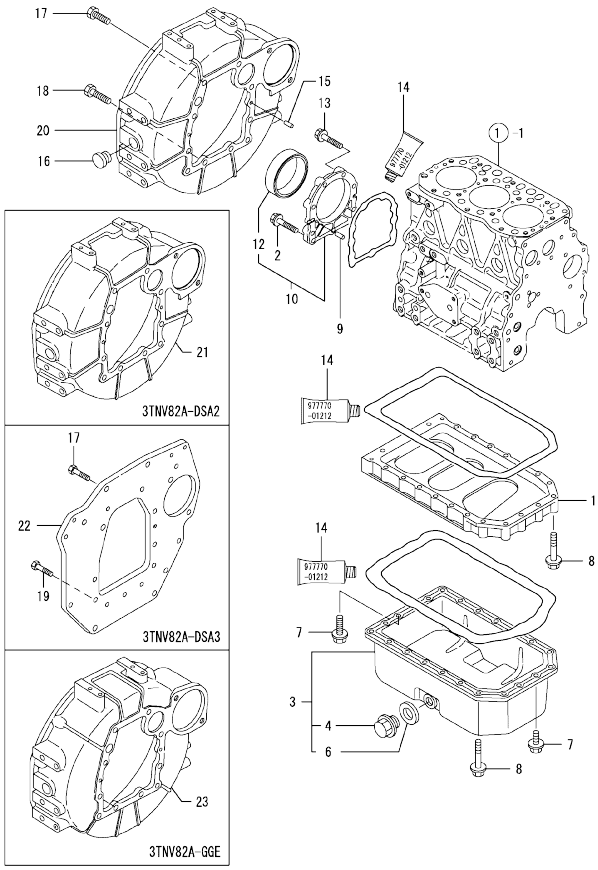

No.	Lev.	Parts No.	Description	Q'ty (A)	(B)	(C)	(D)	(E)	(F)	I	R
1	1	119810-01730	SPACER, OIL SUMP	1	1	1	1	1	1		
2	1	26106-080352	BOLT, M8X 35 PLATED	3	3	3	3	3	3		
3	1	119810-01770	SUMP ASSY, OIL	1	1	1	1	1	1		
4	2	119640-01640	PLUG, DRAIN M22	1	1	1	1	1	1		
6	2	22190-220002	WASHER, SEAL 22	1	1	1	1	1	1		
7	1	26106-080162	BOLT, M8X 16 PLATED	6	6	6	6	6	6		
8	1	26106-080452	BOLT, M8X 45 PLATED	22	22	22	22	22	22		
9	1	129100-01580	PIN, M8X16	2	2	2	2	2	2		
10	1	129100-01640	CASE ASSY, OIL SEAL	1	1	1	1	1	1		
12	2	129795-01780	SEAL, OIL	1	1	1	1	1	1		
13	1	129486-01670	BOLT, M8X30	6	6	6	6	6	6		
14	1	977770-01212	GASKET, LIQUID	1	1	1	1	1	1		1
15	1	129100-01580	PIN, M8X16	2	2	2	2	2	2		
16	1	119620-01750	CAP	1	1		1	1	1		
17	1	26206-100252	BOLT, M10X 25 PLATED	6	6	2	6	6	6		
18	1	26206-100302	BOLT, M10X 30 PLATED	4	4		4	4	4		
19	1	26206-100202	BOLT, M10X 20 PLATED			6					
20	1	119888-01600	HOUSING, FLYWHEEL	1							
21	1	129612-01600	HOUSING, FLYWHEEL		1						
22	1	129129-01600	FLANGE, MOUNTING			1					
23	1	171420-01600	HOUSING, FLYWHEEL				1	1	1		

Remarks
(1)Optional parts.

N:Old ←Yes/No→ New. Q:Old ←No/Yes→ New, R:Old ←Yes/Yes→ New. S:Old ←No/No→ New. W:Add. Z:Discontinued. F:Interchangeable by set. K:Q'ty Change

Copyright (C) YANMAR CO., LTD. All RightsReserved.

Fig.5. CYLINDER HEAD & BONNET

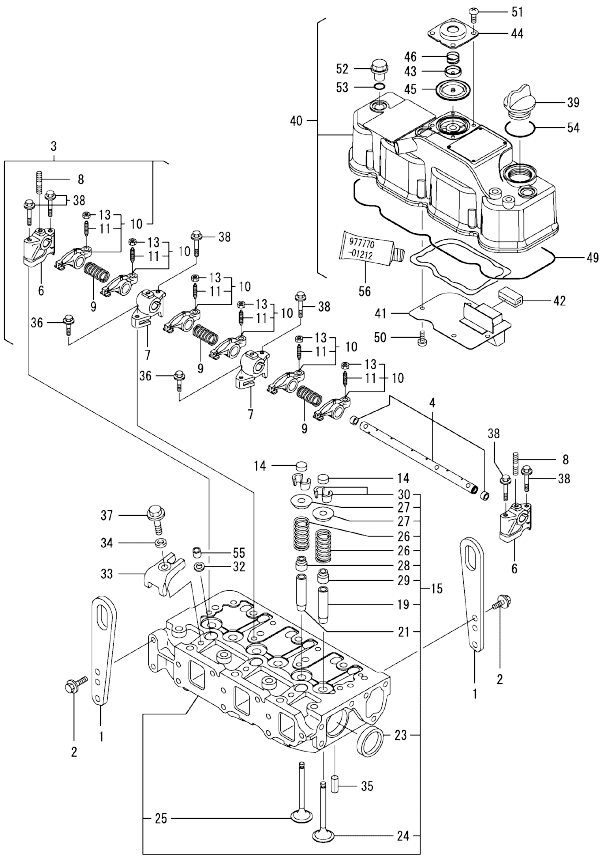

				Q'ty (A)	(B)	(C)	(D)	(E)	(F)	I	R
No.	Lev.	Parts No.	Description								
1	1	129900-07900	LIFTER	2	2	2	2	2	2		
2	1	26106-080142	BOLT, M8X 14 PLATED	4	4	4	4	4	4		
3	1	119802-11241	SHAFT ASSY, ROCKER	1	1	1	1	1	1		
4	2	119802-11251	SHAFT, ROCKER ARM	1	1	1	1	1	1		
6	2	119802-11260	SUPPORT, ROCKER ARM	2	2	2	2	2	2		
7	2	119802-11270	SUPPORT, ROCKER ARM	2	2	2	2	2	2		
8	2	119802-11280	STUD	3	3	3	3	3	3		
9	2	129150-11280	SPRING	3	3	3	3	3	3		
10	2	119802-11650	ARM, ROCKER	6	6	6	6	6	6		
11	3	129150-11230	SCREW, VALVE ADJUST	6	6	6	6	6	6		
13	3	129150-11750	NUT, M8	6	6	6	6	6	6		
14	1	104211-11370	CAP, VALVE	6	6	6	6	6	6		
15	1	119802-11700	HEAD ASSY, CYLINDER	1	1	1	1	1	1		
19	2	124060-11800	GUIDE, VALVE	3	3	3	3	3	3		1
21	2	119802-11810	GUIDE, VALVE	3	3	3	3	3	3		1
23	2	27241-400000	PLUG, 40	2	2	2	2	2	2		
24	2	119802-11100	VALVE, INTAKE	3	3	3	3	3	3		
25	2	119802-11110	VALVE, EXHAUST	3	3	3	3	3	3		
26	2	119810-11120	SPRING, VALVE	6	6	6	6	6	6		
27	2	104211-11180	RETAINER, SPRING	6	6	6	6	6	6		
28	2	124160-11340	SEAL, VALVE STEM	3	3	3	3	3	3		
29	2	124950-11340	SEAL, VALVE STEM	3	3	3	3	3	3		
30	2	27310-070001	COTTER, 7	6	6	6	6	6	6		
32	1	119625-11880	SEAT, NOZZLE	3	3	3	3	3	3		
33	1	119802-11900	RETAINER, NOZZLE	3	3	3	3	3	3		
34	1	120270-54410	WASHER, INJECTOR	3	3	3	3	3	3		
35	1	22351-060012	PIN, SPRING 6.0X12	2	2	2	2	2	2		
36	1	26106-080252	BOLT, M8X 25 PLATED	2	2	2	2	2	2		
37	1	26106-080452	BOLT, M8X 45 PLATED	3	3	3	3	3	3		
38	1	26106-080502	BOLT, M8X 50 PLATED	6	6	6	6	6	6		
39	1	124160-01751	COVER, FILLER	1	1	1	1	1	1		
40	1	119802-11350	BONNET ASSY, HEAD	1	1	1	1	1	1		
41	2	119802-03010	PLATE	1	1	1	1	1	1		
42	2	129150-03070	BAFFLE, BREATHER	1	1	1	1	1	1		
43	2	119802-03110	PLATE	1	1	1	1	1	1		
44	2	119802-03121	COVER, DIAPHRAGM	1	1	1	1	1	1		
45	2	119802-03130	DIAPHRAGM	1	1	1	1	1	1		
46	2	119802-03141	SPRING, DIAPHRAGM	1	1	1	1	1	1		
49	2	119802-11310	GASKET, BONNET	1	1	1	1	1	1		
50	2	22857-500100	SCREW, 5X10	4	4	4	4	4	4		
51	2	22857-500100	SCREW, 5X10	4	4	4	4	4	4		
52	1	124160-11360	KNOB	3	3	3	3	3	3		
53	1	24311-000120	O-RING, 1AP12.0	3	3	3	3	3	3		
54	1	24311-000320	O-RING, 1AP32.0	1	1	1	1	1	1		
55	1	119802-11870	PROTECTOR, NOZZLE	3	3	3	3	3	3		
56	1	977770-01212	GASKET, LIQUID	1	1	1	1	1	1		2

(A)=3TNV82A-DSA
(B)=3TNV82A-DSA2
(C)=3TNV82A-DSA3
(D)=3TNV82A-GGE
(E)=3TNV82A-GGET
(F)=3TNV82A-GGECA

Remarks
(1)Repair parts.
(2)Optional parts.

N:Old ←Yes/No→ New. Q:Old ←No/Yes→ New. R:Old ←Yes/Yes→ New. S:Old ←No/No→ New. W:Add. Z:Discontinued. F:Interchangeable by set. K:Q'ty Change

Copyright (C) YANMAR CO., LTD. All RightsReserved.

Fig.6. SUCTION MANIFOLD

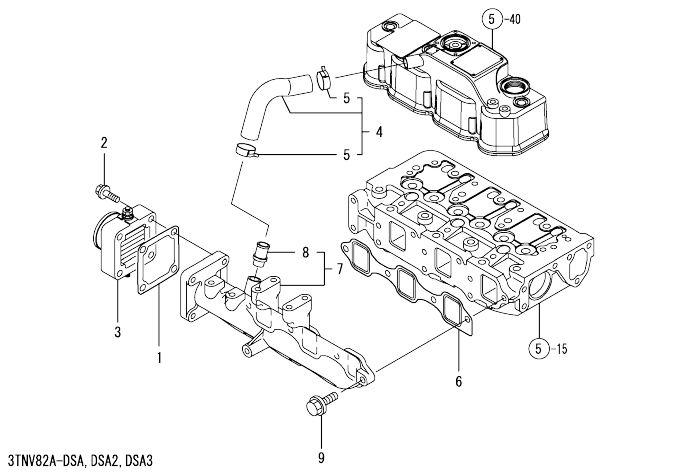

3TNV82A-DSA, DSA2, DSA3

3TNV82A-GGE

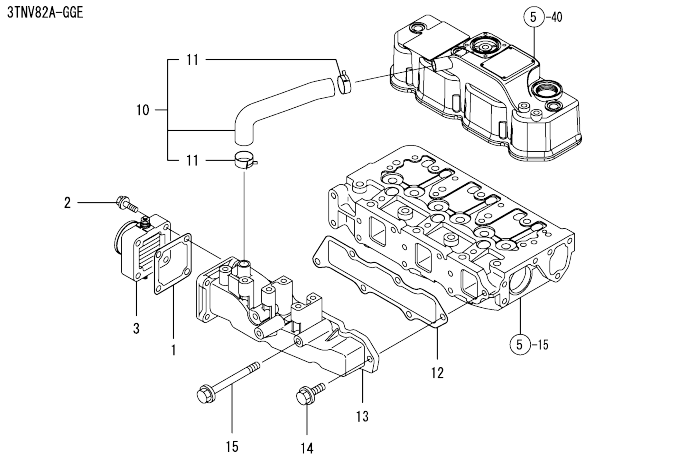

(A)=3TNV82A-DSA
(B)=3TNV82A-DSA2
(C)=3TNV82A-DSA3
(D)=3TNV82A-GGE
(E)=3TNV82A-GGET
(F)=3TNV82A-GGECA

No.	Lev.	Parts No.	Description	Q'ty (A)	(B)	(C)	(D)	(E)	(F)	I	R
1	1	129150-77511	GASKET	1	1	1	1	1	1		
2	1	26106-080352	BOLT, M8X 35 PLATED	4	4	4	4	4	4		
3	1	129120-77501	HEATER	1	1	1	1	1	1		
4	1	119802-03090	PIPE , BREATHER	1	1	1					
5	2	129410-03990	CLIP	2	2	2					
6	1	119810-12112	GASKET, MANIFOLD	1	1	1					
7	1	119802-12130	MANIFOLD, AIR INTAKE	1	1	1					
8	2	129001-11340	PIPE , BREATHER	1	1	1					
9	1	26106-080252	BOLT, M8X 25 PLATED	4	4	4					
10	1	119802-03080	PIPE , BREATHER				1	1	1		
11	2	129410-03990	CLIP				2	2	2		
12	1	119813-12110	GASKET, MANIFOLD				1	1	1		
13	1	119802-12100	MANIFOLD, AIR INTAKE				1	1	1		
14	1	26106-080202	BOLT, M8X 20 PLATED				4	4	4		
15	1	26106-080802	BOLT, M8X 80 PLATED				2	2	2		

N:Old ←Yes/No→ New. Q:Old ←No/Yes→ New. R:Old ←Yes/Yes→ New. S:Old ←No/No→ New. W:Add. Z:Discontinued. F:Interchangeable by set. K:Q'ty Change

Copyright (C) YANMAR CO., LTD. All RightsReserved.

Fig.7. EXHAUST MANIFOLD

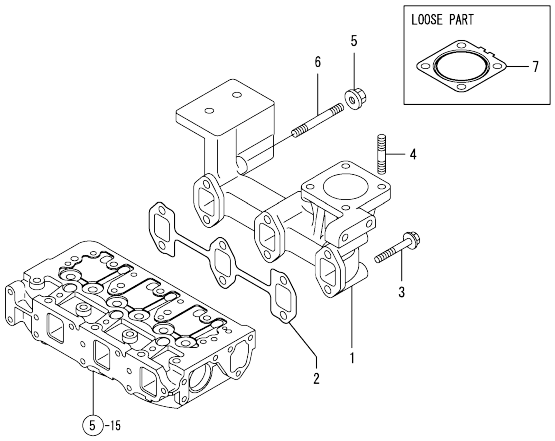

(A)=3TNV82A-DSA
(B)=3TNV82A-DSA2
(C)=3TNV82A-DSA3
(D)=3TNV82A-GGE
(E)=3TNV82A-GGET
(F)=3TNV82A-GGECA

No.	Lev.	Parts No.	Description	Q'ty (A)	(B)	(C)	(D)	(E)	(F)	I	R
1	1	119802-13109	MANIFOLD, EXHAUST	1	1	1	1	1	1		
2	1	119810-13110	GASKET	1	1	1	1	1	1		
3	1	119802-13640	BOLT, M8X60 10.9T	4	4	4	4	4	4		
4	1	119131-18320	STUD, M8X22	4	4	4	4	4	4		
5	1	26306-080002	NUT, M8	2	2	2	2	2	2		
6	1	119802-13740	STUD, M8X60	2	2	2	2	2	2		
7	1	129004-13200	GASKET, SILENCER	1	1	1	1	1	1		

N:Old ←Yes/No→ New. Q:Old ←No/Yes→ New. R:Old ←Yes/Yes→ New. S:Old ←No/No→ New. W:Add. Z:Discontinued. F:Interchangeable by set. K:Q'ty Change

Copyright (C) YANMAR CO., LTD. All RightsReserved.

Fig.8. CAMSHAFT & DRIVING GEAR

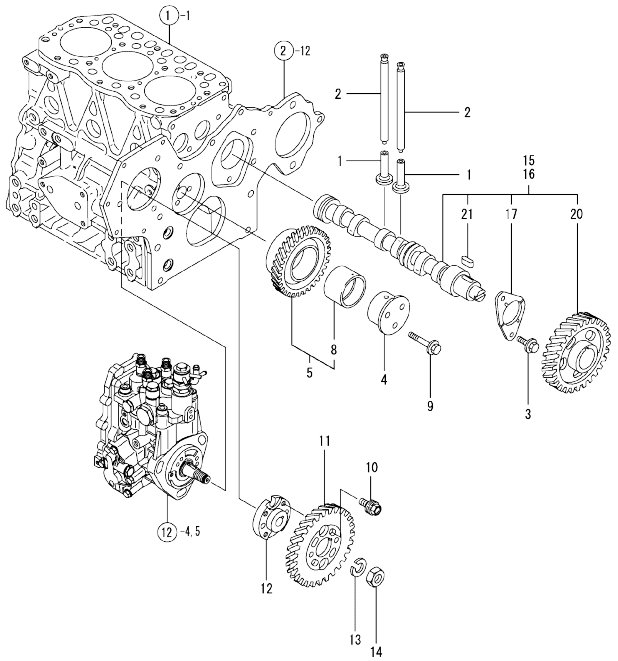

(A)=3TNV82A-DSA
(B)=3TNV82A-DSA2
(C)=3TNV82A-DSA3
(D)=3TNV82A-GGE
(E)=3TNV82A-GGET
(F)=3TNV82A-GGECA

No.	Lev.	Parts No.	Description	Q'ty (A)	(B)	(C)	(D)	(E)	(F)	I	R
1	1	129150-14200	TAPPET	6	6	6	6	6	6		
2	1	119810-14400	ROD, PUSH	6	6	6	6	6	6		
3	1	26106-080142	BOLT, M8X 14 PLATED	2	2	2	2	2	2		
4	1	119802-25051	SHAFT, IDLE	1	1	1	1	1	1		
5	1	119802-25100	GEAR ASSY, IDLE	1	1	1	1	1	1		
8	2	119802-25070	BUSH, IDLE GEAR	1	1	1	1	1	1		1
9	1	26106-080402	BOLT, M8X 40 PLATED	3	3	3	3	3	3		
10	1	129150-25301	BOLT	4	4	4	4	4	4		
11	1	119802-25901	GEAR, PUMP	1	1	1	1	1	1		
12	1	158552-51151	FLANGE	1	1	1	1	1	1		
13	1	22217-140000	WASHER, SPRING 14	1	1	1	1	1	1		
14	1	26776-140002	NUT, LOCK M14	1	1	1	1	1	1		
15	1	119802-14580	CAMSHAFT ASSY	1	1	1					
16	1	119802-14590	CAMSHAFT ASSY				1	1	1		
17	2	129150-02450	BEARING, THRUST	1	1	1	1	1	1		
20	2	129150-14101	GEAR, CAMSHAFT	1	1	1	1	1	1		
21	2	22512-070140	KEY, 7X 14	1	1	1	1	1	1		

Remarks
(1)Repair parts.

N:Old ←Yes/No→ New. Q:Old ←No/Yes→ New, R:Old ←Yes/Yes→ New, S:Old ←No/No→ New, W:Add, Z:Discontinued, F:Interchangeable by set, K:Q'ty Change

Copyright (C) YANMAR CO., LTD. All RightsReserved.

Fig.9. CRANKSHAFT & PISTON

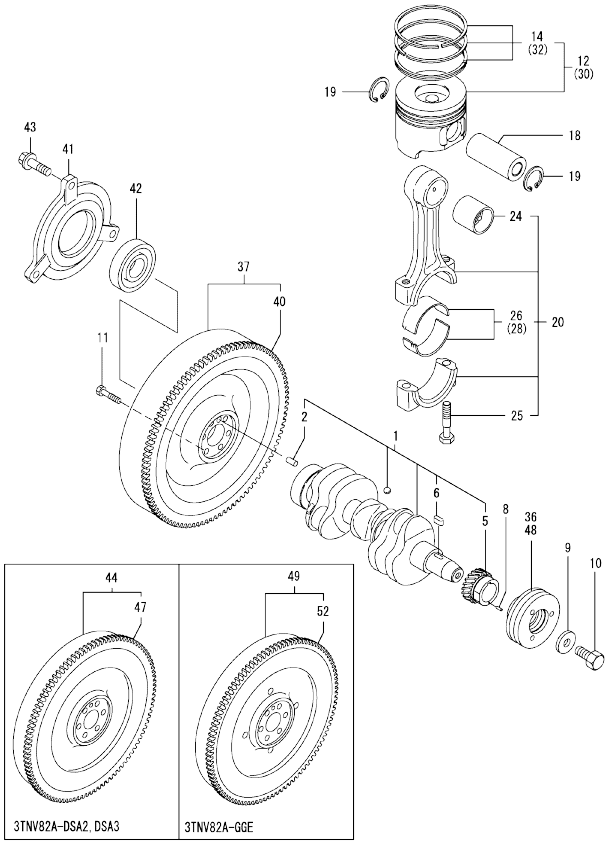

(A)=3TNV82A-DSA
(B)=3TNV82A-DSA2
(C)=3TNV82A-DSA3
(D)=3TNV82A-GGE
(E)=3TNV82A-GGET
(F)=3TNV82A-GGECA

No.	Lev.	Parts No.	Description	Q'ty (A)	(B)	(C)	(D)	(E)	(F)	I	R
1	1	119802-21002	CRANKSHAFT ASSY	1	1	1	1	1	1		
2	2	129100-01580	PIN, M8X16	1	1	1	1	1	1		
5	2	119802-21202	GEAR, CRANKSHAFT	1	1	1	1	1	1		
6	2	22512-070140	KEY, 7X 14	1	1	1	1	1	1		
8	1	22351-030010	PIN, SPRING 3.0X10	1	1	1	1	1	1		
9	1	129795-21661	WASHER	1	1	1	1	1	1		
10	1	121850-21680	BOLT	1	1	1	1	1	1		
11	1	121111-21501	BOLT, FLYWHEEL	6	6	6	6	6	6		
12	1	119802-22080	PISTON ASSY	3	3	3	3	3	3		
14	2	119802-22500	RING SET, PISTON	3	3	3	3	3	3		
18	1	119813-22300	PIN, PISTON	3	3	3	3	3	3		
19	1	129792-22400	CIRCLIP, 23	6	6	6	6	6	6		
20	1	719810-23100	ROD ASSY, CONNECTING	3	3	3	3	3	3		
24	2	119810-23910	BEARING, PISTON PIN	3	3	3	3	3	3		1
25	2	119810-23200	BOLT, CONNECTING ROD	6	6	6	6	6	6		
26	2	119810-23600	BEARING, CRANK PIN	3	3	3	3	3	3		
28	1	119810-23610	BEARING, 0.25 US	3	3	3	3	3	3		2
30	1	719802-22900	PISTON ASSY, 0.25 OS	3	3	3	3	3	3		3
32	2	719802-22950	RING SET, 0.25 OS	3	3	3	3	3	3		3
36	1	119802-21650	V-PULLEY, 110	1	1	1					
37	1	129488-21590	FLYWHEEL ASSY	1							
40	2	119865-21600	GEAR, RING	1							
41	1	119888-21450	RETAINER, BEARING	1							
42	1	24104-062054	BEARING, BALL 6205UU	1							
43	1	26106-080222	BOLT, M8X 22 PLATED	3							
44	1	171420-21580	FLYWHEEL ASSY		1	1					
47	2	119865-21600	GEAR, RING		1	1					
48	1	119802-21660	V-PULLEY, 120				1	1	1		
49	1	171420-21590	FLYWHEEL ASSY				1	1	1		
52	2	124550-21600	GEAR, RING				1	1	1		

Remarks
(1)Repair parts.
(2)Under-sized(U.S.=0.25) parts.
(3)Over-sized(O.S.=0.25) parts.

N:Old $\frac{\text{Yes}}{\text{No}}$ New. Q:Old $\frac{\text{No}}{\text{Yes}}$ New. R:Old $\frac{\text{Yes}}{\text{Yes}}$ New. S:Old $\frac{\text{No}}{\text{No}}$ New. W:Add. Z:Discontinued. F:Interchangeable by set. K:Q'ty Change

Copyright (C) YANMAR CO., LTD. All RightsReserved.

Fig.10. LUB. OIL SYSTEM

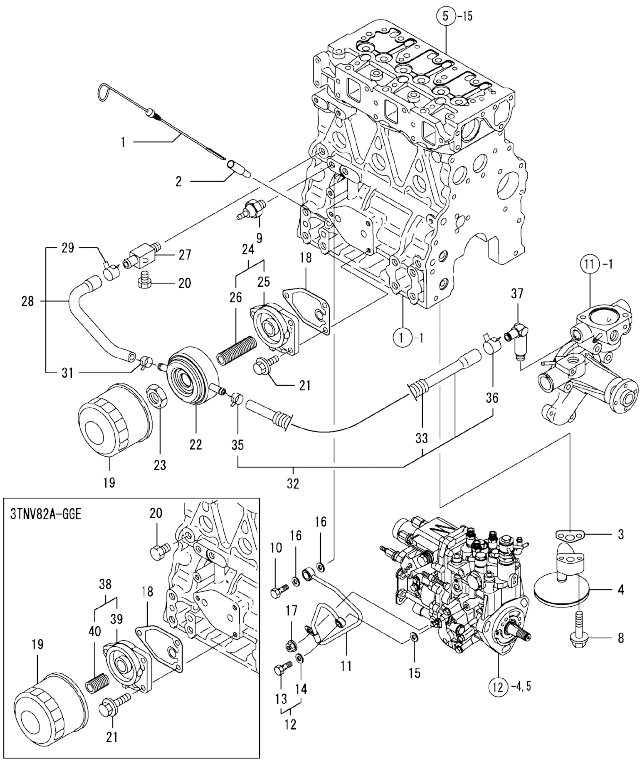

(A)=3TNV82A-DSA
(B)=3TNV82A-DSA2
(C)=3TNV82A-DSA3
(D)=3TNV82A-GGE
(E)=3TNV82A-GGET
(F)=3TNV82A-GGECA

No.	Lev.	Parts No.	Description	Q'ty (A)	(B)	(C)	(D)	(E)	(F)	I	R
1	1	119802-34801	DIPSTICK, OIL	1	1	1	1	1	1		
2	1	121520-34810	GUIDE, DIPSTICK	1	1	1	1	1	1		
3	1	129150-35041	GASKET	1	1	1	1	1	1		
4	1	119810-35300	PIPE ASSY, OIL INLET	1	1	1	1	1	1		
8	1	26106-080352	BOLT, M8X 35 PLATED	2	2	2	2	2	2		
9	1	114250-39450	SWITCH, 0.5KG	1	1	1	1	1	1		
10	1	124160-39140	BOLT, PIPE JOINT M10	1	1	1	1	1	1		
11	1	119802-39450	PIPE ASSY, OIL	1	1	1	1	1	1		
12	1	129005-59830	BOLT ASSY, JOINT M8	1	1	1	1	1	1		
13	2	23857-030000	BOLT, JOINT 3	1	1	1	1	1	1		
14	2	22190-080002	WASHER, SEAL 6	1	1	1	1	1	1		
15	1	22190-080002	WASHER, SEAL 6	1	1	1	1	1	1		
16	1	22190-100002	WASHER, SEAL 10	2	2	2	2	2	2		
17	1	26366-060002	NUT, M6	1	1	1	1	1	1		
18	1	129150-35111	GASKET	1	1	1	1	1	1		
19	1	129150-35170	FILTER,LO	1	1	1	1	1	1		1
20	1	171056-49120	PLUG, DRAIN	1	1	1	1	1	1		
21	1	26106-080202	BOLT, M8X 20 PLATED	3	3	3	3	3	3		
22	1	129508-33010	COOLER ASSY, OIL	1	1	1					
23	1	129417-33110	NUT	1	1	1					
24	1	129006-35100	BRACKET ASSY, FILTER	1	1	1					
25	2	119802-35110	BRACKET, FILTER	1	1	1					
26	2	129417-35150	STUD, L=67	1	1	1					
27	1	129006-44480	JOINT	1	1	1					
28	1	129508-49030	PIPE ASSY, WATER	1	1	1					
29	2	171008-03990	CLIP, HOSE 18.5	1	1	1					
31	2	23080-015000	CLAMP, 15	1	1	1					
32	1	129508-49040	PIPE ASSY, WATER	1	1	1					
33	2	119940-59130	TUBE, CORRUGATED	1	1	1					
35	2	23080-015000	CLAMP, 15	1	1	1					
36	2	23080-018000	CLAMP, 18	1	1	1					
37	1	119944-49300	ELBOW, PT3/8	1	1	1					
38	1	119802-35100	BRACKET ASSY, FILTER				1	1	1		
39	2	119802-35110	BRACKET, FILTER				1	1	1		
40	2	129100-35140	STUD				1	1	1		

Remarks
(1)Repair parts.

N:Old ←Yes/No→ New. Q:Old ←No/Yes→ New. R:Old ←Yes/Yes→ New. S:Old ←No/No→ New. W:Add. Z:Discontinued. F:Interchangeable by set. K:Q'ty Change

Copyright (C) YANMAR CO., LTD. All RightsReserved.

Fig.11. COOLING WATER SYSTEM

(A)=3TNV82A-DSA
(B)=3TNV82A-DSA2
(C)=3TNV82A-DSA3
(D)=3TNV82A-GGE
(E)=3TNV82A-GGET
(F)=3TNV82A-GGECA

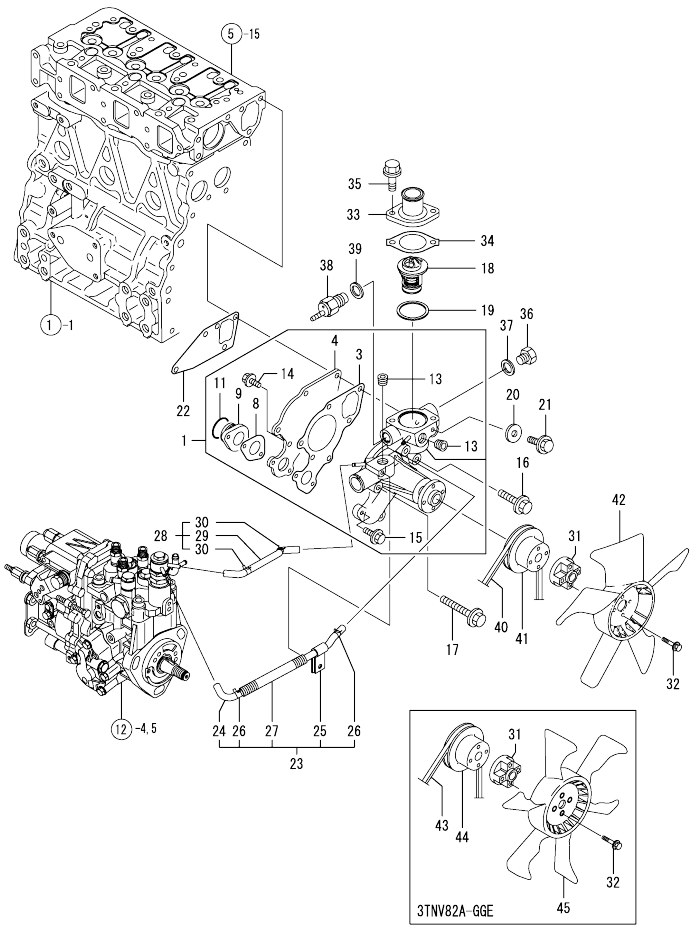

No.	Lev.	Parts No.	Description	Q'ty (A)	(B)	(C)	(D)	(E)	(F)	I	R
1	1	119802-42000	PUMP ASSY, WATER	1	1	1	1	1	1		
3	2	119810-42051	GASKET, WATER PUMP	1	1	1	1	1	1		
4	2	119810-42120	PLATE	1	1	1	1	1	1		
8	2	119810-42281	GASKET, WATER PUMP	1	1	1	1	1	1		
9	2	119810-42290	PIPE	1	1	1	1	1	1		
11	2	129054-42320	O-RING	1	1	1	1	1	1		
13	2	23876-030000	PLUG, R03	2	2	2	2	2	2		
14	2	26106-060142	BOLT, M6X 14 PLATED	2	2	2	2	2	2		
15	2	26106-060202	BOLT, M6X 20 PLATED	2	2	2	2	2	2		
16	1	26106-080352	BOLT, M8X 35 PLATED	1	1	1	1	1	1		
17	1	26106-080552	BOLT, M8X 55 PLATED	3	3	3	3	3	3		
18	1	129155-49801	THERMOSTAT, 71	1	1	1	1	1	1		
19	1	129150-49811	GASKET, THERMOSTAT	1	1	1	1	1	1		
20	1	23414-080000	GASKET, 8X1.0	1	1	1	1	1	1		
21	1	26106-080122	BOLT, M8X 12 PLATED	1	1	1	1	1	1		
22	1	129486-42050	GASKET, WATER PUMP	1	1	1	1	1	1		
23	1	119802-49610	PIPE ASSY, WATER	1	1	1	1	1	1		
24	2	119802-49711	PIPE ASSY, WATER	1	1	1	1	1	1		
25	2	119802-49730	RETAINER, PIPE	1	1	1	1	1	1		
26	2	124722-59050	CLIP, HOSE 9	2	2	2	2	2	2		
27	2	119802-59320	TUBE, CORRUGATED	1	1	1	1	1	1		
28	1	119802-49620	PIPE ASSY, WATER	1	1	1	1	1	1		
29	2	119802-49721	PIPE ASSY, WATER	1	1	1	1	1	1		
30	2	124722-59050	CLIP, HOSE 9	2	2	2	2	2	2		
31	1	121267-44760	SPACER	1	1	1	1	1	1		
32	1	26106-060302	BOLT, M6X 30 PLATED	4	4	4	4	4	4		
33	1	129350-49530	COVER, THERMOSTAT	1	1	1	1	1	1		
34	1	129795-49551	GASKET	1	1	1	1	1	1		
35	1	26106-080222	BOLT, M8X 22 PLATED	2	2	2	2	2	2		
36	1	121450-42450	PLUG, M16	1	1	1	1	1	1		
37	1	124465-44950	GASKET, 16	1	1	1	1	1	1		
38	1	121250-44901	SWITCH, 110	1	1	1	1	1	1		
39	1	124465-44950	GASKET, 16	1	1	1	1	1	1		
40	1	25132-003700	V-BELT, A37	1	1	1					
41	1	129403-42380	V-PULLEY, D=110	1	1	1					
42	1	129335-44740	FAN, COOLING D335	1	1	1					
43	1	25132-003800	V-BELT, A38				1	1	1		
44	1	129155-42350	V-PULLEY				1	1	1		
45	1	171340-44740	FAN, COOLING D335XNF				1	1	1		

N:Old ←Yes/No→ New. Q:Old ←No/Yes→ New. R:Old ←Yes/Yes→ New. S:Old ←No/No→ New. W:Add. Z:Discontinued. F:Interchangeable by set. K:Q'ty Change

Copyright (C) YANMAR CO., LTD. All RightsReserved.

Fig.12. FUEL INJECTION PUMP

(A)=3TNV82A-DSA
(B)=3TNV82A-DSA2
(C)=3TNV82A-DSA3
(D)=3TNV82A-GGE
(E)=3TNV82A-GGET
(F)=3TNV82A-GGECA

No.	Lev.	Parts No.	Description	Q'ty (A)	(B)	(C)	(D)	(E)	(F)	I	R
1	1	119802-51250	RETAINER, PUMP	1	1	1	1	1	1		
2	1	26106-080162	BOLT, M8X 16 PLATED	1	1	1	1	1	1		
3	1	26106-080202	BOLT, M8X 20 PLATED	1	1	1	1	1	1		
4	1	719802-51310	PUMP ASSY, INJECTION	1	1	1					
5	1	719946-51390	PUMP ASSY, INJECTION				1	1	1		

N:Old $\xleftarrow[\text{No}]{\text{Yes}}$ New. Q:Old $\xleftarrow[\text{Yes}]{\text{No}}$ New. R:Old $\xleftarrow[\text{Yes}]{\text{Yes}}$ New. S:Old $\xleftarrow[\text{No}]{\text{No}}$ New. W:Add. Z:Discontinued. F:Interchangeable by set. K:Q'ty Change

Copyright (C) YANMAR CO., LTD. All RightsReserved.

Fig.13. FUEL INJECTION VALVE

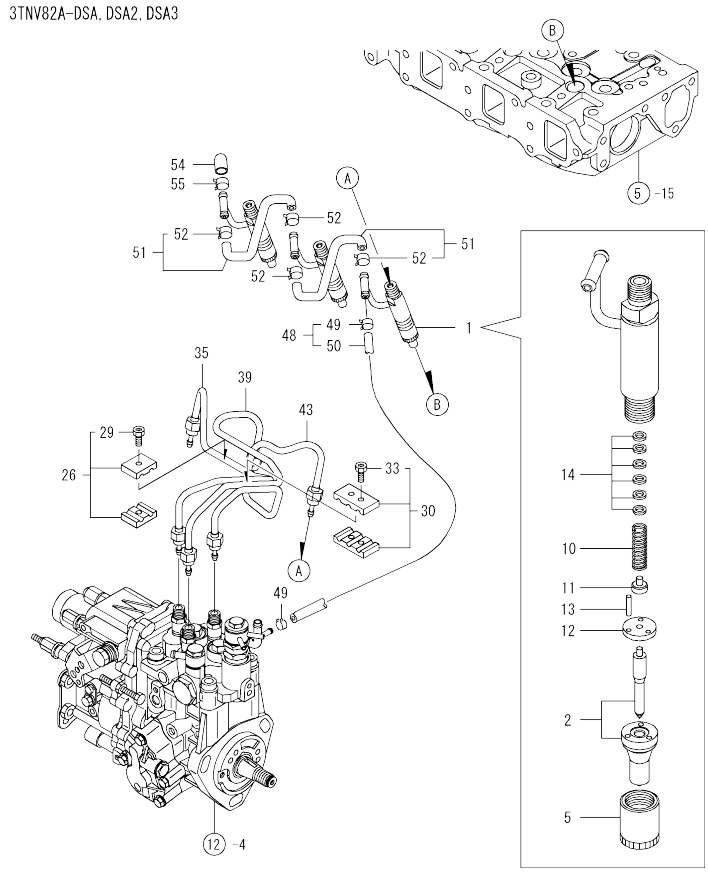

(A)=3TNV82A-DSA
(B)=3TNV82A-DSA2
(C)=3TNV82A-DSA3
(D)=3TNV82A-GGE
(E)=3TNV82A-GGET
(F)=3TNV82A-GGECA

No.	Lev.	Parts No.	Description	Q'ty (A)	(B)	(C)	(D)	(E)	(F)	I	R
1	1	719802-53101	VALVE ASSY,INJECTION	3	3	3					
2	2	119802-53001	VALVE ASSY,INJECTION	3	3	3					
5	2	114250-53080	NUT, NOZZLE D16.95	3	3	3					
10	2	114250-53120	SPRING, NOZZLE	3	3	3					
11	2	114250-53130	SEAT, SPRING	3	3	3					
12	2	114250-53140	PLATE	3	3	3					
13	2	114250-53210	PIN	6	6	6					
14	2	114250-53400	SHIM SET	3	3	3					
26	1	119305-59120	RETAINER, PIPE	1	1	1					
29	2	129150-59131	BOLT, M4X14	1	1	1					
30	1	129150-59120	RETAINER, PIPE	1	1	1					
33	2	129150-59131	BOLT, M4X14	2	2	2					
35	1	119802-59960	PIPE ASSY, INJECTION	1	1	1					
39	1	119802-59970	PIPE ASSY, INJECTION	1	1	1					
43	1	119802-59980	PIPE ASSY, INJECTION	1	1	1					
48	1	119802-59550	PIPE ASSY, RETURN	1	1	1					
49	2	124722-59050	CLIP, HOSE 9	2	2	2					
50	2	119802-59560	PIPE, FUEL RETURN	1	1	1					
51	1	129486-59551	PIPE ASSY, RETURN	2	2	2					
52	2	124722-59050	CLIP, HOSE 9	4	4	4					
54	1	119593-59580	CAP	1	1	1					
55	1	124060-77680	CLIP, HOSE 10	1	1	1					

N:Old ◄Yes/No► New. Q:Old ◄No/Yes► New. R:Old ◄Yes/Yes► New. S:Old ◄No/No► New. W:Add. Z:Discontinued. F:Interchangeable by set. K:Q'ty Change

Copyright (C) YANMAR CO., LTD. All RightsReserved.

Fig.14. FUEL INJECTION VALVE

(A)=3TNV82A-DSA
(B)=3TNV82A-DSA2
(C)=3TNV82A-DSA3
(D)=3TNV82A-GGE
(E)=3TNV82A-GGET
(F)=3TNV82A-GGECA

3TNV82A-GGE

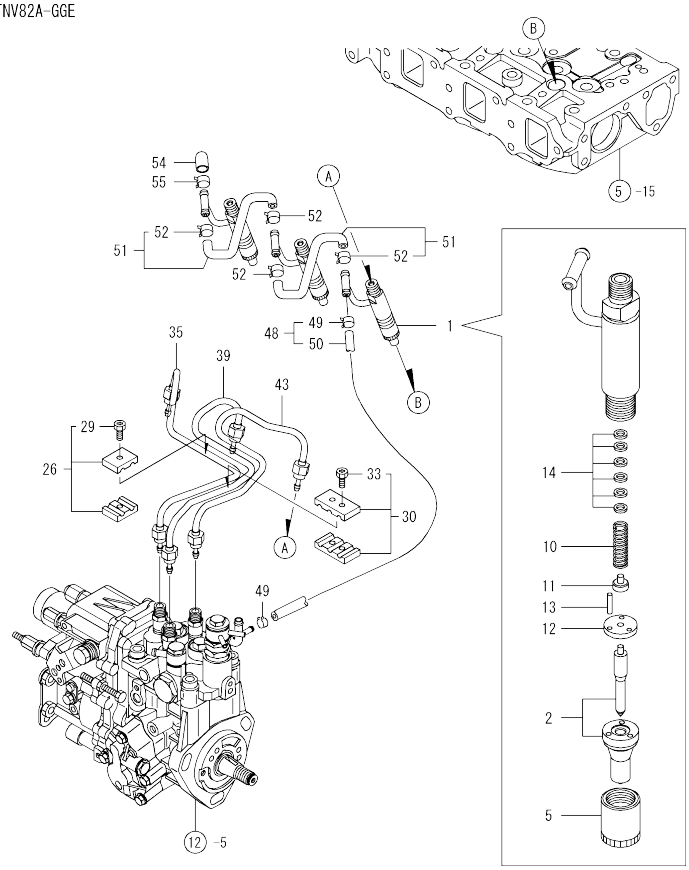

No.	Lev.	Parts No.	Description	Q'ty (A)	(B)	(C)	(D)	(E)	(F)	I	R
1	1	719946-53100	VALVE ASSY,INJECTION				3	3	3		
2	2	119946-53000	VALVE ASSY,INJECTION				3	3	3		
5	2	114250-53080	NUT, NOZZLE D16.95				3	3	3		
10	2	114250-53120	SPRING, NOZZLE				3	3	3		
11	2	114250-53130	SEAT, SPRING				3	3	3		
12	2	114250-53140	PLATE				3	3	3		
13	2	114250-53210	PIN				6	6	6		
14	2	114250-53400	SHIM SET				3	3	3		
26	1	119305-59120	RETAINER, PIPE				1	1	1		
29	2	129150-59131	BOLT, M4X14				1	1	1		
30	1	129150-59120	RETAINER, PIPE				1	1	1		
33	2	129150-59131	BOLT, M4X14				2	2	2		
35	1	119802-59810	PIPE ASSY, INJECTION				1	1	1		
39	1	119802-59820	PIPE ASSY, INJECTION				1	1	1		
43	1	119802-59830	PIPE ASSY, INJECTION				1	1	1		
48	1	119802-59550	PIPE ASSY, RETURN				1	1	1		
49	2	124722-59050	CLIP, HOSE 9				2	2	2		
50	2	119802-59560	PIPE, FUEL RETURN				1	1	1		
51	1	129486-59551	PIPE ASSY, RETURN				2	2	2		
52	2	124722-59050	CLIP, HOSE 9				4	4	4		
54	1	119593-59580	CAP				1	1	1		
55	1	124060-77680	CLIP, HOSE 10				1	1	1		

N:Old ◄Yes/No► New. Q:Old ◄No/Yes► New. R:Old ◄Yes/Yes► New. S:Old ◄No/No► New. W:Add. Z:Discontinued. F:Interchangeable by set. K:Q'ty Change

Copyright (C) YANMAR CO., LTD. All RightsReserved.

Fig.15. FUEL PIPING

(A)=3TNV82A-DSA
(B)=3TNV82A-DSA2
(C)=3TNV82A-DSA3
(D)=3TNV82A-GGE
(E)=3TNV82A-GGET
(F)=3TNV82A-GGECA

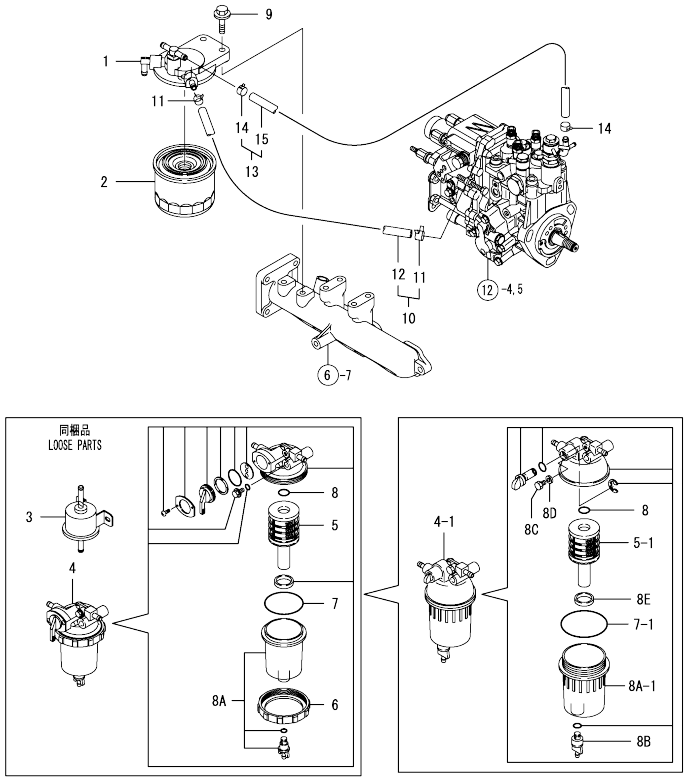

No.	Lev.	Parts No.	Description	Q'ty (A)	(B)	(C)	(D)	(E)	(F)	I	R
1	1	129004-55610	BRACKET, FILTER	1	1	1	1	1	1		
2	1	119802-55800	FILTER, FUEL	1	1	1	1	1	1		
3	1	119225-52102	PUMP ASSY, FUEL FEED	1	1	1	1	1	1		
4	1	119802-55700	SEPARATOR ASSY	1	1	1	1	1	1		
4-1	1	129242-55700	SEPARATOR ASSY	1	1	1	1	1	1	N	
	(A=*2008.08.)	(B=*2008.08.)	(C=*2008.08.) (D=*2008.08.)	(E=*2008.08.)			(F=*2008.08.)				
5	2	119802-55710	ELEMENT	1	1	1	1	1	1		
5-1	2	129242-55730	ELEMENT	1	1	1	1	1	1	S	
	(A=*2008.08.)	(B=*2008.08.)	(C=*2008.08.) (D=*2008.08.)	(E=*2008.08.)			(F=*2008.08.)				
6	2	129100-55690	RING, RETAINING	1	1	1	1	1	1	Z	
	(A=*2008.08.)	(B=*2008.08.)	(C=*2008.08.) (D=*2008.08.)	(E=*2008.08.)			(F=*2008.08.)				
7	2	24321-000650	O-RING, 1AG65.0	1	1	1	1	1	1		
7-1	2	24321-000750	O-RING, 1AG75.0	1	1	1	1	1	1	S	
	(A=*2008.08.)	(B=*2008.08.)	(C=*2008.08.) (D=*2008.08.)	(E=*2008.08.)			(F=*2008.08.)				
8	2	24311-000160	O-RING, 1AP16.0	1	1	1	1	1	1		
8A	2	119802-55730	CUP ASSY	1	1	1	1	1	1	W	
	(A=FROM 1ST)	(B=FROM 1ST)	(C=FROM 1ST) (D=FROM 1ST)	(E=FROM 1ST)			(F=FROM 1ST)				
8A-1	2	129242-55720	CUP	1	1	1	1	1	1	S	
	(A=*2008.08.)	(B=*2008.08.)	(C=*2008.08.) (D=*2008.08.)	(E=*2008.08.)			(F=*2008.08.)				
8B	2	129242-55740	PLUG, DRAIN	1	1	1	1	1	1	W	
	(A=*2008.08.)	(B=*2008.08.)	(C=*2008.08.) (D=*2008.08.)	(E=*2008.08.)			(F=*2008.08.)				
8C	2	129242-55750	VALVE, AIR VENT	1	1	1	1	1	1	W	
	(A=*2008.08.)	(B=*2008.08.)	(C=*2008.08.) (D=*2008.08.)	(E=*2008.08.)			(F=*2008.08.)				
8D	2	129242-55760	GASKET	1	1	1	1	1	1	W	
	(A=*2008.08.)	(B=*2008.08.)	(C=*2008.08.) (D=*2008.08.)	(E=*2008.08.)			(F=*2008.08.)				
8E	2	129242-55770	FLOAT	1	1	1	1	1	1	W	
	(A=*2008.08.)	(B=*2008.08.)	(C=*2008.08.) (D=*2008.08.)	(E=*2008.08.)			(F=*2008.08.)				
9	1	26106-080302	BOLT, M8X 30 PLATED	2	2	2	2	2	2		
10	1	129210-59100	PIPE ASSY, FUEL	1	1	1	1	1	1		
11	2	124766-59050	CLIP, HOSE 12	2	2	2	2	2	2		
12	2	105025-59580	PIPE, FUEL	1	1	1	1	1	1		
13	1	129210-59230	PIPE ASSY, FUEL	1	1	1	1	1	1		
14	2	124766-59050	CLIP, HOSE 12	2	2	2	2	2	2		
15	2	129555-59511	PIPE, FUEL	1	1	1	1	1	1		

N:Old ←Yes/No→ New. Q:Old ←No/Yes→ New. R:Old ←Yes/Yes→ New. S:Old ←No/No→ New. W:Add. Z:Discontinued. F:Interchangeable by set. K:Q'ty Change

Copyright (C) YANMAR CO., LTD. All RightsReserved.

Fig.16. STARTER MOTOR

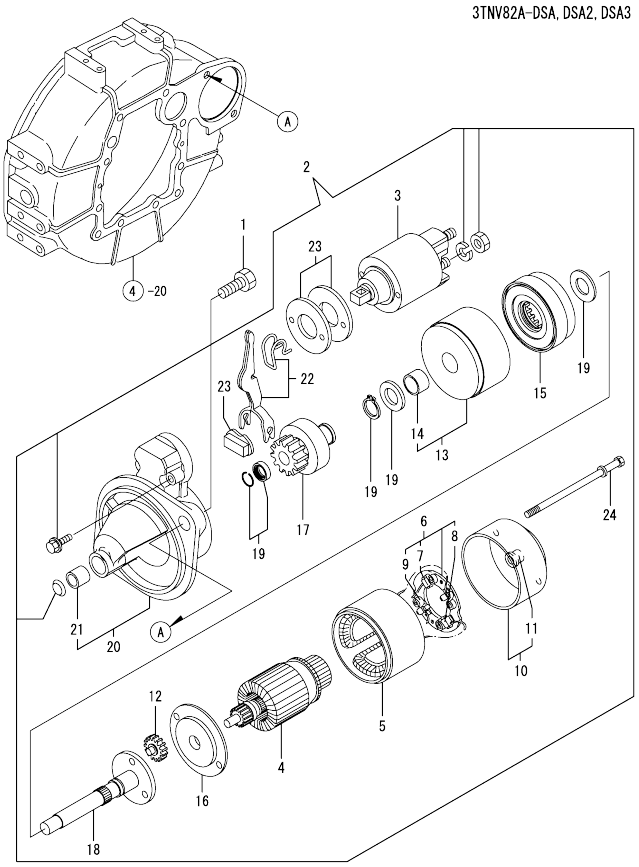

(A)=3TNV82A-DSA
(B)=3TNV82A-DSA2
(C)=3TNV82A-DSA3
(D)=3TNV82A-GGE
(E)=3TNV82A-GGET
(F)=3TNV82A-GGECA

No.	Lev.	Parts No.	Description	Q'ty (A)	(B)	(C)	(D)	(E)	(F)	I	R
1	1	26116-120202	BOLT, M12X 20 PLATED	2	2	2					
2	1	129242-77010	STARTER, 1.7	1	1	1					
3	2	129698-77020	SWITCH ASSY	1	1	1					
4	2	129242-77100	ARMATURE ASSY	1	1	1					
5	2	129242-77110	YOKE ASSY	1	1	1					
6	2	129242-77120	HOLDER ASSY, BRUSH	1	1	1					
7	3	129242-77130	BRUSH	2	2	2					
8	3	129242-77140	BRUSH SET	1	1	1					
9	3	129242-77150	SPRING	4	4	4					
10	2	129242-77160	COVER ASSY	1	1	1					
11	3	129242-77170	METAL	1	1	1					
12	2	118400-77170	GEAR	3	3	3					
13	2	129242-77180	BRACKET	1	1	1					
14	3	129698-77190	BRACKET	1	1	1					
15	2	129698-77200	GEAR, INTERNAL	1	1	1					
16	2	129242-77210	BRACKET	1	1	1					
17	2	129698-77220	PINION ASSY	1	1	1					
18	2	129698-77230	SHAFT	1	1	1					
19	2	129698-77250	WASHER SET	1	1	1					
20	2	129242-77260	CASE ASSY	1	1	1					
21	3	X2114535200	METAL, STARTER	1	1	1					
22	2	129242-77270	LEVER SET	1	1	1					
23	2	129242-77280	COVER ASSY, DUST	1	1	1					
24	2	124195-77770	BOLT, THROUGH	2	2	2					

N:Old ←Yes/No→ New. Q:Old ←No/Yes→ New. R:Old ←Yes/Yes→ New. S:Old ←No/No→ New. W:Add. Z:Discontinued. F:Interchangeable by set. K:Q'ty Change

Copyright (C) YANMAR CO., LTD. All RightsReserved.

Fig.17. STARTER MOTOR

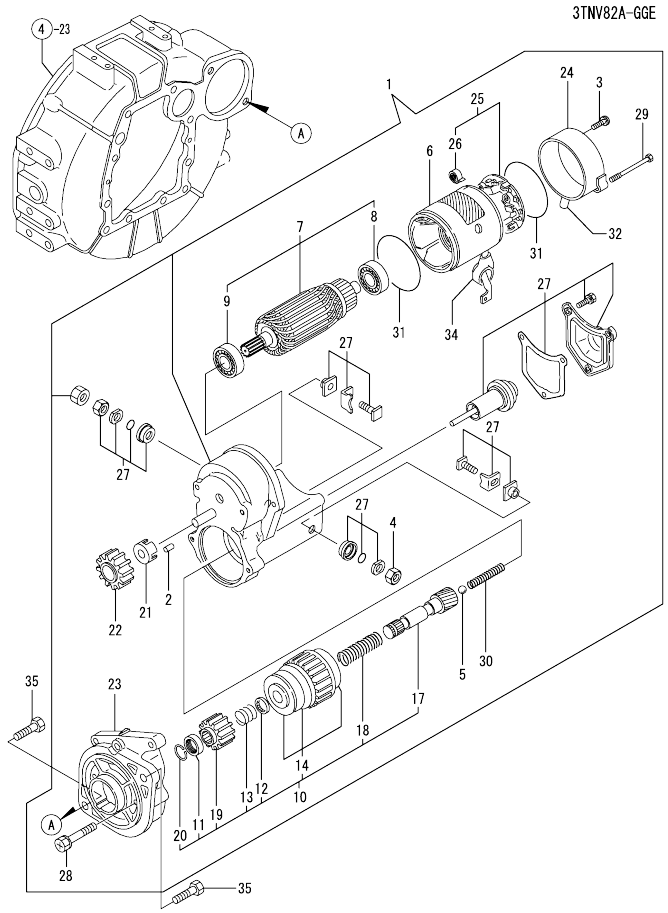

(A)=3TNV82A-DSA
(B)=3TNV82A-DSA2
(C)=3TNV82A-DSA3
(D)=3TNV82A-GGE
(E)=3TNV82A-GGET
(F)=3TNV82A-GGECA

No.	Lev.	Parts No.	Description	Q'ty (A)	(B)	(C)	(D)	(E)	(F)	I	R
1	1	129129-77010	STARTER ASSY				1	1	1		
2	2	X0283060061	ROLLER				5	5	5		
3	2	129129-77460	SCREW				2	2	2		
4	2	X9490561370	NUT				1	1	1		
5	2	X9491200240	BALL				1	1	1		
6	2	129129-77210	YOKE ASSY				1	1	1		
7	2	129129-77220	ARMATURE ASSY				1	1	1		
8	3	129129-77230	BEARING				1	1	1		
9	3	129129-77240	BEARING				1	1	1		
10	2	129129-77250	STARTER				1	1	1		
11	3	X0280210230	NUT				1	1	1		
12	3	X0283270140	RETAINER				1	1	1		
13	3	X9491703371	SPRING, COIL				1	1	1		
14	3	129129-77390	CLUTCH ASSY				1	1	1		
17	3	129129-77400	SHAFT				1	1	1		
18	3	129129-77410	SPRING, COIL				1	1	1		
19	3	129129-77420	PINION, STARTER				1	1	1		
20	3	129129-77430	RING				1	1	1		
21	2	129129-77260	RETAINER				1	1	1		
22	2	129129-77270	PINION				1	1	1		
23	2	129129-77280	HOUSING				1	1	1		
24	2	129129-77290	FRAME				1	1	1		
25	2	129129-77300	HOLDER ASSY				1	1	1		
26	3	X9491730461	SPRING				4	4	4		
27	2	129129-77310	SWITCH ASSY				1	1	1		
28	2	129129-77320	BOLT				2	2	2		
29	2	129129-77330	BOLT				2	2	2		
30	2	129129-77340	SPRING				1	1	1		
31	2	129129-77350	O-RING				2	2	2		
32	2	129129-77362	COVER				1	1	1		
34	2	129129-77380	CAP				1	1	1		
35	1	26116-120252	BOLT, M12X 25 PLATED				2	2	2		

N:Old ◄Yes/No► New. Q:Old ◄No/Yes► New. R:Old ◄Yes/Yes► New. S:Old ◄No/No► New. W:Add. Z:Discontinued. F:Interchangeable by set. K:Q'ty Change

Copyright (C) YANMAR CO., LTD. All RightsReserved.

Fig.18. GENERATOR

(A)=3TNV82A-DSA
(B)=3TNV82A-DSA2
(C)=3TNV82A-DSA3
(D)=3TNV82A-GGE
(E)=3TNV82A-GGET
(F)=3TNV82A-GGECA

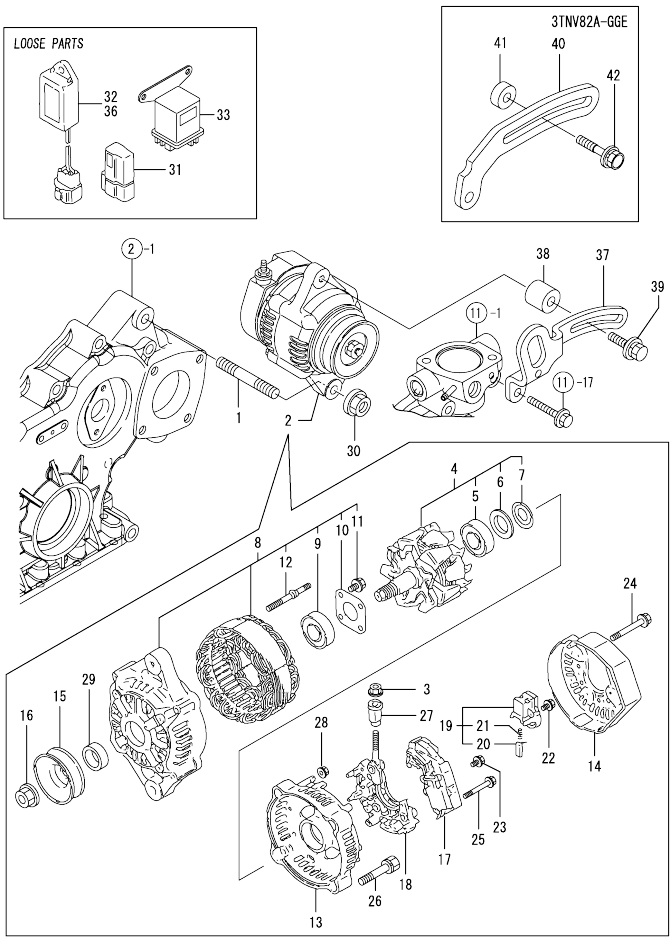

No.	Lev.	Parts No.	Description	Q'ty (A)	(B)	(C)	(D)	(E)	(F)	I	R
1	1	129795-01900	STUD	1	1	1	1	1	1		
2	1	129423-77200	GENERATOR, 12V-40A	1	1	1	1	1	1		
3	2	X9490561001	NUT	1	1	1	1	1	1		
4	2	119620-77380	ROTOR ASSY	1	1	1	1	1	1		
5	3	123501-79240	BEARING, BALL	1	1	1	1	1	1		
6	3	119620-79250	COVER	1	1	1	1	1	1		
7	3	119620-79360	WASHER, THRUST	1	1	1	1	1	1		
8	2	119620-77421	FRAME ASSY, DRIVE	1	1	1	1	1	1		
9	3	119620-79200	BEARING, BALL	1	1	1	1	1	1		
10	3	119620-79210	PLATE, RETAINER	1	1	1	1	1	1		
11	3	119620-79220	SCREW	4	4	4	4	4	4		
12	3	119620-79230	STUD	2	2	2	2	2	2		
13	2	119620-77440	FRAME ASSY	1	1	1	1	1	1		
14	2	129240-79300	COVER	1	1	1	1	1	1		
15	2	119620-77461	PULLEY	1	1	1	1	1	1		
16	2	119620-77471	NUT	1	1	1	1	1	1		
17	2	129423-77710	REGULATOR ASSY	1	1	1	1	1	1		
18	2	119620-79260	HOLDER	1	1	1	1	1	1		
19	2	119620-79270	HOLDER, BRUSH	1	1	1	1	1	1		
20	3	119620-77480	BRUSH ASSY	2	2	2	2	2	2		
21	3	119620-79280	SPRING	2	2	2	2	2	2		
22	2	119620-79290	SCREW	6	6	6	6	6	6		
23	2	119620-79300	SCREW	1	1	1	1	1	1		
24	2	119620-79310	BOLT	3	3	3	3	3	3		
25	2	119620-79320	SCREW	2	2	2	2	2	2		
26	2	119620-79330	BOLT	2	2	2	2	2	2		
27	2	119620-79340	BUSH, INSULATION	1	1	1	1	1	1		
28	2	119620-79350	NUT	2	2	2	2	2	2		
29	2	119620-77490	COLLAR	1	1	1	1	1	1		
30	1	26306-100002	NUT, M10	1	1	1	1	1	1		
31	1	119643-66900	DIODE	1	1	1	1	1	1		
32	1	129211-77920	TIMER	1	1	1	1	1	1		
33	1	119650-77910	RELAY ASSY, GLOW	1	1	1	1	1	1		
36	1	128300-77920	TIMER	1	1	1					
37	1	119808-77330	ADJUSTER	1	1	1					
38	1	124732-77340	SPACER	1	1	1					
39	1	26014-080452	BOLT, M8X 45	1	1	1					
40	1	119940-77330	ADJUSTER				1	1	1		
41	1	119940-77270	SPACER, GENERATOR				1	1	1		
42	1	119802-77340	BOLT, ADJUSTER				1	1	1		

N:Old ←Yes/No→ New. Q:Old ←No/Yes→ New. R:Old ←Yes/Yes→ New. S:Old ←No/No→ New. W:Add. Z:Discontinued. F:Interchangeable by set. K:Q'ty Change

Copyright (C) YANMAR CO., LTD. All RightsReserved.

Fig.19. GASKET SET

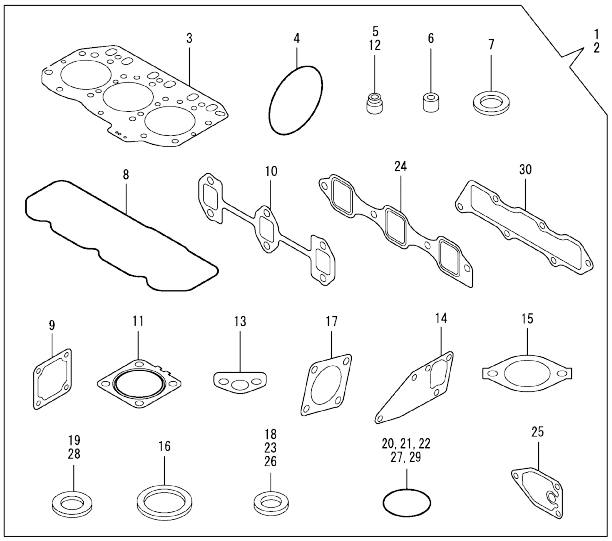

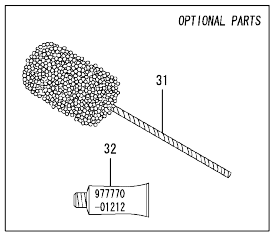

(A)=3TNV82A-DSA
(B)=3TNV82A-DSA2
(C)=3TNV82A-DSA3
(D)=3TNV82A-GGE
(E)=3TNV82A-GGET
(F)=3TNV82A-GGECA

No.	Lev.	Parts No.	Description	Q'ty (A)	(B)	(C)	(D)	(E)	(F)	I	R
1	1	719823-92780	GASKET SET	1	1	1					1
2	1	719823-92790	GASKET SET				1	1	1		1
3	2	119812-01330	GASKET, HEAD	1	1	1	1	1	1		
4	2	121850-51960	O-RING	1	1	1	1	1	1		
5	2	124950-11340	SEAL, VALVE STEM	3	3	3	3	3	3		
6	2	119802-11870	PROTECTOR, NOZZLE	3	3	3	3	3	3		
7	2	119625-11880	SEAT, NOZZLE	3	3	3	3	3	3		
8	2	119802-11310	GASKET, BONNET	1	1	1	1	1	1		
9	2	129150-77511	GASKET	1	1	1	1	1	1		
10	2	119810-13110	GASKET	1	1	1	1	1	1		
11	2	129004-13200	GASKET, SILENCER	1	1	1	1	1	1		
12	2	124160-11340	SEAL, VALVE STEM	3	3	3	3	3	3		
13	2	129150-35041	GASKET	1	1	1	1	1	1		
14	2	129486-42050	GASKET, WATER PUMP	1	1	1	1	1	1		
15	2	129795-49551	GASKET	1	1	1	1	1	1		
16	2	129150-49811	GASKET, THERMOSTAT	1	1	1	1	1	1		
17	2	124240-01883	GASKET	1	1	1					
18	2	22190-080002	WASHER, SEAL 6	2	2	2	2	2	2		
19	2	124465-44950	GASKET, 16	2	2	2	2	2	2		
20	2	24311-000120	O-RING, 1AP12.0	3	3	3	3	3	3		
21	2	24311-000320	O-RING, 1AP32.0	2	2	2	2	2	2		
22	2	24341-000240	O-RING, 1AS24.0	1	1	1	1	1	1		
23	2	22190-100002	WASHER, SEAL 10	2	2	2	2	2	2		
24	2	119810-12112	GASKET, MANIFOLD	1	1	1					
25	2	129150-35111	GASKET	1	1	1	1	1	1		
26	2	22190-220002	WASHER, SEAL 22	1	1	1	1	1	1		
27	2	119609-32040	O-RING, P16	4	4	4	4	4	4		
28	2	23414-080000	GASKET, 8X1.0	1	1	1	1	1	1		
29	2	24321-000800	O-RING, 1AG80.0	1	1	1					
30	2	119813-12110	GASKET, MANIFOLD				1	1	1		
31	1	129400-92420	HONE	1	1	1	1	1	1		1
32	1	977770-01212	GASKET, LIQUID	1	1	1	1	1	1		1

Remarks
(1)Optional parts.

N:Old ←Yes/No→ New. Q:Old ←No/Yes→ New. R:Old ←Yes/Yes→ New. S:Old ←No/No→ New. W:Add. Z:Discontinued. F:Interchangeable by set. K:Q'ty Change

Copyright (C) YANMAR CO., LTD. All RightsReserved.

Parts No. Index

Parts No.	Fig. No.	Ref. No.
104211-11180	5	27
104211-11370	5	14
105025-59580	15	12
114250-39450	10	9
114250-53080	13	5
	14	5
114250-53120	13	10
	14	10
114250-53130	13	11
	14	11
114250-53140	13	12
	14	12
114250-53210	13	13
	14	13
114250-53400	13	14
	14	14
118400-77170	16	12
119131-18320	7	4
119225-52102	15	3
119305-59120	13	26
	14	26
119593-59580	13	54
	14	54
119609-32040	2	17
	3	17
	19	27
119620-01750	4	16
119620-02020	1	12
119620-77380	18	4
119620-77421	18	8
119620-77440	18	13
119620-77461	18	15
119620-77471	18	16
119620-77480	18	20
119620-77490	18	29
119620-79200	18	9
119620-79210	18	10
119620-79220	18	11
119620-79230	18	12
119620-79250	18	6
119620-79260	18	18
119620-79270	18	19
119620-79280	18	21
119620-79290	18	22
119620-79300	18	23
119620-79310	18	24
119620-79320	18	25
119620-79330	18	26
119620-79340	18	27
119620-79350	18	28

Parts No.	Fig. No.	Ref. No.
119620-79360	18	7
119625-11880	5	32
	19	7
119640-01640	4	4
119643-66900	18	31
119650-77910	18	33
119802-01190	1	38
119802-01520	3	12
119802-01560	2	13
	3	13
119802-03010	5	41
119802-03080	6	10
119802-03090	6	4
119802-03110	5	43
119802-03121	5	44
119802-03130	5	45
119802-03141	5	46
119802-11100	5	24
119802-11110	5	25
119802-11241	5	3
119802-11251	5	4
119802-11260	5	6
119802-11270	5	7
119802-11280	5	8
119802-11310	5	49
	19	8
119802-11350	5	40
119802-11650	5	10
119802-11700	5	15
119802-11810	5	21
119802-11870	5	55
	19	6
119802-11900	5	33
119802-12100	6	13
119802-12130	6	7
119802-13109	7	1
119802-13640	7	3
119802-13740	7	6
119802-14580	8	15
119802-14590	8	16
119802-21002	9	1
119802-21202	9	5
119802-21650	9	36
119802-21660	9	48
119802-22080	9	12
119802-22500	9	14
119802-25051	8	4
119802-25070	8	8
119802-25100	8	5
119802-25901	8	11

Parts No.	Fig. No.	Ref. No.
119802-32070	2	8
	3	8
119802-32100	2	7
	3	7
119802-32111	2	18
	3	18
119802-32120	2	19
	3	19
119802-32130	2	20
	3	20
119802-34801	10	1
119802-35100	10	38
119802-35110	10	25
		39
119802-39450	10	11
119802-42000	11	1
119802-49610	11	23
119802-49620	11	28
119802-49711	11	24
119802-49721	11	29
119802-49730	11	25
119802-51250	12	1
119802-53001	13	2
119802-55700	15	4
119802-55710	15	5
119802-55730	15	8 A
119802-55800	15	2
119802-59320	11	27
119802-59550	13	48
	14	48
119802-59560	13	50
	14	50
119802-59810	14	35
119802-59820	14	39
119802-59830	14	43
119802-59960	13	35
119802-59970	13	39
119802-59980	13	43
119802-77340	18	42
119808-77330	18	37
119810-01200	1	30
119810-01730	4	1
119810-01770	4	3
119810-02870	1	32
119810-02930	1	27
119810-02940	1	35
119810-11120	5	26
119810-12112	6	6
	19	24
119810-13110	7	2

Parts No.	Fig. No.	Ref. No.
119810-13110	19	10
119810-14400	8	2
119810-23200	9	25
119810-23600	9	26
119810-23610	9	28
119810-23910	9	24
119810-35300	10	4
119810-42051	11	3
119810-42120	11	4
119810-42281	11	8
119810-42290	11	9
119812-01330	1	31
	19	3
119813-12110	6	12
	19	30
119813-22300	9	18
119865-21600	9	40
		47
119888-01600	4	20
119888-21450	9	41
119940-59130	10	33
119940-77270	18	41
119940-77330	18	40
119944-49300	10	37
119946-53000	14	2
120270-54410	5	34
121023-01550	2	28
	3	28
121111-21501	9	11
121250-44901	11	38
121267-44760	11	31
121450-42450	11	36
121520-34810	10	2
121850-21680	9	10
121850-51960	2	21
	3	21
	19	4
123501-79240	18	5
124060-01050	1	6
124060-11800	5	19
124060-77680	13	55
	14	55
124160-01751	2	14
	3	14
	5	39
124160-01910	1	4
		14
124160-11340	5	28
	19	12
124160-11360	5	52

Parts No. Index

Parts No.	Fig. No.	Ref. No.
124160-39140	10	10
124195-77770	16	24
124240-01871	2	15
		32
	3	15
124240-01883	2	33
	19	17
124465-44950	11	37
		39
	19	19
124550-21600	9	52
124722-59050	11	26
		30
	13	49
		52
	14	49
		52
124732-77340	18	38
124766-59050	15	11
		14
124950-11340	5	29
	19	5
128300-77920	18	36
129001-01250	1	7
129001-11340	6	8
129001-32330	2	11
	3	11
129001-91841	2	22
	3	22
129004-13200	7	7
	19	11
129004-55610	15	1
129005-01520	2	12
129005-59830	10	12
129006-35100	10	24
129006-44480	10	27
129054-42320	11	11
129100-01580	4	9
		15
	9	2
129100-01640	4	10
129100-35140	10	40
129100-55690	15	6
129120-77501	6	3
129129-01600	4	22
129129-77010	17	1
129129-77210	17	6
129129-77220	17	7
129129-77230	17	8
129129-77240	17	9

Parts No.	Fig. No.	Ref. No.
129129-77250	17	10
129129-77260	17	21
129129-77270	17	22
129129-77280	17	23
129129-77290	17	24
129129-77300	17	25
129129-77310	17	27
129129-77320	17	28
129129-77330	17	29
129129-77340	17	30
129129-77350	17	31
129129-77362	17	32
129129-77380	17	34
129129-77390	17	14
129129-77400	17	17
129129-77410	17	18
129129-77420	17	19
129129-77430	17	20
129129-77460	17	3
129150-02450	8	17
129150-03070	5	42
129150-11230	5	11
129150-11280	5	9
129150-11750	5	13
129150-14101	8	20
129150-14200	8	1
129150-25301	8	10
129150-35041	10	3
	19	13
129150-35111	10	18
	19	25
129150-35170	10	19
129150-49811	11	19
	19	16
129150-59120	13	30
	14	30
129150-59131	13	29
		33
	14	29
		33
129150-77511	6	1
	19	9
129155-42350	11	44
129155-49801	11	18
129210-59100	15	10
129210-59230	15	13
129211-77920	18	32
129240-79300	18	14
129242-55700	15	4 -1
129242-55720	15	8 A-1

Parts No.	Fig. No.	Ref. No.
129242-55730	15	5 -1
129242-55740	15	8 B
129242-55750	15	8 C
129242-55760	15	8 D
129242-55770	15	8 E
129242-77010	16	2
129242-77100	16	4
129242-77110	16	5
129242-77120	16	6
129242-77130	16	7
129242-77140	16	8
129242-77150	16	9
129242-77160	16	10
129242-77170	16	11
129242-77180	16	13
129242-77210	16	16
129242-77260	16	20
129242-77270	16	22
129242-77280	16	23
129335-44740	11	42
129350-49530	11	33
129400-92420	19	31
129403-42380	11	41
129410-03990	6	5
		11
129417-33110	10	23
129417-35150	10	26
129418-32320	2	10
	3	10
129423-77200	18	2
129423-77710	18	17
129430-26070	2	35
129486-01670	4	13
129486-42050	11	22
	19	14
129486-59551	13	51
	14	51
129488-21590	9	37
129508-33010	10	22
129508-49030	10	28
129508-49040	10	32
129555-59511	15	15
129612-01600	4	21
129698-77020	16	3
129698-77190	16	14
129698-77200	16	15
129698-77220	16	17
129698-77230	16	18
129698-77250	16	19
129792-22400	9	19

Parts No.	Fig. No.	Ref. No.
129795-01780	4	12
129795-01800	2	6
	3	6
129795-01900	18	1
129795-01950	2	16
	3	16
129795-02411	1	13
129795-21661	9	9
129795-49551	11	34
	19	15
129900-07900	5	1
129900-32130	2	9
	3	9
158552-51151	8	12
171008-03990	10	29
171051-01921	1	5
171056-49120	10	20
171340-44740	11	45
171420-01600	4	23
171420-21580	9	44
171420-21590	9	49
22190-080002	10	14
		15
	19	18
22190-100002	10	16
	19	23
22190-220002	4	6
	19	26
22217-140000	8	13
22351-030010	9	8
22351-060012	5	35
22512-070140	8	21
	9	6
22857-500100	5	50
		51
23080-015000	10	31
		35
23080-018000	10	36
23414-080000	11	20
	19	28
23857-030000	10	13
23876-030000	2	4
	3	4
	11	13
23876-040000	2	5
	3	5
24104-062054	9	42
24311-000120	5	53
	19	20
24311-000160	15	8

Parts No. Index

Parts No.	Fig. No.	Ref. No.
24311-000320	2	23
	3	23
	5	54
	19	21
24321-000650	15	7
24321-000750	15	7 -1
24321-000800	2	36
	19	29
24341-000240	2	29
	3	29
	19	22
25132-003700	11	40
25132-003800	11	43
26014-080452	18	39
26106-060142	11	14
26106-060162	2	30
	3	30
26106-060202	11	15
26106-060302	11	32
26106-080122	11	21
26106-080142	5	2
	8	3
26106-080162	2	24
		25
		34
	3	24
		25
	4	7
	12	2
26106-080202	6	14
	10	21
	12	3
26106-080222	9	43
	11	35
26106-080252	2	37
	5	36
	6	9
26106-080302	15	9
26106-080352	4	2
	6	2
	10	8
	11	16
26106-080402	8	9
26106-080452	4	8
	5	37
26106-080502	5	38
26106-080552	2	26
	3	26
	11	17
26106-080802	6	15

Parts No.	Fig. No.	Ref. No.
26106-100302	2	38
26116-120202	16	1
26116-120252	17	35
26206-100202	4	19
26206-100252	4	17
26206-100302	4	18
26306-080002	2	27
	3	27
	7	5
26306-100002	18	30
26366-060002	10	17
26776-140002	8	14
27241-120000	1	8
27241-300000	1	9
27241-400000	5	23
27310-070001	5	30
719802-01500	3	1
719802-01560	1	1
719802-22900	9	30
719802-22950	9	32
719802-51310	12	4
719802-53101	13	1
719810-02980	1	24
719810-23100	9	20
719823-92780	19	1
719823-92790	19	2
719946-51390	12	5
719946-53100	14	1
729005-01500	2	1
977770-01212	2	31
	3	31
	4	14
	5	56
	19	32
X0280210230	17	11
X0283060061	17	2
X0283270140	17	12
X2114535200	16	21
X9490561001	18	3
X9490561370	17	4
X9491200240	17	5
X9491703371	17	13
X9491730461	17	26

Parts No.	Fig. No.	Ref. No.

Parts No.	Fig. No.	Ref. No.