YANMAR

PARTS CATALOG

0CW10-M52300EN

Last update Apr., 2017

PREFACE

1. This parts catalog is the 1st edition of 3TNV82A-GAGR for AGRINET.

Pub.No. : 0CW10-G52300
Published : July, 2009

2. Model name

Engine model	Vehicle	Vehicle made by
3TNV82A-GAGR	GENERATOR	AGRINET

Directions for the Parts Catalog.

1.The parts stipulated in this Parts Catalog are not necessarily standard equipped parts.
2.Parts may change without prior notice.
3.The following is an example of the Parts Catalog format.

0CF10-G21601 29. FUEL INJECTION PUMP(W/BOOST)

(A)=4JH-DT
(B)=4JH-DTZ
(C)=4JH-DTZP
(D)=4JH-DTZA
(E)=4JH-DTZY
(F)=

① REF.	② LEV.	PARTS NO.	DESCRIPTION	Q'TY (A)	(B)	(C)	(D)	(E)	(F)	③ I	⑤ R
1	1	729595-51390	FUEL INJECTION PUMP	1	1	1	1	1			1
1-1	1	729595-51391	FUEL INJECTION PUMP	1	1	1	1	1		N	1
	(A=E00185)	(B=E00200)									
3	2	26022-060162	SCREW M 6X 16	9	9	9	9	9			
3-1 ④	2	26022-060162	SCREW M 6X 16	4	4	4	4	4		K	
	(A=E00156)	(B=E00156)	(C=E00156) (D=E00156)	(E=E00156)							
4	2	129470-51040	CAMSHAFT	1	1	1	1	1			
5	2	122710-51050	BEARING, ROLLER	2	2	2	2	2			
6	2	129470-51060	RETAINER	1	1	1	1	1			

Remarks
(1) BOOST COMPEMSATOR TYPE. OPTIONAL
PART, TO E00155,(4JH-DT, 4JH-DTZ

①Ref. No.

The Ref. No. listed may not be in accordance with the illustration Ref. No.

(Ex.) Illustration No. 1 List Ref No. 1 (Before change) → 1- 1 (After change)

For interchangeable symbols N, R and K, illustrations for new parts may be abbreviated.

②Lev. (Level)

Level indication
The numbers below indicate the level of relativity towards the main part.
1 ----- Main parts (Assembly parts)
2 ----- Sub component included in " 1 ".
3 ----- Sub component included in " 2 ".
Note) Parts that are not for sale are partially illustrated but not listed.

③Interchangeability Mark

When a part change takes place, one of the following interchangeability symbols is indicated beside the part.

Symbol	Interchangeability	Contents note
N	Old ← Yes / No → New	New Part is interchangeable for Old Part but Old Part is not interchangeable for New Part.
Q	Old ← No / Yes → New	New Part is not interchangeable for Old Part but Old Part is interchangeable for New Part.
R	Old ← Yes / Yes → New	New/ Old Parts are both interchangeable.
S	Old ← No / No → New	New/ Old Parts are both not interchangeable.
W		Part discontinued.
Z		Part newly added.
F		Not interchangeable by a single part but interchangeable together with related parts.
K		Changes only for used parts quantities.

④Effective Machine No.

When a part changes, the effective Machine No. will be indicated in the (A)-(F) column.

Product Symbol	Product No.	Product Symbol	Product No.
C	Clutch No. Compressor No.	F	Machine No. (Agricultural Equip.)
D	Drive No.	M	Machine No.
E	Engine No.	Note 1)	Date

Note 1) A date may follow the symbol. (Ex.) 1996.01
Note 2) " XXX " are for parts that could not be predicted or for engine models that could not be identified.
Note 3) (A=E00185) is the E (Engine Serial Number) for the column (A) model (in this case 4JH-DT) after the parts design change.

⑤Remarks Mark

Figures or alphabets (symbols) are entered in the remarks column.
The comments (remarks) on parts that are indicated at the bottom of the illustration are the same symbols as those stated above.

Contents

0CW10-M52300

Fig. No.	Fig. Name
3TNV82A-GAGR	
1.	CYLINDER BLOCK
2.	GEAR HOUSING
3.	FLYWHEEL HOUSING & OIL SUMP
4.	CYLINDER HEAD & BONNET
5.	SUCTION MANIFOLD
6.	EXHAUST MANIFOLD
7.	CAMSHAFT & DRIVING GEAR
8.	CRANKSHAFT & PISTON
9.	LUB.OIL SYSTEM
10.	COOLING WATER SYSTEM
11.	FUEL INJECTION PUMP
12.	GOVERNOR
13.	FUEL INJECTION VALVE
14.	FUEL LINE
15.	STARTING MOTOR
16.	GENERATOR
17.	GASKET SET & TOOLS

Fig. No.	Fig. Name

Fig.1. CYLINDER BLOCK

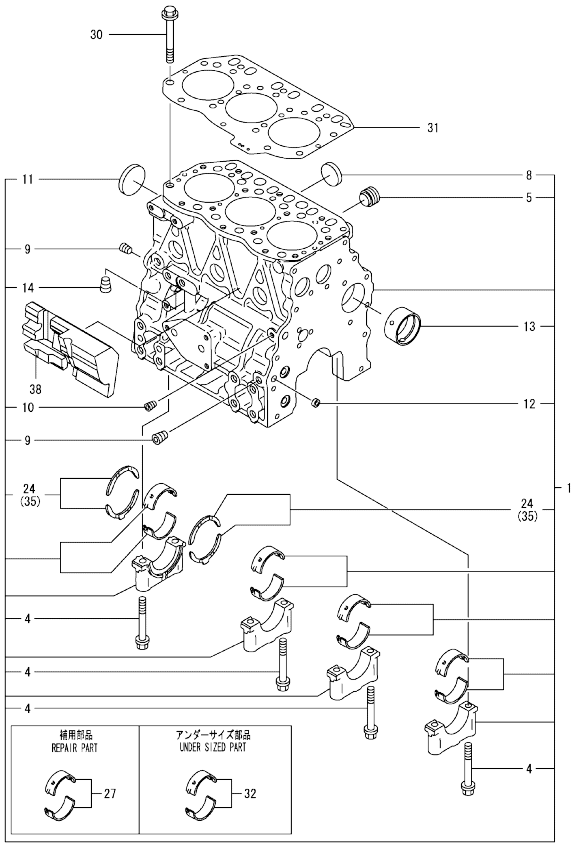

Remarks
(1)UNDER-SIZE(U.S=0.25)PART.
(2)OVER-SIZE(O.S=0.25)PART.
(3)REPAIR PART.

(A)=3TNV82A-GAGR (D)=
(B)= (E)=
(C)= (F)=

No.	Lev.	Parts No.	Description	Q'ty (A)	(B)	(C)	(D)	(E)	(F)	I	R
1	1	719802-01560	BLOCK ASSY, CYLINDER	1							
4	3	119620-02020	BOLT, METAL CAP	8							
5	3	171051-01921	PLUG, NPTF1	1							
8	3	27241-300000	PLUG 30	6							
9	2	124160-01910	PLUG, PT1/4	2							
10	2	124060-01050	PLUG, PT1/8	1							
11	2	129001-01250	PLUG, 50	1							
12	2	27241-120000	PLUG, 12	2							
13	2	129795-02412	BUSH, CAMSHAFT	1							
14	2	124160-01910	PLUG, PT1/4	1							
24	2	119810-02931	BEARING, THRUST	1							
27	1	719810-02980	BEARING, MAIN	4							3
30	1	119810-01200	BOLT, HEAD	14							
31	1	119812-01330	GASKET, HEAD	1							
32	1	119810-02871	BEARING, 0.25 US	4							1
35	1	119810-02941	BEARING, THRUST 0.25	2							2
38	1	119802-01190	SPACER	1							

N:Old ←Yes/No→ New. Q:Old ←No/Yes→ New. R:Old ←Yes/Yes→ New. S:Old ←No/No→ New. W:Add. Z:Discontinued. F:Interchangeable by set. K:Q'ty Change

Copyright (C) YANMAR CO., LTD. All RightsReserved.

Fig.2. GEAR HOUSING

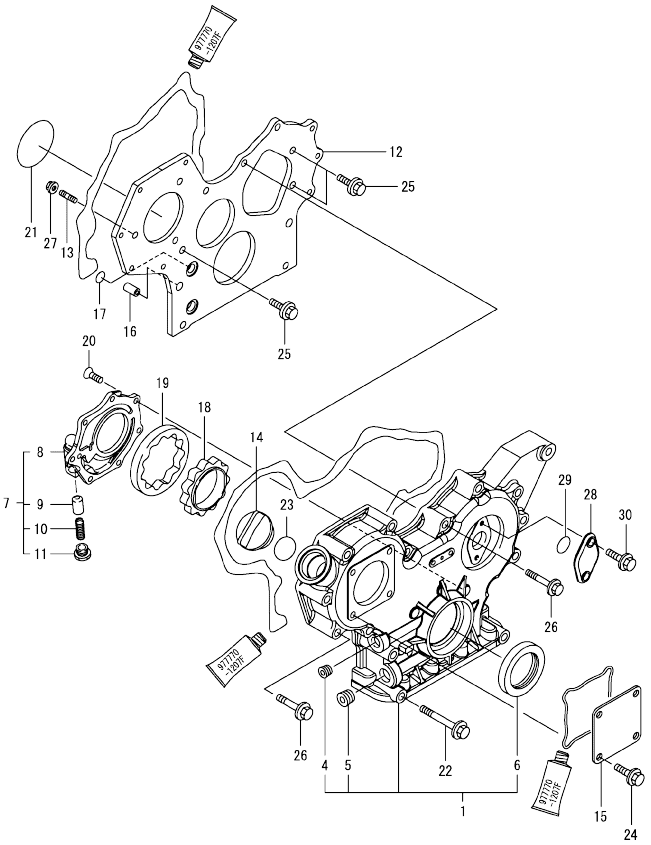

(A)=3TNV82A-GAGR (D)=
(B)= (E)=
(C)= (F)=

No.	Lev.	Parts No.	Description	Q'ty (A)	(B)	(C)	(D)	(E)	(F)	I	R
1	1	719802-01500	CASE ASSY, GEAR	1							
4	2	23876-030000	PLUG, R03	1							
5	2	23876-040000	PLUG, R04	1							
6	2	119934-01800	SEAL, OIL	1							
7	1	119802-32100	COVER ASSY	1							
8	2	119802-32070	COVER	1							
9	2	129900-32130	VALVE, RELIEF	1							
10	2	129418-32320	SPRING	1							
11	2	129001-32330	PLUG	1							
12	1	119802-01520	FLANGE, GEAR CASE	1							
13	1	119802-01561	STUD, M8X25	3							
14	1	124160-01751	COVER, FILLER	1							
15	1	124240-01871	COVER	1							
16	1	129795-01950	PIPE, KNOCK L=18	2							
17	1	119609-32040	O-RING, P16	4							
18	1	119802-32111	ROTOR, INNER	1							
19	1	119802-32120	ROTOR, OUTER	1							
20	1	119802-32130	SCREW, M6X16	7							
21	1	121850-51960	O-RING	1							
22	1	26106-080852	BOLT, M8X 85 PLATED	3							
23	1	24311-000320	O-RING, 1AP32.0	1							
24	1	26106-080162	BOLT, M8X 16 PLATED	4							
25	1	26106-080162	BOLT, M8X 16 PLATED	3							
26	1	26106-080552	BOLT, M8X 55 PLATED	12							
27	1	26306-080002	NUT, M8	3							
28	1	121023-01551	COVER	1							
29	1	24341-000240	O-RING, 1AS24.0	1							
30	1	26106-060162	BOLT, M6X 16 PLATED	2							

N:Old ←Yes/No→ New. Q:Old ←No/Yes→ New. R:Old ←Yes/Yes→ New. S:Old ←No/No→ New. W:Add. Z:Discontinued. F:Interchangeable by set. K:Q'ty Change

Copyright (C) YANMAR CO., LTD. All RightsReserved.

Fig.3. FLYWHEEL HOUSING & OIL SUMP

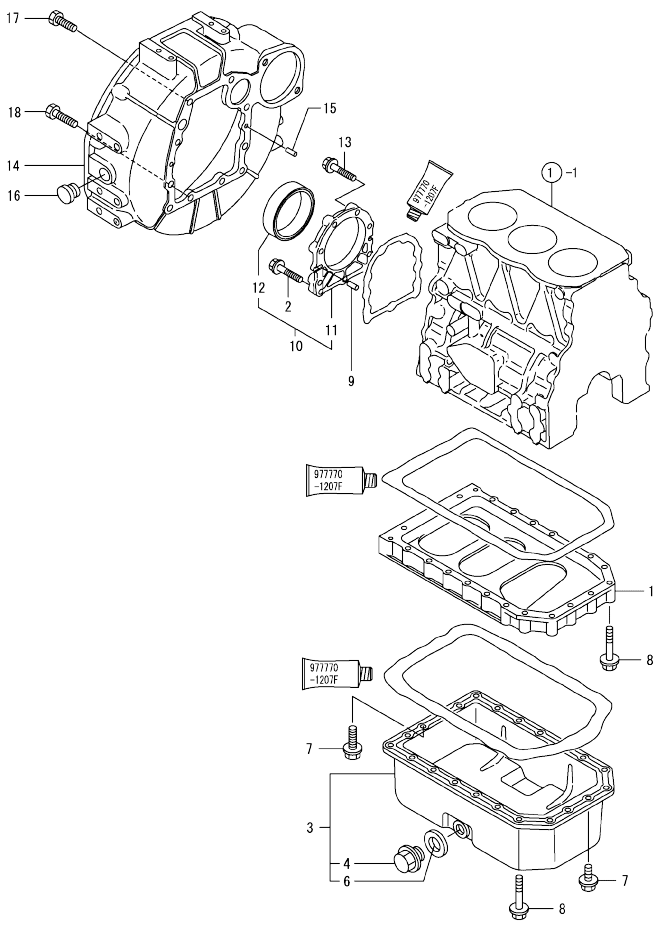

(A)=3TNV82A-GAGR (D)=
(B)= (E)=
(C)= (F)=

No.	Lev.	Parts No.	Description	Q'ty (A)	(B)	(C)	(D)	(E)	(F)	I	R
1	1	119810-01730	SPACER, OIL SUMP	1							
2	1	26106-080352	BOLT, M8X 35 PLATED	3							
3	1	119810-01770	SUMP ASSY, OIL	1							
4	2	119640-01640	PLUG, DRAIN M22	1							
6	2	22190-220002	WASHER, SEAL 22	1							
7	1	26106-080162	BOLT, M8X 16 PLATED	6							
8	1	26106-080452	BOLT, M8X 45 PLATED	22							
9	1	129100-01580	PIN, M8X16	2							
10	1	129100-01640	CASE ASSY, OIL SEAL	1							
11	2	129150-01650	CASE, OIL SEAL	1							
12	2	129795-01780	SEAL, OIL	1							
13	1	129486-01670	BOLT, M8X30	6							
14	1	171420-01600	HOUSING, FLYWHEEL	1							
15	1	129100-01580	PIN, M8X16	2							
16	1	119620-01750	CAP	1							
17	1	26206-100252	BOLT, M10X 25 PLATED	6							
18	1	26206-100302	BOLT, M10X 30 PLATED	4							

N:Old ←Yes/No→ New. Q:Old ←No/Yes→ New. R:Old ←Yes/Yes→ New. S:Old ←No/No→ New. W:Add. Z:Discontinued. F:Interchangeable by set. K:Q'ty Change

Copyright (C) YANMAR CO., LTD. All RightsReserved.

Fig.4. CYLINDER HEAD & BONNET

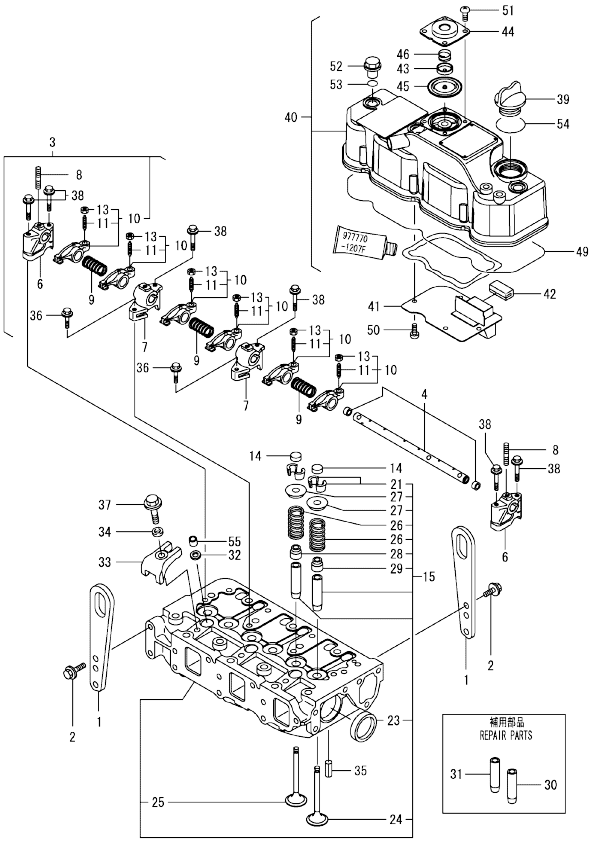

(A)=3TNV82A-GAGR
(B)=
(C)=
(D)=
(E)=
(F)=

No.	Lev.	Parts No.	Description	Q'ty (A)	(B)	(C)	(D)	(E)	(F)	I	R
1	1	129900-07900	LIFTER	2							
2	1	26106-080162	BOLT, M8X 16 PLATED	4							
3	1	119802-11241	SHAFT ASSY, ROCKER	1							
4	2	119802-11251	SHAFT, ROCKER ARM	1							
6	2	119802-11260	SUPPORT, ROCKER ARM	2							
7	2	119802-11270	SUPPORT, ROCKER ARM	2							
8	2	119802-11280	STUD	3							
9	2	129150-11280	SPRING	3							
10	2	119802-11650	ARM, ROCKER	6							
11	3	129150-11230	SCREW, VALVE ADJUST	6							
13	3	129150-11750	NUT, M8	6							
14	1	104211-11370	CAP, VALVE	6							
15	1	119946-11700	HEAD ASSY, CYLINDER	1							
21	2	27310-070001	COTTER, 7	6							
23	2	27241-400000	PLUG, 40	2							
24	2	119802-11100	VALVE, INTAKE	3							
25	2	119802-11110	VALVE, EXHAUST	3							
26	2	119810-11120	SPRING, VALVE	6							
27	2	104211-11180	RETAINER, SPRING	6							
28	2	124160-11340	SEAL, VALVE STEM	3							
29	2	119803-11340	SEAL, VALVE STEM	3							
30	1	124060-11800	GUIDE, VALVE	3							1
31	1	119802-11810	GUIDE, VALVE	3							1
32	1	119625-11880	SEAT, NOZZLE	3							
33	1	119802-11900	RETAINER, NOZZLE	3							
34	1	120270-54410	WASHER, INJECTOR	3							
35	1	22351-060012	PIN, SPRING 6.0X12	2							
36	1	26106-080252	BOLT, M8X 25 PLATED	2							
37	1	26106-080452	BOLT, M8X 45 PLATED	3							
38	1	26106-080502	BOLT, M8X 50 PLATED	6							
39	1	124160-01751	COVER, FILLER	1							
40	1	119802-11350	BONNET ASSY, HEAD	1							
41	2	119802-03010	PLATE	1							
42	2	129150-03070	BAFFLE, BREATHER	1							
43	2	119802-03110	PLATE	1							
44	2	119802-03121	COVER, DIAPHRAGM	1							
45	2	119802-03130	DIAPHRAGM	1							
46	2	119802-03141	SPRING, DIAPHRAGM	1							
49	2	119802-11310	GASKET, BONNET	1							
50	2	22857-500100	SCREW, 5X10	4							
51	2	22857-500100	SCREW, 5X10	4							
52	1	124160-11360	KNOB	3							
53	1	24311-000120	O-RING, 1AP12.0	3							
54	1	24311-000320	O-RING, 1AP32.0	1							
55	1	119802-11870	PROTECTOR, NOZZLE	3							

Remarks
(1)REPAIR PART.

N:Old $\frac{\text{Yes}}{\text{No}}$ New. Q:Old $\frac{\text{No}}{\text{Yes}}$ New. R:Old $\frac{\text{Yes}}{\text{Yes}}$ New. S:Old $\frac{\text{No}}{\text{No}}$ New. W:Add. Z:Discontinued. F:Interchangeable by set. K:Q'ty Change

Copyright (C) YANMAR CO., LTD. All RightsReserved.

Fig.5. SUCTION MANIFOLD

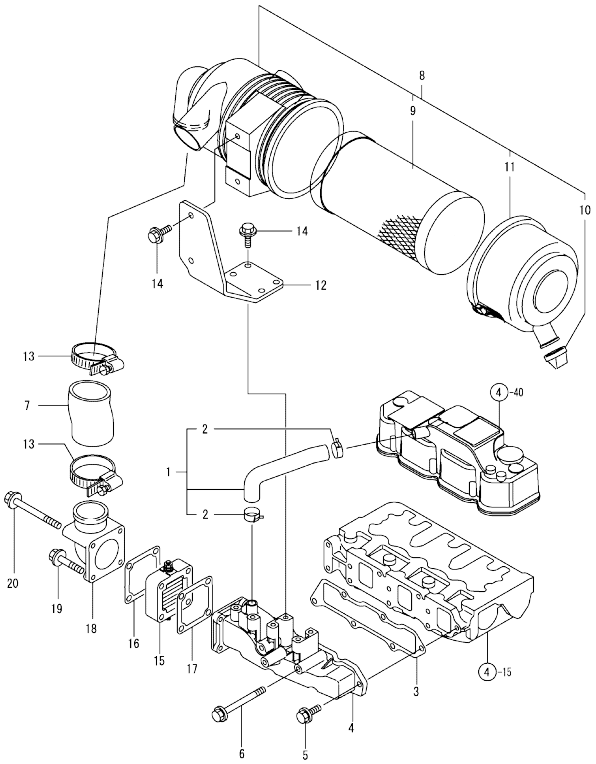

Remarks
(REMARKS)"EFFECTIVE MACHINE NO." OF
ENGINE IS INDICATED ON THE
ENGINE LABEL WHICH IS SHOWN
IN FIG.4.

(A)=3TNV82A-GAGR (D)=
(B)= (E)=
(C)= (F)=

No.	Lev.	Parts No.	Description	Q'ty (A)	(B)	(C)	(D)	(E)	(F)	I	R
1	1	119802-03080	PIPE , BREATHER	1							
2	2	129410-03990	CLAMP 22	2							
3	1	119813-12110	GASKET, MANIFOLD	1							
4	1	119802-12100	MANIFOLD, AIR INTAKE	1							
5	1	26106-080202	BOLT, M8X 20 PLATED	4							
6	1	26106-080802	BOLT, M8X 80 PLATED	2							
7	1	119910-12210	PIPE, AIR INTAKE	1							
8	1	119802-12500	CLEANER ASSY, AIR	1							
9	2	129004-12520	ELEMENT, AIR CLEANER	1							
10	2	119808-12540	VALVE, UNLOADER	1							
11	2	119866-12541	COVER ASSY	1							
12	1	119802-12560	BRACKET, AIR CLEANER	1							
13	1	23000-070000	CLAMP, 70	2							
14	1	26013-080222	BOLT, M8X 22	6							
15	1	129100-77501	HEATER	1							
16	1	129100-77510	GASKET, AIR HEATER	1							
17	1	129150-77511	GASKET	1							
18	1	171340-77520	BEND	1							
19	1	26106-080402	BOLT, M8X 40 PLATED	2							
20	1	26106-080802	BOLT, M8X 80 PLATED	2							

N:Old ←Yes/No→ New. Q:Old ←No/Yes→ New. R:Old ←Yes/Yes→ New. S:Old ←No/No→ New. W:Add. Z:Discontinued. F:Interchangeable by set. K:Q'ty Change

Copyright (C) YANMAR CO., LTD. All RightsReserved.

Fig.6. EXHAUST MANIFOLD

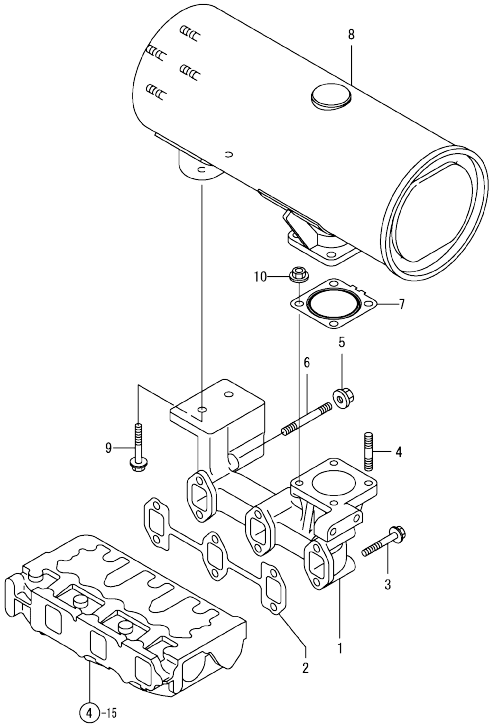

(A)=3TNV82A-GAGR (D)=
(B)= (E)=
(C)= (F)=

No.	Lev.	Parts No.	Description	Q'ty (A)	(B)	(C)	(D)	(E)	(F)	I	R
1	1	119802-13109	MANIFOLD, EXHAUST	1							
2	1	119810-13110	GASKET	1							
3	1	119802-13640	BOLT, M8X60 10.9T	4							
4	1	119131-18320	STUD, M8X22	4							
5	1	26306-080002	NUT, M8	2							
6	1	119802-13740	STUD, M8X60	2							
7	1	129004-13200	GASKET, SILENCER	1							
8	1	129004-13550	SILENCER	1							
9	1	26106-080202	BOLT, M8X 20 PLATED	2							
10	1	26306-080002	NUT, M8	4							

N:Old ◄Yes/No► New. Q:Old ◄No/Yes► New. R:Old ◄Yes/Yes► New. S:Old ◄No/No► New. W:Add. Z:Discontinued. F:Interchangeable by set. K:Q'ty Change

Copyright (C) YANMAR CO., LTD. All RightsReserved.

Fig.7. CAMSHAFT & DRIVING GEAR

(A)=3TNV82A-GAGR
(B)=
(C)=
(D)=
(E)=
(F)=

No.	Lev.	Parts No.	Description	Q'ty (A)	(B)	(C)	(D)	(E)	(F)	I	R
1	1	129150-14200	TAPPET	6							
2	1	119810-14400	ROD, PUSH	6							
3	1	26106-080142	BOLT, M8X 14 PLATED	2							
4	1	119802-25051	SHAFT, IDLE	1							
5	1	119802-25101	GEAR ASSY, IDLE	1							
8	1	119802-25071	BUSH, IDLE GEAR	1							1
9	1	26106-080402	BOLT, M8X 40 PLATED	3							
10	1	129150-25301	BOLT	4							
11	1	119802-25901	GEAR, PUMP	1							
12	1	158552-51151	FLANGE	1							
13	1	22217-140000	WASHER, SPRING 14	1							
14	1	26776-140002	NUT, LOCK M14	1							
15	1	119802-14590	CAMSHAFT ASSY	1							
16	2	22512-070140	KEY, 7X 14	1							
17	2	129150-02450	BEARING, THRUST	1							
18	2	129150-14101	GEAR, CAMSHAFT	1							

Remarks
(1)REPAIR PART.

N:Old ←Yes/No→ New. Q:Old ←No/Yes→ New. R:Old ←Yes/Yes→ New. S:Old ←No/No→ New. W:Add. Z:Discontinued. F:Interchangeable by set. K:Q'ty Change

Copyright (C) YANMAR CO., LTD. All RightsReserved.

Fig.8. CRANKSHAFT & PISTON

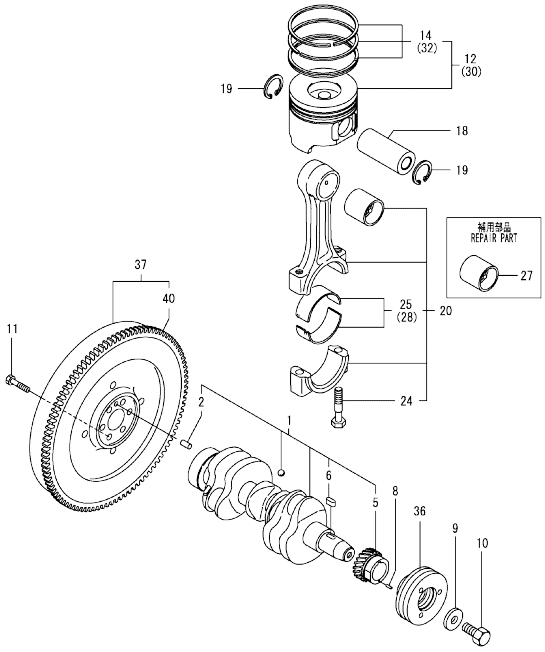

(A)=3TNV82A-GAGR (D)=
(B)= (E)=
(C)= (F)=

No.	Lev.	Parts No.	Description	Q'ty (A)	(B)	(C)	(D)	(E)	(F)	I	R
1	1	119802-21002	CRANKSHAFT ASSY	1							
2	2	129100-01580	PIN, M8X16	1							
5	2	119802-21202	GEAR, CRANKSHAFT	1							
6	2	22512-070140	KEY, 7X 14	1							
8	1	22351-030010	PIN, SPRING 3.0X10	1							
9	1	129795-21661	WASHER	1							
10	1	121850-21680	BOLT	1							
11	1	121111-21501	BOLT, FLYWHEEL	6							
12	1	119802-22080	PISTON ASSY	3							
14	2	119802-22500	RING SET, PISTON	3							
18	1	119813-22300	PIN, PISTON	3							
19	1	129792-22400	CIRCLIP, 23	6							
20	1	719810-23100	ROD ASSY, CONNECTING	3							
24	2	119810-23200	BOLT, CONNECTING ROD	6							
25	2	119810-23601	BEARING, CRANK PIN	3							
27	1	119810-23910	BEARING, PISTON PIN	3							1
28	1	119810-23611	BEARING, 0.25 US	3							2
30	1	119802-22900	PISTON ASSY, 0.25 OS	3							3
32	2	119802-22950	RING SET, 0.25 OS	3							3
36	1	119802-21660	V-PULLEY, 120	1							
37	1	171420-21590	FLYWHEEL ASSY	1							
40	2	124550-21600	GEAR, RING	1							

Remarks
(1)REPAIR PART.
(2)UNDER-SIZE(U.S=0.25)PART.
(3)OVER-SIZE(O.S=0.25)PART.

N:Old $\frac{\text{Yes}}{\text{No}}$ New. Q:Old $\frac{\text{No}}{\text{Yes}}$ New. R:Old $\frac{\text{Yes}}{\text{Yes}}$ New. S:Old $\frac{\text{No}}{\text{No}}$ New. W:Add. Z:Discontinued. F:Interchangeable by set. K:Q'ty Change

Copyright (C) YANMAR CO., LTD. All RightsReserved.

Fig.9. LUB.OIL SYSTEM

(A)=3TNV82A-GAGR
(B)=
(C)=
(D)=
(E)=
(F)=

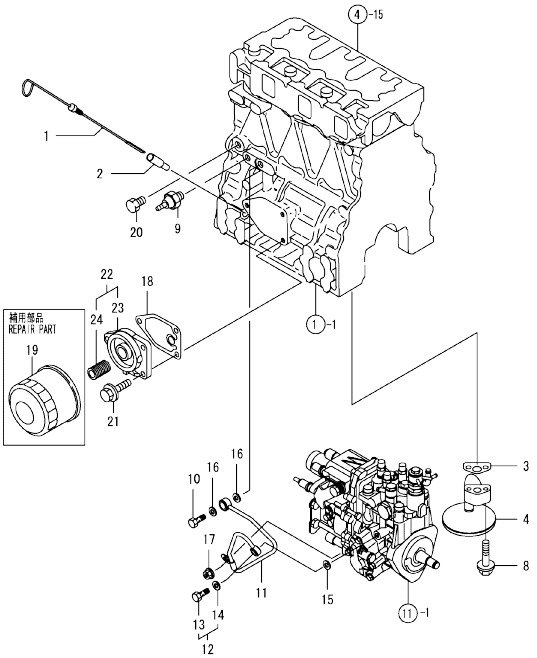

No.	Lev.	Parts No.	Description	Q'ty (A)	(B)	(C)	(D)	(E)	(F)	I	R
1	1	119802-34802	DIPSTICK, OIL	1							
2	1	121520-34810	GUIDE, DIPSTICK	1							
3	1	129150-35042	GASKET	1							
4	1	119810-35300	PIPE ASSY, OIL INLET	1							
8	1	26106-080352	BOLT, M8X 35 PLATED	2							
9	1	114250-39450	SWITCH, 0.5KG	1							
10	1	124160-39140	BOLT, PIPE JOINT M10	1							
11	1	119802-39450	PIPE ASSY, OIL	1							
12	1	129005-59830	BOLT ASSY, JOINT M8	1							
13	2	23857-030000	BOLT, JOINT 3	1							
14	2	22190-080002	WASHER, SEAL 6	1							
15	1	22190-080002	WASHER, SEAL 6	1							
16	1	22190-100002	WASHER, SEAL 10	2							
17	1	26366-060002	NUT, M6	1							
18	1	129150-35111	GASKET	1							
19	1	129150-35153	FILTER	1							1
20	1	171056-49120	PLUG, DRAIN	1							
21	1	26106-080202	BOLT, M8X 20 PLATED	3							
22	1	119802-35100	BRACKET ASSY, FILTER	1							
23	2	119802-35110	BRACKET, FILTER	1							
24	2	129100-35140	STUD	1							

Remarks
(1)REPAIR PART.

N:Old ←Yes/No→ New. Q:Old ←No/Yes→ New. R:Old ←Yes/Yes→ New. S:Old ←No/No→ New. W:Add. Z:Discontinued. F:Interchangeable by set. K:Q'ty Change

Copyright (C) YANMAR CO., LTD. All RightsReserved.

Fig.10. COOLING WATER SYSTEM

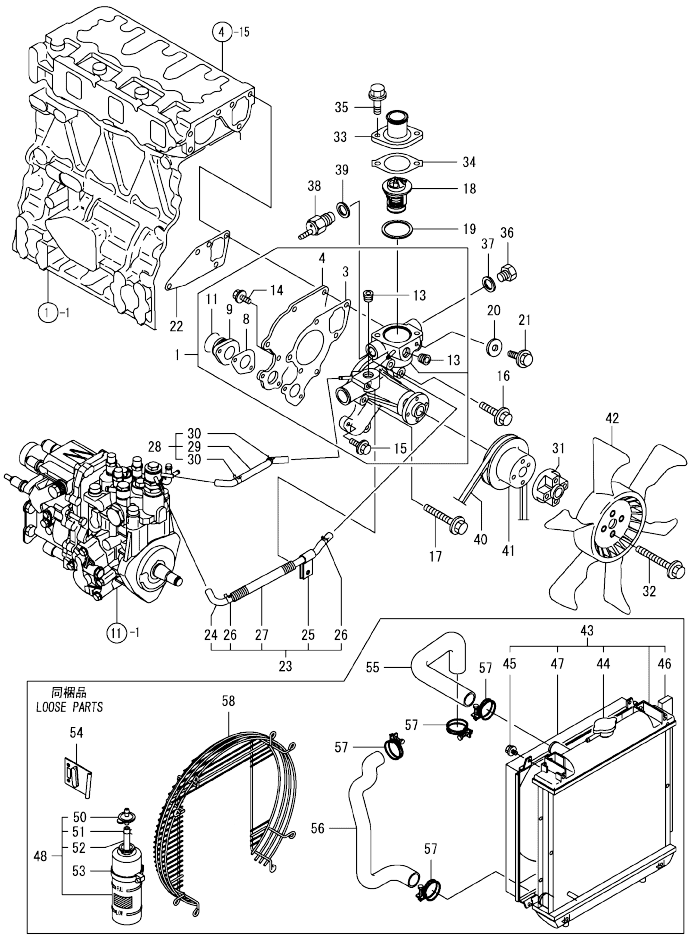

(A)=3TNV82A-GAGR (D)=
(B)= (E)=
(C)= (F)=

No.	Lev.	Parts No.	Description	Q'ty (A)	(B)	(C)	(D)	(E)	(F)	I	R
1	1	119802-42001	PUMP ASSY, WATER	1							
3	2	119810-42051	GASKET, WATER PUMP	1							
4	2	119810-42120	PLATE	1							
8	2	119810-42281	GASKET, WATER PUMP	1							
9	2	119810-42290	PIPE	1							
11	2	129054-42320	O-RING	1							
13	2	23876-030000	PLUG, R03	2							
14	2	26106-060142	BOLT, M6X 14 PLATED	2							
15	2	26106-060202	BOLT, M6X 20 PLATED	2							
16	1	26106-080352	BOLT, M8X 35 PLATED	1							
17	1	26106-080552	BOLT, M8X 55 PLATED	3							
18	1	129155-49801	THERMOSTAT, 71	1							
19	1	129150-49811	GASKET, THERMOSTAT	1							
20	1	23414-080000	GASKET, 8X1.0	1							
21	1	26106-080122	BOLT, M8X 12 PLATED	1							
22	1	129486-42050	GASKET, WATER PUMP	1							
23	1	119802-49610	PIPE ASSY, WATER	1							
24	2	119802-49711	PIPE ASSY, WATER	1							
25	2	119802-49730	RETAINER, PIPE	1							
26	2	124722-59050	CLIP, HOSE 9	2							
27	2	119802-59320	TUBE, CORRUGATED	1							
28	1	119802-49620	PIPE ASSY, WATER	1							
29	2	119802-49721	PIPE ASSY, WATER	1							
30	2	124722-59050	CLIP, HOSE 9	2							
31	1	121267-44760	SPACER	1							
32	1	26106-060302	BOLT, M6X 30 PLATED	4							
33	1	129350-49530	COVER, THERMOSTAT	1							
34	1	129795-49551	GASKET	1							
35	1	26106-080222	BOLT, M8X 22 PLATED	2							
36	1	121450-42450	PLUG, M16	1							
37	1	124465-44950	GASKET, 16	1							
38	1	121250-44901	SWITCH, 110	1							
39	1	124465-44950	GASKET, 16	1							
40	1	25132-003800	V-BELT, A38	1							
41	1	129155-42350	V-PULLEY	1							
42	1	171340-44740	FAN, COOLING D335XNF	1							
43	1	119802-44500	RADIATOR ASSY	1							
44	2	129107-44590	CAP, RADIATOR	1							
45	2	26014-060122	BOLT, M6X 12	1							
46	2	119515-44610	GASKET	1							
47	2	119802-44600	SHROUD	1							
48	1	124450-44510	TANK ASSY, SUB	1							
49	2	124450-44520	BODY, TANK	1							
50	2	124450-44530	CAP	1							
51	2	124450-44560	RETAINER	1							
52	2	23061-070230	PIPE, 7X 230	1							
53	1	124450-44550	BAND	1							
54	1	121256-44600	BRACKET, SUB TANK	1							
55	1	119960-49010	PIPE, WATER	1							
56	1	129004-49020	PIPE, WATER	1							
57	1	23010-038000	CLAMP, 38	4							

N:Old ←Yes/No→ New. Q:Old ←No/Yes→ New. R:Old ←Yes/Yes→ New. S:Old ←No/No→ New. W:Add. Z:Discontinued. F:Interchangeable by set. K:Q'ty Change

++ CONTINUE ++

Copyright (C) YANMAR CO., LTD. All RightsReserved.

Fig.10. COOLING WATER SYSTEM

(A)=3TNV82A-GAGR (D)=
(B)= (E)=
(C)= (F)=

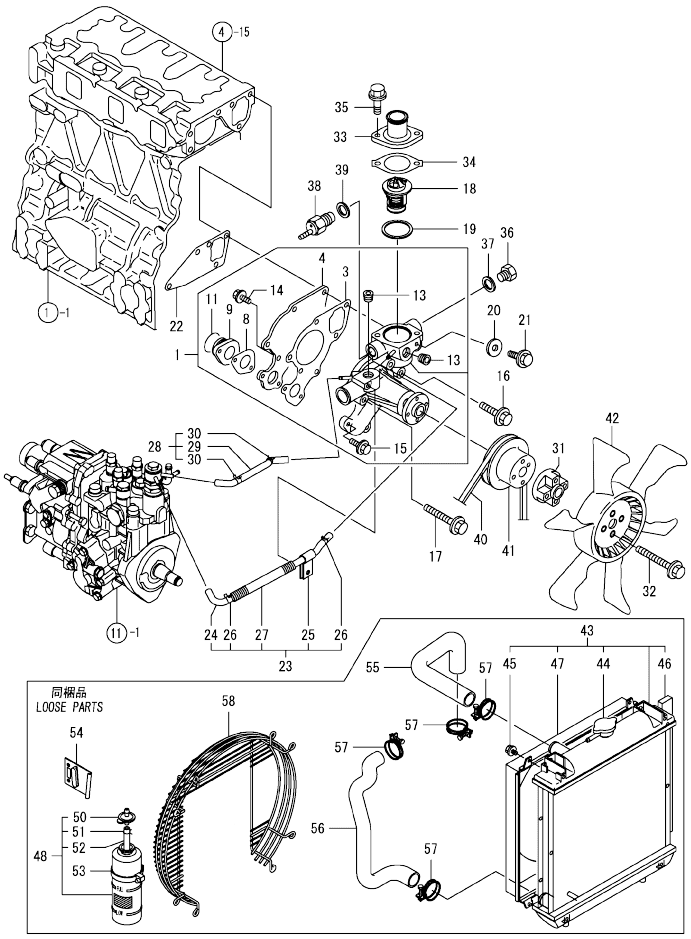

No.	Lev.	Parts No.	Description	Q'ty (A)	(B)	(C)	(D)	(E)	(F)	I	R
58	1	119802-44560	GUARD	1							

N:Old ←Yes/No→ New. Q:Old ←No/Yes→ New. R:Old ←Yes/Yes→ New. S:Old ←No/No→ New. W:Add. Z:Discontinued. F:Interchangeable by set. K:Q'ty Change

Copyright (C) YANMAR CO., LTD. All RightsReserved.

Fig.11. FUEL INJECTION PUMP

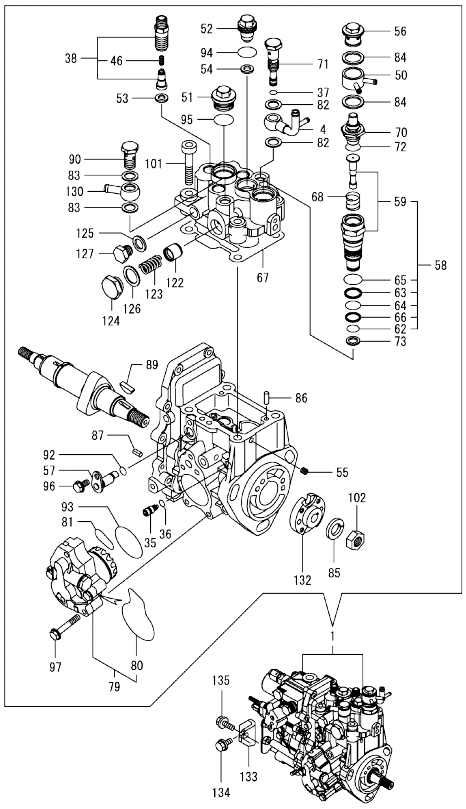

Remarks
(1)GOVERNOR ASSY(FIG.12) IS INCORPORATED IN THIS FUEL INJECTION PUMP.(REF.NO.1).

(A)=3TNV82A-GAGR (D)=
(B)= (E)=
(C)= (F)=

No.	Lev.	Parts No.	Description	Q'ty (A)	(B)	(C)	(D)	(E)	(F)	I	R
1	1	719946-51390	PUMP ASSY, INJECTION	1							1
4	2	158552-51670	JOINT, OVER FLOW	1							
35	3	158600-51270	STOPPER, TAPPET	1							
36	3	158563-51281	O-RING, 4D S6	1							
37	3	158563-51281	O-RING, 4D S6	1							
38	3	129509-51390	VALVE ASSY, DELIVERY	3							
46	4	158563-51330	SPRING, DELIVERY	3							
50	3	158553-51551	JOINT	1							
51	3	158601-51550	PLUG	1							
52	3	119802-51560	PLUG, BARREL	1							
53	3	158552-51571	GASKET	1							
54	3	158552-51571	GASKET	3							
55	3	158557-51570	PLUG	1							
56	3	158601-51570	PLUG	1							
57	3	158552-51580	LIFTER	1							
58	3	119802-51590	TIMER SET	1							
59	4	119802-51600	TIMER ASSY	1							
62	4	158553-51670	O-RING, 1011	1							
63	4	119802-51680	RING, BACK UP	1							
64	4	119802-51690	O-RING	1							
65	4	24356-010200	O-RING, 4D1020	1							
66	4	24372-000150	RING, BACK UP T2P15	1							
67	3	158552-51600	GASKET	1							
68	3	158553-51630	SPRING, TIMER	1							
70	3	158553-51640	ELEMENT	1							
71	3	158601-51650	JOINT, OVER FLOW	1							
72	3	158553-51660	O-RING, P14	1							
73	3	158553-51680	GASKET	1							
79	3	158552-52100	PUMP ASSY, FUEL FEED	1							
80	4	158552-52500	O-RING	1							
81	3	158552-52310	O-RING	1							
82	3	22190-120002	WASHER, SEAL 12	2							
83	3	22190-120002	WASHER, SEAL 12	2							
84	3	22190-180002	WASHER, SEAL 18	2							
85	3	22217-140000	WASHER, SPRING 14	1							
86	3	22312-050140	PIN, PARALLEL M5X14	2							
87	3	22351-050010	PIN, SPRING 5.0X10	2							
89	3	119802-51090	KEY, 4X16	1							
90	3	23857-060000	BOLT, JOINT 6	1							
92	3	24311-000070	O-RING, 1AP7.0	1							
93	3	158552-52400	O-RING, 4E S42	1							
94	3	24356-010180	O-RING, 4D1018	1							
95	3	24356-010200	O-RING, 4D1020	1							
96	3	26106-060102	BOLT, M6X 10 PLATED	1							
97	3	158553-51770	BOLT	4							
101	3	26450-080452	BOLT, M8X 45	4							
102	3	26776-140002	NUT, LOCK M14	1							
122	3	158601-51770	PISTON	1							
123	3	158552-51781	SPRING	1							
124	3	158601-51790	PLUG	1							
125	3	22190-120002	WASHER, SEAL 12	1							

N:Old ←Yes/No→ New. Q:Old ←No/Yes→ New. R:Old ←Yes/Yes→ New. S:Old ←No/No→ New. W:Add. Z:Discontinued. F:Interchangeable by set. K:Q'ty Change

++ CONTINUE ++

Copyright (C) YANMAR CO., LTD. All RightsReserved.

Fig.11. FUEL INJECTION PUMP

(A)=3TNV82A-GAGR
(B)=
(C)=
(D)=
(E)=
(F)=

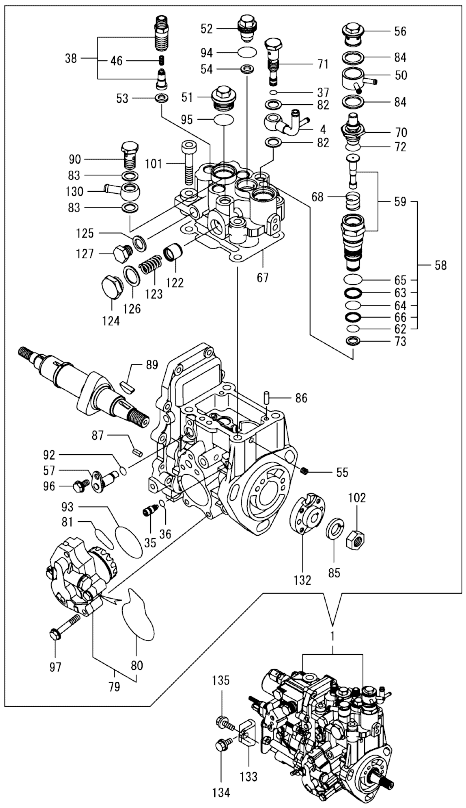

No.	Lev.	Parts No.	Description	Q'ty (A)	(B)	(C)	(D)	(E)	(F)	I	R
126	3	22190-180002	WASHER, SEAL 18	1							
127	3	23887-120002	PLUG, 12	1							
130	2	129916-59020	JOINT, PIPE 12	1							
132	2	158552-51151	FLANGE	1							
133	1	119802-51250	RETAINER, PUMP	1							
134	1	26106-080162	BOLT, M8X 16 PLATED	1							
135	1	26106-080202	BOLT, M8X 20 PLATED	1							

Remarks
(1)GOVERNOR ASSY(FIG.12) IS INCORPORATED IN THIS FUEL INJECTION PUMP.(REF.NO.1).

N:Old ←Yes/No→ New. Q:Old ←No/Yes→ New. R:Old ←Yes/Yes→ New. S:Old ←No/No→ New. W:Add. Z:Discontinued. F:Interchangeable by set. K:Q'ty Change

Copyright (C) YANMAR CO., LTD. All RightsReserved.

Fig.12. GOVERNOR

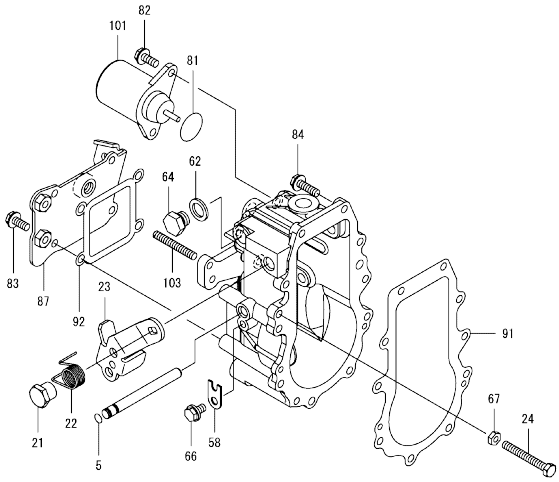

Remarks
* THIS FIGURE(GOVERNOR ASSY)IS INCORPORATED IN THE FUEL INJECTION PUMP ASSY(FIG.11).

(A)=3TNV82A-GAGR (D)=
(B)= (E)=
(C)= (F)=

No.	Lev.	Parts No.	Description	Q'ty (A)	(B)	(C)	(D)	(E)	(F)	I	R
5	4	129155-51280	O-RING, S6	1							
21	4	129255-61410	NUT, LOCK	1							
22	4	119807-61420	SPRING, RETURN	1							
23	4	129246-61441	LEVER, REGULATOR	1							
24	4	129155-61460	BOLT, IDLE	1							
58	4	119660-61901	RETAINER, SHAFT	1							
62	4	22190-120000	WASHER, SEAL 12	1							
64	4	23887-120002	PLUG, 12	1							
66	4	26106-060102	BOLT, M6X 10 PLATED	1							
67	4	26756-060002	NUT, LOCK M6	1							
81	3	158552-61900	O-RING	1							
82	3	26106-060142	BOLT, M6X 14 PLATED	2							
83	3	26106-060142	BOLT, M6X 14 PLATED	4							
84	3	26106-060202	BOLT, M6X 20 PLATED	10							
87	3	129246-61061	COVER, GOVERNOR CASE	1							
91	3	158553-61050	GASKET	1							
92	3	158553-61070	GASKET	1							
101	2	119653-77950	SOLENOID, STOP	1							
103	2	171002-66830	SCREW	1							

N:Old ←Yes/No→ New. Q:Old ←No/Yes→ New. R:Old ←Yes/Yes→ New. S:Old ←No/No→ New. W:Add. Z:Discontinued. F:Interchangeable by set. K:Q'ty Change

Copyright (C) YANMAR CO., LTD. All RightsReserved.

Fig.13. FUEL INJECTION VALVE

(A)=3TNV82A-GAGR
(B)=
(C)=
(D)=
(E)=
(F)=

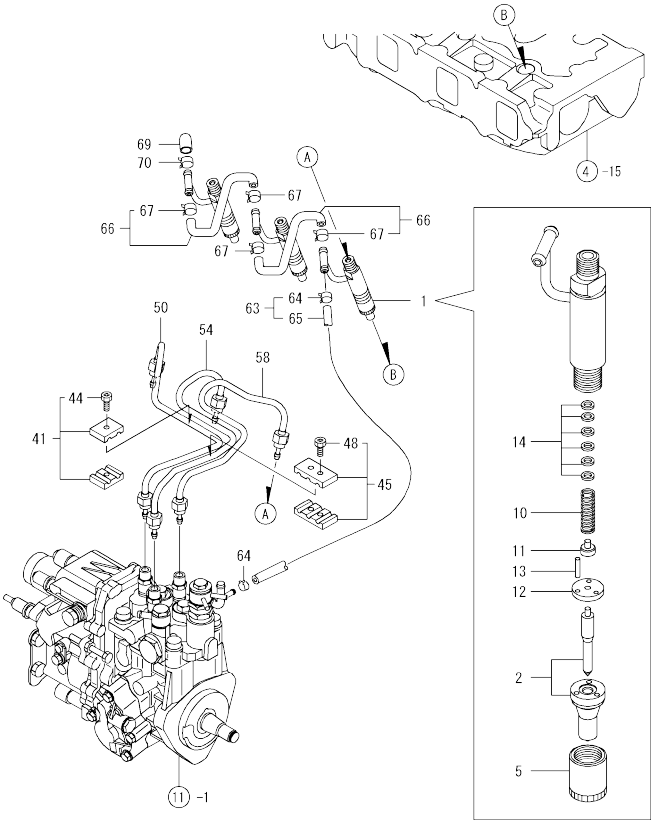

No.	Lev.	Parts No.	Description	Q'ty (A)	(B)	(C)	(D)	(E)	(F)	I	R
1	1	719946-53100	VALVE ASSY,INJECTION	3							
2	2	119946-53000	VALVE ASSY,INJECTION	3							
5	2	114250-53080	NUT, NOZZLE D16.95	3							
10	2	114250-53120	SPRING, NOZZLE	3							
11	2	114250-53130	SEAT, SPRING	3							
12	2	114250-53140	PLATE	3							
13	2	114250-53210	PIN	6							
14	2	119803-53400	SHIM SET	3							
41	1	119305-59120	RETAINER, PIPE	1							
44	2	129150-59131	BOLT, M4X14	1							
45	1	129150-59120	RETAINER, PIPE	1							
48	2	129150-59131	BOLT, M4X14	2							
50	1	119802-59810	PIPE ASSY, INJECTION	1							
54	1	119802-59820	PIPE ASSY, INJECTION	1							
58	1	119802-59830	PIPE ASSY, INJECTION	1							
63	1	119802-59550	PIPE ASSY, RETURN	1							
64	2	124722-59050	CLIP, HOSE 9	2							
65	2	119802-59560	PIPE, FUEL RETURN	1							
66	1	129486-59551	PIPE ASSY, RETURN	2							
67	2	124722-59050	CLIP, HOSE 9	4							
69	1	119593-59581	CAP	1							
70	1	124060-77680	CLIP, HOSE 10	1							

N:Old ←Yes/No→ New. Q:Old ←No/Yes→ New. R:Old ←Yes/Yes→ New. S:Old ←No/No→ New. W:Add. Z:Discontinued. F:Interchangeable by set. K:Q'ty Change

Copyright (C) YANMAR CO., LTD. All RightsReserved.

Fig.14. FUEL LINE

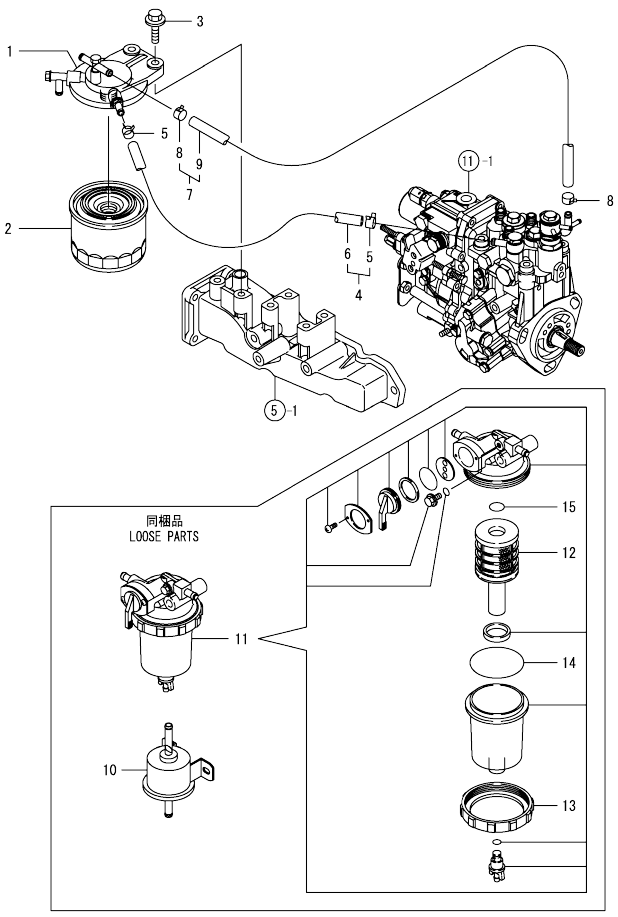

(A)=3TNV82A-GAGR (D)=
(B)= (E)=
(C)= (F)=

No.	Lev.	Parts No.	Description	Q'ty (A)	(B)	(C)	(D)	(E)	(F)	I	R
1	1	129004-55612	BRACKET, FILTER	1							
2	1	119802-55801	FILTER, FUEL	1							
3	1	26106-080302	BOLT, M8X 30 PLATED	2							
4	1	129210-59100	PIPE ASSY, FUEL	1							
5	2	124766-59050	CLIP, HOSE 12	2							
6	2	105025-59580	PIPE, FUEL	1							
7	1	129210-59230	PIPE ASSY, FUEL	1							
8	2	124766-59050	CLIP, HOSE 12	2							
9	2	129555-59511	PIPE, FUEL	1							
10	1	119225-52102	PUMP ASSY, FUEL FEED	1							
11	1	119802-55700	SEPARATOR ASSY	1							
12	2	119802-55710	ELEMENT	1							
13	2	129100-55690	RING, RETAINING	1							
14	2	24321-000650	O-RING, 1AG65.0	1							
15	2	24311-000160	O-RING, 1AP16.0	1							

N:Old ←Yes/No→ New. Q:Old ←No/Yes→ New. R:Old ←Yes/Yes→ New. S:Old ←No/No→ New. W:Add. Z:Discontinued. F:Interchangeable by set. K:Q'ty Change

Copyright (C) YANMAR CO., LTD. All RightsReserved.

Fig.15. STARTING MOTOR

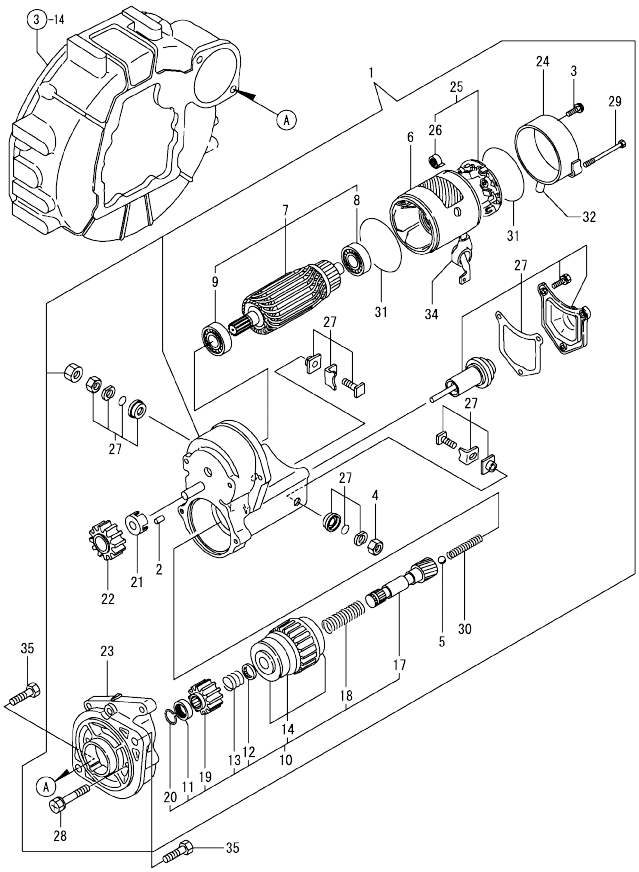

(A)=3TNV82A-GAGR (D)=
(B)= (E)=
(C)= (F)=

No.	Lev.	Parts No.	Description	Q'ty (A)	(B)	(C)	(D)	(E)	(F)	I	R
1	1	129129-77010	STARTER ASSY	1							
2	2	X0283060061	ROLLER	5							
3	2	129129-77460	SCREW	2							
4	2	X9490561370	NUT	1							
5	2	X9491200240	BALL	1							
6	2	129129-77210	YOKE ASSY	1							
7	2	129129-77220	ARMATURE ASSY	1							
8	3	129129-77230	BEARING	1							
9	3	129129-77240	BEARING	1							
10	2	129129-77250	STARTER	1							
11	3	X0280210230	NUT	1							
12	3	X0283270140	RETAINER	1							
13	3	X9491703371	SPRING, COIL	1							
14	3	129129-77390	CLUTCH ASSY, STARTER	1							
17	3	129129-77400	SHAFT	1							
18	3	129129-77410	SPRING, COIL	1							
19	3	129129-77420	PINION	1							
20	3	129129-77430	RING	1							
21	2	129129-77260	RETAINER	1							
22	2	129129-77270	PINION	1							
23	2	129129-77280	HOUSING	1							
24	2	129129-77290	FRAME	1							
25	2	129129-77300	HOLDER ASSY	1							
26	3	X9491730461	SPRING	4							
27	2	129129-77310	SWITCH ASSY	1							
28	2	129129-77320	BOLT	2							
29	2	129129-77330	BOLT	2							
30	2	129129-77340	SPRING	1							
31	2	129129-77350	O-RING	2							
32	2	129129-77362	COVER	1							
34	2	129129-77380	CAP	1							
35	1	26116-120252	BOLT, M12X 25 PLATED	2							

N:Old ←Yes/No→ New. Q:Old ←No/Yes→ New. R:Old ←Yes/Yes→ New. S:Old ←No/No→ New. W:Add. Z:Discontinued. F:Interchangeable by set. K:Q'ty Change

Copyright (C) YANMAR CO., LTD. All RightsReserved.

Fig.16. GENERATOR

(A)=3TNV82A-GAGR
(B)=
(C)=
(D)=
(E)=
(F)=

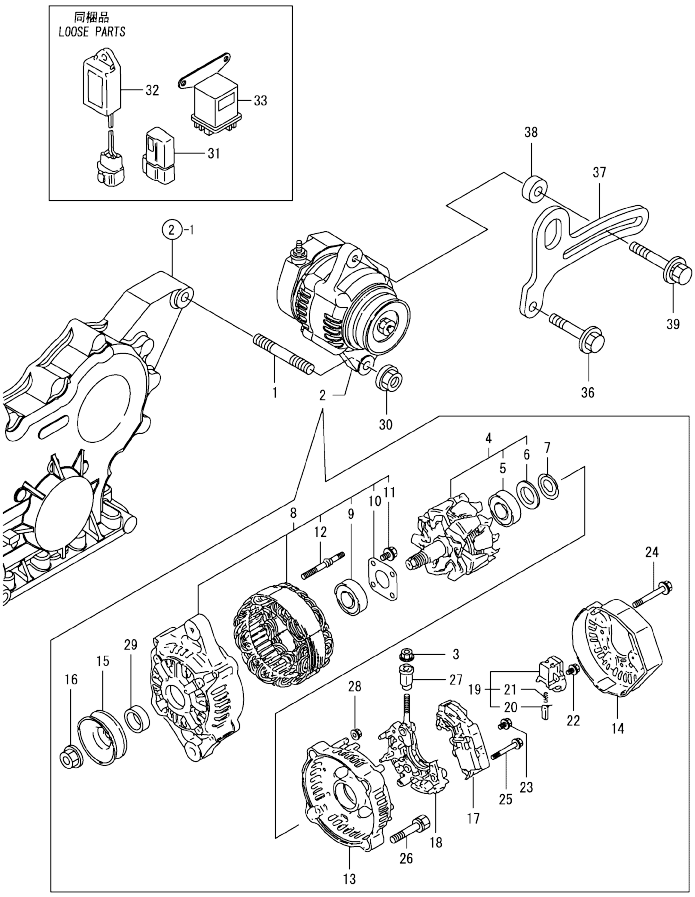

No.	Lev.	Parts No.	Description	Q'ty (A)	(B)	(C)	(D)	(E)	(F)	I	R
1	1	129795-01900	STUD	1							
2	1	129423-77200	GENERATOR, 12V-40A	1							
3	2	X9490561001	NUT	1							
4	2	119620-77380	ROTOR ASSY	1							
5	3	123501-79240	BEARING, BALL	1							
6	3	119620-79250	COVER, BEARING	1							
7	2	119620-79360	WASHER, THRUST	1							
8	2	119620-77421	FRAME ASSY, DRIVE	1							
9	3	119620-79200	BALL BEARING	1							
10	3	119620-79210	PLATE	1							
11	3	119620-79220	SCREW	4							
12	3	119620-79230	BOLT, STUD	2							
13	2	119620-77440	FLAME ASSY, REAR	1							
14	2	129240-79300	COVER	1							
15	2	119620-77461	PULLEY	1							
16	2	119620-77471	NUT	1							
17	2	129423-77710	REGULATOR ASSY	1							
18	2	119620-79260	HOLDER	1							
19	2	119620-79270	HOLDER, BRUSH	1							
20	3	119620-77480	BRUSH ASSY	2							
21	3	119620-79280	SPRING	2							
22	2	119620-79290	SCREW	6							
23	2	119620-79300	SCREW	1							
24	2	119620-79310	BOLT	3							
25	2	119620-79320	SCREW W/WASHER	2							
26	2	119620-79330	BOLT	2							
27	2	119620-79340	INSULATION BUSH	1							
28	2	119620-79350	NUT	2							
29	2	119620-77490	COLLAR	1							
30	1	26306-100002	NUT, M10	1							
31	1	119643-66900	DIODE	1							
32	1	129211-77920	TIMER	1							
33	1	119650-77910	RELAY ASSY, GLOW	1							
36	1	119940-77270	SPACER, GENERATOR	1							
37	1	119940-77320	ADJUSTER	1							
38	1	129972-77341	BOLT, ADJUSTER L=50	1							
39	1	26106-080452	BOLT, M8X 45 PLATED	1							

N:Old ←Yes/No→ New. Q:Old ←No/Yes→ New. R:Old ←Yes/Yes→ New. S:Old ←No/No→ New. W:Add. Z:Discontinued. F:Interchangeable by set. K:Q'ty Change

Copyright (C) YANMAR CO., LTD. All RightsReserved.

Fig.17. GASKET SET & TOOLS

(A)=3TNV82A-GAGR
(B)=
(C)=
(D)=
(E)=
(F)=

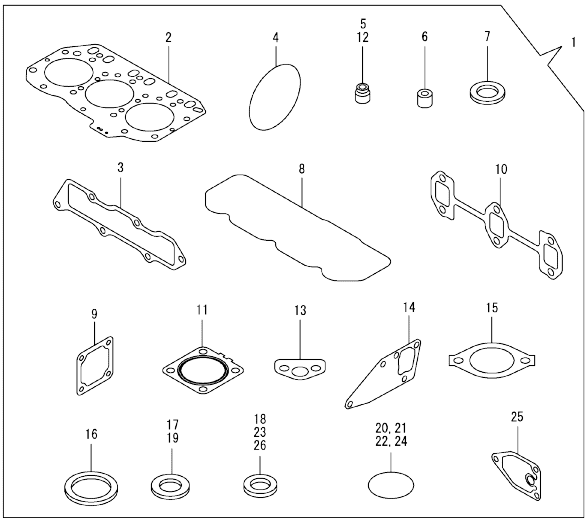

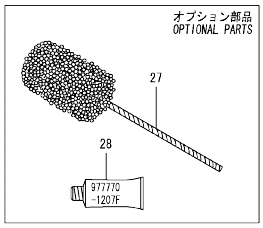

No.	Lev.	Parts No.	Description	Q'ty (A)	(B)	(C)	(D)	(E)	(F)	I	R
1	1	719946-92600	GASKET SET	1							1
2	2	119812-01330	GASKET, HEAD	1							
3	2	119813-12110	GASKET, MANIFOLD	1							
4	2	121850-51960	O-RING	1							
5	2	119803-11340	SEAL, VALVE STEM	3							
6	2	119802-11870	PROTECTOR, NOZZLE	3							
7	2	119625-11880	SEAT, NOZZLE	3							
8	2	119802-11310	GASKET, BONNET	1							
9	2	129150-77511	GASKET	1							
10	2	119810-13110	GASKET	1							
11	2	129004-13200	GASKET, SILENCER	1							
12	2	124160-11340	SEAL, VALVE STEM	3							
13	2	129150-35042	GASKET	1							
14	2	129486-42050	GASKET, WATER PUMP	1							
15	2	129795-49551	GASKET	1							
16	2	129150-49811	GASKET, THERMOSTAT	1							
17	2	23414-080000	GASKET, 8X1.0	1							
18	2	22190-080002	WASHER, SEAL 6	2							
19	2	124465-44950	GASKET, 16	2							
20	2	24311-000120	O-RING, 1AP12.0	3							
21	2	24311-000320	O-RING, 1AP32.0	2							
22	2	24341-000240	O-RING, 1AS24.0	1							
23	2	22190-100002	WASHER, SEAL 10	2							
24	2	119609-32040	O-RING, P16	4							
25	2	129150-35111	GASKET	1							
26	2	22190-220002	WASHER, SEAL 22	1							
27	1	129400-92420	FLEX HORN	1							1
28	1	977770-1207F	GASKET, LIQUID	1							1

Remarks
(1)OPTIONAL PART.

N:Old ←Yes/No→ New. Q:Old ←No/Yes→ New. R:Old ←Yes/Yes→ New. S:Old ←No/No→ New. W:Add. Z:Discontinued. F:Interchangeable by set. K:Q'ty Change

Copyright (C) YANMAR CO., LTD. All RightsReserved.

Parts No. Index

Parts No.	Fig. No.	Ref. No.
104211-11180	4	27
104211-11370	4	14
105025-59580	14	6
114250-39450	9	9
114250-53080	13	5
114250-53120	13	10
114250-53130	13	11
114250-53140	13	12
114250-53210	13	13
119131-18320	6	4
119225-52102	14	10
119305-59120	13	41
119515-44610	10	46
119593-59581	13	69
119609-32040	2	17
	17	24
119620-01750	3	16
119620-02020	1	4
119620-77380	16	4
119620-77421	16	8
119620-77440	16	13
119620-77461	16	15
119620-77471	16	16
119620-77480	16	20
119620-77490	16	29
119620-79200	16	9
119620-79210	16	10
119620-79220	16	11
119620-79230	16	12
119620-79250	16	6
119620-79260	16	18
119620-79270	16	19
119620-79280	16	21
119620-79290	16	22
119620-79300	16	23
119620-79310	16	24
119620-79320	16	25
119620-79330	16	26
119620-79340	16	27
119620-79350	16	28
119620-79360	16	7
119625-11880	4	32
	17	7
119640-01640	3	4
119643-66900	16	31
119650-77910	16	33
119653-77950	12	101
119660-61901	12	58
119802-01190	1	38
119802-01520	2	12

Parts No.	Fig. No.	Ref. No.
119802-01561	2	13
119802-03010	4	41
119802-03080	5	1
119802-03110	4	43
119802-03121	4	44
119802-03130	4	45
119802-03141	4	46
119802-11100	4	24
119802-11110	4	25
119802-11241	4	3
119802-11251	4	4
119802-11260	4	6
119802-11270	4	7
119802-11280	4	8
119802-11310	4	49
	17	8
119802-11350	4	40
119802-11650	4	10
119802-11810	4	31
119802-11870	4	55
	17	6
119802-11900	4	33
119802-12100	5	4
119802-12500	5	8
119802-12560	5	12
119802-13109	6	1
119802-13640	6	3
119802-13740	6	6
119802-14590	7	15
119802-21002	8	1
119802-21202	8	5
119802-21660	8	36
119802-22080	8	12
119802-22500	8	14
119802-22900	8	30
119802-22950	8	32
119802-25051	7	4
119802-25071	7	8
119802-25101	7	5
119802-25901	7	11
119802-32070	2	8
119802-32100	2	7
119802-32111	2	18
119802-32120	2	19
119802-32130	2	20
119802-34802	9	1
119802-35100	9	22
119802-35110	9	23
119802-39450	9	11
119802-42001	10	1

Parts No.	Fig. No.	Ref. No.
119802-44500	10	43
119802-44560	10	58
119802-44600	10	47
119802-49610	10	23
119802-49620	10	28
119802-49711	10	24
119802-49721	10	29
119802-49730	10	25
119802-51090	11	89
119802-51250	11	133
119802-51560	11	52
119802-51590	11	58
119802-51600	11	59
119802-51680	11	63
119802-51690	11	64
119802-55700	14	11
119802-55710	14	12
119802-55801	14	2
119802-59320	10	27
119802-59550	13	63
119802-59560	13	65
119802-59810	13	50
119802-59820	13	54
119802-59830	13	58
119803-11340	4	29
	17	5
119803-53400	13	14
119807-61420	12	22
119808-12540	5	10
119810-01200	1	30
119810-01730	3	1
119810-01770	3	3
119810-02871	1	32
119810-02931	1	24
119810-02941	1	35
119810-11120	4	26
119810-13110	6	2
	17	10
119810-14400	7	2
119810-23200	8	24
119810-23601	8	25
119810-23611	8	28
119810-23910	8	27
119810-35300	9	4
119810-42051	10	3
119810-42120	10	4
119810-42281	10	8
119810-42290	10	9
119812-01330	1	31
	17	2

Parts No.	Fig. No.	Ref. No.
119813-12110	5	3
	17	3
119813-22300	8	18
119866-12541	5	11
119910-12210	5	7
119934-01800	2	6
119940-77270	16	36
119940-77320	16	37
119946-11700	4	15
119946-53000	13	2
119960-49010	10	55
120270-54410	4	34
121023-01551	2	28
121111-21501	8	11
121250-44901	10	38
121256-44600	10	54
121267-44760	10	31
121450-42450	10	36
121520-34810	9	2
121850-21680	8	10
121850-51960	2	21
	17	4
123501-79240	16	5
124060-01050	1	10
124060-11800	4	30
124060-77680	13	70
124160-01751	2	14
	4	39
124160-01910	1	9
		14
124160-11340	4	28
	17	12
124160-11360	4	52
124160-39140	9	10
124240-01871	2	15
124450-44510	10	48
124450-44520	10	49
124450-44530	10	50
124450-44550	10	53
124450-44560	10	51
124465-44950	10	37
		39
	17	19
124550-21600	8	40
124722-59050	10	26
		30
	13	64
		67
124766-59050	14	5
		8

Parts No. Index

Parts No.	Fig. No.	Ref. No.
129001-01250	1	11
129001-32330	2	11
129004-12520	5	9
129004-13200	6	7
	17	11
129004-13550	6	8
129004-49020	10	56
129004-55612	14	1
129005-59830	9	12
129054-42320	10	11
129100-01580	3	9
		15
	8	2
129100-01640	3	10
129100-35140	9	24
129100-55690	14	13
129100-77501	5	15
129100-77510	5	16
129107-44590	10	44
129129-77010	15	1
129129-77210	15	6
129129-77220	15	7
129129-77230	15	8
129129-77240	15	9
129129-77250	15	10
129129-77260	15	21
129129-77270	15	22
129129-77280	15	23
129129-77290	15	24
129129-77300	15	25
129129-77310	15	27
129129-77320	15	28
129129-77330	15	29
129129-77340	15	30
129129-77350	15	31
129129-77362	15	32
129129-77380	15	34
129129-77390	15	14
129129-77400	15	17
129129-77410	15	18
129129-77420	15	19
129129-77430	15	20
129129-77460	15	3
129150-01650	3	11
129150-02450	7	17
129150-03070	4	42
129150-11230	4	11
129150-11280	4	9
129150-11750	4	13
129150-14101	7	18

Parts No.	Fig. No.	Ref. No.
129150-14200	7	1
129150-25301	7	10
129150-35042	9	3
	17	13
129150-35111	9	18
	17	25
129150-35153	9	19
129150-49811	10	19
	17	16
129150-59120	13	45
129150-59131	13	44
		48
129150-77511	5	17
	17	9
129155-42350	10	41
129155-49801	10	18
129155-51280	12	5
129155-61460	12	24
129210-59100	14	4
129210-59230	14	7
129211-77920	16	32
129240-79300	16	14
129246-61061	12	87
129246-61441	12	23
129255-61410	12	21
129350-49530	10	33
129400-92420	17	27
129410-03990	5	2
129418-32320	2	10
129423-77200	16	2
129423-77710	16	17
129486-01670	3	13
129486-42050	10	22
	17	14
129486-59551	13	66
129509-51390	11	38
129555-59511	14	9
129792-22400	8	19
129795-01780	3	12
129795-01900	16	1
129795-01950	2	16
129795-02412	1	13
129795-21661	8	9
129795-49551	10	34
	17	15
129900-07900	4	1
129900-32130	2	9
129916-59020	11	130
129972-77341	16	38
158552-51151	7	12

Parts No.	Fig. No.	Ref. No.
158552-51151	11	132
158552-51571	11	53
		54
158552-51580	11	57
158552-51600	11	67
158552-51670	11	4
158552-51781	11	123
158552-52100	11	79
158552-52310	11	81
158552-52400	11	93
158552-52500	11	80
158552-61900	12	81
158553-51551	11	50
158553-51630	11	68
158553-51640	11	70
158553-51660	11	72
158553-51670	11	62
158553-51680	11	73
158553-51770	11	97
158553-61050	12	91
158553-61070	12	92
158557-51570	11	55
158563-51281	11	36
		37
158563-51330	11	46
158600-51270	11	35
158601-51550	11	51
158601-51570	11	56
158601-51650	11	71
158601-51770	11	122
158601-51790	11	124
171002-66830	12	103
171051-01921	1	5
171056-49120	9	20
171340-44740	10	42
171340-77520	5	18
171420-01600	3	14
171420-21590	8	37
22190-080002	9	14
		15
	17	18
22190-100002	9	16
	17	23
22190-120000	12	62
22190-120002	11	82
		83
		125
22190-180002	11	84
		126
22190-220002	3	6

Parts No.	Fig. No.	Ref. No.
22190-220002	17	26
22217-140000	7	13
	11	85
22312-050140	11	86
22351-030010	8	8
22351-050010	11	87
22351-060012	4	35
22512-070140	7	16
	8	6
22857-500100	4	50
		51
23000-070000	5	13
23010-038000	10	57
23061-070230	10	52
23414-080000	10	20
	17	17
23857-030000	9	13
23857-060000	11	90
23876-030000	2	4
	10	13
23876-040000	2	5
23887-120002	11	127
	12	64
24311-000070	11	92
24311-000120	4	53
	17	20
24311-000160	14	15
24311-000320	2	23
	4	54
	17	21
24321-000650	14	14
24341-000240	2	29
	17	22
24356-010180	11	94
24356-010200	11	65
		95
24372-000150	11	66
25132-003800	10	40
26013-080222	5	14
26014-060122	10	45
26106-060102	11	96
	12	66
26106-060142	10	14
	12	82
		83
26106-060162	2	30
26106-060202	10	15
	12	84
26106-060302	10	32
26106-080122	10	21

Parts No. Index

Parts No.	Fig. No.	Ref. No.
26106-080142	7	3
26106-080162	2	24
		25
	3	7
	4	2
	11	134
26106-080202	5	5
	6	9
	9	21
	11	135
26106-080222	10	35
26106-080252	4	36
26106-080302	14	3
26106-080352	3	2
	9	8
	10	16
26106-080402	5	19
	7	9
26106-080452	3	8
	4	37
	16	39
26106-080502	4	38
26106-080552	2	26
	10	17
26106-080802	5	6
		20
26106-080852	2	22
26116-120252	15	35
26206-100252	3	17
26206-100302	3	18
26306-080002	2	27
	6	5
		10
26306-100002	16	30
26366-060002	9	17
26450-080452	11	101
26756-060002	12	67
26776-140002	7	14
	11	102
27241-120000	1	12
27241-300000	1	8
27241-400000	4	23
27310-070001	4	21
719802-01500	2	1
719802-01560	1	1
719810-02980	1	27
719810-23100	8	20
719946-51390	11	1
719946-53100	13	1
719946-92600	17	1

Parts No.	Fig. No.	Ref. No.
977770-1207F	17	28
X0280210230	15	11
X0283060061	15	2
X0283270140	15	12
X9490561001	16	3
X9490561370	15	4
X9491200240	15	5
X9491703371	15	13
X9491730461	15	26

Parts No.	Fig. No.	Ref. No.

Parts No.	Fig. No.	Ref. No.