YANMAR

PARTS CATALOG

0CV10-M94300EN

Last update Jul., 2020

PREFACE

1.This Parts Catalog carries all parts incorporated in YANMAR Model 3TNV82A-GGK engine manufactured since March, 2004.

2.Each illustration corresponds to the parts list on the following page.

3.When ordering parts,clearly write down the engine model and serial number,as well as the name and number of each part in your order sheet. This will help insure reliable delivery of the parts you have ordered.

Directions for the Parts Catalog.

1.The parts stipulated in this Parts Catalog are not necessarily standard equipped parts.
2.Parts may change without prior notice.
3.The following is an example of the Parts Catalog format.

0CF10-G21601 29. FUEL INJECTION PUMP(W/BOOST)

(A)=4JH-DT
(B)=4JH-DTZ
(C)=4JH-DTZP
(D)=4JH-DTZA
(E)=4JH-DTZY
(F)=

① REF.	② LEV.	PARTS NO.	DESCRIPTION	Q'TY (A)	(B)	(C)	(D)	(E)	(F)	③ I	⑤ R
1	1	729595-51390	FUEL INJECTION PUMP	1	1	1	1	1			1
1-1	1	729595-51391	FUEL INJECTION PUMP	1	1	1	1	1		N	1
	(A=E00185)	(B=E00200)									
3	2	26022-060162	SCREW M 6X 16	9	9	9	9	9			
3-1 ④	2	26022-060162	SCREW M 6X 16	4	4	4	4	4		K	
	(A=E00156)	(B=E00156)	(C=E00156) (D=E00156)	(E=E00156)							
4	2	129470-51040	CAMSHAFT	1	1	1	1	1			
5	2	122710-51050	BEARING, ROLLER	2	2	2	2	2			
6	2	129470-51060	RETAINER	1	1	1	1	1			

Remarks
(1) BOOST COMPEMSATOR TYPE. OPTIONAL
PART, TO E00155,(4JH-DT, 4JH-DTZ

① Ref. No.

The Ref. No. listed may not be in accordance with the illustration Ref. No.

(Ex.) Illustration No. 1 List Ref No. 1 (Before change) → 1- 1 (After change)

For interchangeable symbols N, R and K, illustrations for new parts may be abbreviated.

② Lev. (Level)

Level indication
The numbers below indicate the level of relativity towards the main part.
1 ----- Main parts (Assembly parts)
2 ----- Sub component included in " 1 ".
3 ----- Sub component included in " 2 ".
Note) Parts that are not for sale are partially illustrated but not listed.

③ Interchangeability Mark

When a part change takes place, one of the following interchangeability symbols is indicated beside the part.

Symbol	Interchangeability	Contents note
N	Old ← Yes / No → New	New Part is interchangeable for Old Part but Old Part is not interchangeable for New Part.
Q	Old ← No / Yes → New	New Part is not interchangeable for Old Part but Old Part is interchangeable for New Part.
R	Old ← Yes / Yes → New	New/ Old Parts are both interchangeable.
S	Old ← No / No → New	New/ Old Parts are both not interchangeable.
W		Part newly added.
Z		Part discontinued.
F		Not interchangeable by a single part but interchangeable together with related parts.
K		Changes only for used parts quantities.

④ Effective Machine No.

When a part changes, the effective Machine No. will be indicated in the (A)-(F) column.

Product Symbol	Product No.	Product Symbol	Product No.
C	Clutch No. Compressor No.	F	Machine No. (Agricultural Equip.)
D	Drive No.	M	Machine No.
E	Engine No.		

Note 1) A date may follow the symbol. (Ex.) 1996.01
Note 2) " XXXXX " and " ZZZZZ " are for parts that could not be predicted or for engine models that could not be identified.
Note 3) (A=E00185) is the E (Engine Serial Number) for the column (A) model (in this case 4JH-DT) after the parts design change.

⑤ Remarks Mark

Figures or alphabets (symbols) are entered in the remarks column.
The comments (remarks) on parts that are indicated at the bottom of the illustration are the same symbols as those stated above.

Contents

0CV10-M94300

Fig. No.	Fig. Name
ENGINE 3TNV82A-GGK	
1.	CYLINDER BLOCK
2.	GEAR HOUSING
3.	MOUNTING FLANGE & OIL SUMP
4.	CYLINDER HEAD & BONNET
5.	SUCTION MANIFOLD
6.	CAMSHAFT & DRIVING GEAR
7.	CRANKSHAFT & PISTON
8.	LUB.OIL SYSTEM
9.	COOLING WATER SYSTEM
10.	FUEL INJECTION PUMP
11.	FUEL INJECTION VALVE
12.	FUEL LINE
13.	STARTING MOTOR
14.	GENERATOR
15.	GASKET SET
16.	FUEL INJECTION PUMP(INNER PARTS)
17.	GOVERNOR (INNER PARTS)

Fig.1. CYLINDER BLOCK

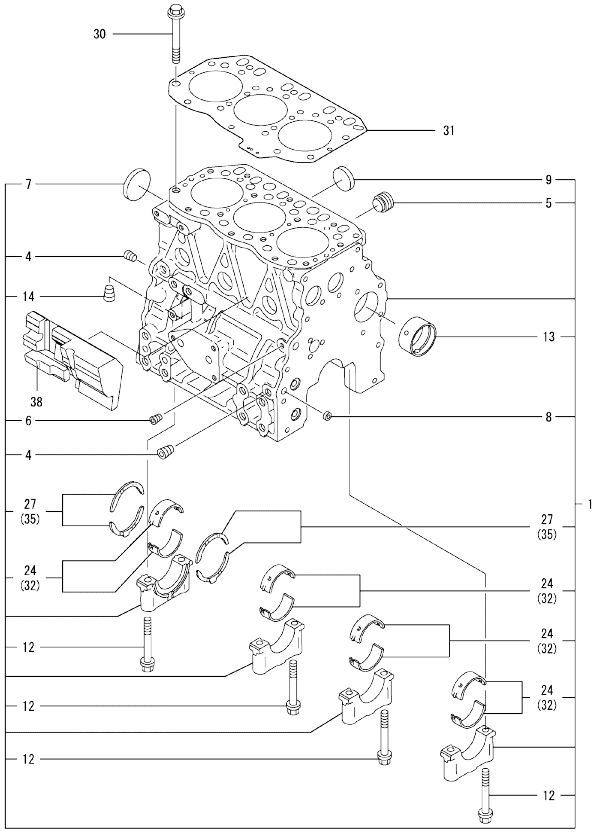

Remarks
(1) UNDER-SIZE(U.S=0.25)PART.
(2) OVER-SIZE(O.S=0.25)PART.
(3) REPAIR PART.

(A)=3TNV82A-GGK (D)=
(B)= (E)=
(C)= (F)=

No.	Lev.	Parts No.	Description	Q'ty (A)	(B)	(C)	(D)	(E)	(F)	I	R
1	1	719802-01560	BLOCK ASSY, CYLINDER	1							
4	2	124160-01910	PLUG, PT1/4	2							
5	2	171051-01921	PLUG, NPTF1	1							
6	2	124060-01050	PLUG, PT1/8	1							
7	2	129001-01250	PLUG, 50	1							
8	2	27241-120000	PLUG, 12	2							
9	2	27241-300000	PLUG 30	6							
12	2	119620-02020	BOLT, METAL CAP	8							
13	2	129795-02411	BUSH, CAMSHAFT	1							
14	2	124160-01910	PLUG, PT1/4	1							
24	2	719810-02980	BEARING, MAIN	4							3
27	2	119810-02930	BEARING, THRUST	1							
30	1	119810-01200	BOLT, HEAD	14							
31	1	119812-01330	GASKET, HEAD	1							
32	1	119810-02870	BEARING, 0.25 US	4							1
35	1	119810-02940	BEARING, THRUST 0.25	2							2
38	1	119802-01190	SPACER	1							

N:Old ←Yes/No→ New. Q:Old ←No/Yes→ New, R:Old ←Yes/Yes→ New, S:Old ←No/No→ New, W:Add, Z:Discontinued, F:Interchangeable by set, K:Q'ty Change

Copyright (C) YANMAR GLOBAL CS CO., LTD. All RightsReserved.

Fig.2. GEAR HOUSING

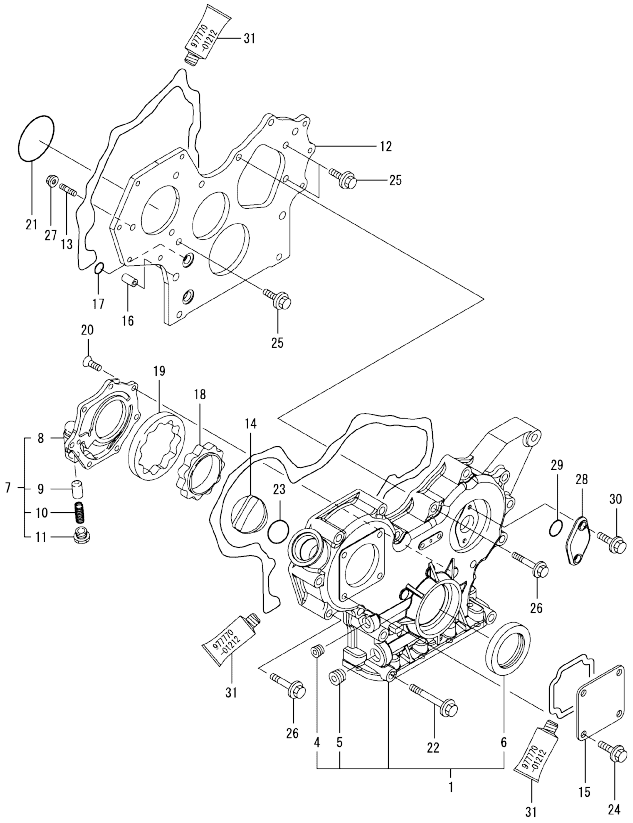

(A)=3TNV82A-GGK (D)=
(B)= (E)=
(C)= (F)=

No.	Lev.	Parts No.	Description	Q'ty (A)	(B)	(C)	(D)	(E)	(F)	I	R
1	1	719802-01500	CASE ASSY, GEAR	1							
4	2	23876-030000	PLUG, R03	1							
5	2	23876-040000	PLUG, R04	1							
6	2	129795-01800	SEAL, OIL	1							
7	1	119802-32100	COVER ASSY	1							
8	2	119802-32070	COVER	1							
9	2	129900-32130	VALVE, RELIEF	1							
10	2	129418-32320	SPRING	1							
11	2	129001-32330	PLUG	1							
12	1	119802-01520	FLANGE, GEAR CASE	1							
13	1	119802-01560	STUD, M8X25	3							
14	1	124160-01751	COVER, FILLER	1							
15	1	124240-01871	COVER	1							
16	1	129795-01950	PIPE, KNOCK L=18	2							
17	1	119609-32040	O-RING, P16	4							
18	1	119802-32111	ROTOR, INNER	1							
19	1	119802-32120	ROTOR, OUTER	1							
20	1	119802-32130	SCREW, M6X16	7							
21	1	121850-51960	O-RING	1							
22	1	129001-91841	BOLT, M8X85	3							
23	1	24311-000320	O-RING, 1AP32.0	1							
24	1	26106-080162	BOLT, M8X 16 PLATED	4							
25	1	26106-080162	BOLT, M8X 16 PLATED	3							
26	1	26106-080552	BOLT, M8X 55 PLATED	12							
27	1	26306-080002	NUT, M8	3							
28	1	121023-01550	COVER	1							
29	1	24341-000240	O-RING, 1AS24.0	1							
30	1	26106-060162	BOLT, M6X 16 PLATED	2							
31	1	977770-01212	GASKET, LIQUID	1							1

Remarks
(1) OPTIONAL PART.

N:Old $\xleftarrow[\text{No}]{\text{Yes}}$ New. Q:Old $\xleftarrow[\text{Yes}]{\text{No}}$ New. R:Old $\xleftarrow[\text{Yes}]{\text{Yes}}$ New. S:Old $\xleftarrow[\text{No}]{\text{No}}$ New. W:Add. Z:Discontinued. F:Interchangeable by set. K:Q'ty Change

Copyright (C) YANMAR GLOBAL CS CO., LTD. All RightsReserved.

Fig.3. MOUNTING FLANGE & OIL SUMP

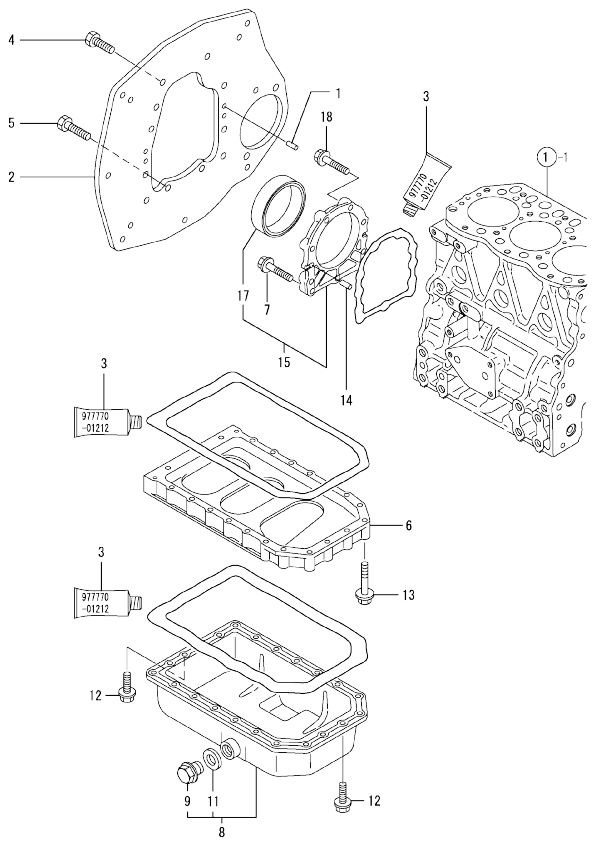

Remarks
(1) OPTIONAL PART.

(A)=3TNV82A-GGK (D)=
(B)= (E)=
(C)= (F)=

No.	Lev.	Parts No.	Description	Q'ty (A)	(B)	(C)	(D)	(E)	(F)	I	R
1	1	129100-01580	PIN, M8X16	2							
2	1	129176-01601	FLANGE, MOUNTING	1							
3	1	977770-01212	GASKET, LIQUID	1							1
4	1	26206-100202	BOLT, M10X 20 PLATED	6							
5	1	26206-100252	BOLT, M10X 25 PLATED	4							
6	1	119810-01730	SPACER, OIL SUMP	1							
7	1	26106-080352	BOLT, M8X 35 PLATED	3							
8	1	119843-01780	SUMP ASSY, OIL	1							
9	2	119640-01640	PLUG, DRAIN M22	1							
11	2	22190-220002	WASHER, SEAL 22	1							
12	1	26106-080162	BOLT, M8X 16 PLATED	6							
13	1	26106-080452	BOLT, M8X 45 PLATED	22							
14	1	129100-01580	PIN, M8X16	2							
15	1	129100-01640	CASE ASSY, OIL SEAL	1							
17	2	129795-01780	SEAL, OIL	1							
18	1	129486-01670	BOLT, M8X30	6							

N:Old ←Yes/No→ New. Q:Old ←No/Yes→ New. R:Old ←Yes/Yes→ New. S:Old ←No/No→ New. W:Add. Z:Discontinued. F:Interchangeable by set. K:Q'ty Change

Copyright (C) YANMAR GLOBAL CS CO., LTD. All RightsReserved.

Fig.4. CYLINDER HEAD & BONNET

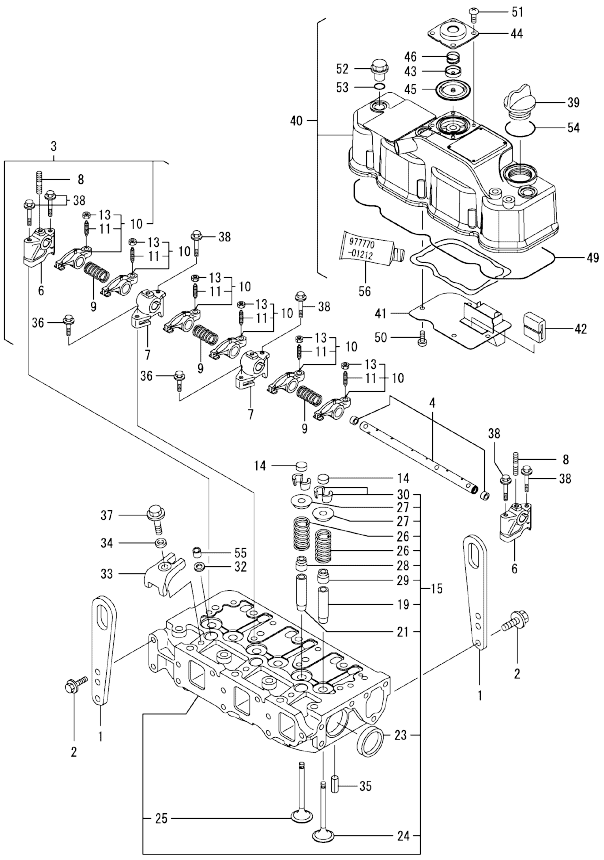

				(A)=3TNV82A-GGK			(D)=				
				(B)=			(E)=				
				(C)=			(F)=				
No.	Lev.	Parts No.	Description	Q'ty (A)	(B)	(C)	(D)	(E)	(F)	I	R
1	1	129900-07900	LIFTER	2							
2	1	26106-080142	BOLT, M8X 14 PLATED	4							
3	1	119802-11241	SHAFT ASSY, ROCKER	1							
4	2	119802-11251	SHAFT, ROCKER ARM	1							
6	2	119802-11260	SUPPORT, ROCKER ARM	2							
7	2	119802-11270	SUPPORT, ROCKER ARM	2							
8	2	119802-11280	STUD	3							
9	2	129150-11280	SPRING	3							
10	2	119802-11650	ARM, ROCKER	6							
11	3	129150-11230	SCREW, VALVE ADJUST	6							
13	3	129150-11750	NUT, M8	6							
14	1	104211-11370	CAP, VALVE	6							
15	1	119802-11700	HEAD ASSY, CYLINDER	1							
19	2	124060-11800	GUIDE, VALVE	3							1
21	2	119802-11810	GUIDE, VALVE	3							1
23	2	27241-400000	PLUG, 40	2							
24	2	119802-11100	VALVE, INTAKE	3							
25	2	119802-11110	VALVE, EXHAUST	3							
26	2	119810-11120	SPRING, VALVE	6							
27	2	104211-11180	RETAINER, SPRING	6							
28	2	124160-11340	SEAL, VALVE STEM	3							
29	2	124950-11340	SEAL, VALVE STEM	3							
30	2	27310-070001	COTTER, 7	6							
32	1	119625-11880	SEAT, NOZZLE	3							
33	1	119802-11900	RETAINER, NOZZLE	3							
34	1	120270-54410	WASHER, INJECTOR	3							
35	1	22351-060012	PIN, SPRING 6.0X12	2							
36	1	26106-080252	BOLT, M8X 25 PLATED	2							
37	1	26106-080452	BOLT, M8X 45 PLATED	3							
38	1	26106-080502	BOLT, M8X 50 PLATED	6							
39	1	124160-01751	COVER, FILLER	1							
40	1	119802-11350	BONNET ASSY, HEAD	1							
41	2	119802-03010	PLATE	1							
42	2	129150-03070	BAFFLE, BREATHER	1							
43	2	119802-03110	PLATE	1							
44	2	119802-03120	COVER, DIAPHRAGM	1							
45	2	119802-03130	DIAPHRAGM	1							
46	2	119802-03140	SPRING, DIAPHRAGM	1							
49	2	119802-11310	GASKET, BONNET	1							
50	2	22857-500100	SCREW, 5X10	4							
51	2	22857-500100	SCREW, 5X10	4							
52	1	124160-11360	KNOB	3							
53	1	24311-000120	O-RING, 1AP12.0	3							
54	1	24311-000320	O-RING, 1AP32.0	1							
55	1	119802-11870	PROTECTOR, NOZZLE	3							
56	1	977770-01212	GASKET, LIQUID	1							2

Remarks
(1) REPAIR PART.
(2) OPTIONAL PART.

N:Old ←Yes/No→ New. Q:Old ←No/Yes→ New. R:Old ←Yes/Yes→ New. S:Old ←No/No→ New. W:Add. Z:Discontinued. F:Interchangeable by set. K:Q'ty Change

Copyright (C) YANMAR GLOBAL CS CO., LTD. All RightsReserved.

Fig.5. SUCTION MANIFOLD

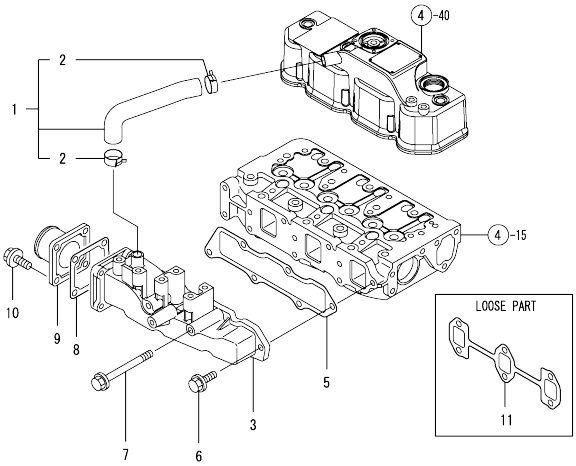

(A)=3TNV82A-GGK
(B)=
(C)=
(D)=
(E)=
(F)=

No.	Lev.	Parts No.	Description	Q'ty (A)	(B)	(C)	(D)	(E)	(F)	I	R
1	1	119802-03080	PIPE , BREATHER	1							
2	2	129410-03990	CLAMP 22	2							
3	1	119802-12100	MANIFOLD, AIR INTAKE	1							
5	1	119813-12110	GASKET, MANIFOLD	1							
6	1	26106-080202	BOLT, M8X 20 PLATED	4							
7	1	26106-080802	BOLT, M8X 80 PLATED	2							
8	1	129150-77511	GASKET	1							
9	1	129486-12581	JOINT, MANIFOLD	1							
10	1	26106-080202	BOLT, M8X 20 PLATED	4							
11	1	119810-13110	GASKET	1							

N:Old ←Yes/No→ New. Q:Old ←No/Yes→ New. R:Old ←Yes/Yes→ New. S:Old ←No/No→ New. W:Add. Z:Discontinued. F:Interchangeable by set. K:Q'ty Change

Copyright (C) YANMAR GLOBAL CS CO., LTD. All RightsReserved.

Fig.6. CAMSHAFT & DRIVING GEAR

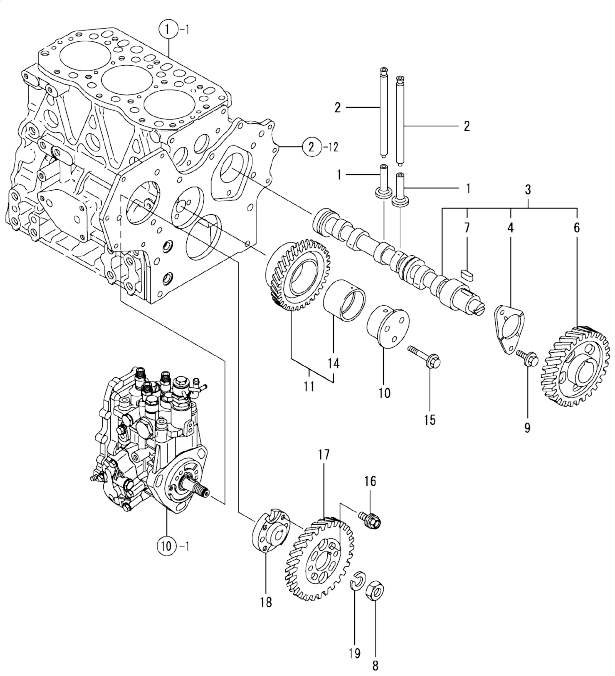

(A)=3TNV82A-GGK
(B)=
(C)=
(D)=
(E)=
(F)=

No.	Lev.	Parts No.	Description	Q'ty (A)	(B)	(C)	(D)	(E)	(F)	I	R
1	1	129150-14200	TAPPET	6							
2	1	119810-14400	ROD, PUSH	6							
3	1	119802-14590	CAMSHAFT ASSY	1							
4	2	129150-02450	BEARING, THRUST	1							
6	2	129150-14101	GEAR, CAMSHAFT	1							
7	2	22512-070140	KEY, 7X 14	1							
8	1	26776-140002	NUT, LOCK M14	1							
9	1	26106-080142	BOLT, M8X 14 PLATED	2							
10	1	119802-25051	SHAFT, IDLE	1							
11	1	119802-25100	GEAR ASSY, IDLE	1							
14	2	119802-25070	BUSH, IDLE GEAR	1							1
15	1	26106-080402	BOLT, M8X 40 PLATED	3							
16	1	129150-25301	BOLT	4							
17	1	119802-25901	GEAR, PUMP	1							
18	1	158552-51151	FLANGE	1							
19	1	22217-140000	WASHER, SPRING 14	1							

Remarks
(1) REPAIR PART.

N:Old ◄Yes/No► New. Q:Old ◄No/Yes► New. R:Old ◄Yes/Yes► New. S:Old ◄No/No► New. W:Add. Z:Discontinued. F:Interchangeable by set. K:Q'ty Change

Copyright (C) YANMAR GLOBAL CS CO., LTD. All RightsReserved.

Fig.7. CRANKSHAFT & PISTON

(A)=3TNV82A-GGK
(B)=
(C)=
(D)=
(E)=
(F)=

No.	Lev.	Parts No.	Description	Q'ty (A)	(B)	(C)	(D)	(E)	(F)	I	R
1	1	119802-21001	CRANKSHAFT ASSY	1							
2	2	129100-01580	PIN, M8X16	1							
5	2	119802-21201	GEAR, CRANKSHAFT	1							
6	2	22512-070140	KEY, 7X 14	1							
8	1	22351-030010	PIN, SPRING 3.0X10	1							
9	1	119802-21660	V-PULLEY, 120	1							
10	1	129795-21661	WASHER	1							
11	1	121850-21680	BOLT	1							
12	1	121111-21501	BOLT, FLYWHEEL	6							
13	1	129489-21570	FLYWHEEL ASSY	1							
15	2	124550-21600	GEAR, RING	1							
16	1	119802-22080	PISTON ASSY	3							
18	2	119802-22500	RING SET, PISTON	3							
22	1	119813-22300	PIN, PISTON	3							
23	1	129792-22400	CIRCLIP, 23	6							
24	1	719810-23100	ROD ASSY, CONNECTING	3							
28	2	119810-23910	BEARING, PISTON PIN	3							1
29	2	119810-23200	BOLT, CONNECTING ROD	6							
30	2	119810-23600	BEARING, CRANK PIN	3							
32	1	119810-23610	BEARING, 0.25 US	3							2
34	1	719802-22900	PISTON ASSY, 0.25 OS	3							3
36	2	719802-22950	RING SET, 0.25 OS	3							3

Remarks
(1) REPAIR PART.
(2) UNDER-SIZE(U.S=0.25)PART.
(3) OVER-SIZE(O.S=0.25)PART.

N:Old ←Yes/No→ New. Q:Old ←No/Yes→ New. R:Old ←Yes/Yes→ New. S:Old ←No/No→ New. W:Add. Z:Discontinued. F:Interchangeable by set. K:Q'ty Change

Copyright (C) YANMAR GLOBAL CS CO., LTD. All RightsReserved.

Fig.8. LUB.OIL SYSTEM

(A)=3TNV82A-GGK
(B)=
(C)=
(D)=
(E)=
(F)=

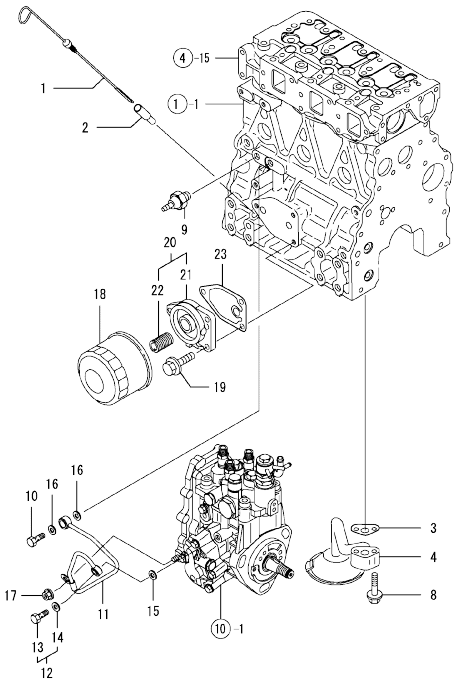

No.	Lev.	Parts No.	Description	Q'ty (A)	(B)	(C)	(D)	(E)	(F)	I	R
1	1	119802-34811	DIPSTICK, OIL	1							
2	1	121520-34810	GUIDE, DIPSTICK	1							
3	1	129150-35041	GASKET	1							
4	1	119810-35401	PIPE ASSY, OIL INLET	1							
8	1	26106-080352	BOLT, M8X 35 PLATED	2							
9	1	114250-39450	SWITCH, 0.5KG	1							
10	1	124160-39140	BOLT, PIPE JOINT M10	1							
11	1	119802-39450	PIPE ASSY, OIL	1							
12	1	129005-59830	BOLT ASSY, JOINT M8	1							
13	2	23857-030000	BOLT, JOINT 3	1							
14	2	22190-080002	WASHER, SEAL 6	1							
15	1	22190-080002	WASHER, SEAL 6	1							
16	1	22190-100002	WASHER, SEAL 10	2							
17	1	26366-060002	NUT, M6	1							
18	1	129150-35170	FILTER,LO	1							1
19	1	26106-080202	BOLT, M8X 20 PLATED	3							
20	1	119802-35100	BRACKET ASSY, FILTER	1							
21	2	119802-35110	BRACKET, FILTER	1							
22	2	129100-35140	STUD	1							
23	1	129150-35111	GASKET	1							

Remarks
(1) REPAIR PART.

N:Old ←Yes/No→ New. Q:Old ←No/Yes→ New. R:Old ←Yes/Yes→ New. S:Old ←No/No→ New. W:Add. Z:Discontinued. F:Interchangeable by set. K:Q'ty Change

Copyright (C) YANMAR GLOBAL CS CO., LTD. All RightsReserved.

Fig.9. COOLING WATER SYSTEM

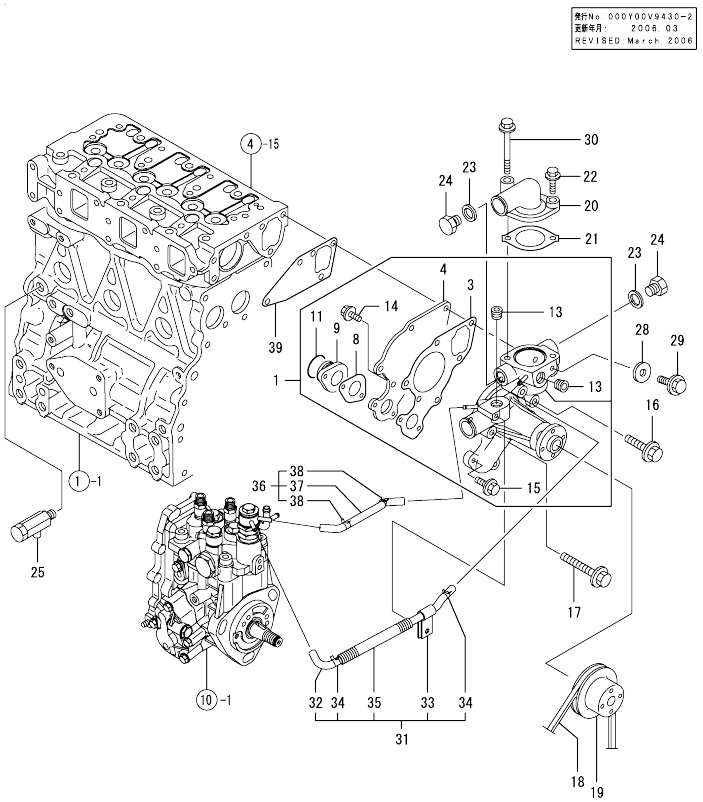

(A)=3TNV82A-GGK (D)=
(B)= (E)=
(C)= (F)=

No.	Lev.	Parts No.	Description	Q'ty (A)	(B)	(C)	(D)	(E)	(F)	I	R
1	1	119802-42000	PUMP ASSY, WATER	1							
3	2	119810-42051	GASKET, WATER PUMP	1							
4	2	119810-42120	PLATE, PUMP	1							
8	2	119810-42281	GASKET, WATER PUMP	1							
9	2	119810-42290	PIPE, PUMP	1							
11	2	129150-42320	O-RING	1							
13	2	23876-030000	PLUG, R03	2							
14	2	26106-060142	BOLT, M6X 14 PLATED	2							
15	2	26106-060202	BOLT, M6X 20 PLATED	2							
16	1	26106-080352	BOLT, M8X 35 PLATED	1							
17	1	26106-080552	BOLT, M8X 55 PLATED	3							
18	1	25132-003800	V-BELT, A38	1							Z
	(A=*2004.05)										
19	1	129155-42350	V-PULLEY, PUMP	1							
20	1	124101-49530	COVER, THERMOSTAT	1							
21	1	129795-49551	GASKET, COVER	1							
22	1	26106-080252	BOLT, M8X 25 PLATED	1							
23	1	124465-44950	GASKET, 16	2							
24	1	121450-42450	PLUG, M16	2							
25	1	119620-49290	COCK ASSY, 1/4	1							
28	1	23414-080000	GASKET, 8X1.0	1							
29	1	26106-080122	BOLT, M8X 12 PLATED	1							
30	1	26106-080602	BOLT, M8X 60 PLATED	1							
31	1	119802-49610	HOSE ASSY, WATER A	1							
32	2	119802-49711	HOSE ASSY, WATER A	1							
33	2	119802-49730	RETAINER, PIPE	1							
34	2	124722-59050	CLAMP, HOSE 9	2							
35	2	119802-59320	TUBE, CORRUGATED 10	1							
36	1	119802-49620	HOSE ASSY, WATER B	1							
37	2	119802-49721	HOSE ASSY, WATER B	1							
38	2	124722-59050	CLAMP, HOSE 9	2							
39	1	129486-42050	GASKET, WATER PUMP	1							

N:Old ←Yes/No→ New. Q:Old ←No/Yes→ New. R:Old ←Yes/Yes→ New. S:Old ←No/No→ New. W:Add. Z:Discontinued. F:Interchangeable by set. K:Q'ty Change

Copyright (C) YANMAR GLOBAL CS CO., LTD. All RightsReserved.

Fig.10. FUEL INJECTION PUMP

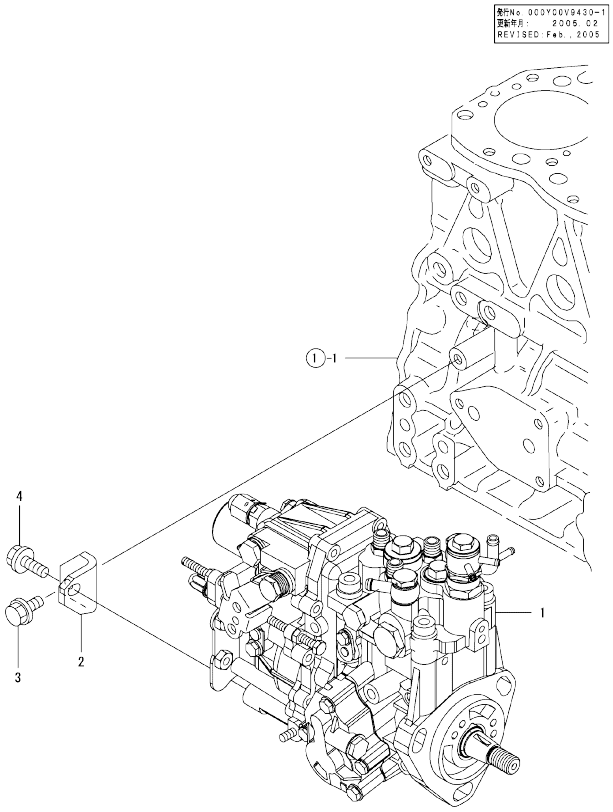

(A)=3TNV82A-GGK
(B)=
(C)=
(D)=
(E)=
(F)=

No.	Lev.	Parts No.	Description	Q'ty (A)	(B)	(C)	(D)	(E)	(F)	I	R
1	1	719946-51390	PUMP ASSY, INJECTION	1							1
2	1	119802-51250	RETAINER, PUMP	1							
3	1	26106-080162	BOLT, M8X 16 PLATED	1							
4	1	26106-080202	BOLT, M8X 20 PLATED	1							

Remarks
(1) REFER TO FI.16 & 17 FOR INNER PARTS.

N:Old ←Yes/No→ New. Q:Old ←No/Yes→ New. R:Old ←Yes/Yes→ New. S:Old ←No/No→ New. W:Add. Z:Discontinued. F:Interchangeable by set. K:Q'ty Change

Copyright (C) YANMAR GLOBAL CS CO., LTD. All RightsReserved.

Fig.11. FUEL INJECTION VALVE

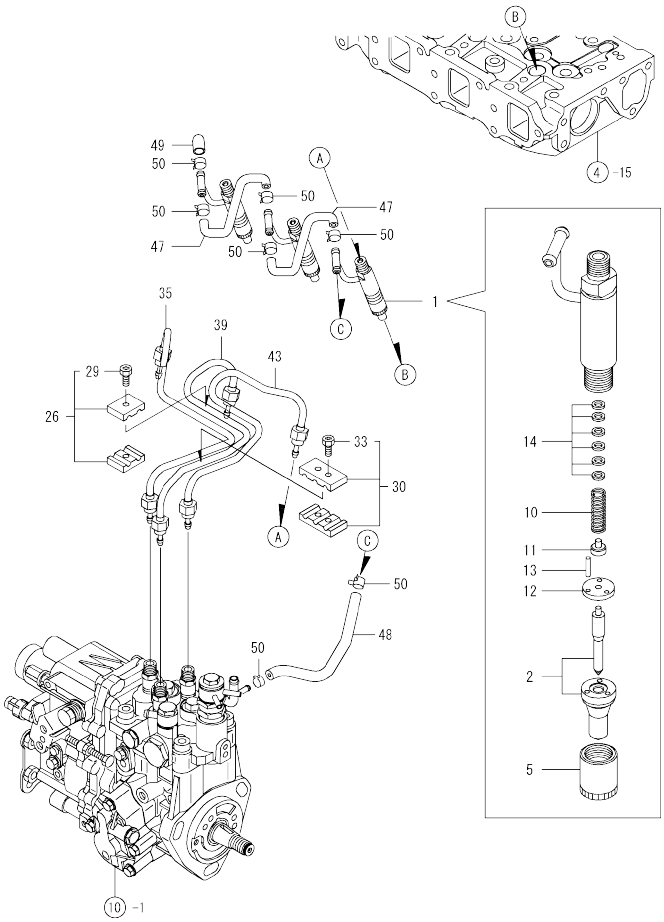

(A)=3TNV82A-GGK (D)=
(B)= (E)=
(C)= (F)=

No.	Lev.	Parts No.	Description	Q'ty (A)	(B)	(C)	(D)	(E)	(F)	I	R
1	1	719946-53100	VALVE ASSY,INJECTION	3							
2	2	119946-53000	VALVE ASSY,INJECTION	3							
5	2	114250-53080	NUT, NOZZLE D16.95	3							
10	2	114250-53120	SPRING, NOZZLE	3							
11	2	114250-53130	SEAT, SPRING	3							
12	2	114250-53140	PLATE	3							
13	2	114250-53210	PIN	6							
14	2	114250-53400	SHIM SET	3							
26	1	119305-59120	RETAINER, PIPE	1							
29	2	129150-59131	BOLT, M4X14	1							
30	1	129150-59120	RETAINER, PIPE	1							
33	2	129150-59131	BOLT, M4X14	2							
35	1	119802-59810	PIPE ASSY, INJECTION	1							
39	1	119802-59820	PIPE ASSY, INJECTION	1							
43	1	119802-59830	PIPE ASSY, INJECTION	1							
47	1	129270-59550	PIPE, FUEL	2							
48	1	119802-59570	PIPE, FUEL	1							
49	1	129270-59580	CAP	1							
50	1	23000-013000	CLAMP, 13	7							

N:Old ←Yes/No→ New. Q:Old ←No/Yes→ New, R:Old ←Yes/Yes→ New. S:Old ←No/No→ New. W:Add. Z:Discontinued. F:Interchangeable by set. K:Q'ty Change

Copyright (C) YANMAR GLOBAL CS CO., LTD. All RightsReserved.

Fig.12. FUEL LINE

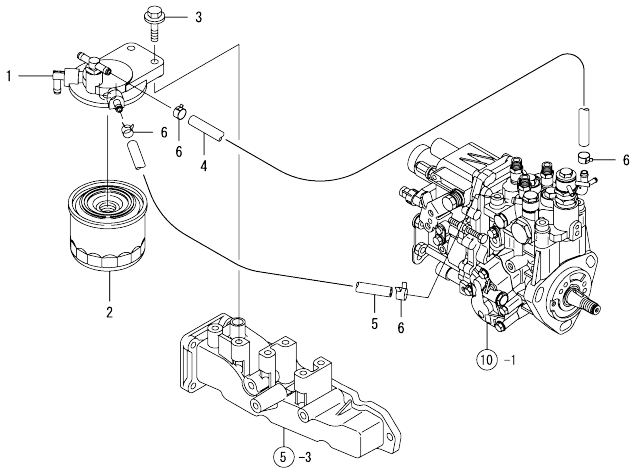

(A)=3TNV82A-GGK (D)=
(B)= (E)=
(C)= (F)=

No.	Lev.	Parts No.	Description	Q'ty (A)	(B)	(C)	(D)	(E)	(F)	I	R
1	1	129004-55610	BRACKET, FILTER	1							
2	1	119802-55800	FILTER, FUEL	1							
3	1	26106-080302	BOLT, M8X 30 PLATED	2							
4	1	119802-59100	PIPE, FUEL	1							
5	1	119802-59110	PIPE, FUEL	1							
6	1	23000-016000	CLAMP, 16	4							

N:Old ←Yes/No→ New. Q:Old ←No/Yes→ New. R:Old ←Yes/Yes→ New. S:Old ←No/No→ New. W:Add. Z:Discontinued. F:Interchangeable by set. K:Q'ty Change

Copyright (C) YANMAR GLOBAL CS CO., LTD. All RightsReserved.

Fig.13. STARTING MOTOR

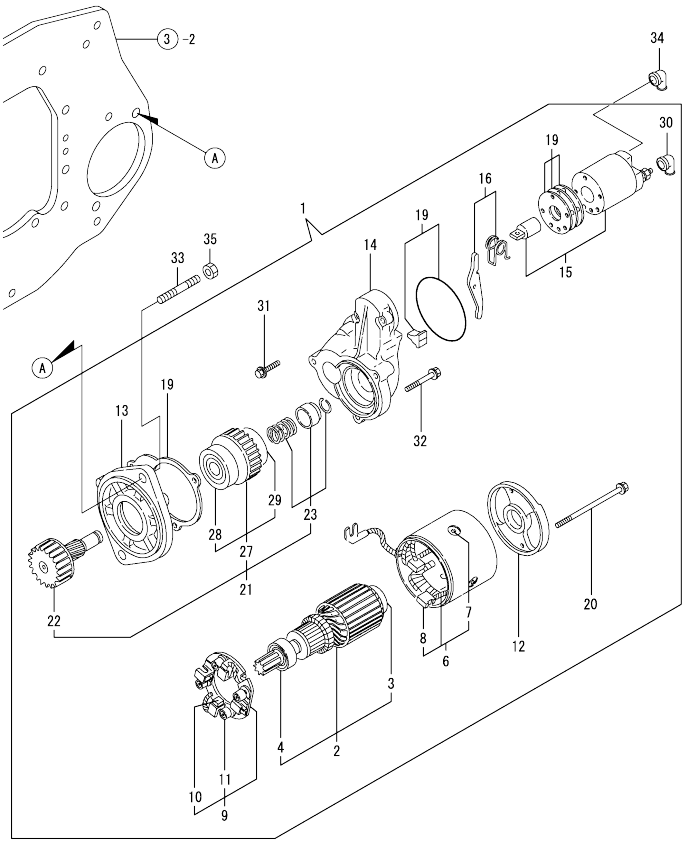

(A)=3TNV82A-GGK (D)=
(B)= (E)=
(C)= (F)=

No.	Lev.	Parts No.	Description	Q'ty (A)	(B)	(C)	(D)	(E)	(F)	I	R
1	1	171008-77010	STARTER, S114-483	1							
2	2	171008-77400	ARMATURE ASSY	1							
3	3	X2130350900	BALL BEARING	1							
4	3	X2114255110	BEARING, BALL	1							
6	3	171008-77440	COIL ASSY, FIELD	1							
7	4	171008-77450	SCREW	4							
8	4	171008-77460	BRUSH (+)	2							
9	2	171008-77470	HOLDER ASSY, BRUSH	1							
10	3	171008-77480	BRUSH (-)	2							
11	3	171008-77490	SPRING, BRUSH	4							
12	2	171008-77500	COVER, REAR	1							
13	2	171008-77510	HOUSING ASSY, GEAR	1							
14	2	171008-77520	HOUSING, CENTER	1							
15	2	171008-77531	MAGNETIC SWITCH ASSY	1							
16	2	171008-77540	LEVER SET, SHIFT	1							
19	2	171008-77571	COVER KIT, DUST	1							
20	2	171008-77640	BOLT, THROUGH	2							
21	2	171008-77650	PINION ASSY	1							
22	3	171008-77660	SHAFT, PINION	1							
23	3	171008-77670	STOPPER SET, PINION	1							
27	3	X2114555500	CLUTCH ASSY	1							
28	4	X2114955020	BALL BEARING	1							
29	4	X2240410100	BEARING, BALL	1							
30	2	171008-77750	COVER, M TERMINAL	1							
31	2	26106-060322	BOLT, M6X 32 PLATED	2							
32	2	26106-060402	BOLT, M6X 40 PLATED	3							
33	1	124450-01610	STUD	2							
34	1	124550-77030	COVER, TERMINAL	1							
35	1	26716-120002	NUT, M12	2							

N:Old ←Yes/No→ New. Q:Old ←No/Yes→ New. R:Old ←Yes/Yes→ New. S:Old ←No/No→ New. W:Add. Z:Discontinued. F:Interchangeable by set. K:Q'ty Change

Copyright (C) YANMAR GLOBAL CS CO., LTD. All RightsReserved.

Fig.14. GENERATOR

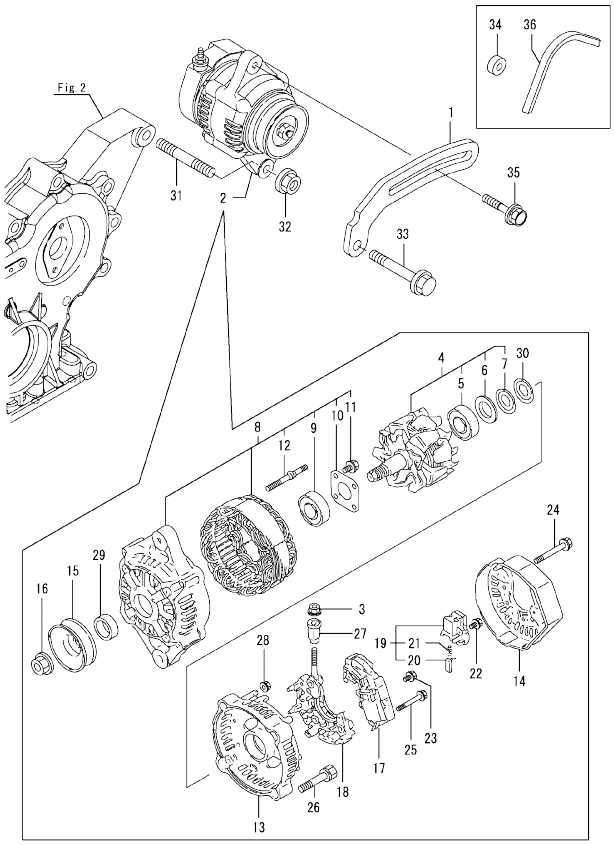

				Q'ty							
				(A)=3TNV82A-GGK			(D)=				
				(B)=			(E)=				
				(C)=			(F)=				
No.	Lev.	Parts No.	Description	(A)	(B)	(C)	(D)	(E)	(F)	I	R
1	1	119940-77330	ADJUSTER, BELT	1							
2	1	129423-77200	GENERATOR, 12V-40A	1							Z
	(A=*2004.05)										
3	2	X9490561001	NUT	1							Z
	(A=*2004.05)										
4	2	119620-77380	ROTOR ASSY	1							Z
	(A=*2004.05)										
5	3	119620-79240	BEARING, BALL	1							Z
	(A=*2004.05)										
6	3	119620-79250	COVER, BEARING	1							Z
	(A=*2004.05)										
7	3	119620-79360	WASHER, THRUST	1							Z
	(A=*2004.05)										
8	2	119620-77421	FRAME ASSY, DRIVE	1							Z
	(A=*2004.05)										
9	3	119620-79200	BEARING, BALL	1							Z
	(A=*2004.05)										
10	3	119620-79210	PLATE, RETAINER	1							Z
	(A=*2004.05)										
11	3	119620-79220	SCREW	4							Z
	(A=*2004.05)										
12	3	119620-79230	STUD	2							Z
	(A=*2004.05)										
13	2	119620-77440	FRAME ASSY, REAR	1							Z
	(A=*2004.05)										
14	2	129240-79300	COVER	1							Z
	(A=*2004.05)										
15	2	119620-77461	PULLEY, GENERATOR	1							Z
	(A=*2004.05)										
16	2	119620-77471	NUT	1							Z
	(A=*2004.05)										
17	2	129423-77710	REGULATOR ASSY	1							Z
	(A=*2004.05)										
18	2	119620-79260	HOLDER ASSY	1							Z
	(A=*2004.05)										
19	2	119620-79270	HOLDER ASSY, BRUSH	1							Z
	(A=*2004.05)										
20	3	119620-77480	BRUSH ASSY, SUB	2							Z
	(A=*2004.05)										
21	3	119620-79280	SPRING	2							Z
	(A=*2004.05)										
22	2	119620-79290	SCREW	1							Z
	(A=*2004.05)										
23	2	119620-79300	SCREW	1							Z
	(A=*2004.05)										
24	2	119620-79310	BOLT	3							Z
	(A=*2004.05)										
25	2	119620-79320	SCREW, W/WASHER	2							Z
	(A=*2004.05)										
26	2	119620-79330	BOLT	2							Z
	(A=*2004.05)										

Remarks
(1)Loose parts.

N:Old ←Yes/No→ New. Q:Old ←No/Yes→ New. R:Old ←Yes/Yes→ New. S:Old ←No/No→ New. W:Add. Z:Discontinued. F:Interchangeable by set. K:Q'ty Change

++ CONTINUE ++

Copyright (C) YANMAR GLOBAL CS CO., LTD. All RightsReserved.

Fig.14. GENERATOR

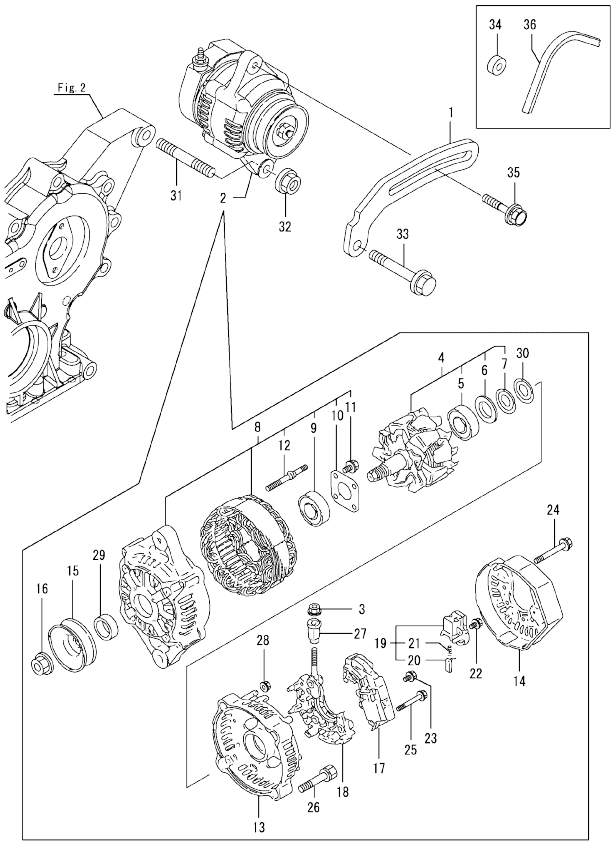

(A)=3TNV82A-GGK
(B)=
(C)=
(D)=
(E)=
(F)=

No.	Lev.	Parts No.	Description	Q'ty (A)	(B)	(C)	(D)	(E)	(F)	I	R
27	2	119620-79340	BUSH, INSULATION	1						Z	
	(A=*2004.05)										
28	2	119620-79350	NUT	2						Z	
	(A=*2004.05)										
29	2	119620-77490	COLLAR	1						Z	
	(A=*2004.05)										
30	2	119620-79360	WASHER, THRUST	1						Z	
	(A=*2004.05)										
31	1	129795-01900	BOLT, M10X33	1							
32	1	26306-100002	NUT, M10	1						Z	
	(A=*2004.05)										
33	1	26106-080452	BOLT, M8X 45 PLATED	1							
34	1	119940-77270	SPACER, GENERATOR	1							1
35	1	119802-77340	BOLT, ADJUSTER L=40	1						Z	
	(A=*2004.05)										
36	1	25132-004400	V-BELT, A44	1						W	1
	(A=*2004.05)										

Remarks
(1)Loose parts.

N:Old ←Yes/No→ New. Q:Old ←No/Yes→ New. R:Old ←Yes/Yes→ New. S:Old ←No/No→ New. W:Add. Z:Discontinued. F:Interchangeable by set. K:Q'ty Change

Copyright (C) YANMAR GLOBAL CS CO., LTD. All RightsReserved.

Fig.15. GASKET SET

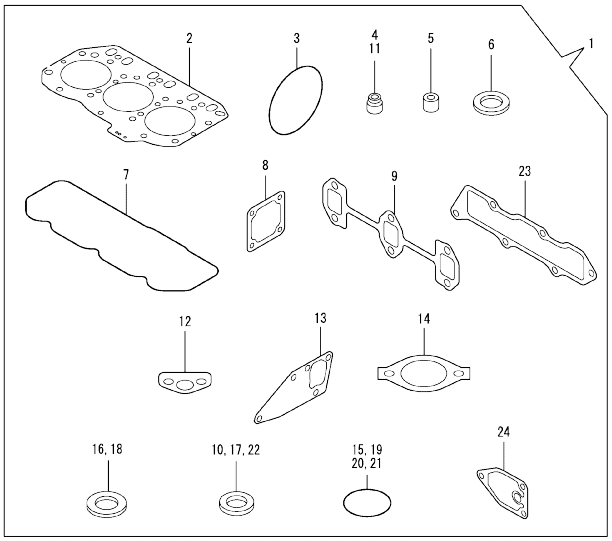

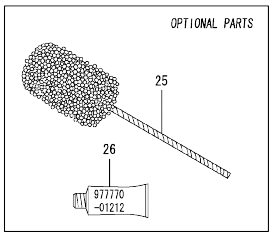

(A)=3TNV82A-GGK (D)=
(B)= (E)=
(C)= (F)=

No.	Lev.	Parts No.	Description	Q'ty (A)	(B)	(C)	(D)	(E)	(F)	I	R
1	1	719823-92770	GASKET SET	1							1
2	2	119812-01330	GASKET, HEAD	1							
3	2	121850-51960	O-RING	1							
4	2	124950-11340	SEAL, VALVE STEM	3							
5	2	119802-11870	PROTECTOR, NOZZLE	3							
6	2	119625-11880	SEAT, NOZZLE	3							
7	2	119802-11310	GASKET, BONNET	1							
8	2	129150-77511	GASKET	1							
9	2	119810-13110	GASKET	1							
10	2	22190-220002	WASHER, SEAL 22	1							
11	2	124160-11340	SEAL, VALVE STEM	3							
12	2	129150-35041	GASKET	1							
13	2	129486-42050	GASKET, WATER PUMP	1							
14	2	129795-49551	GASKET	1							
15	2	119609-32040	O-RING, P16	4							
16	2	23414-080000	GASKET, 8X1.0	1							
17	2	22190-080002	WASHER, SEAL 6	2							
18	2	124465-44950	GASKET, 16	2							
19	2	24311-000120	O-RING, 1AP12.0	3							
20	2	24311-000320	O-RING, 1AP32.0	2							
21	2	24341-000240	O-RING, 1AS24.0	1							
22	2	22190-100002	WASHER, SEAL 10	2							
23	2	119813-12110	GASKET, MANIFOLD	1							
24	2	129150-35111	GASKET	1							
25	1	129400-92420	FLEX HORN	1							1
26	1	977770-01212	GASKET, LIQUID	1							1

Remarks
(1) OPTIONAL PART.

N:Old ←Yes/No→ New. Q:Old ←No/Yes→ New. R:Old ←Yes/Yes→ New. S:Old ←No/No→ New. W:Add. Z:Discontinued. F:Interchangeable by set. K:Q'ty Change

Copyright (C) YANMAR GLOBAL CS CO., LTD. All RightsReserved.

Fig.16. FUEL INJECTION PUMP(INNER PARTS)

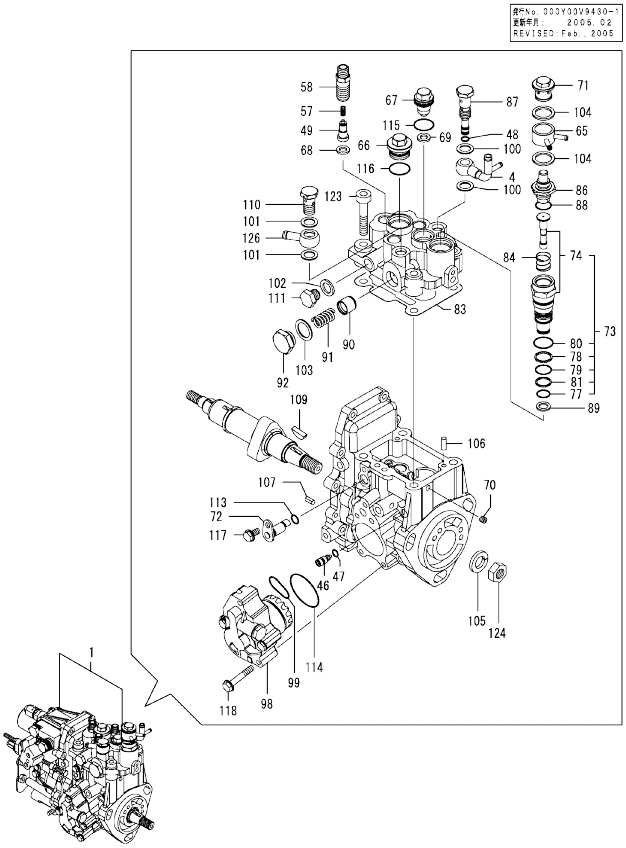

Remarks
(1) GOVERNOR ASSY(FIG.17) IS INCORPORATED IN THIS FOP.CMP (REF.NO.1).

(A)=3TNV82A-GGK
(B)=
(C)=
(D)=
(E)=
(F)=

No.	Lev.	Parts No.	Description	Q'ty (A)	(B)	(C)	(D)	(E)	(F)	I	R
1	1	719946-51390	PUMP ASSY, INJECTION	1							1
4	2	158552-51670	JOINT, OVER FLOW	1							
46	2	158600-51270	STOPPER, TAPPET	1							
47	2	158563-51281	O-RING, 4D S6	1							
48	2	158563-51281	O-RING, 4D S6	1							
49	2	158560-51300	VALVE ASSY, DELIVERY	3							
57	2	158563-51330	SPRING, DELIVERY	3							
58	2	158601-51340	HOLDER, DELIVERY	3							
65	2	158553-51551	JOINT	1							
66	2	158601-51550	PLUG	1							
67	2	119802-51560	PLUG, BARREL	1							
68	2	158552-51570	GASKET	3							
69	2	158552-51570	GASKET	1							
70	2	158557-51570	PLUG	1							
71	2	158601-51570	PLUG	1							
72	2	158552-51580	LIFTER	1							
73	2	119802-51590	TIMER SET	1							
74	3	119802-51600	TIMER ASSY	1							
77	3	158553-51670	O-RING, 1011	1							
78	3	119802-51680	RING, BACK UP	1							
79	3	119802-51690	O-RING	1							
80	3	24356-010200	O-RING, 4D1020	1							
81	3	24372-000150	RING, BACK UP T2P15	1							
83	2	158552-51600	GASKET	1							
84	2	158553-51630	SPRING, TIMER	1							
86	2	158553-51640	ELEMENT	1							
87	2	158601-51650	JOINT, OVER FLOW	1							
88	2	158553-51660	O-RING, P14	1							
89	2	158553-51680	GASKET	1							
90	2	158601-51770	PISTON	1							
91	2	158552-51780	SPRING	1							
92	2	158601-51790	PLUG	1							
98	2	158552-52100	PUMP ASSY, FUEL FEED	1							
99	2	158552-52310	O-RING	1							
100	2	22190-120002	WASHER, SEAL 12	2							
101	2	22190-120002	WASHER, SEAL 12	2							
102	2	22190-120002	WASHER, SEAL 12	1							
103	2	22190-180002	WASHER, SEAL 18	1							
104	2	22190-180002	WASHER, SEAL 18	2							
105	2	22217-140000	WASHER, SPRING 14	1							
106	2	22312-050140	PIN, PARALLEL M5X14	2							
107	2	22351-050010	PIN, SPRING 5.0X10	2							
109	2	119802-51090	KEY, 4X16	1							
110	2	23857-060000	BOLT, JOINT 6	1							
111	2	23887-120002	PLUG, 12	1							
113	2	24311-000070	O-RING, 1AP7.0	1							
114	2	158552-52400	O-RING, 4E S42	1							
115	2	24356-010180	O-RING, 4D1018	1							
116	2	24356-010200	O-RING, 4D1020	1							
117	2	26106-060102	BOLT, M6X 10 PLATED	1							
118	2	158553-51770	BOLT	4							

N:Old ←Yes/No→ New. Q:Old ←No/Yes→ New. R:Old ←Yes/Yes→ New. S:Old ←No/No→ New. W:Add. Z:Discontinued. F:Interchangeable by set. K:Q'ty Change

++ CONTINUE ++

Copyright (C) YANMAR GLOBAL CS CO., LTD. All RightsReserved.

Fig.16. FUEL INJECTION PUMP(INNER PARTS)

(A)=3TNV82A-GGK
(B)=
(C)=
(D)=
(E)=
(F)=

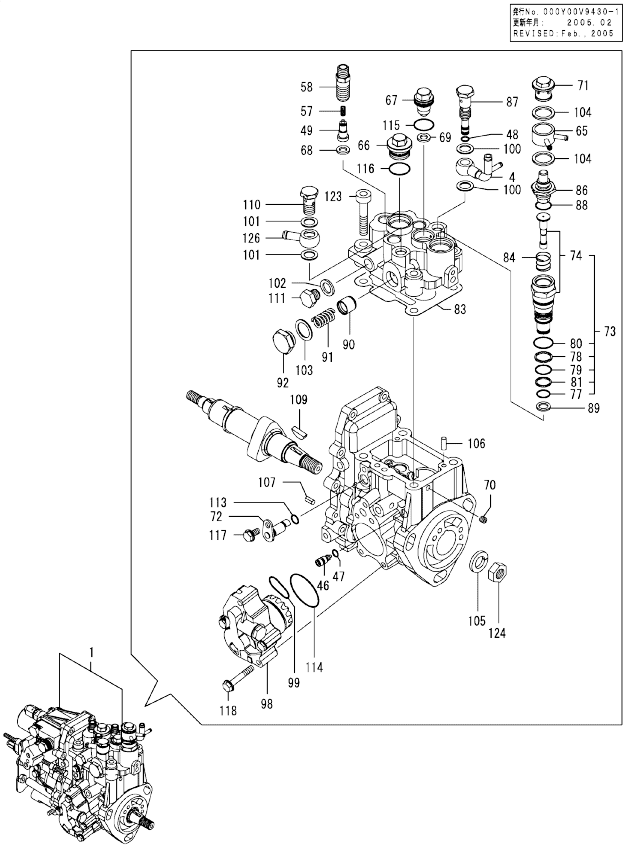

No.	Lev.	Parts No.	Description	Q'ty (A)	(B)	(C)	(D)	(E)	(F)	I	R
123	2	26450-080452	BOLT, M8X 45	4							
124	2	26776-140002	NUT, LOCK M14	1							
126	2	129916-59020	JOINT, PIPE 12	1							

Remarks
(1) GOVERNOR ASSY(FIG.17) IS INCORPORATED IN THIS FOP.CMP (REF.NO.1).

N:Old ←Yes/No→ New. Q:Old ←No/Yes→ New. R:Old ←Yes/Yes→ New. S:Old ←No/No→ New. W:Add. Z:Discontinued. F:Interchangeable by set. K:Q'ty Change

Copyright (C) YANMAR GLOBAL CS CO., LTD. All RightsReserved.

Fig.17. GOVERNOR (INNER PARTS)

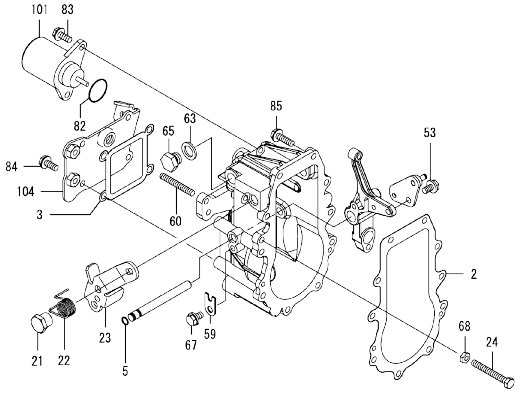

(A)=3TNV82A-GGK (D)=
(B)= (E)=
(C)= (F)=

No.	Lev.	Parts No.	Description	Q'ty (A)	(B)	(C)	(D)	(E)	(F)	I	R
2	2	158553-61050	GASKET	1							
3	2	158553-61070	GASKET	1							
5	2	129155-51280	O-RING, S6	1							
21	2	129255-61410	NUT, LOCK	1							
22	2	119807-61420	SPRING, RETURN	1							
23	2	129246-61441	LEVER, REGULATOR	1							
24	2	129155-61460	BOLT, IDLE	1							
53	2	26106-060102	BOLT, M6X 10 PLATED	1							
59	2	119660-61901	RETAINER, SHAFT	1							
60	2	171002-66830	SCREW	1							
63	2	22190-120000	WASHER, SEAL 12	1							
65	2	23887-120002	PLUG, 12	1							
67	2	26106-060102	BOLT, M6X 10 PLATED	1							
68	2	26756-060002	NUT, LOCK M6	1							
82	2	24341-000280	O-RING, 1AS28.0	1							
82-1	2	158552-61900	O-RING	1						N	
	(A=EXXXXX)										
83	2	26106-060142	BOLT, M6X 14 PLATED	2							
84	2	26106-060142	BOLT, M6X 14 PLATED	4							
85	2	26106-060202	BOLT, M6X 20 PLATED	10							
101	2	119653-77950	SOLENOID, STOP	1							
104	2	129246-61061	COVER, GOVERNOR CASE	1							

Remarks
* THIS FIGURE(GOVERNOR ASSY)IS INCORPORATED IN THE FUEL INJECTION PUMP ASSY(FIG.16).

N:Old ◄Yes/No► New. Q:Old ◄No/Yes► New, R:Old ◄Yes/Yes► New, S:Old ◄No/No► New. W:Add. Z:Discontinued. F:Interchangeable by set. K:Q'ty Change

Copyright (C) YANMAR GLOBAL CS CO., LTD. All RightsReserved.

Parts No. Index

Parts No.	Fig. No.	Ref. No.
104211-11180	4	27
104211-11370	4	14
114250-39450	8	9
114250-53080	11	5
114250-53120	11	10
114250-53130	11	11
114250-53140	11	12
114250-53210	11	13
114250-53400	11	14
119305-59120	11	26
119609-32040	2	17
	15	15
119620-02020	1	12
119620-49290	9	25
119620-77380	14	4
119620-77421	14	8
119620-77440	14	13
119620-77461	14	15
119620-77471	14	16
119620-77480	14	20
119620-77490	14	29
119620-79200	14	9
119620-79210	14	10
119620-79220	14	11
119620-79230	14	12
119620-79240	14	5
119620-79250	14	6
119620-79260	14	18
119620-79270	14	19
119620-79280	14	21
119620-79290	14	22
119620-79300	14	23
119620-79310	14	24
119620-79320	14	25
119620-79330	14	26
119620-79340	14	27
119620-79350	14	28
119620-79360	14	7
		30
119625-11880	4	32
	15	6
119640-01640	3	9
119653-77950	17	101
119660-61901	17	59
119802-01190	1	38
119802-01520	2	12
119802-01560	2	13
119802-03010	4	41
119802-03080	5	1
119802-03110	4	43

Parts No.	Fig. No.	Ref. No.
119802-03120	4	44
119802-03130	4	45
119802-03140	4	46
119802-11100	4	24
119802-11110	4	25
119802-11241	4	3
119802-11251	4	4
119802-11260	4	6
119802-11270	4	7
119802-11280	4	8
119802-11310	4	49
	15	7
119802-11350	4	40
119802-11650	4	10
119802-11700	4	15
119802-11810	4	21
119802-11870	4	55
	15	5
119802-11900	4	33
119802-12100	5	3
119802-14590	6	3
119802-21001	7	1
119802-21201	7	5
119802-21660	7	9
119802-22080	7	16
119802-22500	7	18
119802-25051	6	10
119802-25070	6	14
119802-25100	6	11
119802-25901	6	17
119802-32070	2	8
119802-32100	2	7
119802-32111	2	18
119802-32120	2	19
119802-32130	2	20
119802-34811	8	1
119802-35100	8	20
119802-35110	8	21
119802-39450	8	11
119802-42000	9	1
119802-49610	9	31
119802-49620	9	36
119802-49711	9	32
119802-49721	9	37
119802-49730	9	33
119802-51090	16	109
119802-51250	10	2
119802-51560	16	67
119802-51590	16	73
119802-51600	16	74

Parts No.	Fig. No.	Ref. No.
119802-51680	16	78
119802-51690	16	79
119802-55800	12	2
119802-59100	12	4
119802-59110	12	5
119802-59320	9	35
119802-59570	11	48
119802-59810	11	35
119802-59820	11	39
119802-59830	11	43
119802-77340	14	35
119807-61420	17	22
119810-01200	1	30
119810-01730	3	6
119810-02870	1	32
119810-02930	1	27
119810-02940	1	35
119810-11120	4	26
119810-13110	5	11
	15	9
119810-14400	6	2
119810-23200	7	29
119810-23600	7	30
119810-23610	7	32
119810-23910	7	28
119810-35401	8	4
119810-42051	9	3
119810-42120	9	4
119810-42281	9	8
119810-42290	9	9
119812-01330	1	31
	15	2
119813-12110	5	5
	15	23
119813-22300	7	22
119843-01780	3	8
119940-77270	14	34
119940-77330	14	1
119946-53000	11	2
120270-54410	4	34
121023-01550	2	28
121111-21501	7	12
121450-42450	9	24
121520-34810	8	2
121850-21680	7	11
121850-51960	2	21
	15	3
124060-01050	1	6
124060-11800	4	19
124101-49530	9	20

Parts No.	Fig. No.	Ref. No.
124160-01751	2	14
	4	39
124160-01910	1	4
		14
124160-11340	4	28
	15	11
124160-11360	4	52
124160-39140	8	10
124240-01871	2	15
124450-01610	13	33
124465-44950	9	23
	15	18
124550-21600	7	15
124550-77030	13	34
124722-59050	9	34
		38
124950-11340	4	29
	15	4
129001-01250	1	7
129001-32330	2	11
129001-91841	2	22
129004-55610	12	1
129005-59830	8	12
129100-01580	3	1
		14
	7	2
129100-01640	3	15
129100-35140	8	22
129150-02450	6	4
129150-03070	4	42
129150-11230	4	11
129150-11280	4	9
129150-11750	4	13
129150-14101	6	6
129150-14200	6	1
129150-25301	6	16
129150-35041	8	3
	15	12
129150-35111	8	23
	15	24
129150-35170	8	18
129150-42320	9	11
129150-59120	11	30
129150-59131	11	29
		33
129150-77511	5	8
	15	8
129155-42350	9	19
129155-51280	17	5
129155-61460	17	24

Parts No. Index

Parts No.	Fig. No.	Ref. No.
129176-01601	3	2
129240-79300	14	14
129246-61061	17	104
129246-61441	17	23
129255-61410	17	21
129270-59550	11	47
129270-59580	11	49
129400-92420	15	25
129410-03990	5	2
129418-32320	2	10
129423-77200	14	2
129423-77710	14	17
129486-01670	3	18
129486-12581	5	9
129486-42050	9	39
	15	13
129489-21570	7	13
129792-22400	7	23
129795-01780	3	17
129795-01800	2	6
129795-01900	14	31
129795-01950	2	16
129795-02411	1	13
129795-21661	7	10
129795-49551	9	21
	15	14
129900-07900	4	1
129900-32130	2	9
129916-59020	16	126
158552-51151	6	18
158552-51570	16	68
		69
158552-51580	16	72
158552-51600	16	83
158552-51670	16	4
158552-51780	16	91
158552-52100	16	98
158552-52310	16	99
158552-52400	16	114
158552-61900	17	82 -1
158553-51551	16	65
158553-51630	16	84
158553-51640	16	86
158553-51660	16	88
158553-51670	16	77
158553-51680	16	89
158553-51770	16	118
158553-61050	17	2
158553-61070	17	3
158557-51570	16	70

Parts No.	Fig. No.	Ref. No.
158560-51300	16	49
158563-51281	16	47
		48
158563-51330	16	57
158600-51270	16	46
158601-51340	16	58
158601-51550	16	66
158601-51570	16	71
158601-51650	16	87
158601-51770	16	90
158601-51790	16	92
171002-66830	17	60
171008-77010	13	1
171008-77400	13	2
171008-77440	13	6
171008-77450	13	7
171008-77460	13	8
171008-77470	13	9
171008-77480	13	10
171008-77490	13	11
171008-77500	13	12
171008-77510	13	13
171008-77520	13	14
171008-77531	13	15
171008-77540	13	16
171008-77571	13	19
171008-77640	13	20
171008-77650	13	21
171008-77660	13	22
171008-77670	13	23
171008-77750	13	30
171051-01921	1	5
22190-080002	8	14
		15
	15	17
22190-100002	8	16
	15	22
22190-120000	17	63
22190-120002	16	100
		101
		102
22190-180002	16	103
		104
22190-220002	3	11
	15	10
22217-140000	6	19
	16	105
22312-050140	16	106
22351-030010	7	8
22351-050010	16	107

Parts No.	Fig. No.	Ref. No.
22351-060012	4	35
22512-070140	6	7
	7	6
22857-500100	4	50
		51
23000-013000	11	50
23000-016000	12	6
23414-080000	9	28
	15	16
23857-030000	8	13
23857-060000	16	110
23876-030000	2	4
	9	13
23876-040000	2	5
23887-120002	16	111
	17	65
24311-000070	16	113
24311-000120	4	53
	15	19
24311-000320	2	23
	4	54
	15	20
24341-000240	2	29
	15	21
24341-000280	17	82
24356-010180	16	115
24356-010200	16	80
		116
24372-000150	16	81
25132-003800	9	18
25132-004400	14	36
26106-060102	16	117
	17	53
		67
26106-060142	9	14
	17	83
		84
26106-060162	2	30
26106-060202	9	15
	17	85
26106-060322	13	31
26106-060402	13	32
26106-080122	9	29
26106-080142	4	2
	6	9
26106-080162	2	24
		25
	3	12
	10	3
26106-080202	5	6

Parts No.	Fig. No.	Ref. No.
26106-080202	5	10
	8	19
	10	4
26106-080252	4	36
	9	22
26106-080302	12	3
26106-080352	3	7
	8	8
	9	16
26106-080402	6	15
26106-080452	3	13
	4	37
	14	33
26106-080502	4	38
26106-080552	2	26
	9	17
26106-080602	9	30
26106-080802	5	7
26206-100202	3	4
26206-100252	3	5
26306-080002	2	27
26306-100002	14	32
26366-060002	8	17
26450-080452	16	123
26716-120002	13	35
26756-060002	17	68
26776-140002	6	8
	16	124
27241-120000	1	8
27241-300000	1	9
27241-400000	4	23
27310-070001	4	30
719802-01500	2	1
719802-01560	1	1
719802-22900	7	34
719802-22950	7	36
719810-02980	1	24
719810-23100	7	24
719823-92770	15	1
719946-51390	10	1
	16	1
719946-53100	11	1
977770-01212	2	31
	3	3
	4	56
	15	26
X2114255110	13	4
X2114555500	13	27
X2114955020	13	28
X2130350900	13	3

Parts No. Index

Parts No.	Fig. No.	Ref. No.
X2240410100	13	29
X9490561001	14	3

Parts No.	Fig. No.	Ref. No.

Parts No.	Fig. No.	Ref. No.

Parts No.	Fig. No.	Ref. No.