YANMAR

PARTS CATALOG

0CD11-M00501EN

Last update May., 2013

PREFACE

This parts catalog is the 2nd edition of 3TNV82A-QYB for KOBELCO CONSTRUCTION MACHINERY CO., LTD..

Published : November, 2015

Contents

0CD11-M00501

Fig. No.	Fig. Name
3TNV82A-QYB	
1.	CYLINDER BLOCK
2.	GEAR HOUSING
3.	FLYWHEEL HOUSING & OIL SUMP
4.	CYLINDER HEAD & BONNET
5.	SUCTION MANIFOLD
6.	EXHAUST MANIFOLD
7.	CAMSHAFT & DRIVING GEAR
8.	CRANKSHAFT & PISTON
9.	LUB. OIL SYSTEM
10.	COOLING WATER SYSTEM
11.	FUEL INJECTION PUMP
12.	GOVERNOR
13.	FUEL INJECTION VALVE
14.	FUEL PIPE
15.	STARTER MOTOR
16.	GENERATOR
17.	GASKET SET

Fig. No.	Fig. Name

0CD11-M00501 3TNV82A-QYB

Fig.1. CYLINDER BLOCK

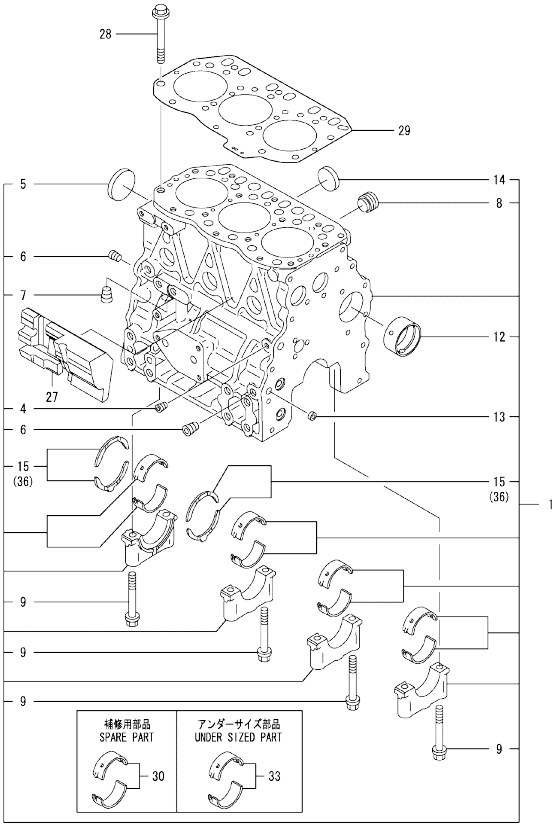

Remarks
(1)Spare parts.
(2)Under-sized(U.S.=0.25) parts.
(3)Over-sized(O.S.=0.25) parts.

0CD11-M00501 Fig.1

(A)=3TNV82A-QYB (D)=
(B)= (E)=
(C)= (F)=

No.	Lev.	Parts No.	Description	Q'ty (A)	(B)	(C)	(D)	(E)	(F)	I	R
1	1	719802-01560	BLOCK ASSY, CYLINDER	1							
4	2	124060-01050	PLUG, PT1/8	1							
5	2	129001-01250	PLUG, DISH TYPE 50	1							
6	2	124160-01910	PLUG, PT1/4	2							
7	2	124160-01910	PLUG, PT1/4	1							
8	2	171051-01921	PLUG, NPTF1	1							
9	2	119620-02020	BOLT, METAL CAP	8							
12	2	129795-02412	BUSH, CAMSHAFT	1							
13	2	27241-120000	PLUG, 12	2							
14	2	27241-300000	PLUG 30	6							
15	2	119717-02930	BEARING ASSY, THRUST	2							
27	1	119802-01190	SPACER	1							
28	1	119810-01200	BOLT, CYLINDER HEAD	14							
29	1	119812-01330	GASKET, HEAD	1							
30	1	719810-02981	BEARING ASSY, MAIN	4							1
33	1	119810-02871	BEARING ASSY, MAIN	4							2
36	1	119810-02941	BEARING, THRUST 0.25	2							3

N:Old ←Yes/No→ New. Q:Old ←No/Yes→ New. R:Old ←Yes/Yes→ New. S:Old ←No/No→ New. W:Add. Z:Discontinued. F:Interchangeable by set. K:Q'ty Change

Copyright (C) 2015 YANMAR GLOBAL CS CO., LTD. All RightsReserved.

Fig.2. GEAR HOUSING

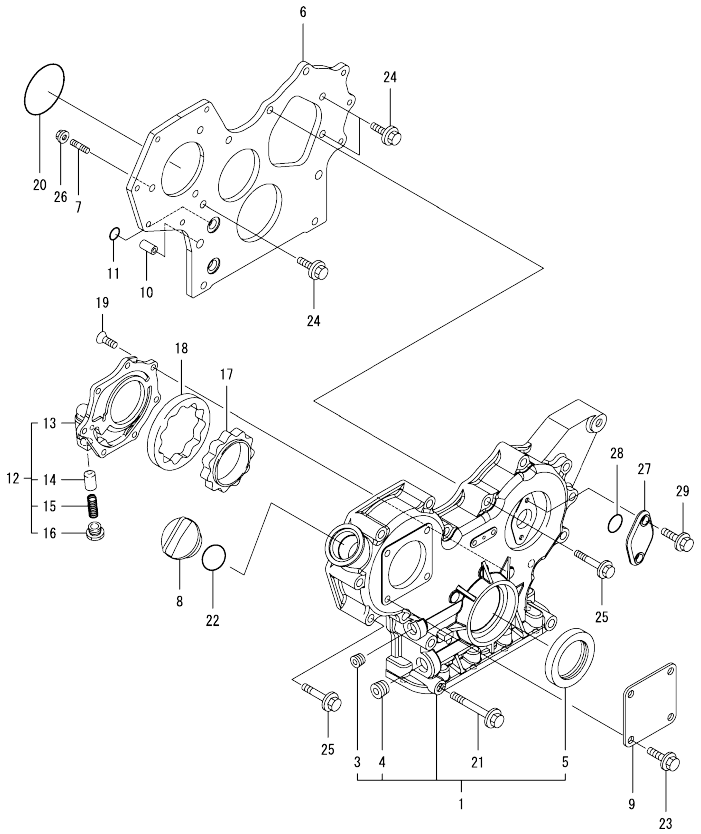

(A)=3TNV82A-QYB (D)=
(B)= (E)=
(C)= (F)=

No.	Lev.	Parts No.	Description	Q'ty (A)	(B)	(C)	(D)	(E)	(F)	I	R
1	1	719802-01500	CASE ASSY, GEAR	1							
3	2	23876-030000	PLUG, R03	1							
4	2	23876-040000	PLUG, R04	1							
5	2	119934-01800	SEAL, OIL	1							
6	1	119802-01520	FLANGE, GEAR CASE	1							
7	1	119802-01561	BOLT, STUD M8X25	3							
8	1	124160-01751	CAP, FILLER	1							
9	1	124240-01871	COVER, PUMP	1							
10	1	129795-01950	PIPE, DOWEL L=18	2							
11	1	119609-32040	O-RING, P16	4							
12	1	119802-32100	COVER ASSY	1							
13	2	119802-32070	COVER, PUMP	1							
14	2	129900-32130	VALVE, RELIEF	1							
15	2	129418-32320	SPRING	1							
16	2	129001-32330	PLUG	1							
17	1	119802-32111	ROTOR, INNER	1							
18	1	119802-32120	ROTOR, OUTER	1							
19	1	119802-32130	SCREW, M6X16	7							
20	1	121850-51960	O-RING	1							
21	1	129001-91841	BOLT, M8X87	3							
21-1	1	26106-080852	BOLT, M8X 85 PLATED	3							R
	(A=E68300)										
22	1	24311-000320	O-RING, 1AP32.0	1							
23	1	26106-080162	BOLT, M8X 16 PLATED	4							
24	1	26106-080162	BOLT, M8X 16 PLATED	3							
25	1	26106-080552	BOLT, M8X 55 PLATED	12							
26	1	26306-080002	NUT, M8	3							
27	1	121023-01551	COVER	1							
28	1	24341-000240	O-RING, 1AS24.0	1							
29	1	26106-060162	BOLT, M6X 16 PLATED	2							

N:Old ◄Yes/No► New. Q:Old ◄No/Yes► New. R:Old ◄Yes/Yes► New. S:Old ◄No/No► New. W:Add. Z:Discontinued. F:Interchangeable by set. K:Q'ty Change

Copyright (C) 2015 YANMAR GLOBAL CS CO., LTD. All RightsReserved.

Fig.3. FLYWHEEL HOUSING & OIL SUMP

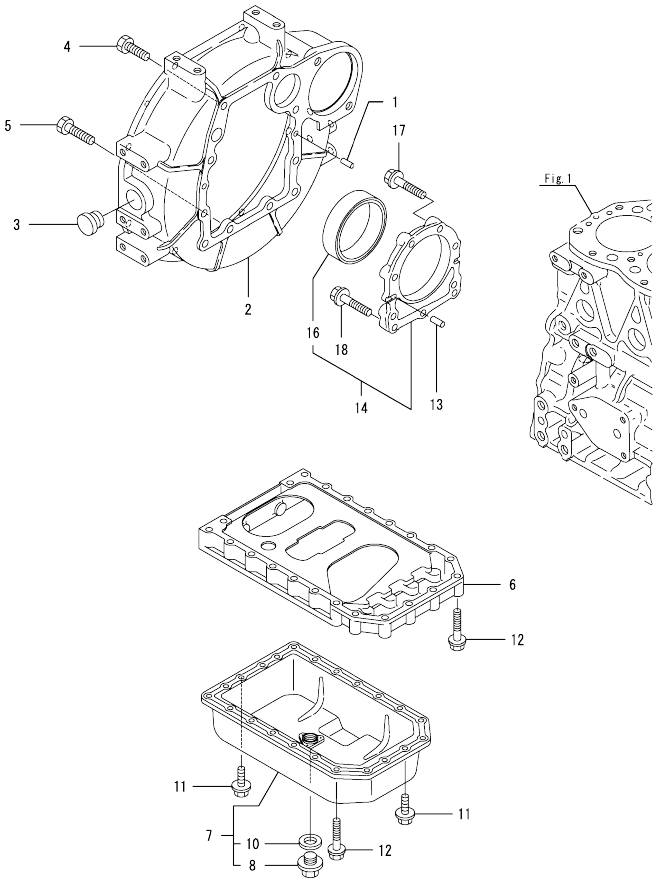

(A)=3TNV82A-QYB (D)=
(B)= (E)=
(C)= (F)=

No.	Lev.	Parts No.	Description	Q'ty (A)	(B)	(C)	(D)	(E)	(F)	I	R
1	1	129100-01580	PIN, PARALLEL 8X16	2							
2	1	129612-01600	HOUSING, FLYWHEEL	1							
3	1	119620-01750	CAP	1							
4	1	26206-100252	BOLT, M10X 25 PLATED	6							
5	1	26206-100302	BOLT, M10X 30 PLATED	4							
6	1	119810-01730	SPACER, OIL-PAN	1							
7	1	119810-01790	OIL PAN ASSY	1							
8	2	119640-01640	PLUG, DRAIN M22	1							
10	2	22190-220002	WASHER, SEAL 22	1							
11	1	26106-080162	BOLT, M8X 16 PLATED	6							
12	1	26106-080452	BOLT, M8X 45 PLATED	22							
13	1	129100-01580	PIN, PARALLEL 8X16	2							
14	1	129100-01640	CASE ASSY, OIL SEAL	1							
16	2	129795-01780	SEAL, OIL	1							
17	1	129486-01670	BOLT, M8X30	6							
18	1	26106-080352	BOLT, M8X 35 PLATED	3							

N:Old ◄Yes/No► New. Q:Old ◄No/Yes► New, R:Old ◄Yes/Yes► New, S:Old ◄No/No► New. W:Add. Z:Discontinued. F:Interchangeable by set. K:Q'ty Change

Copyright (C) 2015 YANMAR GLOBAL CS CO., LTD. All RightsReserved.

Fig.4. CYLINDER HEAD & BONNET

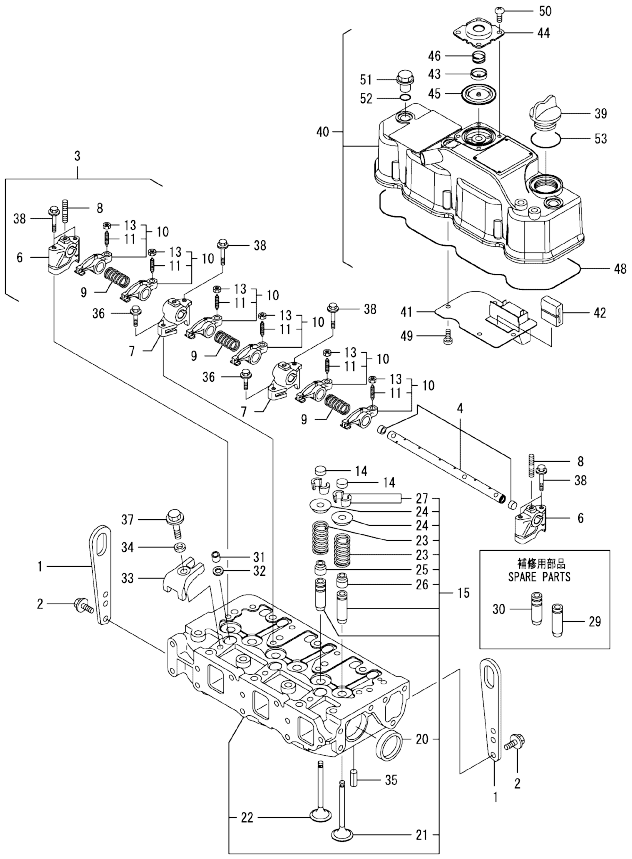

(A)=3TNV82A-QYB
(B)=
(C)=
(D)=
(E)=
(F)=

No.	Lev.	Parts No.	Description	Q'ty (A)	(B)	(C)	(D)	(E)	(F)	I	R
1	1	129900-07900	LIFTER, ENGINE	2							
2	1	26106-080162	BOLT, M8X 16 PLATED	4							
3	1	119802-11241	SHAFT ASSY, ROCKER	1							
4	2	119802-11251	SHAFT, ROCKER ARM	1							
6	2	119802-11260	SUPPORT, ROCKER ARM	2							
7	2	119802-11270	SUPPORT, ROCKER ARM	2							
8	2	119802-11280	BOLT, STUD	3							
9	2	129150-11280	SPRING, ROCKER	3							
10	2	119802-11650	ARM ASSY, ROCKER	6							
11	3	129150-11230	SCREW, VALVE ADJUST	6							
13	3	129150-11750	NUT, M8	6							
14	1	104211-11370	CAP, VALVE	6							
15	1	119802-11700	HEAD ASSY, CYLINDER	1							
20	2	27241-400000	PLUG, 40	2							
21	2	119802-11100	VALVE, SUCTION	3							
22	2	119802-11110	VALVE, EXHAUST	3							
23	2	119810-11120	SPRING, VALVE	6							
24	2	104211-11180	RETAINER, SPRING	6							
25	2	119803-11340	SEAL, VALVE STEM	3							
26	2	124160-11340	SEAL, VALVE STEM	3							
27	2	27310-070001	COTTER, 7	6							
29	1	124060-11800	GUIDE, INTAKE VALVE	3							1
30	1	119802-11810	GUIDE, VALVE	3							1
31	1	119802-11870	PROTECTOR, NOZZLE	3							
32	1	119625-11880	SEAT, NOZZLE	3							
33	1	119802-11900	RETAINER, NOZZLE	3							
34	1	120270-54410	WASHER, INJECTOR	3							
35	1	22351-060012	PIN, SPRING 6.0X12	2							
36	1	26106-080252	BOLT, M8X 25 PLATED	2							
37	1	26106-080452	BOLT, M8X 45 PLATED	3							
38	1	26106-080502	BOLT, M8X 50 PLATED	6							
39	1	124160-01751	CAP, FILLER	1							
40	1	119802-11350	BONNET ASSY, HEAD	1							
41	2	119802-03010	PLATE, BAFFLE	1							
42	2	129150-03070	BAFFLE, BREATHER	1							
43	2	119802-03110	PLATE, DIAPHRAGM	1							
44	2	119802-03121	COVER, DIAPHRAGM	1							
45	2	119802-03130	DIAPHRAGM	1							
46	2	119802-03141	SPRING, DIAPHRAGM	1							
48	2	119802-11310	GASKET, BONNET	1							
49	2	22857-500100	SCREW, 5X10	4							
50	2	22857-500100	SCREW, 5X10	4							
51	1	124160-11360	KNOB	3							
52	1	24311-000120	O-RING, 1AP12.0	3							
53	1	24311-000320	O-RING, 1AP32.0	1							

Remarks
(1)Spare parts.

N:Old $\frac{\text{Yes}}{\text{No}}$ New. Q:Old $\frac{\text{No}}{\text{Yes}}$ New. R:Old $\frac{\text{Yes}}{\text{Yes}}$ New. S:Old $\frac{\text{No}}{\text{No}}$ New. W:Add. Z:Discontinued. F:Interchangeable by set. K:Q'ty Change

Copyright (C) 2015 YANMAR GLOBAL CS CO., LTD. All RightsReserved.

Fig.5. SUCTION MANIFOLD

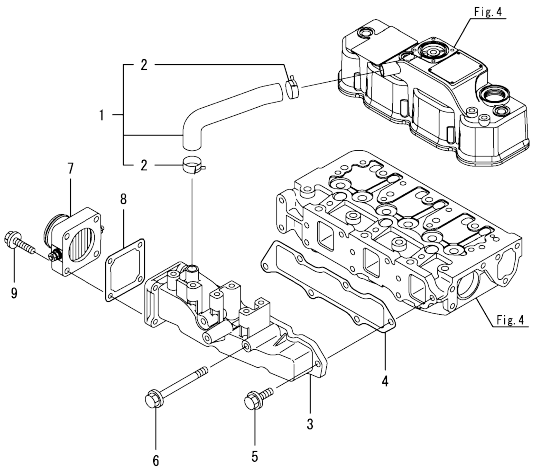

(A)=3TNV82A-QYB (D)=
(B)= (E)=
(C)= (F)=

No.	Lev.	Parts No.	Description	Q'ty (A)	(B)	(C)	(D)	(E)	(F)	I	R
1	1	119802-03080	HOSE ASSY, BREATHER	1							
2	2	129410-03990	CLAMP, HOSE 21.5	2							
3	1	119802-12100	MANIFOLD, AIR INTAKE	1							
4	1	119813-12110	GASKET, MANIFOLD	1							
5	1	26106-080202	BOLT, M8X 20 PLATED	4							
6	1	26106-080802	BOLT, M8X 80 PLATED	2							
7	1	129120-77502	HEATER, AIR	1							
8	1	129150-77511	GASKET, AIR HEATER	1							
9	1	26106-080352	BOLT, M8X 35 PLATED	4							

N:Old ◄Yes/No► New. Q:Old ◄No/Yes► New. R:Old ◄Yes/Yes► New. S:Old ◄No/No► New. W:Add. Z:Discontinued. F:Interchangeable by set. K:Q'ty Change

Copyright (C) 2015 YANMAR GLOBAL CS CO., LTD. All RightsReserved.

Fig.6. EXHAUST MANIFOLD

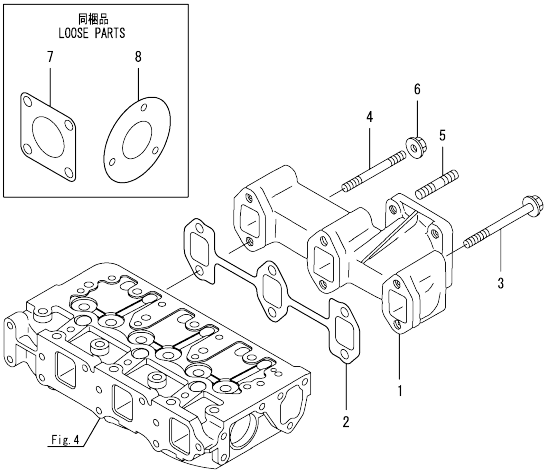

(A)=3TNV82A-QYB (D)=
(B)= (E)=
(C)= (F)=

No.	Lev.	Parts No.	Description	Q'ty (A)	(B)	(C)	(D)	(E)	(F)	I	R
1	1	119810-13100	MANIFOLD, EXHAUST	1							
2	1	119810-13110	GASKET, EXH.MANIFOLD	1							
3	1	119802-13640	BOLT, M8X60 10.9T	4							
3-1	1	119802-13641	BOLT, M8X60 10.9T	4						N	
	(A=EC9608)										
4	1	119802-13740	BOLT, STUD M8X60	2							
5	1	119131-18320	BOLT, STUD M8X22	4							
6	1	26306-080002	NUT, M8	2							
7	1	124701-11911	GASKET, SILENCER	1							
8	1	103954-13201	GASKET, SILENCER	1							

N:Old ◄Yes/No► New. Q:Old ◄No/Yes► New. R:Old ◄Yes/Yes► New. S:Old ◄No/No► New. W:Add. Z:Discontinued. F:Interchangeable by set. K:Q'ty Change

Copyright (C) 2015 YANMAR GLOBAL CS CO., LTD. All RightsReserved.

Fig.7. CAMSHAFT & DRIVING GEAR

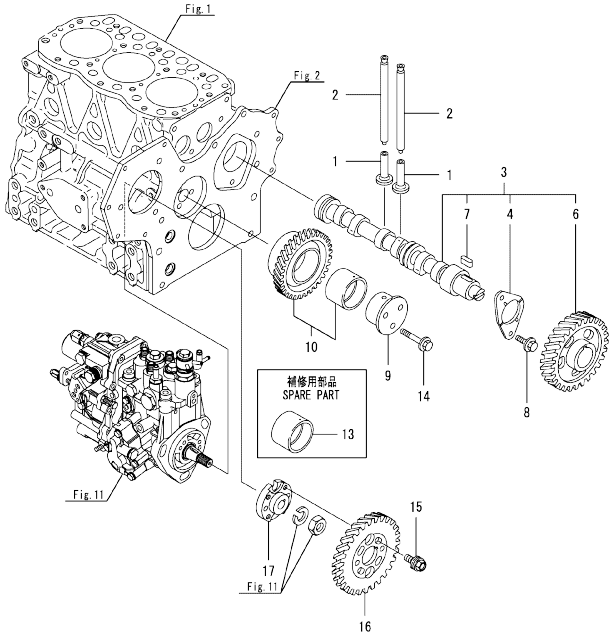

(A)=3TNV82A-QYB (D)=
(B)= (E)=
(C)= (F)=

No.	Lev.	Parts No.	Description	Q'ty (A)	(B)	(C)	(D)	(E)	(F)	I	R
1	1	129150-14200	TAPPET	6							
2	1	119810-14400	PUSH-ROD	6							
3	1	119802-14580	CAMSHAFT ASSY	1							
4	2	129150-02450	BEARING, THRUST	1							
6	2	129150-14101	GEAR, CAMSHAFT	1							
7	2	22512-070140	KEY, 7X 14	1							
8	1	26106-080142	BOLT, M8X 14 PLATED	2							
9	1	119802-25051	SHAFT, IDLE	1							
10	1	119802-25101	GEAR ASSY, IDLE	1							
13	1	119802-25071	BUSH, IDLE GEAR	1							1
14	1	26106-080402	BOLT, M8X 40 PLATED	3							
15	1	129150-25301	BOLT	4							
16	1	119802-25901	GEAR, PUMP	1							
17	1	158552-51151	FLANGE	1							

Remarks
(1)Spare parts.

N:Old ←Yes/No→ New. Q:Old ←No/Yes→ New. R:Old ←Yes/Yes→ New. S:Old ←No/No→ New. W:Add. Z:Discontinued. F:Interchangeable by set. K:Q'ty Change

Copyright (C) 2015 YANMAR GLOBAL CS CO., LTD. All RightsReserved.

0CD11-M00501 3TNV82A-QYB

Fig.8. CRANKSHAFT & PISTON

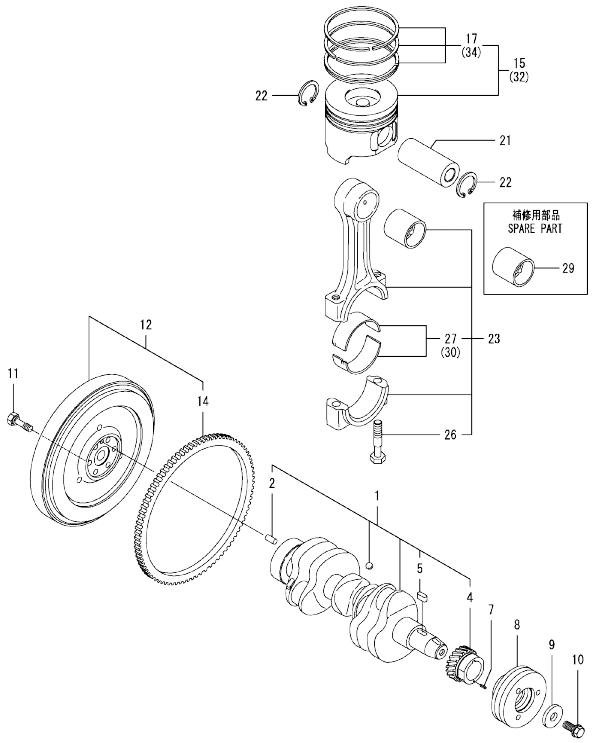

0CD11-M00501 Fig.8

(A)=3TNV82A-QYB (D)=
(B)= (E)=
(C)= (F)=

No.	Lev.	Parts No.	Description	Q'ty (A)	(B)	(C)	(D)	(E)	(F)	I	R
1	1	119802-21002	CRANKSHAFT ASSY	1							
2	2	129100-01580	PIN, PARALLEL 8X16	1							
4	2	119802-21202	GEAR, CRANKSHAFT	1							
5	2	22512-070140	KEY, 7X 14	1							
7	1	22351-030010	PIN, SPRING 3.0X10	1							
8	1	119802-21650	V-PULLEY, CRANK 110	1							
9	1	129795-21661	WASHER	1							
10	1	121850-21680	BOLT	1							
11	1	121111-21501	BOLT, FLYWHEEL	6							
12	1	129489-21590	FLYWHEEL ASSY	1							
14	2	119865-21600	GEAR, RING Z=116	1							
15	1	119802-22080	PISTON ASSY	3							
17	2	119802-22500	RING SET, PISTON	3							
21	1	119813-22300	PIN, PISTON	3							
22	1	129792-22400	CIRCLIP, 23	6							
23	1	719810-23100	ROD ASSY, CONNECTING	3							
26	2	119810-23200	BOLT, CONNECTING ROD	6							
27	2	119810-23601	BEARING, CRANK PIN	3							
29	1	119810-23910	BEARING, PISTON PIN	3							1
30	1	119810-23611	BEARING, 0.25 US	3							2
32	1	119802-22900	PISTON ASSY, 0.25 OS	3							3
34	2	119802-22950	RING SET, 0.25 OS	3							3

Remarks
(1)Spare parts.
(2)Under-sized(U.S.=0.25) parts.
(3)Over-sized(O.S.=0.25) parts.

N:Old ←Yes/No→ New. Q:Old ←No/Yes→ New. R:Old ←Yes/Yes→ New. S:Old ←No/No→ New. W:Add. Z:Discontinued. F:Interchangeable by set. K:Q'ty Change

Copyright (C) 2015 YANMAR GLOBAL CS CO., LTD. All RightsReserved.

Fig.9. LUB. OIL SYSTEM

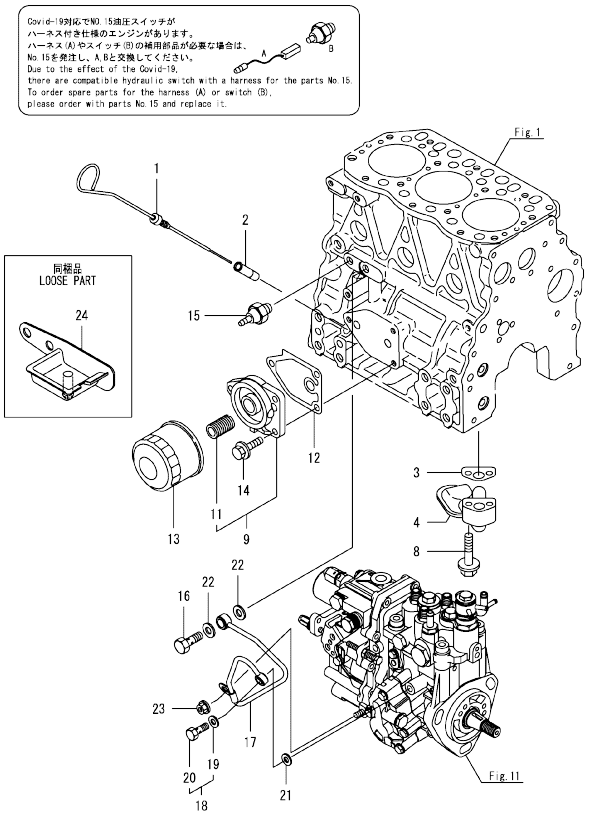

Remarks
(1)Spare parts.

(A)=3TNV82A-QYB (D)=
(B)= (E)=
(C)= (F)=

No.	Lev.	Parts No.	Description	Q'ty (A)	(B)	(C)	(D)	(E)	(F)	I	R
1	1	119640-34800	DIPSTICK, OIL	1							
2	1	121520-34810	GUIDE, DIPSTICK	1							
3	1	129150-35042	GASKET	1							
4	1	119810-35401	PIPE ASSY, OIL INLET	1							
8	1	26106-080352	BOLT, M8X 35 PLATED	2							
9	1	119802-35100	BRACKET ASSY, FILTER	1							
11	2	129100-35140	BOLT, STUD	1							
12	1	129150-35111	GASKET	1							
13	1	129150-35153	FILTER ASSY, D80X80L	1							1
14	1	26106-080202	BOLT, M8X 20 PLATED	3							
15	1	114250-39450	SWITCH, HYDRAULIC	1							
16	1	124160-39140	BOLT, PIPE JOINT M10	1							
17	1	119802-39450	PIPE ASSY, OIL	1							
18	1	129005-59830	BOLT ASSY, JOINT M8	1							
19	2	22190-080002	WASHER, SEAL 8	1							
20	2	23857-030000	BOLT, JOINT 3	1							
21	1	22190-080002	WASHER, SEAL 8	1							
22	1	22190-100002	WASHER, SEAL 10	2							
23	1	26366-060002	NUT, M6	1							
24	1	119940-35800	SUMP, OIL	1							

N:Old ←Yes/No→ New. Q:Old ←No/Yes→ New. R:Old ←Yes/Yes→ New. S:Old ←No/No→ New. W:Add. Z:Discontinued. F:Interchangeable by set. K:Q'ty Change

Copyright (C) 2015 YANMAR GLOBAL CS CO., LTD. All RightsReserved.

Fig.10. COOLING WATER SYSTEM

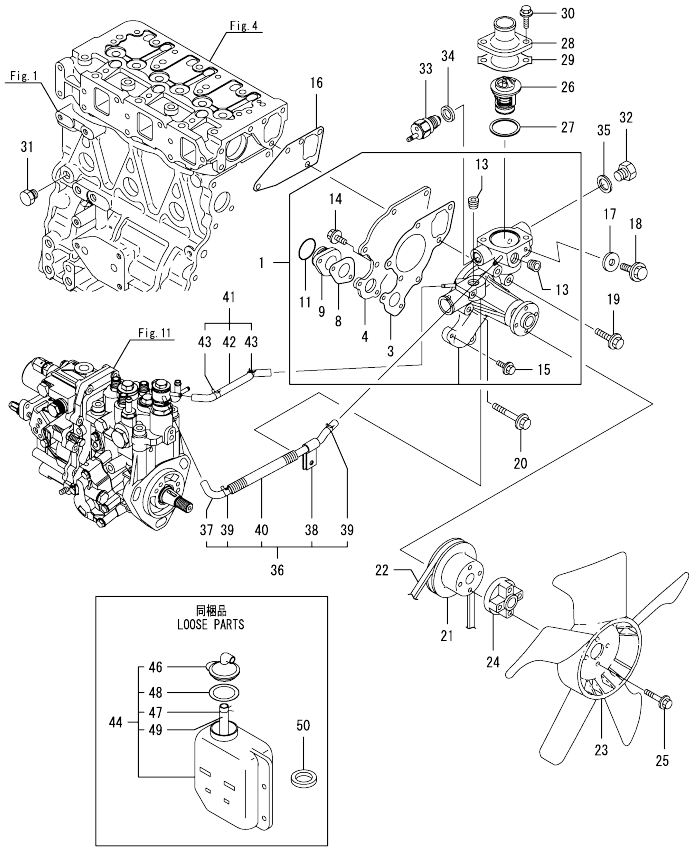

(A)=3TNV82A-QYB (D)=
(B)= (E)=
(C)= (F)=

No.	Lev.	Parts No.	Description	Q'ty (A)	(B)	(C)	(D)	(E)	(F)	I	R
1	1	119802-42001	PUMP ASSY, WATER	1							
3	2	119810-42051	GASKET, WATER PUMP	1							
4	2	119810-42120	PLATE, PUMP	1							
8	2	119810-42281	GASKET, WATER PUMP	1							
9	2	119810-42290	PIPE, PUNP	1							
11	2	129054-42320	O-RING	1							
13	2	23876-030000	PLUG, R03	2							
14	2	26106-060142	BOLT, M6X 14 PLATED	2							
15	2	26106-060202	BOLT, M6X 20 PLATED	2							
16	1	129486-42050	GASKET, WATER PUMP	1							
17	1	23414-080000	GASKET, 8X1.0	1							
18	1	26106-080122	BOLT, M8X 12 PLATED	1							
19	1	26106-080352	BOLT, M8X 35 PLATED	1							
20	1	26106-080552	BOLT, M8X 55 PLATED	3							
21	1	129556-42350	V-PULLEY, 96	1							
22	1	129612-42330	V-BELT, A37.5	1							
23	1	119265-44740	FAN, D=310X5F	1							
24	1	171353-44760	SPACER, FAN	1							
25	1	26106-060402	BOLT, M6X 40 PLATED	4							
26	1	129155-49801	THERMOSTAT, 71C	1							
27	1	129150-49811	GASKET, THERMOSTAT	1							
28	1	129350-49530	COVER, THERMOSTAT	1							
29	1	129795-49551	GASKET	1							
30	1	26106-080222	BOLT, M8X 22 PLATED	2							
31	1	171056-49120	PLUG, DRAIN R1/4	1							
32	1	121450-42450	PLUG, M16	1							
33	1	121250-44901	SWITCH, THERMO 110	1							
34	1	124465-44950	GASKET, 16	1							
35	1	124465-44950	GASKET, 16	1							
36	1	119802-49610	HOSE ASSY, WATER	1							
37	2	119802-49711	HOSE ASSY, WATER	1							
38	2	119802-49730	RETAINER, PIPE	1							
39	2	124722-59050	CLAMP, HOSE 9	2							
40	2	119802-59320	TUBE, CORRUGATED	1							
41	1	119802-49620	HOSE ASSY, WATER	1							
42	2	119802-49721	HOSE ASSY, WATER	1							
43	2	124722-59050	CLAMP, HOSE 9	2							
44	1	121468-44520	TANK ASSY, SUB	1							
46	2	121450-44531	CAP	1							
47	2	124450-44560	CLAMP, HOSE	1							
48	2	121470-44581	GASKET	1							
49	2	23065-070130	PIPE, 7X 130	1							
50	1	129150-49360	GASKET	1							

N:Old ←Yes/No→ New. Q:Old ←No/Yes→ New. R:Old ←Yes/Yes→ New. S:Old ←No/No→ New. W:Add. Z:Discontinued. F:Interchangeable by set. K:Q'ty Change

Copyright (C) 2015 YANMAR GLOBAL CS CO., LTD. All RightsReserved.

Fig.11. FUEL INJECTION PUMP

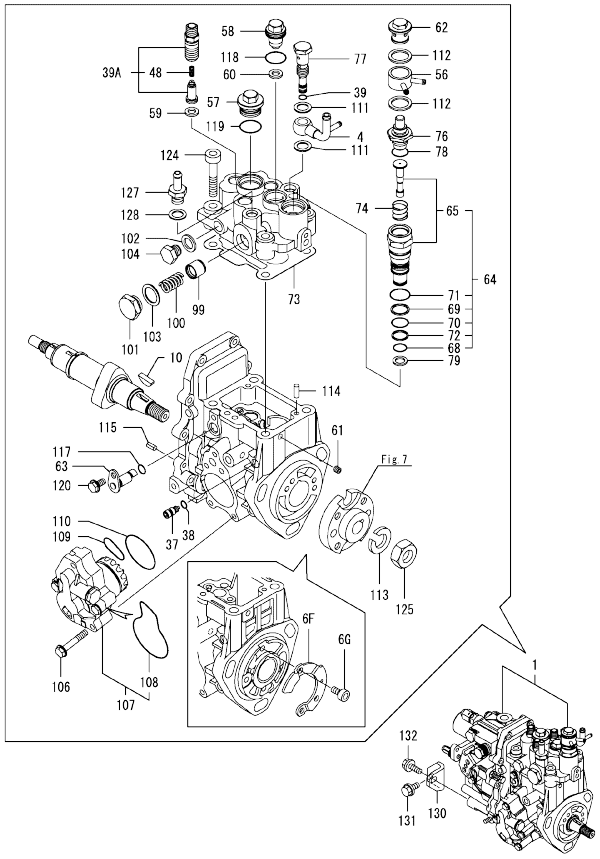

Remarks
(1)Governor(Fig.12) is incorporated in this Fuel Injection Pump(No.1).

(A)=3TNV82A-QYB (D)=
(B)= (E)=
(C)= (F)=

No.	Lev.	Parts No.	Description	Q'ty (A)	(B)	(C)	(D)	(E)	(F)	I	R
1	1	719940-51400	PUMP ASSY, INJECTION	1							1
4	2	158552-51670	JOINT, OVER FLOW	1							
6F	2	129008-51900	COVER, PUMP	1						W	
	(A=E72376)										
6G	2	129008-51920	BOLT, SOCKET M6X10	2						W	
	(A=E72376)										
10	2	119802-51090	FEATHER KEY, 4X16	1							
37	2	158600-51270	STOPPER, TAPPET	1							
38	2	158563-51281	O-RING, 4D S6	1							
39	2	158563-51281	O-RING, 4D S6	1							
39A	2	129509-51390	VALVE ASSY, DELIVERY	3							
48	3	158563-51330	SPRING, DELIVERY	3							
56	2	158553-51551	JOINT, COOLING WATER	1							
57	2	158601-51550	PLUG, M22	1							
58	2	119802-51560	PLUG, M14	1							
59	2	158552-51570	GASKET, PLUG	3							
59-1	2	158552-51571	GASKET, PLUG	3						R	
	(A=E61546)										
60	2	158552-51570	GASKET, PLUG	1							
60-1	2	158552-51571	GASKET, PLUG	1						R	
	(A=E61546)										
61	2	158557-51570	PLUG, RACK	1							
62	2	158601-51570	PLUG	1							
63	2	158552-51580	LIFTER, LINK	1							
64	2	119802-51590	TIMER ASSY	1							
65	3	119802-51600	TIMER ASSY	1							
68	3	158553-51670	O-RING	1							
69	3	119802-51680	RING, BACKUP	1							
70	3	119802-51690	O-RING	1							
71	3	24356-190200	O-RING, 4D19020	1							
72	3	24372-000150	RING, BACK UP T2P15	1							
73	2	158552-51600	GASKET	1							
74	2	158553-51630	SPRING, TIMER	1							
76	2	158553-51640	THERMOELEMENT	1							
77	2	158601-51650	JOINT, OVER FLOW	1							
78	2	158553-51660	O-RING, P14	1							
79	2	158553-51680	GASKET, TIMER	1							
99	2	158601-51770	PISTON, ACCUMLATOR	1							
100	2	158552-51781	SPRING, ACCUMULATOR	1							
101	2	158601-51790	PLUG	1							
102	2	22190-120002	WASHER, SEAL 12	1							
103	2	22190-180002	WASHER, SEAL 18	1							
104	2	23887-120002	PLUG, 12	1							
104-1	2	158553-51930	PLUG, M12	1						R	
	(A=E69722)										
106	2	158553-51770	BOLT	4							
107	2	158552-52100	PUMP ASSY, FUEL FEED	1							
108	3	158552-52500	O-RING	1							
109	2	158552-52310	O-RING	1							
109-1	2	158552-52311	O-RING	1						R	
	(A=E73509)										

N:Old ←Yes/No→ New. Q:Old ←No/Yes→ New, R:Old ←Yes/Yes→ New, S:Old ←No/No→ New. W:Add. Z:Discontinued. F:Interchangeable by set. K:Q'ty Change

++ CONTINUE ++

Copyright (C) 2015 YANMAR GLOBAL CS CO., LTD. All RightsReserved.

Fig.11. FUEL INJECTION PUMP

(A)=3TNV82A-QYB
(B)=
(C)=
(D)=
(E)=
(F)=

No.	Lev.	Parts No.	Description	Q'ty (A)	(B)	(C)	(D)	(E)	(F)	I	R
110	2	158552-52400	O-RING, 4E S42	1							
111	2	22190-120002	WASHER, SEAL 12	2							
112	2	22190-180002	WASHER, SEAL 18	2							
113	2	22217-140000	WASHER, SPRING 14	1							
114	2	22312-050140	PIN, PARALLEL 5X14	2							
115	2	22351-050010	PIN, SPRING 5.0X10	2							
117	2	24311-000070	O-RING, 1AP7.0	1							
118	2	24356-190180	O-RING, 4D19018	1							
119	2	24356-190200	O-RING, 4D19020	1							
120	2	26106-060102	BOLT, M6X 10 PLATED	1							
124	2	26450-080452	BOLT, M8X 45	4							
125	2	26776-140002	NUT, LOCK M14	1							
127	2	119934-59910	JOINT, PIPE	1							
128	2	22190-120002	WASHER, SEAL 12	1							
130	1	119802-51250	RETAINER, PUMP	1							
131	1	26106-080162	BOLT, M8X 16 PLATED	1							
132	1	26106-080202	BOLT, M8X 20 PLATED	1							

Remarks
(1)Governor(Fig.12) is incorporated in this Fuel Injection Pump(No.1).

N:Old ←Yes/No→ New. Q:Old ←No/Yes→ New. R:Old ←Yes/Yes→ New. S:Old ←No/No→ New. W:Add. Z:Discontinued. F:Interchangeable by set. K:Q'ty Change

Copyright (C) 2015 YANMAR GLOBAL CS CO., LTD. All RightsReserved.

Fig.12. GOVERNOR

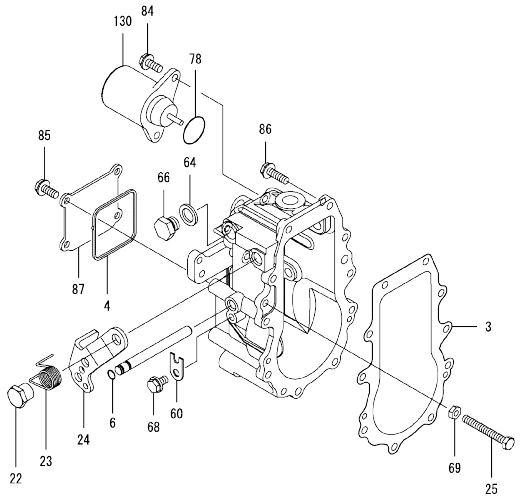

(A)=3TNV82A-QYB (D)=
(B)= (E)=
(C)= (F)=

No.	Lev.	Parts No.	Description	Q'ty (A)	(B)	(C)	(D)	(E)	(F)	I	R
3	2	158553-61050	GASKET	1							
4	2	158553-61070	GASKET	1							
6	2	129155-51280	O-RING, S6	1							
22	2	129255-61410	NUT, M8	1							
23	2	119807-61420	SPRING, RETURN	1							
24	2	158552-61441	LEVER, REGULATOR	1							
25	2	129155-61460	BOLT, LIMITING	1							
60	2	119660-61901	STOPPER, SHAFT	1							
64	2	22190-120002	WASHER, SEAL 12	1							
66	2	23887-120002	PLUG, 12	1							
66-1	2	158553-51930	PLUG, M12	1							R
	(A=E69722)										
68	2	26106-060102	BOLT, M6X 10 PLATED	1							
69	2	26756-060002	NUT, LOCK M6	1							
78	2	158552-61900	O-RING	1							
84	2	26106-060142	BOLT, M6X 14 PLATED	2							
85	2	26106-060142	BOLT, M6X 14 PLATED	4							
86	2	26106-060202	BOLT, M6X 20 PLATED	10							
87	2	129642-61060	COVER, GOVERNOR CASE	1							
130	2	119233-77932	SOLENOID, STOP	1							

Remarks
* This figure(Governor) is incorporated in the Fuel Injection Pump(Fig.11).

N:Old ←Yes/No→ New. Q:Old ←No/Yes→ New. R:Old ←Yes/Yes→ New. S:Old ←No/No→ New. W:Add. Z:Discontinued. F:Interchangeable by set. K:Q'ty Change

Copyright (C) 2015 YANMAR GLOBAL CS CO., LTD. All RightsReserved.

Fig.13. FUEL INJECTION VALVE

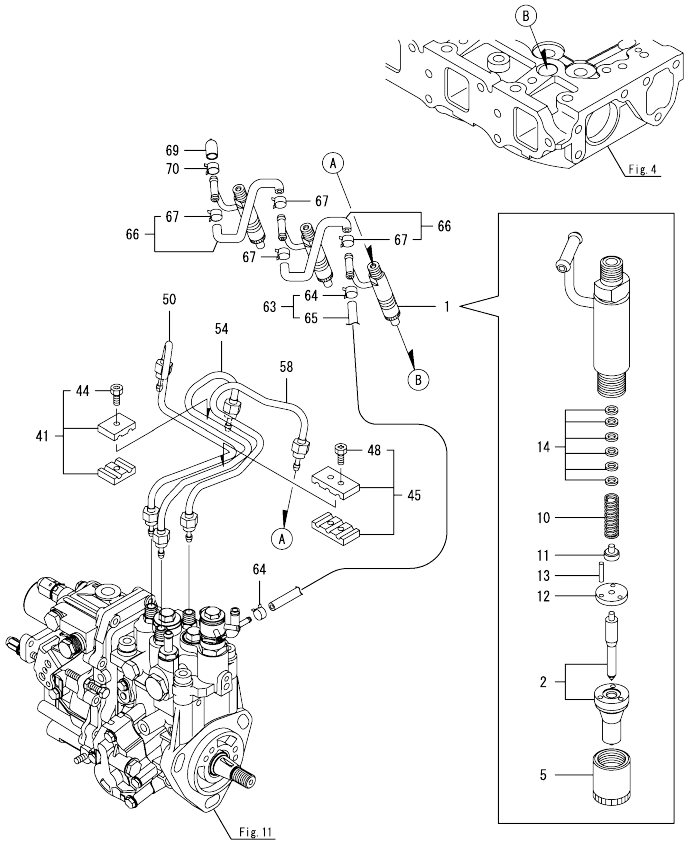

(A)=3TNV82A-QYB (D)=
(B)= (E)=
(C)= (F)=

No.	Lev.	Parts No.	Description	Q'ty (A)	(B)	(C)	(D)	(E)	(F)	I	R
1	1	729240-53200	FUEL INJECTOR ASSY	3							
2	2	129240-53001	NOZZLE ASSY, F.I.	3							
5	2	114250-53080	NUT, NOZZLE	3							
10	2	114250-53120	SPRING, NOZZLE	3							
11	2	114250-53130	SEAT, SPRING	3							
12	2	114250-53140	SPACER	3							
13	2	114250-53210	PIN	6							
14	2	119803-53400	SHIM SET	3							
41	1	119305-59120	RETAINER, PIPE	1							
44	2	129150-59131	BOLT, M4X14	1							
45	1	129150-59120	RETAINER, PIPE	1							
48	2	129150-59131	BOLT, M4X14	2							
50	1	119802-59810	PIPE ASSY, INJECTION	1							
54	1	119802-59820	PIPE ASSY, INJECTION	1							
58	1	119802-59830	PIPE ASSY, INJECTION	1							
63	1	119802-59550	HOSE ASSY, RETURN	1							
64	2	124722-59050	CLAMP, HOSE 9	2							
65	2	119802-59560	HOSE, FUEL RETURN	1							
66	1	129486-59551	HOSE ASSY, RETURN	2							
67	2	124722-59050	CLAMP, HOSE 9	4							
69	1	119593-59581	CAP	1							
70	1	124060-77680	CLAMP, HOSE 10	1							

N:Old ←Yes/No→ New. Q:Old ←No/Yes→ New. R:Old ←Yes/Yes→ New. S:Old ←No/No→ New. W:Add. Z:Discontinued. F:Interchangeable by set. K:Q'ty Change

Copyright (C) 2015 YANMAR GLOBAL CS CO., LTD. All RightsReserved.

Fig.14. FUEL PIPE

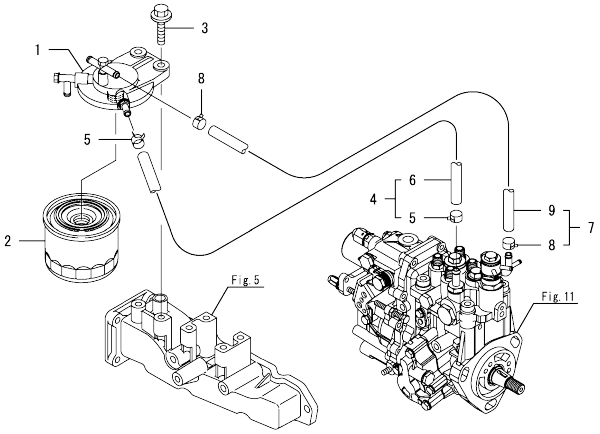

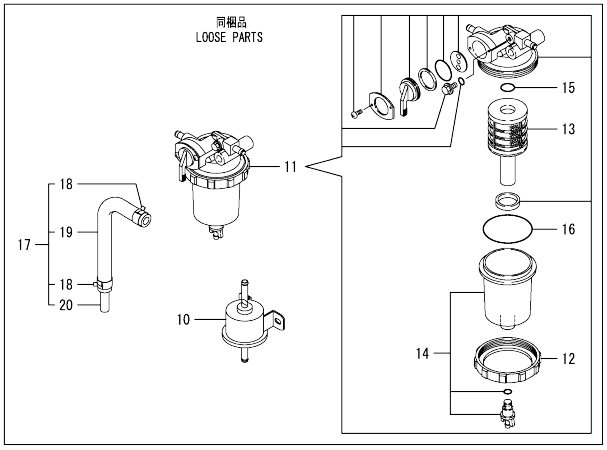

(A)=3TNV82A-QYB (D)=
(B)= (E)=
(C)= (F)=

No.	Lev.	Parts No.	Description	Q'ty (A)	(B)	(C)	(D)	(E)	(F)	I	R
1	1	129004-55612	BRACKET, FILTER	1							
2	1	119802-55801	FILTER, FUEL	1							
3	1	26106-080302	BOLT, M8X 30 PLATED	2							
4	1	129210-59100	HOSE ASSY, FUEL	1							
5	2	124766-59050	CLAMP, HOSE 11.5	2							
6	2	105025-59580	HOSE, FUEL	1							
7	1	129210-59230	HOSE ASSY, FUEL	1							
8	2	124766-59050	CLAMP, HOSE 11.5	2							
9	2	129555-59511	HOSE, FUEL	1							
10	1	129612-52100	PUMP, FUEL FEED	1							
11	1	119802-55700	SEPARATOR ASSY,WATER	1							
12	2	129100-55690	RING, CUP RETAINING	1							
13	2	119802-55710	ELEMENT	1							
14	2	119802-55730	CUP ASSY, SEPARATOR	1							
15	2	24311-000160	O-RING, 1AP16.0	1							
16	2	24321-000650	O-RING, 1AG65.0	1							
17	1	119840-59601	BEND	1							
18	2	124766-59050	CLAMP, HOSE 11.5	2							
19	2	119840-59611	BEND	1							
20	2	119840-59621	JOINT	1							

N:Old $\frac{\text{Yes}}{\text{No}}$ New. Q:Old $\frac{\text{No}}{\text{Yes}}$ New. R:Old $\frac{\text{Yes}}{\text{Yes}}$ New. S:Old $\frac{\text{No}}{\text{No}}$ New. W:Add. Z:Discontinued. F:Interchangeable by set. K:Q'ty Change

Copyright (C) 2015 YANMAR GLOBAL CS CO., LTD. All RightsReserved.

Fig.15. STARTER MOTOR

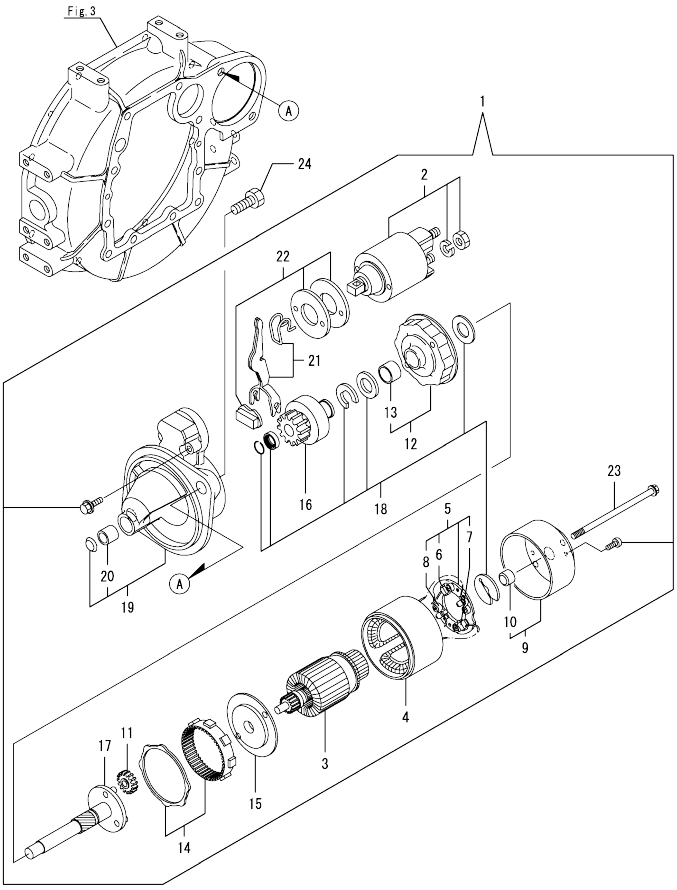

(A)=3TNV82A-QYB
(B)=
(C)=
(D)=
(E)=
(F)=

No.	Lev.	Parts No.	Description	Q'ty (A)	(B)	(C)	(D)	(E)	(F)	I	R
1	1	129242-77010	STARTER ASSY	1							
2	2	129698-77020	SWITCH ASSY, MAGNET	1							
3	2	129242-77100	ARMATURE ASSY	1							
4	2	129242-77110	YOKE ASSY	1							
5	2	129242-77120	HOLDER ASSY, BRUSH	1							
6	3	129242-77130	BRUSH	2							
7	3	129242-77140	BRUSH SET	1							
8	3	129242-77150	SPRING, BRUSH	4							
9	2	129242-77160	COVER ASSY	1							
10	3	129242-77170	BEARING, COVER	1							
11	2	118400-77170	GEAR, PLANETARY	3							
12	2	129242-77180	BRACKET, CENTER	1							
13	3	129698-77190	BRACKET, CENTER	1							
14	2	129698-77200	GEAR, INTERNAL	1							
15	2	129242-77210	BRACKET, CENTER	1							
16	2	129698-77220	PINION ASSY	1							
17	2	129698-77230	SHAFT, PINION	1							
18	2	129698-77250	WASHER SET	1							
19	2	129242-77260	CASE ASSY, GEAR	1							
20	3	X2114535200	BEARING, STARTER	1							
21	2	129242-77270	LEVER SET	1							
22	2	129242-77280	COVER KIT, DUST	1							
23	2	124195-77770	BOLT, THROUGH	2							
24	1	26116-120252	BOLT, M12X 25 PLATED	2							
24-1	1	26106-120252	BOLT, M12X 25 PLATED	2							R
	(A=E82302)										

N:Old ←Yes/No→ New. Q:Old ←No/Yes→ New. R:Old ←Yes/Yes→ New. S:Old ←No/No→ New. W:Add. Z:Discontinued. F:Interchangeable by set. K:Q'ty Change

Copyright (C) 2015 YANMAR GLOBAL CS CO., LTD. All RightsReserved.

Fig.16. GENERATOR

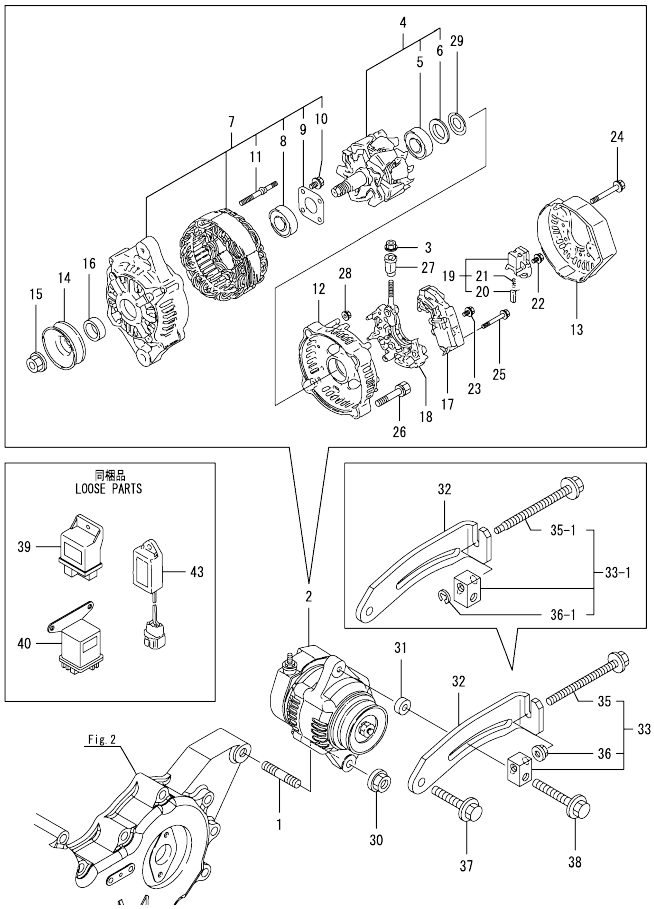

(A)=3TNV82A-QYB (D)=
(B)= (E)=
(C)= (F)=

No.	Lev.	Parts No.	Description	Q'ty (A)	(B)	(C)	(D)	(E)	(F)	I	R
1	1	129795-01900	BOLT, STUD M10X33	1							
2	1	129423-77200	GENERATOR ASSY, 40A	1							
3	2	X9490561001	NUT	1							
4	2	119620-77380	ROTOR ASSY	1							
5	3	123501-79240	BEARING, BALL	1							
6	3	119620-79250	COVER, BEARING	1							
7	2	119620-77421	FRAME ASSY,GENERATOR	1							
8	3	119620-79200	BEARING, BALL	1							
9	3	119620-79210	RETAINER	1							
10	3	119620-79220	SCREW	4							
11	3	119620-79230	BOLT, STUD	2							
12	2	119620-77440	FRAME ASSY	1							
13	2	129240-79300	COVER	1							
14	2	119620-77461	PULLEY, GENERATOR	1							
15	2	119620-77471	NUT	1							
16	2	119620-77490	COLLAR	1							
17	2	129423-77710	REGULATOR ASSY	1							
18	2	119620-79260	HOLDER	1							
19	2	129052-79270	HOLDER, BRUSH	1							
20	3	119620-77480	BRUSH	2							
21	3	119620-79280	SPRING	2							
22	2	119620-79290	SCREW	6							
23	2	119620-79300	SCREW	1							
24	2	119620-79310	BOLT	3							
25	2	119620-79320	SCREW	2							
26	2	119620-79330	BOLT	2							
27	2	119620-79340	BUSH, INSULATION	1							
28	2	119620-79350	NUT	2							
29	2	119620-79360	WASHER, THRUST	1							
30	1	26306-100002	NUT, M10	1							
31	1	119940-77270	SPACER	1							
32	1	119940-77300	ADJUSTER	1							
33	1	119624-77351	BLOCK ASSY, ADJUSTER	1							
33-1	1	129630-77350	BLOCK ASSY, ADJUSTER	1							N
		(A=E72376)									
35	2	26106-081004	BOLT, M8X100 PLATED	1							
35-1	2	129630-77380	BOLT, M8X100	1							S
		(A=E72376)									
36	2	26306-080002	NUT, M8	1							
36-1	2	22272-000050	RING, E- 5	1							S
		(A=E72376)									
37	1	26106-080452	BOLT, M8X 45 PLATED	1							
38	1	26106-080552	BOLT, M8X 55 PLATED	1							
39	1	119802-77200	RELAY, SAFETY	1							
40	1	119650-77910	RELAY ASSY, GLOW	1							
40-1	1	119650-77911	RELAY ASSY, GLOW	1							N
		(A=E86202)									
43	1	129211-77920	TIMER	1							

N:Old ←Yes/No→ New. Q:Old ←No/Yes→ New. R:Old ←Yes/Yes→ New. S:Old ←No/No→ New. W:Add. Z:Discontinued. F:Interchangeable by set. K:Q'ty Change

Copyright (C) 2015 YANMAR GLOBAL CS CO., LTD. All RightsReserved.

Fig.17. GASKET SET

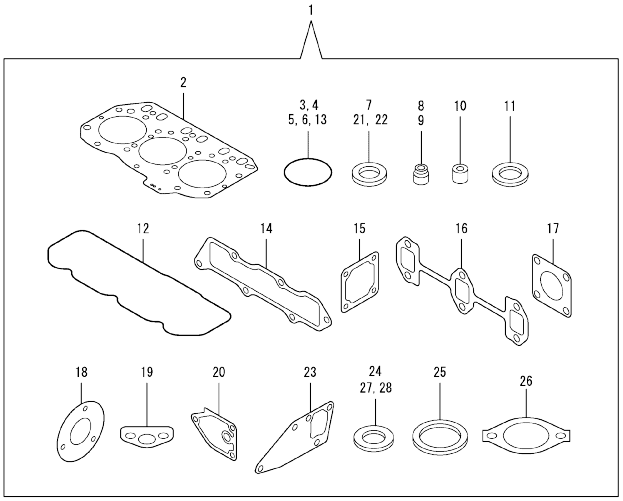

(A)=3TNV82A-QYB
(B)=
(C)=
(D)=
(E)=
(F)=

No.	Lev.	Parts No.	Description	Q'ty (A)	(B)	(C)	(D)	(E)	(F)	I	R
1	1	719802-92650	GASKET SET	1							1
2	2	119812-01330	GASKET, HEAD	1							
3	2	119609-32040	O-RING, P16	4							
4	2	121850-51960	O-RING	1							
5	2	24311-000320	O-RING, 1AP32.0	2							
6	2	24341-000240	O-RING, 1AS24.0	1							
7	2	22190-220002	WASHER, SEAL 22	1							
8	2	119803-11340	SEAL, VALVE STEM	3							
9	2	124160-11340	SEAL, VALVE STEM	3							
10	2	119802-11870	PROTECTOR, NOZZLE	3							
11	2	119625-11880	SEAT, NOZZLE	3							
12	2	119802-11310	GASKET, BONNET	1							
13	2	24311-000120	O-RING, 1AP12.0	3							
14	2	119813-12110	GASKET, MANIFOLD	1							
15	2	129150-77511	GASKET, AIR HEATER	1							
16	2	119810-13110	GASKET, EXH.MANIFOLD	1							
17	2	124701-11911	GASKET, SILENCER	1							
18	2	103954-13201	GASKET, SILENCER	1							
19	2	129150-35042	GASKET	1							
20	2	129150-35111	GASKET	1							
21	2	22190-080002	WASHER, SEAL 8	2							
22	2	22190-100002	WASHER, SEAL 10	2							
23	2	129486-42050	GASKET, WATER PUMP	1							
24	2	23414-080000	GASKET, 8X1.0	1							
25	2	129150-49811	GASKET, THERMOSTAT	1							
26	2	129795-49551	GASKET	1							
27	2	124465-44950	GASKET, 16	2							
28	2	129150-49360	GASKET	1							

Remarks
(1)Optional parts.

N:Old $\frac{\text{Yes}}{\text{No}}$ New. Q:Old $\frac{\text{No}}{\text{Yes}}$ New. R:Old $\frac{\text{Yes}}{\text{Yes}}$ New. S:Old $\frac{\text{No}}{\text{No}}$ New. W:Add. Z:Discontinued. F:Interchangeable by set. K:Q'ty Change

Copyright (C) 2015 YANMAR GLOBAL CS CO., LTD. All RightsReserved.

Parts No. Index

Parts No.	Fig. No.	Ref. No.
103954-13201	6	8
	17	18
104211-11180	4	24
104211-11370	4	14
105025-59580	14	6
114250-39450	9	15
114250-53080	13	5
114250-53120	13	10
114250-53130	13	11
114250-53140	13	12
114250-53210	13	13
118400-77170	15	11
119131-18320	6	5
119233-77932	12	130
119265-44740	10	23
119305-59120	13	41
119593-59581	13	69
119609-32040	2	11
	17	3
119620-01750	3	3
119620-02020	1	9
119620-77380	16	4
119620-77421	16	7
119620-77440	16	12
119620-77461	16	14
119620-77471	16	15
119620-77480	16	20
119620-77490	16	16
119620-79200	16	8
119620-79210	16	9
119620-79220	16	10
119620-79230	16	11
119620-79250	16	6
119620-79260	16	18
119620-79280	16	21
119620-79290	16	22
119620-79300	16	23
119620-79310	16	24
119620-79320	16	25
119620-79330	16	26
119620-79340	16	27
119620-79350	16	28
119620-79360	16	29
119624-77351	16	33
119625-11880	4	32
	17	11
119640-01640	3	8
119640-34800	9	1
119650-77910	16	40
119650-77911	16	40 -1

Parts No.	Fig. No.	Ref. No.
119660-61901	12	60
119717-02930	1	15
119802-01190	1	27
119802-01520	2	6
119802-01561	2	7
119802-03010	4	41
119802-03080	5	1
119802-03110	4	43
119802-03121	4	44
119802-03130	4	45
119802-03141	4	46
119802-11100	4	21
119802-11110	4	22
119802-11241	4	3
119802-11251	4	4
119802-11260	4	6
119802-11270	4	7
119802-11280	4	8
119802-11310	4	48
	17	12
119802-11350	4	40
119802-11650	4	10
119802-11700	4	15
119802-11810	4	30
119802-11870	4	31
	17	10
119802-11900	4	33
119802-12100	5	3
119802-13640	6	3
119802-13641	6	3 -1
119802-13740	6	4
119802-14580	7	3
119802-21002	8	1
119802-21202	8	4
119802-21650	8	8
119802-22080	8	15
119802-22500	8	17
119802-22900	8	32
119802-22950	8	34
119802-25051	7	9
119802-25071	7	13
119802-25101	7	10
119802-25901	7	16
119802-32070	2	13
119802-32100	2	12
119802-32111	2	17
119802-32120	2	18
119802-32130	2	19
119802-35100	9	9
119802-39450	9	17

Parts No.	Fig. No.	Ref. No.
119802-42001	10	1
119802-49610	10	36
119802-49620	10	41
119802-49711	10	37
119802-49721	10	42
119802-49730	10	38
119802-51090	11	10
119802-51250	11	130
119802-51560	11	58
119802-51590	11	64
119802-51600	11	65
119802-51680	11	69
119802-51690	11	70
119802-55700	14	11
119802-55710	14	13
119802-55730	14	14
119802-55801	14	2
119802-59320	10	40
119802-59550	13	63
119802-59560	13	65
119802-59810	13	50
119802-59820	13	54
119802-59830	13	58
119802-77200	16	39
119803-11340	4	25
	17	8
119803-53400	13	14
119807-61420	12	23
119810-01200	1	28
119810-01730	3	6
119810-01790	3	7
119810-02871	1	33
119810-02941	1	36
119810-11120	4	23
119810-13100	6	1
119810-13110	6	2
	17	16
119810-14400	7	2
119810-23200	8	26
119810-23601	8	27
119810-23611	8	30
119810-23910	8	29
119810-35401	9	4
119810-42051	10	3
119810-42120	10	4
119810-42281	10	8
119810-42290	10	9
119812-01330	1	29
	17	2
119813-12110	5	4

Parts No.	Fig. No.	Ref. No.
119813-12110	17	14
119813-22300	8	21
119840-59601	14	17
119840-59611	14	19
119840-59621	14	20
119865-21600	8	14
119934-01800	2	5
119934-59910	11	127
119940-35800	9	24
119940-77270	16	31
119940-77300	16	32
120270-54410	4	34
121023-01551	2	27
121111-21501	8	11
121250-44901	10	33
121450-42450	10	32
121450-44531	10	46
121468-44520	10	44
121470-44581	10	48
121520-34810	9	2
121850-21680	8	10
121850-51960	2	20
	17	4
123501-79240	16	5
124060-01050	1	4
124060-11800	4	29
124060-77680	13	70
124160-01751	2	8
	4	39
124160-01910	1	6
		7
124160-11340	4	26
	17	9
124160-11360	4	51
124160-39140	9	16
124195-77770	15	23
124240-01871	2	9
124450-44560	10	47
124465-44950	10	34
		35
	17	27
124701-11911	6	7
	17	17
124722-59050	10	39
		43
	13	64
		67
124766-59050	14	5
		8
		18

Parts No. Index

Parts No.	Fig. No.	Ref. No.
129001-01250	1	5
129001-32330	2	16
129001-91841	2	21
129004-55612	14	1
129005-59830	9	18
129008-51900	11	6 F
129008-51920	11	6 G
129052-79270	16	19
129054-42320	10	11
129100-01580	3	1
		13
	8	2
129100-01640	3	14
129100-35140	9	11
129100-55690	14	12
129120-77502	5	7
129150-02450	7	4
129150-03070	4	42
129150-11230	4	11
129150-11280	4	9
129150-11750	4	13
129150-14101	7	6
129150-14200	7	1
129150-25301	7	15
129150-35042	9	3
	17	19
129150-35111	9	12
	17	20
129150-35153	9	13
129150-49360	10	50
	17	28
129150-49811	10	27
	17	25
129150-59120	13	45
129150-59131	13	44
		48
129150-77511	5	8
	17	15
129155-49801	10	26
129155-51280	12	6
129155-61460	12	25
129210-59100	14	4
129210-59230	14	7
129211-77920	16	43
129240-53001	13	2
129240-79300	16	13
129242-77010	15	1
129242-77100	15	3
129242-77110	15	4
129242-77120	15	5

Parts No.	Fig. No.	Ref. No.
129242-77130	15	6
129242-77140	15	7
129242-77150	15	8
129242-77160	15	9
129242-77170	15	10
129242-77180	15	12
129242-77210	15	15
129242-77260	15	19
129242-77270	15	21
129242-77280	15	22
129255-61410	12	22
129350-49530	10	28
129410-03990	5	2
129418-32320	2	15
129423-77200	16	2
129423-77710	16	17
129486-01670	3	17
129486-42050	10	16
	17	23
129486-59551	13	66
129489-21590	8	12
129509-51390	11	39 A
129555-59511	14	9
129556-42350	10	21
129612-01600	3	2
129612-42330	10	22
129612-52100	14	10
129630-77350	16	33 -1
129630-77380	16	35 -1
129642-61060	12	87
129698-77020	15	2
129698-77190	15	13
129698-77200	15	14
129698-77220	15	16
129698-77230	15	17
129698-77250	15	18
129792-22400	8	22
129795-01780	3	16
129795-01900	16	1
129795-01950	2	10
129795-02412	1	12
129795-21661	8	9
129795-49551	10	29
	17	26
129900-07900	4	1
129900-32130	2	14
158552-51151	7	17
158552-51570	11	59
		60
158552-51571	11	59 -1

Parts No.	Fig. No.	Ref. No.
158552-51571	11	60 -1
158552-51580	11	63
158552-51600	11	73
158552-51670	11	4
158552-51781	11	100
158552-52100	11	107
158552-52310	11	109
158552-52311	11	109 -1
158552-52400	11	110
158552-52500	11	108
158552-61441	12	24
158552-61900	12	78
158553-51551	11	56
158553-51630	11	74
158553-51640	11	76
158553-51660	11	78
158553-51670	11	68
158553-51680	11	79
158553-51770	11	106
158553-51930	11	104 -1
	12	66 -1
158553-61050	12	3
158553-61070	12	4
158557-51570	11	61
158563-51281	11	38
		39
158563-51330	11	48
158600-51270	11	37
158601-51550	11	57
158601-51570	11	62
158601-51650	11	77
158601-51770	11	99
158601-51790	11	101
171051-01921	1	8
171056-49120	10	31
171353-44760	10	24
22190-080002	9	19
		21
	17	21
22190-100002	9	22
	17	22
22190-120002	11	102
		111
		128
	12	64
22190-180002	11	103
		112
22190-220002	3	10
	17	7
22217-140000	11	113

Parts No.	Fig. No.	Ref. No.
22272-000050	16	36 -1
22312-050140	11	114
22351-030010	8	7
22351-050010	11	115
22351-060012	4	35
22512-070140	7	7
	8	5
22857-500100	4	49
		50
23065-070130	10	49
23414-080000	10	17
	17	24
23857-030000	9	20
23876-030000	2	3
	10	13
23876-040000	2	4
23887-120002	11	104
	12	66
24311-000070	11	117
24311-000120	4	52
	17	13
24311-000160	14	15
24311-000320	2	22
	4	53
	17	5
24321-000650	14	16
24341-000240	2	28
	17	6
24356-190180	11	118
24356-190200	11	71
		119
24372-000150	11	72
26106-060102	11	120
	12	68
26106-060142	10	14
	12	84
		85
26106-060162	2	29
26106-060202	10	15
	12	86
26106-060402	10	25
26106-080122	10	18
26106-080142	7	8
26106-080162	2	23
		24
	3	11
	4	2
	11	131
26106-080202	5	5
	9	14

Parts No. Index

Parts No.	Fig. No.	Ref. No.
26106-080202	11	132
26106-080222	10	30
26106-080252	4	36
26106-080302	14	3
26106-080352	3	18
	5	9
	9	8
	10	19
26106-080402	7	14
26106-080452	3	12
	4	37
	16	37
26106-080502	4	38
26106-080552	2	25
	10	20
	16	38
26106-080802	5	6
26106-080852	2	21 -1
26106-081004	16	35
26106-120252	15	24 -1
26116-120252	15	24
26206-100252	3	4
26206-100302	3	5
26306-080002	2	26
	6	6
	16	36
26306-100002	16	30
26366-060002	9	23
26450-080452	11	124
26756-060002	12	69
26776-140002	11	125
27241-120000	1	13
27241-300000	1	14
27241-400000	4	20
27310-070001	4	27
719802-01500	2	1
719802-01560	1	1
719802-92650	17	1
719810-02981	1	30
719810-23100	8	23
719940-51400	11	1
729240-53200	13	1
X2114535200	15	20
X9490561001	16	3

Parts No.	Fig. No.	Ref. No.

Parts No.	Fig. No.	Ref. No.

Parts No.	Fig. No.	Ref. No.