YANMAR

PARTS CATALOG

0CW10-M57800EN

Last update Nov., 2018

PREFACE

1. This parts catalog is the 1st edition of 3TNV82A-SSU for SUNWARD.

Pub.No. : 0CW10-G57800
Published : December, 2009

2. Model name

Engine model	Vehicle	Vehicle made by
3TNV82A-SSU	EXCAVATOR	SUNWARD

Contents

0CW10-M57800

Fig. No.	Fig. Name
ENGINE	
1.	CYLINDER BLOCK
2.	GEAR HOUSING
3.	FLYWHEEL HOUSING & OIL SUMP
4.	CYLINDER HEAD & BONNET
5.	SUCTION MANIFOLD & AIR CLEANER
6.	EXHAUST MANIFOLD & SILENCER
7.	CAMSHAFT & DRIVING GEAR
8.	CRANKSHAFT & PISTON
9.	LUB. OIL SYSTEM
10.	COOLING WATER SYSTEM
11.	FUEL INJECTION PUMP
12.	GOVERNOR
13.	FUEL INJECTION VALVE
14.	FUEL PIPING
15.	STARTING MOTOR
16.	GENERATOR
17.	GASKET SET

Fig.1. CYLINDER BLOCK

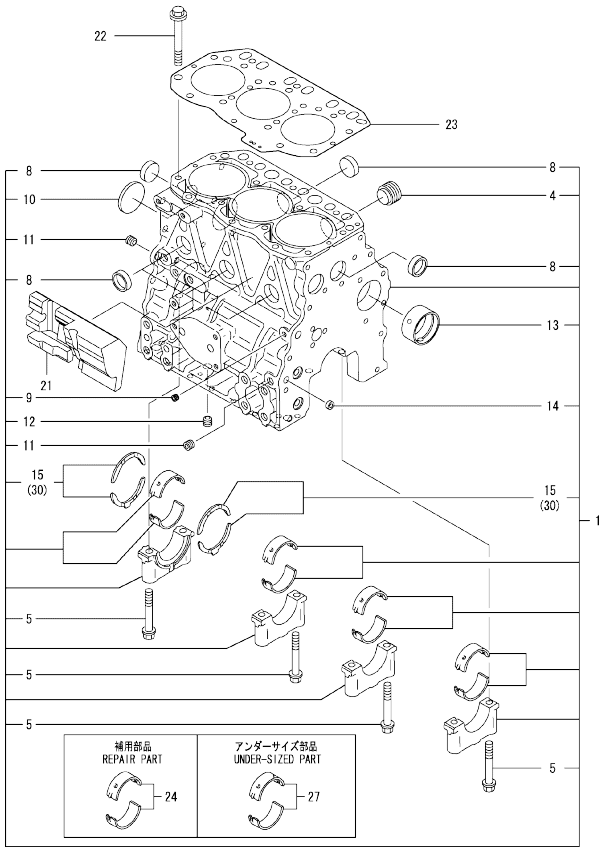

Remarks
(1)Repair parts.
(2)Under-sized(U.S.=0.25) parts.
(3)Over-sized(O.S.=0.25) parts.

(A)=3TNV82A-SSU
(B)=
(C)=
(D)=
(E)=
(F)=

No.	Lev.	Parts No.	Description	Q'ty (A)	(B)	(C)	(D)	(E)	(F)	I	R
1	1	719802-01560	BLOCK ASSY, CYLINDER	1							
4	2	171051-01921	PLUG, NPTF1	1							
5	2	119620-02020	BOLT, METAL CAP	8							
8	2	27241-300000	PLUG 30	6							
9	2	124060-01050	PLUG, PT1/8	1							
10	2	129001-01250	PLUG, 50	1							
11	2	124160-01910	PLUG, PT1/4	2							
12	2	124160-01910	PLUG, PT1/4	1							
13	2	129795-02412	BUSH, CAMSHAFT	1							
14	2	27241-120000	PLUG, 12	2							
15	2	119810-02931	BEARING, THRUST	1							
21	1	119802-01190	SPACER	1							
22	1	119810-01200	BOLT, HEAD	14							
23	1	119812-01330	GASKET, HEAD	1							
24	1	719810-02981	BEARING, MAIN	4							1
27	1	119810-02871	BEARING, 0.25 US	4							2
30	1	119810-02941	BEARING, THRUST 0.25	2							3

N:Old ←Yes/No→ New. Q:Old ←No/Yes→ New, R:Old ←Yes/Yes→ New, S:Old ←No/No→ New, W:Add, Z:Discontinued, F:Interchangeable by set, K:Q'ty Change

Copyright (C) YANMAR CO., LTD. All RightsReserved.

Fig.2. GEAR HOUSING

(A)=3TNV82A-SSU
(B)=
(C)=
(D)=
(E)=
(F)=

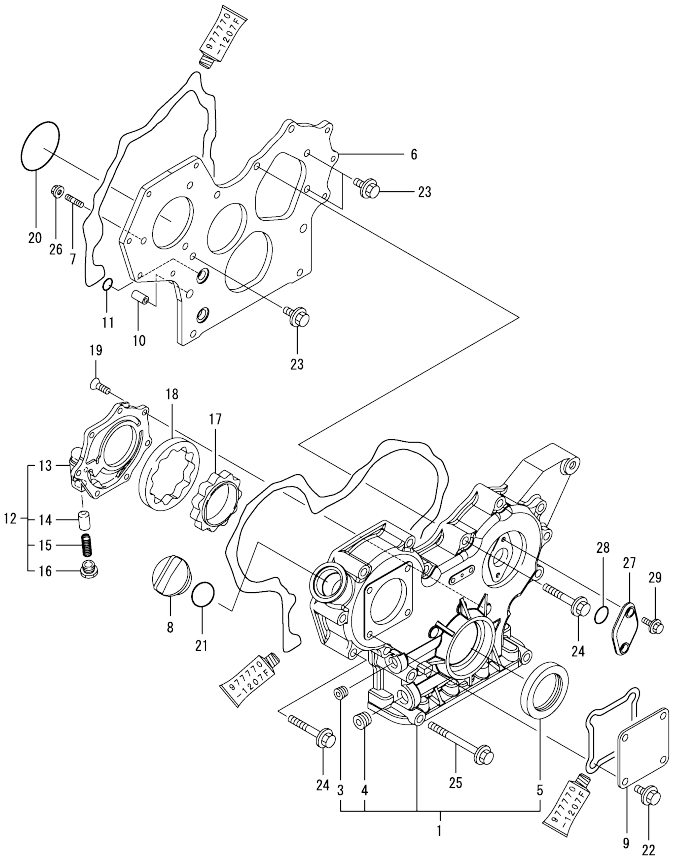

No.	Lev.	Parts No.	Description	Q'ty (A)	(B)	(C)	(D)	(E)	(F)	I	R
1	1	729233-01500	CASE ASSY, GEAR	1							
3	2	23876-030000	PLUG, R03	1							
4	2	23876-040000	PLUG, R04	1							
5	2	119934-01800	SEAL, OIL	1							
6	1	119802-01520	FLANGE, GEAR CASE	1							
7	1	119802-01561	STUD, M8X25	3							
8	1	124160-01751	COVER, FILLER	1							
9	1	124240-01871	COVER	1							
10	1	129795-01950	PIPE, KNOCK L=18	2							
11	1	119609-32040	O-RING, P16	4							
12	1	119802-32100	COVER ASSY	1							
13	2	119802-32070	COVER	1							
14	2	129900-32130	VALVE, RELIEF	1							
15	2	129418-32320	SPRING	1							
16	2	129001-32330	PLUG	1							
17	1	119802-32111	ROTOR, INNER	1							
18	1	119802-32120	ROTOR, OUTER	1							
19	1	119802-32130	SCREW, M6X16	7							
20	1	121850-51960	O-RING	1							
21	1	24311-000320	O-RING, 1AP32.0	1							
22	1	26106-080162	BOLT, M8X 16 PLATED	4							
23	1	26106-080162	BOLT, M8X 16 PLATED	3							
24	1	26106-080552	BOLT, M8X 55 PLATED	12							
25	1	26106-080852	BOLT, M8X 85 PLATED	3							
26	1	26306-080002	NUT, M8	3							
27	1	121023-01551	COVER	1							
28	1	24341-000240	O-RING, 1AS24.0	1							
29	1	26106-060162	BOLT, M6X 16 PLATED	2							

N:Old ←Yes/No→ New. Q:Old ←No/Yes→ New. R:Old ←Yes/Yes→ New. S:Old ←No/No→ New. W:Add. Z:Discontinued. F:Interchangeable by set. K:Q'ty Change

Copyright (C) YANMAR CO., LTD. All RightsReserved.

Fig.3. FLYWHEEL HOUSING & OIL SUMP

(A)=3TNV82A-SSU
(B)=
(C)=
(D)=
(E)=
(F)=

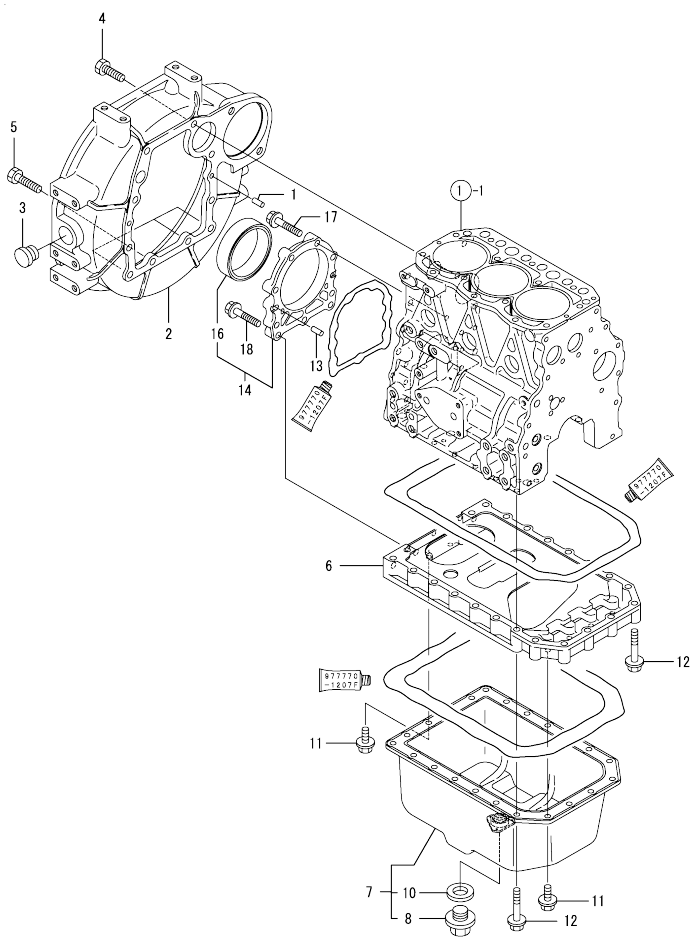

No.	Lev.	Parts No.	Description	Q'ty (A)	(B)	(C)	(D)	(E)	(F)	I	R
1	1	129100-01580	PIN, M8X16	2							
2	1	129612-01600	HOUSING, FLYWHEEL	1							
3	1	119620-01750	CAP	1							
4	1	26206-100252	BOLT, M10X 25 PLATED	6							
5	1	26206-100302	BOLT, M10X 30 PLATED	4							
6	1	119810-01730	SPACER, OIL SUMP	1							
7	1	119823-01770	SUMP ASSY, OIL	1							
8	2	119640-01640	PLUG, DRAIN M22	1							
10	2	22190-220002	WASHER, SEAL 22	1							
11	1	26106-080162	BOLT, M8X 16 PLATED	6							
12	1	26106-080452	BOLT, M8X 45 PLATED	22							
13	1	129100-01580	PIN, M8X16	2							
14	1	129100-01640	CASE ASSY, OIL SEAL	1							
16	2	129795-01780	SEAL, OIL	1							
17	1	129486-01670	BOLT, M8X30	6							
18	1	26106-080352	BOLT, M8X 35 PLATED	3							

N:Old ←Yes/No→ New. Q:Old ←No/Yes→ New. R:Old ←Yes/Yes→ New. S:Old ←No/No→ New. W:Add. Z:Discontinued. F:Interchangeable by set. K:Q'ty Change

Copyright (C) YANMAR CO., LTD. All RightsReserved.

Fig.4. CYLINDER HEAD & BONNET

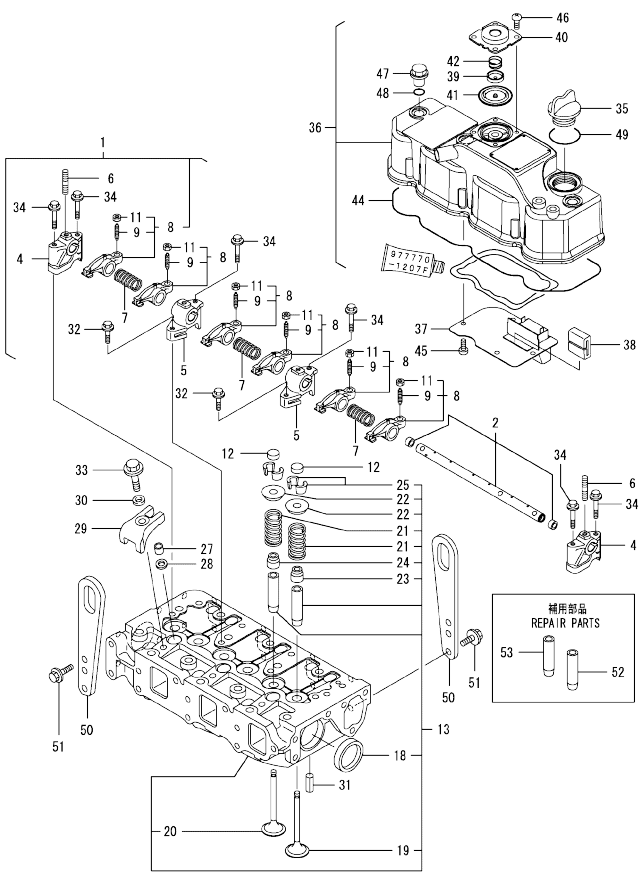

(A)=3TNV82A-SSU
(B)=
(C)=
(D)=
(E)=
(F)=

No.	Lev.	Parts No.	Description	Q'ty (A)	(B)	(C)	(D)	(E)	(F)	I	R
1	1	119802-11241	SHAFT ASSY, ROCKER	1							
2	2	119802-11251	SHAFT, ROCKER ARM	1							
4	2	119802-11260	SUPPORT, ROCKER ARM	2							
5	2	119802-11270	SUPPORT, ROCKER ARM	2							
6	2	119802-11280	STUD	3							
7	2	129150-11280	SPRING	3							
8	2	119802-11650	ARM, ROCKER	6							
9	3	129150-11230	SCREW, VALVE ADJUST	6							
11	3	129150-11750	NUT, M8	6							
12	1	104211-11370	CAP, VALVE	6							
13	1	119802-11700	HEAD ASSY, CYLINDER	1							
13-1	1	119802-11730	HEAD ASSY, CYLINDER	1							N
	(A=EZZZZZ)										
18	2	27241-400000	PLUG, 40	2							
19	2	119802-11100	VALVE, INTAKE	3							
20	2	119802-11110	VALVE, EXHAUST	3							
21	2	119810-11120	SPRING, VALVE	6							
22	2	104211-11180	RETAINER, SPRING	6							
23	2	124160-11340	SEAL, VALVE STEM	3							
24	2	119803-11340	SEAL, VALVE STEM	3							
25	2	27310-070001	COTTER, 7	6							
27	1	119802-11870	PROTECTOR, NOZZLE	3							
28	1	119625-11880	SEAT, NOZZLE	3							
29	1	119802-11900	RETAINER, NOZZLE	3							
30	1	120270-54410	WASHER, INJECTOR	3							
31	1	22351-060012	PIN, SPRING 6.0X12	2							
32	1	26106-080252	BOLT, M8X 25 PLATED	2							
33	1	26106-080452	BOLT, M8X 45 PLATED	3							
34	1	26106-080502	BOLT, M8X 50 PLATED	6							
35	1	124160-01751	COVER, FILLER	1							
36	1	119802-11350	BONNET ASSY, HEAD	1							
37	2	119802-03010	PLATE	1							
38	2	129150-03070	BAFFLE, BREATHER	1							
39	2	119802-03110	PLATE	1							
40	2	119802-03121	COVER, DIAPHRAGM	1							
41	2	119802-03130	DIAPHRAGM	1							
42	2	119802-03141	SPRING, DIAPHRAGM	1							
44	2	119802-11310	GASKET, BONNET	1							
45	2	22857-500100	SCREW, 5X10	4							
46	2	22857-500100	SCREW, 5X10	4							
47	1	124160-11360	KNOB	3							
48	1	24311-000120	O-RING, 1AP12.0	3							
49	1	24311-000320	O-RING, 1AP32.0	1							
50	1	129900-07900	LIFTER	2							
51	1	26106-080162	BOLT, M8X 16 PLATED	4							
52	1	124060-11800	GUIDE, VALVE	3							1
53	1	119802-11810	GUIDE, VALVE	3							1

Remarks
(1)Repair parts.

N:Old ←Yes/No→ New. Q:Old ←No/Yes→ New. R:Old ←Yes/Yes→ New. S:Old ←No/No→ New. W:Add. Z:Discontinued. F:Interchangeable by set. K:Q'ty Change

Copyright (C) YANMAR CO., LTD. All RightsReserved.

Fig.5. SUCTION MANIFOLD & AIR CLEANER

(A)=3TNV82A-SSU
(B)=
(C)=
(D)=
(E)=
(F)=

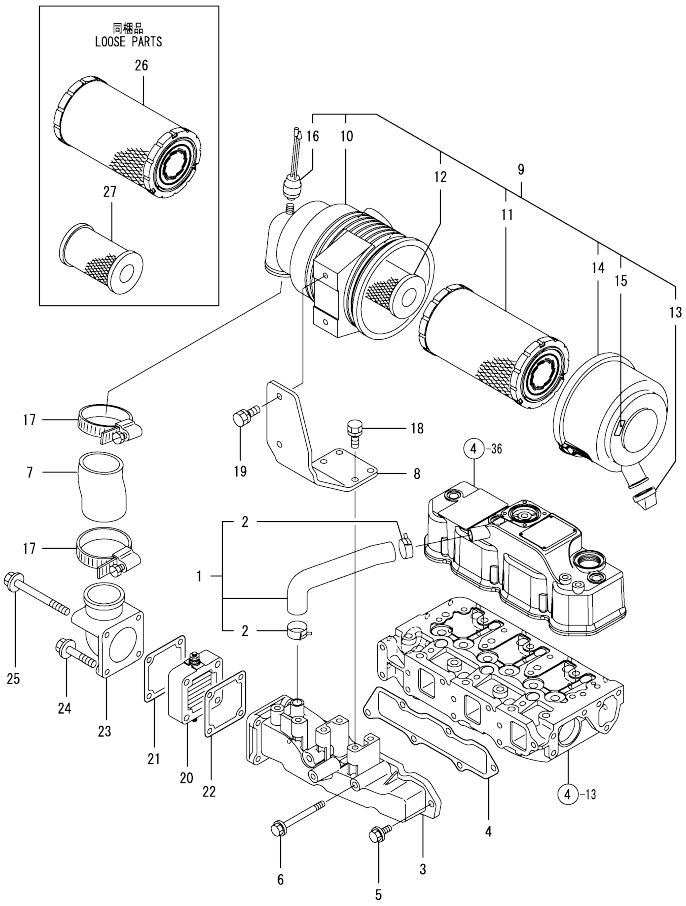

No.	Lev.	Parts No.	Description	Q'ty (A)	(B)	(C)	(D)	(E)	(F)	I	R
1	1	119802-03080	PIPE , BREATHER	1							
2	2	129410-03990	CLIP	2							
3	1	119802-12100	MANIFOLD, AIR INTAKE	1							
4	1	119813-12110	GASKET, MANIFOLD	1							
5	1	26106-080202	BOLT, M8X 20 PLATED	4							
6	1	26106-080802	BOLT, M8X 80 PLATED	2							
7	1	119910-12210	PIPE, AIR INTAKE	1							
8	1	119802-12560	BRACKET, AIR CLEANER	1							
9	1	119910-12610	CLEANER ASSY, AIR	1							
10	2	119910-12510	BODY, AIR CLEANER	1							
11	2	119808-12520	ELEMENT	1							
12	2	129051-12530	ELEMENT	1							
13	2	119808-12540	VALVE, UNLOADER	1							
14	2	119866-12541	COVER ASSY	1							
15	2	129612-12650	LABEL, MARKING	1							
16	2	119140-12680	INDICATOR	1							
17	1	23000-060000	CLAMP, 60	2							
18	1	26013-080222	BOLT, M8X 22	4							
19	1	26013-080222	BOLT, M8X 22	2							
20	1	129100-77501	HEATER	1							
21	1	129100-77510	GASKET	1							
22	1	129150-77511	GASKET	1							
23	1	171340-77520	BEND	1							
24	1	26106-080402	BOLT, M8X 40 PLATED	2							
25	1	26106-080802	BOLT, M8X 80 PLATED	2							
26	1	119808-12520	ELEMENT	1							
27	1	129051-12530	ELEMENT	1							

N:Old ←Yes/No→ New. Q:Old ←No/Yes→ New. R:Old ←Yes/Yes→ New. S:Old ←No/No→ New. W:Add. Z:Discontinued. F:Interchangeable by set. K:Q'ty Change

Copyright (C) YANMAR CO., LTD. All RightsReserved.

Fig.6. EXHAUST MANIFOLD & SILENCER

(A)=3TNV82A-SSU
(B)=
(C)=
(D)=
(E)=
(F)=

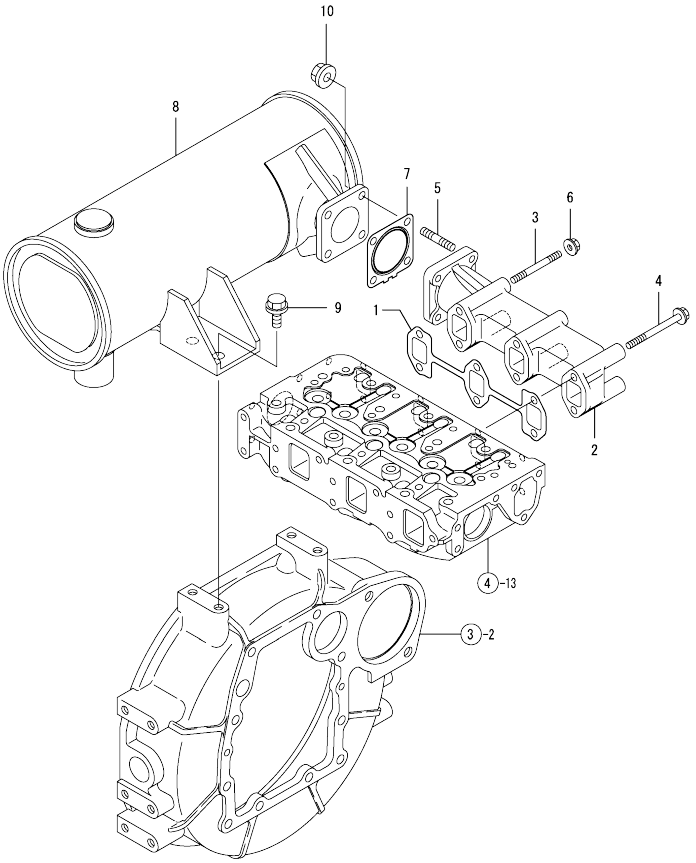

No.	Lev.	Parts No.	Description	Q'ty (A)	(B)	(C)	(D)	(E)	(F)	I	R
1	1	119810-13110	GASKET	1							
2	1	119802-13129	MANIFOLD, EXHAUST	1							
3	1	123900-13610	STUD, M8X80	2							
4	1	123900-13630	BOLT, M8X80	4							
5	1	119131-18320	STUD, M8X22	4							
6	1	26306-080002	NUT, M8	2							
7	1	129004-13200	GASKET, SILENCER	1							
8	1	129240-13550	SILENCER	1							
9	1	26106-100202	BOLT, M10X 20 PLATED	2							
10	1	26306-080002	NUT, M8	4							

N:Old ←Yes/No→ New. Q:Old ←No/Yes→ New. R:Old ←Yes/Yes→ New. S:Old ←No/No→ New. W:Add. Z:Discontinued. F:Interchangeable by set. K:Q'ty Change

Copyright (C) YANMAR CO., LTD. All RightsReserved.

Fig.7. CAMSHAFT & DRIVING GEAR

(A)=3TNV82A-SSU
(B)=
(C)=
(D)=
(E)=
(F)=

No.	Lev.	Parts No.	Description	Q'ty (A)	(B)	(C)	(D)	(E)	(F)	I	R
1	1	129150-14200	TAPPET	6							
2	1	119810-14400	ROD, PUSH	6							
3	1	119802-14580	CAMSHAFT ASSY	1							
4	2	129150-02450	BEARING, THRUST	1							
6	2	129150-14101	GEAR, CAMSHAFT	1							
7	2	22512-070140	KEY, 7X 14	1							
8	1	26106-080142	BOLT, M8X 14 PLATED	2							
9	1	119802-25051	SHAFT, IDLE	1							
10	1	119802-25101	GEAR ASSY, IDLE	1							
13	1	26106-080402	BOLT, M8X 40 PLATED	3							
14	1	119802-25071	BUSH, IDLE GEAR	1							1
15	1	129150-25301	BOLT	4							
16	1	119802-25901	GEAR, PUMP	1							

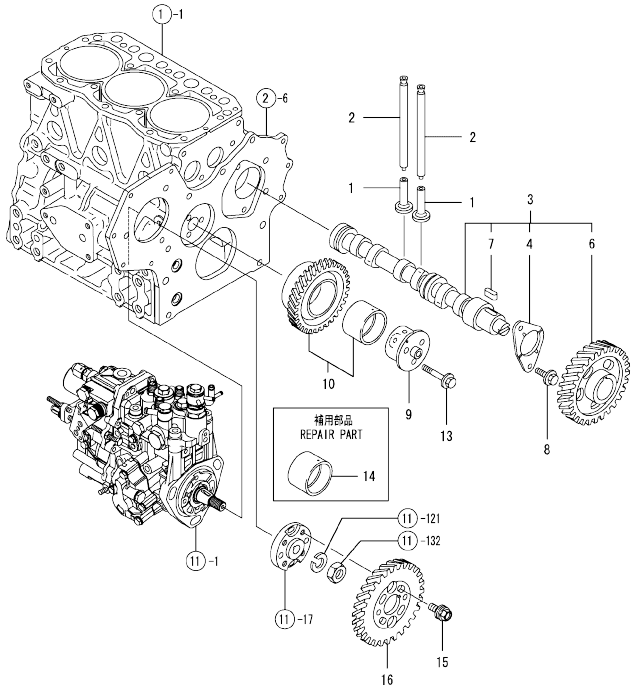

Remarks
(1)Repair parts.

N:Old ←Yes/No→ New. Q:Old ←No/Yes→ New. R:Old ←Yes/Yes→ New. S:Old ←No/No→ New. W:Add. Z:Discontinued. F:Interchangeable by set. K:Q'ty Change

Copyright (C) YANMAR CO., LTD. All RightsReserved.

Fig.8. CRANKSHAFT & PISTON

(A)=3TNV82A-SSU
(B)=
(C)=
(D)=
(E)=
(F)=

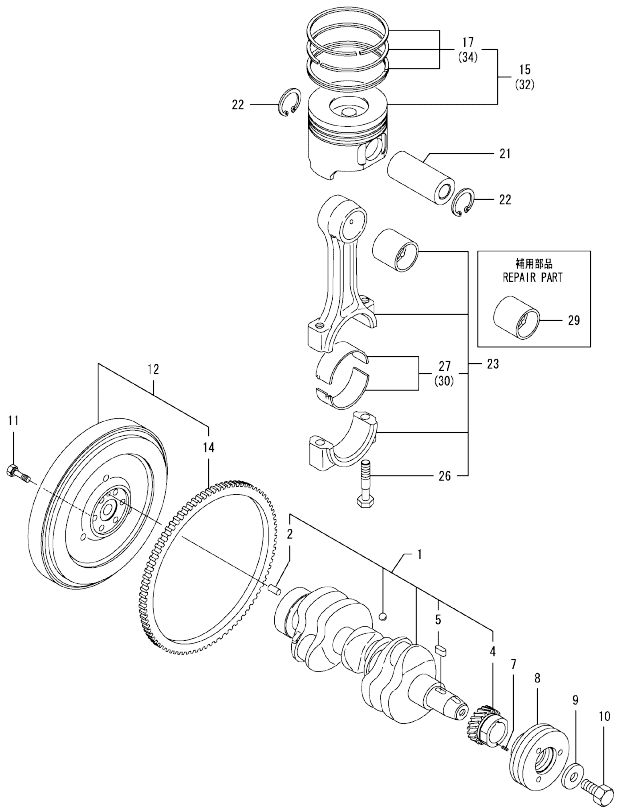

No.	Lev.	Parts No.	Description	Q'ty (A)	(B)	(C)	(D)	(E)	(F)	I	R
1	1	119802-21002	CRANKSHAFT ASSY	1							
2	2	129100-01580	PIN, M8X16	1							
4	2	119802-21202	GEAR, CRANKSHAFT	1							
5	2	22512-070140	KEY, 7X 14	1							
7	1	22351-030010	PIN, SPRING 3.0X10	1							
8	1	119802-21650	V-PULLEY, 110	1							
9	1	129795-21661	WASHER	1							
10	1	121850-21680	BOLT	1							
11	1	121111-21501	BOLT, FLYWHEEL	6							
12	1	129489-21590	FLYWHEEL ASSY	1							
14	2	119865-21600	GEAR, RING	1							
15	1	119802-22080	PISTON ASSY	3							
17	2	119802-22500	RING SET, PISTON	3							
21	1	119813-22300	PIN, PISTON	3							
22	1	129792-22400	CIRCLIP, 23	6							
23	1	719810-23100	ROD ASSY, CONNECTING	3							
26	2	119810-23200	BOLT, CONNECTING ROD	6							
27	2	119810-23601	BEARING, CRANK PIN	3							
29	1	119810-23910	BEARING, PISTON PIN	3							1
30	1	119810-23611	BEARING, 0.25 US	3							2
32	1	119802-22900	PISTON ASSY, 0.25 OS	3							3
34	2	119802-22950	RING SET, 0.25 OS	3							3

Remarks
(1)Repair parts.
(2)Under-sized(U.S.=0.25) parts.
(3)Over-sized(O.S.=0.25) parts.

N:Old ←Yes/No→ New. Q:Old ←No/Yes→ New. R:Old ←Yes/Yes→ New. S:Old ←No/No→ New. W:Add. Z:Discontinued. F:Interchangeable by set. K:Q'ty Change

Copyright (C) YANMAR CO., LTD. All RightsReserved.

Fig.9. LUB. OIL SYSTEM

(A)=3TNV82A-SSU
(B)=
(C)=
(D)=
(E)=
(F)=

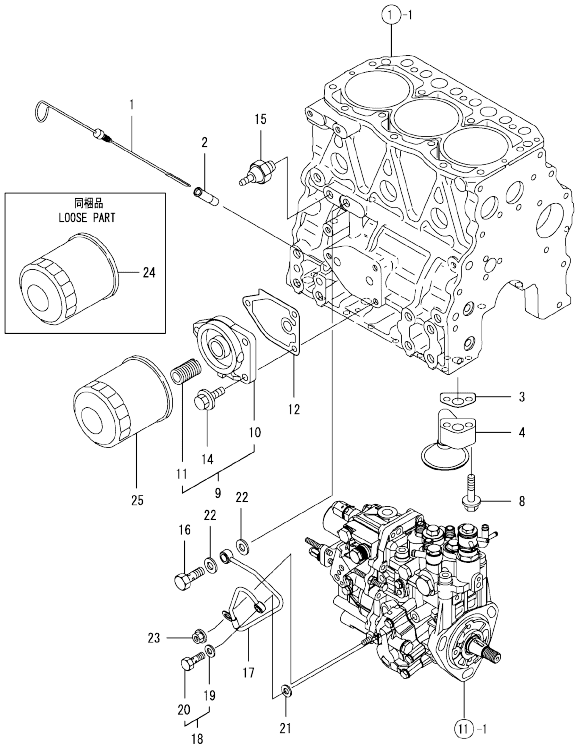

No.	Lev.	Parts No.	Description	Q'ty (A)	(B)	(C)	(D)	(E)	(F)	I	R
1	1	119802-34802	DIPSTICK, OIL	1							
2	1	121520-34810	GUIDE, DIPSTICK	1							
3	1	129150-35042	GASKET	1							
4	1	119810-35300	PIPE ASSY, OIL INLET	1							
8	1	26106-080352	BOLT, M8X 35 PLATED	2							
9	1	119802-35100	BRACKET ASSY, FILTER	1							
10	2	119802-35110	BRACKET, FILTER	1							
11	2	129100-35140	STUD	1							
12	1	129150-35111	GASKET	1							
14	1	26106-080202	BOLT, M8X 20 PLATED	3							
15	1	114250-39450	SWITCH, 0.5KG	1							
16	1	124160-39140	BOLT, PIPE JOINT M10	1							
17	1	119802-39450	PIPE ASSY, OIL	1							
18	1	129005-59830	BOLT ASSY, JOINT M8	1							
19	2	22190-080002	WASHER, SEAL 6	1							
20	2	23857-030000	BOLT, JOINT 3	1							
21	1	22190-080002	WASHER, SEAL 6	1							
22	1	22190-100002	WASHER, SEAL 10	2							
23	1	26366-060002	NUT, M6	1							
24	1	119005-35151	FILTER, D80X100L	1							
25	1	119005-35151	FILTER, D80X100L	1							1

Remarks
(1)Repair parts.

N:Old $\frac{\text{Yes}}{\text{No}}$ New. Q:Old $\frac{\text{No}}{\text{Yes}}$ New. R:Old $\frac{\text{Yes}}{\text{Yes}}$ New. S:Old $\frac{\text{No}}{\text{No}}$ New. W:Add. Z:Discontinued. F:Interchangeable by set. K:Q'ty Change

Copyright (C) YANMAR CO., LTD. All RightsReserved.

Fig.10. COOLING WATER SYSTEM

(A)=3TNV82A-SSU
(B)=
(C)=
(D)=
(E)=
(F)=

No.	Lev.	Parts No.	Description	Q'ty (A)	(B)	(C)	(D)	(E)	(F)	I	R
1	1	119802-42001	PUMP ASSY, WATER	1							
3	2	119810-42051	GASKET, WATER PUMP	1							
4	2	119810-42120	PLATE	1							
8	2	119810-42281	GASKET, WATER PUMP	1							
9	2	119810-42290	PIPE	1							
11	2	129054-42320	O-RING	1							
13	2	23876-030000	PLUG, R03	2							
14	2	26106-060142	BOLT, M6X 14 PLATED	2							
15	2	26106-060202	BOLT, M6X 20 PLATED	2							
16	1	129486-42050	GASKET, WATER PUMP	1							
17	1	23414-080000	GASKET, 8X1.0	1							
18	1	26106-080122	BOLT, M8X 12 PLATED	1							
19	1	26106-080352	BOLT, M8X 35 PLATED	1							
20	1	26106-080552	BOLT, M8X 55 PLATED	3							
21	1	129155-42350	V-PULLEY	1							
22	1	129044-42290	V-BELT, A38.5	1							
23	1	121267-44741	FAN, COOLING D=360	1							
24	1	171353-44760	SPACER, FAN	1							
25	1	26106-060402	BOLT, M6X 40 PLATED	4							
26	1	129155-49801	THERMOSTAT, 71	1							
27	1	129150-49811	GASKET, THERMOSTAT	1							
28	1	129350-49530	COVER, THERMOSTAT	1							
29	1	129795-49551	GASKET	1							
30	1	26106-080222	BOLT, M8X 22 PLATED	2							
31	1	171056-49120	PLUG, DRAIN	1							
32	1	121450-42450	PLUG, M16	2							
33	1	124465-44950	GASKET, 16	2							
34	1	119802-49610	PIPE ASSY, WATER	1							
35	2	119802-49711	PIPE ASSY, WATER	1							
36	2	119802-49730	RETAINER, PIPE	1							
37	2	124722-59050	CLIP, HOSE 9	2							
38	2	119802-59320	TUBE, CORRUGATED	1							
39	1	119802-49620	PIPE ASSY, WATER	1							
40	2	119802-49721	PIPE ASSY, WATER	1							
41	2	124722-59050	CLIP, HOSE 9	2							

N:Old ←Yes/No→ New. Q:Old ←No/Yes→ New. R:Old ←Yes/Yes→ New. S:Old ←No/No→ New. W:Add. Z:Discontinued. F:Interchangeable by set. K:Q'ty Change

Copyright (C) YANMAR CO., LTD. All RightsReserved.

Fig.11. FUEL INJECTION PUMP

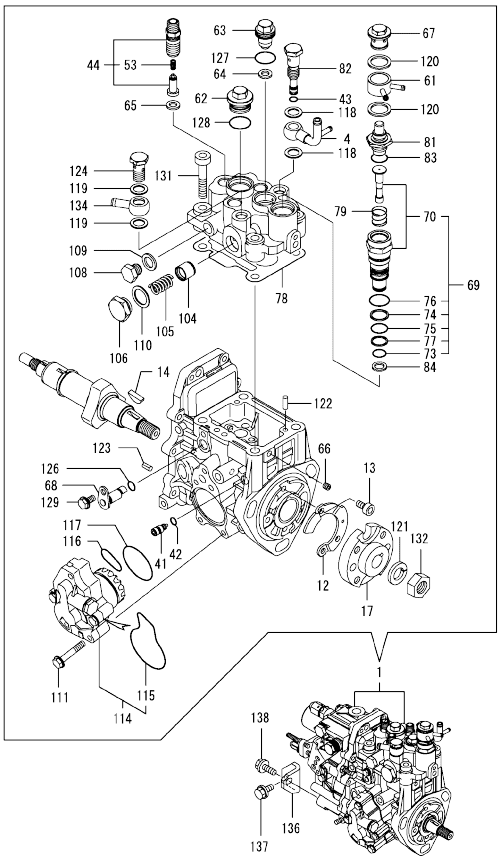

Remarks
(1)Governor(Fig.12) is incorporated in this Fuel Injection Pump(No.1).

(A)=3TNV82A-SSU
(B)=
(C)=
(D)=
(E)=
(F)=

No.	Lev.	Parts No.	Description	Q'ty (A)	(B)	(C)	(D)	(E)	(F)	I	R
1	1	719940-51340	PUMP ASSY, INJECTION	1							1
4	2	158552-51670	JOINT, OVER FLOW	1							
12	2	129008-51900	COVER, GEAR CASE	1							
13	2	129008-51920	BOLT, M6X10	2							
14	2	119802-51090	KEY, 4X16	1							
17	2	158552-51151	FLANGE	1							
41	2	158600-51270	STOPPER, TAPPET	1							
42	2	158563-51281	O-RING, 4D S6	1							
43	2	158563-51281	O-RING, 4D S6	1							
44	2	129509-51390	VALVE ASSY, DELIVERY	3							
53	3	158563-51330	SPRING, DELIVERY	3							
61	2	158553-51551	JOINT	1							
62	2	158601-51550	PLUG	1							
63	2	119802-51560	PLUG, BARREL	1							
64	2	158552-51571	GASKET	1							
65	2	158552-51571	GASKET	3							
66	2	158557-51570	PLUG	1							
67	2	158601-51570	PLUG	1							
68	2	158552-51580	LIFTER	1							
69	2	119802-51590	TIMER SET	1							
70	3	119802-51600	TIMER ASSY	1							
73	3	158553-51670	O-RING, 1011	1							
74	3	119802-51680	RING, BACK UP	1							
75	3	119802-51690	O-RING	1							
76	3	24356-190200	O-RING, 4D19020	1							
77	3	24372-000150	RING, BACK UP T2P15	1							
78	2	158552-51600	GASKET	1							
79	2	158553-51630	SPRING, TIMER	1							
81	2	158553-51640	ELEMENT	1							
82	2	158601-51650	JOINT, OVER FLOW	1							
83	2	158553-51660	O-RING, P14	1							
84	2	158553-51680	GASKET	1							
104	2	158601-51770	PISTON	1							
105	2	158552-51781	SPRING	1							
106	2	158601-51790	PLUG	1							
108	2	158553-51930	PLUG, M12	1							
109	2	22190-120002	WASHER, SEAL 12	1							
110	2	22190-180002	WASHER, SEAL 18	1							
111	2	158553-51770	BOLT	4							
114	2	158552-52100	PUMP ASSY, FUEL FEED	1							
115	3	158552-52500	O-RING	1							
116	2	158552-52311	O-RING	1							
117	2	158552-52400	O-RING, 4E S42	1							
118	2	22190-120002	WASHER, SEAL 12	2							
119	2	22190-120002	WASHER, SEAL 12	2							
120	2	22190-180002	WASHER, SEAL 18	2							
121	2	22217-140000	WASHER, SPRING 14	1							
122	2	22312-050140	PIN, PARALLEL M5X14	2							
123	2	22351-050010	PIN, SPRING 5.0X10	2							
124	2	23857-060000	BOLT, JOINT 6	1							
126	2	24311-000070	O-RING, 1AP7.0	1							

N:Old ←Yes/No→ New. Q:Old ←No/Yes→ New. R:Old ←Yes/Yes→ New. S:Old ←No/No→ New. W:Add. Z:Discontinued. F:Interchangeable by set. K:Q'ty Change

++ CONTINUE ++

Copyright (C) YANMAR CO., LTD. All RightsReserved.

Fig.11. FUEL INJECTION PUMP

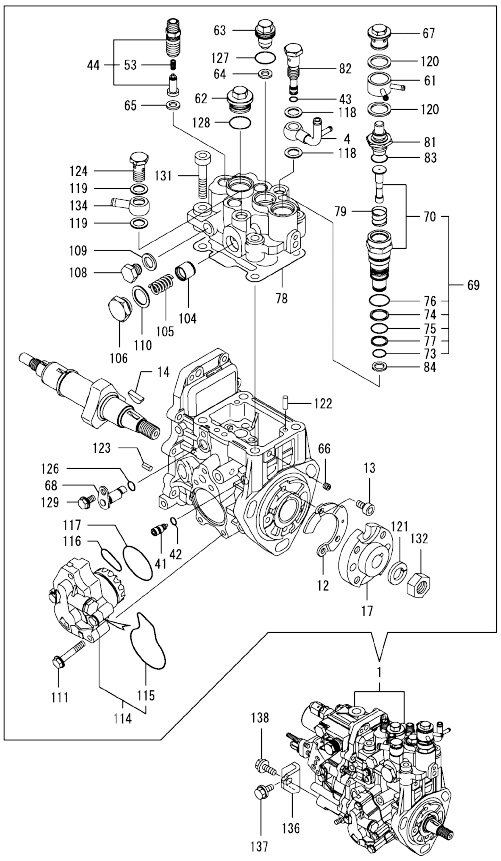

Remarks
(1)Governor(Fig.12) is incorporated in this Fuel Injection Pump(No.1).

(A)=3TNV82A-SSU
(B)=
(C)=
(D)=
(E)=
(F)=

No.	Lev.	Parts No.	Description	Q'ty (A)	(B)	(C)	(D)	(E)	(F)	I	R
127	2	24356-190180	O-RING, 4D19018	1							
128	2	24356-190200	O-RING, 4D19020	1							
129	2	26106-060102	BOLT, M6X 10 PLATED	1							
131	2	26450-080452	BOLT, M8X 45	4							
132	2	26776-140002	NUT, LOCK M14	1							
134	2	129916-59020	JOINT, PIPE 12	1							
136	1	119802-51250	RETAINER, PUMP	1							
137	1	26106-080162	BOLT, M8X 16 PLATED	1							
138	1	26106-080202	BOLT, M8X 20 PLATED	1							

N:Old ←Yes/No→ New. Q:Old ←No/Yes→ New. R:Old ←Yes/Yes→ New. S:Old ←No/No→ New. W:Add. Z:Discontinued. F:Interchangeable by set. K:Q'ty Change

Copyright (C) YANMAR CO., LTD. All RightsReserved.

Fig.12. GOVERNOR

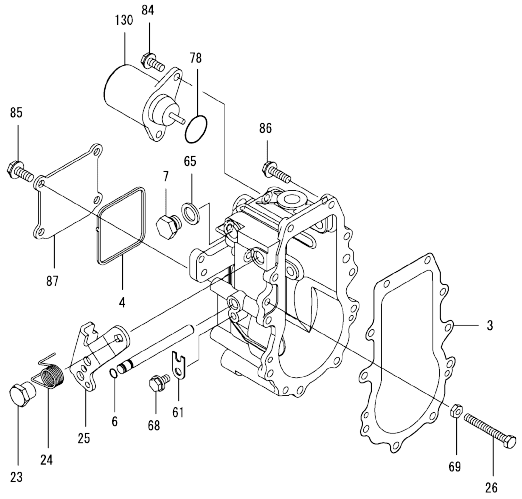

(A)=3TNV82A-SSU
(B)=
(C)=
(D)=
(E)=
(F)=

No.	Lev.	Parts No.	Description	Q'ty (A)	(B)	(C)	(D)	(E)	(F)	I	R
3	2	158553-61050	GASKET	1							
4	2	158553-61070	GASKET	1							
6	2	129155-51280	O-RING, S6	1							
7	2	158553-51930	PLUG, M12	1							
23	2	129255-61410	NUT, LOCK	1							
24	2	119807-61420	SPRING, RETURN	1							
25	2	158552-61441	LEVER, REGULATOR	1							
26	2	129155-61460	BOLT, IDLE	1							
61	2	119660-61901	RETAINER, SHAFT	1							
65	2	22190-120002	WASHER, SEAL 12	1							
68	2	26106-060102	BOLT, M6X 10 PLATED	1							
69	2	26756-060002	NUT, LOCK M6	1							
78	2	158552-61900	O-RING	1							
84	2	26106-060142	BOLT, M6X 14 PLATED	2							
85	2	26106-060142	BOLT, M6X 14 PLATED	4							
86	2	26106-060202	BOLT, M6X 20 PLATED	10							
87	2	129642-61060	COVER, GOVERNOR CASE	1							
130	2	119233-77932	SOLENOID, STOP	1							

Remarks
* This figure(Governor) is incorporated in the Fuel Injection Pump(Fig.11).

N:Old ◄Yes/No► New. Q:Old ◄No/Yes► New, R:Old ◄Yes/Yes► New, S:Old ◄No/No► New, W:Add, Z:Discontinued, F:Interchangeable by set, K:Q'ty Change

Copyright (C) YANMAR CO., LTD. All RightsReserved.

Fig.13. FUEL INJECTION VALVE

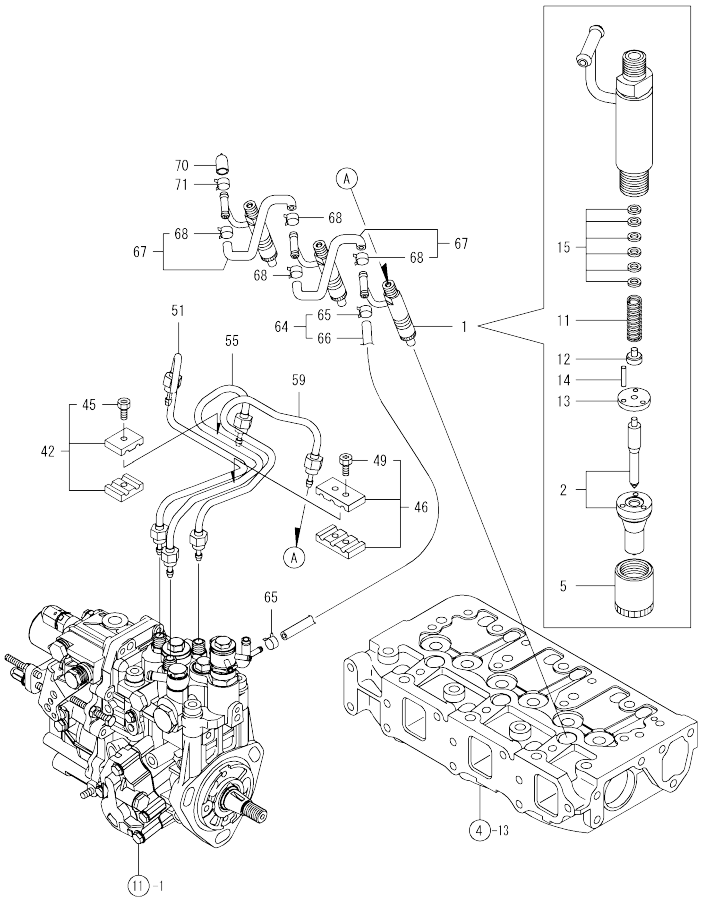

(A)=3TNV82A-SSU
(B)=
(C)=
(D)=
(E)=
(F)=

No.	Lev.	Parts No.	Description	Q'ty (A)	(B)	(C)	(D)	(E)	(F)	I	R
1	1	729646-53100	VALVE ASSY,INJECTION	3							
2	2	129646-53000	VALVE ASSY,INJECTION	3							
5	2	114250-53080	NUT, NOZZLE D16.95	3							
11	2	114250-53120	SPRING, NOZZLE	3							
12	2	114250-53130	SEAT, SPRING	3							
13	2	114250-53140	PLATE	3							
14	2	114250-53210	PIN	6							
15	2	119803-53400	SHIM SET	3							
42	1	119305-59120	RETAINER, PIPE	1							
45	2	129150-59131	BOLT, M4X14	1							
46	1	129150-59120	RETAINER, PIPE	1							
49	2	129150-59131	BOLT, M4X14	2							
51	1	119802-59810	PIPE ASSY, INJECTION	1							
55	1	119802-59820	PIPE ASSY, INJECTION	1							
59	1	119802-59830	PIPE ASSY, INJECTION	1							
64	1	119802-59550	PIPE ASSY, RETURN	1							
65	2	124722-59050	CLIP, HOSE 9	2							
66	2	119802-59560	PIPE, FUEL RETURN	1							
67	1	129486-59551	PIPE ASSY, RETURN	2							
68	2	124722-59050	CLIP, HOSE 9	4							
70	1	119593-59581	CAP	1							
71	1	124060-77680	CLIP, HOSE 10	1							

N:Old ←Yes/No→ New. Q:Old ←No/Yes→ New. R:Old ←Yes/Yes→ New. S:Old ←No/No→ New. W:Add. Z:Discontinued. F:Interchangeable by set. K:Q'ty Change

Copyright (C) YANMAR CO., LTD. All RightsReserved.

Fig.14. FUEL PIPING

(A)=3TNV82A-SSU
(B)=
(C)=
(D)=
(E)=
(F)=

No.	Lev.	Parts No.	Description	Q'ty (A)	(B)	(C)	(D)	(E)	(F)	I	R
1	1	129004-55612	BRACKET, FILTER	1							
2	1	119940-55690	SPACER	1							
3	1	129907-55801	FILTER, FUEL	1							
4	1	26106-080252	BOLT, M8X 25 PLATED	2							
5	1	26106-080302	BOLT, M8X 30 PLATED	2							
6	1	119940-59020	PIPE ASSY, FUEL L340	1							
7	2	124766-59050	CLIP, HOSE 12	2							
8	2	129255-59580	PIPE, FUEL	1							
9	1	129210-59070	PIPE ASSY, FUEL	1							
10	2	124766-59050	CLIP, HOSE 12	2							
11	2	105025-59760	PIPE, FUEL	1							
12	1	119225-52102	PUMP ASSY, FUEL FEED	1							
13	1	119802-55700	SEPARATOR ASSY	1							
14	2	129100-55690	RING, RETAINING	1							
15	2	119802-55710	ELEMENT	1							
16	2	119802-55730	CUP ASSY	1							
17	2	24311-000160	O-RING, 1AP16.0	1							
18	2	24321-000650	O-RING, 1AG65.0	1							
19	1	129907-55801	FILTER, FUEL	1							

同梱品
LOOSE PARTS

N:Old ←Yes/No→ New. Q:Old ←No/Yes→ New. R:Old ←Yes/Yes→ New. S:Old ←No/No→ New. W:Add. Z:Discontinued. F:Interchangeable by set. K:Q'ty Change

Copyright (C) YANMAR CO., LTD. All RightsReserved.

Fig.15. STARTING MOTOR

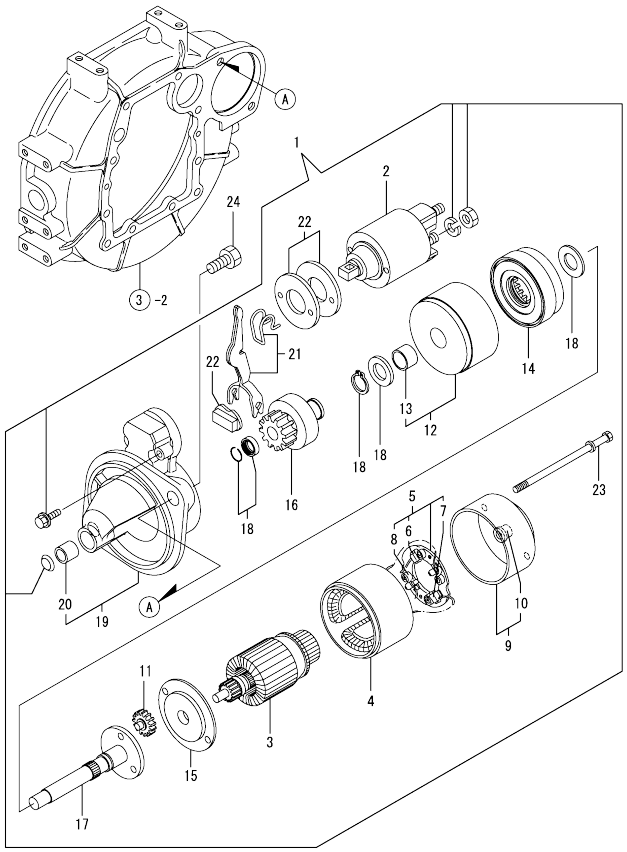

(A)=3TNV82A-SSU (D)=
(B)= (E)=
(C)= (F)=

No.	Lev.	Parts No.	Description	Q'ty (A)	(B)	(C)	(D)	(E)	(F)	I	R
1	1	129242-77010	STARTER, 1.7	1							
2	2	129698-77020	SWITCH ASSY	1							
3	2	129242-77100	ARMATURE ASSY	1							
4	2	129242-77110	YOKE ASSY	1							
5	2	129242-77120	HOLDER ASSY, BRUSH	1							
6	3	129242-77130	BRUSH	2							
7	3	129242-77140	BRUSH SET	1							
8	3	129242-77150	SPRING	4							
9	2	129242-77160	COVER ASSY	1							
10	3	129242-77170	METAL	1							
11	2	118400-77170	GEAR	3							
12	2	129242-77180	BRACKET	1							
13	3	129698-77190	BRACKET	1							
14	2	129698-77200	GEAR, INTERNAL	1							
15	2	129242-77210	BRACKET	1							
16	2	129698-77220	PINION ASSY	1							
17	2	129698-77230	SHAFT	1							
18	2	129698-77250	WASHER SET	1							
19	2	129242-77260	CASE ASSY	1							
20	3	X2114535200	METAL, STARTER	1							
21	2	129242-77270	LEVER SET	1							
22	2	129242-77280	COVER ASSY, DUST	1							
23	2	124195-77770	BOLT, THROUGH	2							
24	1	26116-120252	BOLT, M12X 25 PLATED	2							

N:Old ←Yes/No→ New. Q:Old ←No/Yes→ New. R:Old ←Yes/Yes→ New. S:Old ←No/No→ New. W:Add. Z:Discontinued. F:Interchangeable by set. K:Q'ty Change

Copyright (C) YANMAR CO., LTD. All RightsReserved.

Fig.16. GENERATOR

(A)=3TNV82A-SSU
(B)=
(C)=
(D)=
(E)=
(F)=

No.	Lev.	Parts No.	Description	Q'ty (A)	(B)	(C)	(D)	(E)	(F)	I	R
1	1	129795-01900	STUD	1							
2	1	129423-77200	GENERATOR, 12V-40A	1							
3	2	X9490561001	NUT	1							
4	2	119620-77380	ROTOR ASSY	1							
5	3	123501-79240	BEARING, BALL	1							
6	3	119620-79250	COVER	1							
7	2	119620-77421	FRAME ASSY, DRIVE	1							
8	3	119620-79200	BEARING, BALL	1							
9	3	119620-79210	PLATE, RETAINER	1							
10	3	119620-79220	SCREW	4							
11	3	119620-79230	STUD	2							
12	2	119620-77440	FRAME ASSY	1							
13	2	129240-79300	COVER	1							
14	2	119620-77461	PULLEY	1							
15	2	119620-77471	NUT	1							
16	2	119620-77490	COLLAR	1							
17	2	129423-77710	REGULATOR ASSY	1							
18	2	119620-79260	HOLDER	1							
19	2	129052-79270	HOLDER, BRUSH	1							
20	3	119620-77480	BRUSH ASSY	2							
21	3	119620-79280	SPRING	2							
22	2	119620-79290	SCREW	6							
23	2	119620-79300	SCREW	1							
24	2	119620-79310	BOLT	3							
25	2	119620-79320	SCREW	2							
26	2	119620-79330	BOLT	2							
27	2	119620-79340	BUSH, INSULATION	1							
28	2	119620-79350	NUT	2							
29	2	119620-79360	WASHER, THRUST	1							
30	1	26306-100002	NUT, M10	1							
31	1	119940-77270	SPACER, GENERATOR	1							
32	1	119802-77330	ADJUSTER	1							
33	1	129972-77341	BOLT, ADJUSTER L=50	1							
34	1	26106-080452	BOLT, M8X 45 PLATED	1							
35	1	119802-77200	RELAY, SAFETY	1							
36	1	129457-77511	CONNECTOR	1							
37	1	129211-77920	TIMER	1							

N:Old ←Yes/No→ New. Q:Old ←No/Yes→ New. R:Old ←Yes/Yes→ New. S:Old ←No/No→ New. W:Add. Z:Discontinued. F:Interchangeable by set. K:Q'ty Change

Copyright (C) YANMAR CO., LTD. All RightsReserved.

Fig.17. GASKET SET

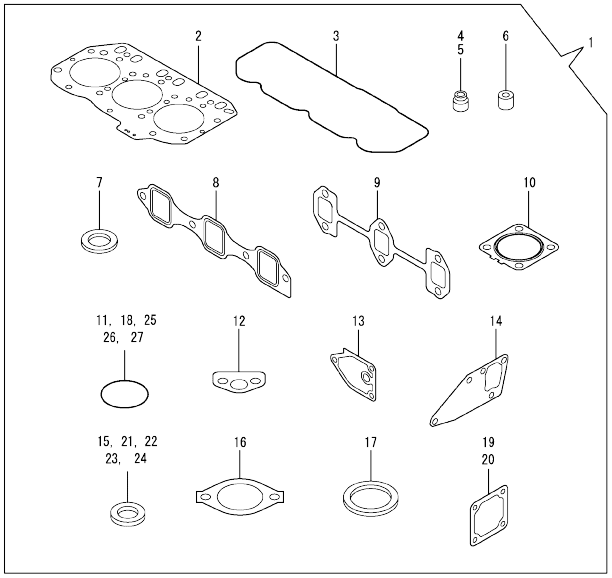

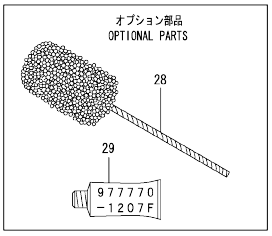

(A)=3TNV82A-SSU
(B)=
(C)=
(D)=
(E)=
(F)=

No.	Lev.	Parts No.	Description	Q'ty (A)	(B)	(C)	(D)	(E)	(F)	I	R
1	1	119940-92600	GASKET SET	1							1
2	2	119812-01330	GASKET, HEAD	1							
3	2	119802-11310	GASKET, BONNET	1							
4	2	119803-11340	SEAL, VALVE STEM	3							
5	2	124160-11340	SEAL, VALVE STEM	3							
6	2	119802-11870	PROTECTOR, NOZZLE	3							
7	2	119625-11880	SEAT, NOZZLE	3							
8	2	119813-12110	GASKET, MANIFOLD	1							
9	2	119810-13110	GASKET	1							
10	2	129004-13200	GASKET, SILENCER	1							
11	2	119609-32040	O-RING, P16	4							
12	2	129150-35042	GASKET	1							
13	2	129150-35111	GASKET	1							
14	2	129486-42050	GASKET, WATER PUMP	1							
15	2	124465-44950	GASKET, 16	2							
16	2	129795-49551	GASKET	1							
17	2	129150-49811	GASKET, THERMOSTAT	1							
18	2	121850-51960	O-RING	1							
19	2	129100-77510	GASKET	1							
20	2	129150-77511	GASKET	1							
21	2	22190-080002	WASHER, SEAL 6	2							
22	2	22190-100002	WASHER, SEAL 10	2							
23	2	22190-220002	WASHER, SEAL 22	1							
24	2	23414-080000	GASKET, 8X1.0	1							
25	2	24311-000120	O-RING, 1AP12.0	3							
26	2	24311-000320	O-RING, 1AP32.0	2							
27	2	24341-000240	O-RING, 1AS24.0	1							
28	1	129400-92420	HONE	1							1
29	1	977770-1207F	GASKET.LIQUID	1							1

Remarks
(1)Optional parts.

N:Old ←Yes/No→ New. Q:Old ←No/Yes→ New. R:Old ←Yes/Yes→ New. S:Old ←No/No→ New. W:Add. Z:Discontinued. F:Interchangeable by set. K:Q'ty Change

Copyright (C) YANMAR CO., LTD. All RightsReserved.

Parts No. Index

Parts No.	Fig. No.	Ref. No.
104211-11180	4	22
104211-11370	4	12
105025-59760	14	11
114250-39450	9	15
114250-53080	13	5
114250-53120	13	11
114250-53130	13	12
114250-53140	13	13
114250-53210	13	14
118400-77170	15	11
119005-35151	9	24
		25
119131-18320	6	5
119140-12680	5	16
119225-52102	14	12
119233-77932	12	130
119305-59120	13	42
119593-59581	13	70
119609-32040	2	11
	17	11
119620-01750	3	3
119620-02020	1	5
119620-77380	16	4
119620-77421	16	7
119620-77440	16	12
119620-77461	16	14
119620-77471	16	15
119620-77480	16	20
119620-77490	16	16
119620-79200	16	8
119620-79210	16	9
119620-79220	16	10
119620-79230	16	11
119620-79250	16	6
119620-79260	16	18
119620-79280	16	21
119620-79290	16	22
119620-79300	16	23
119620-79310	16	24
119620-79320	16	25
119620-79330	16	26
119620-79340	16	27
119620-79350	16	28
119620-79360	16	29
119625-11880	4	28
	17	7
119640-01640	3	8
119660-61901	12	61
119802-01190	1	21
119802-01520	2	6

Parts No.	Fig. No.	Ref. No.
119802-01561	2	7
119802-03010	4	37
119802-03080	5	1
119802-03110	4	39
119802-03121	4	40
119802-03130	4	41
119802-03141	4	42
119802-11100	4	19
119802-11110	4	20
119802-11241	4	1
119802-11251	4	2
119802-11260	4	4
119802-11270	4	5
119802-11280	4	6
119802-11310	4	44
	17	3
119802-11350	4	36
119802-11650	4	8
119802-11700	4	13
119802-11730	4	13 -1
119802-11810	4	53
119802-11870	4	27
	17	6
119802-11900	4	29
119802-12100	5	3
119802-12560	5	8
119802-13129	6	2
119802-14580	7	3
119802-21002	8	1
119802-21202	8	4
119802-21650	8	8
119802-22080	8	15
119802-22500	8	17
119802-22900	8	32
119802-22950	8	34
119802-25051	7	9
119802-25071	7	14
119802-25101	7	10
119802-25901	7	16
119802-32070	2	13
119802-32100	2	12
119802-32111	2	17
119802-32120	2	18
119802-32130	2	19
119802-34802	9	1
119802-35100	9	9
119802-35110	9	10
119802-39450	9	17
119802-42001	10	1
119802-49610	10	34

Parts No.	Fig. No.	Ref. No.
119802-49620	10	39
119802-49711	10	35
119802-49721	10	40
119802-49730	10	36
119802-51090	11	14
119802-51250	11	136
119802-51560	11	63
119802-51590	11	69
119802-51600	11	70
119802-51680	11	74
119802-51690	11	75
119802-55700	14	13
119802-55710	14	15
119802-55730	14	16
119802-59320	10	38
119802-59550	13	64
119802-59560	13	66
119802-59810	13	51
119802-59820	13	55
119802-59830	13	59
119802-77200	16	35
119802-77330	16	32
119803-11340	4	24
	17	4
119803-53400	13	15
119807-61420	12	24
119808-12520	5	11
		26
119808-12540	5	13
119810-01200	1	22
119810-01730	3	6
119810-02871	1	27
119810-02931	1	15
119810-02941	1	30
119810-11120	4	21
119810-13110	6	1
	17	9
119810-14400	7	2
119810-23200	8	26
119810-23601	8	27
119810-23611	8	30
119810-23910	8	29
119810-35300	9	4
119810-42051	10	3
119810-42120	10	4
119810-42281	10	8
119810-42290	10	9
119812-01330	1	23
	17	2
119813-12110	5	4

Parts No.	Fig. No.	Ref. No.
119813-12110	17	8
119813-22300	8	21
119823-01770	3	7
119865-21600	8	14
119866-12541	5	14
119910-12210	5	7
119910-12510	5	10
119910-12610	5	9
119934-01800	2	5
119940-55690	14	2
119940-59020	14	6
119940-77270	16	31
119940-92600	17	1
120270-54410	4	30
121023-01551	2	27
121111-21501	8	11
121267-44741	10	23
121450-42450	10	32
121520-34810	9	2
121850-21680	8	10
121850-51960	2	20
	17	18
123501-79240	16	5
123900-13610	6	3
123900-13630	6	4
124060-01050	1	9
124060-11800	4	52
124060-77680	13	71
124160-01751	2	8
	4	35
124160-01910	1	11
		12
124160-11340	4	23
	17	5
124160-11360	4	47
124160-39140	9	16
124195-77770	15	23
124240-01871	2	9
124465-44950	10	33
	17	15
124722-59050	10	37
		41
	13	65
		68
124766-59050	14	7
		10
129001-01250	1	10
129001-32330	2	16
129004-13200	6	7
	17	10

Parts No. Index

Parts No.	Fig. No.	Ref. No.
129004-55612	14	1
129005-59830	9	18
129008-51900	11	12
129008-51920	11	13
129044-42290	10	22
129051-12530	5	12
		27
129052-79270	16	19
129054-42320	10	11
129100-01580	3	1
		13
	8	2
129100-01640	3	14
129100-35140	9	11
129100-55690	14	14
129100-77501	5	20
129100-77510	5	21
	17	19
129150-02450	7	4
129150-03070	4	38
129150-11230	4	9
129150-11280	4	7
129150-11750	4	11
129150-14101	7	6
129150-14200	7	1
129150-25301	7	15
129150-35042	9	3
	17	12
129150-35111	9	12
	17	13
129150-49811	10	27
	17	17
129150-59120	13	46
129150-59131	13	45
		49
129150-77511	5	22
	17	20
129155-42350	10	21
129155-49801	10	26
129155-51280	12	6
129155-61460	12	26
129210-59070	14	9
129211-77920	16	37
129240-13550	6	8
129240-79300	16	13
129242-77010	15	1
129242-77100	15	3
129242-77110	15	4
129242-77120	15	5
129242-77130	15	6

Parts No.	Fig. No.	Ref. No.
129242-77140	15	7
129242-77150	15	8
129242-77160	15	9
129242-77170	15	10
129242-77180	15	12
129242-77210	15	15
129242-77260	15	19
129242-77270	15	21
129242-77280	15	22
129255-59580	14	8
129255-61410	12	23
129350-49530	10	28
129400-92420	17	28
129410-03990	5	2
129418-32320	2	15
129423-77200	16	2
129423-77710	16	17
129457-77511	16	36
129486-01670	3	17
129486-42050	10	16
	17	14
129486-59551	13	67
129489-21590	8	12
129509-51390	11	44
129612-01600	3	2
129612-12650	5	15
129642-61060	12	87
129646-53000	13	2
129698-77020	15	2
129698-77190	15	13
129698-77200	15	14
129698-77220	15	16
129698-77230	15	17
129698-77250	15	18
129792-22400	8	22
129795-01780	3	16
129795-01900	16	1
129795-01950	2	10
129795-02412	1	13
129795-21661	8	9
129795-49551	10	29
	17	16
129900-07900	4	50
129900-32130	2	14
129907-55801	14	3
		19
129916-59020	11	134
129972-77341	16	33
158552-51151	11	17
158552-51571	11	64

Parts No.	Fig. No.	Ref. No.
158552-51571	11	65
158552-51580	11	68
158552-51600	11	78
158552-51670	11	4
158552-51781	11	105
158552-52100	11	114
158552-52311	11	116
158552-52400	11	117
158552-52500	11	115
158552-61441	12	25
158552-61900	12	78
158553-51551	11	61
158553-51630	11	79
158553-51640	11	81
158553-51660	11	83
158553-51670	11	73
158553-51680	11	84
158553-51770	11	111
158553-51930	11	108
	12	7
158553-61050	12	3
158553-61070	12	4
158557-51570	11	66
158563-51281	11	42
		43
158563-51330	11	53
158600-51270	11	41
158601-51550	11	62
158601-51570	11	67
158601-51650	11	82
158601-51770	11	104
158601-51790	11	106
171051-01921	1	4
171056-49120	10	31
171340-77520	5	23
171353-44760	10	24
22190-080002	9	19
		21
	17	21
22190-100002	9	22
	17	22
22190-120002	11	109
		118
		119
	12	65
22190-180002	11	110
		120
22190-220002	3	10
	17	23
22217-140000	11	121

Parts No.	Fig. No.	Ref. No.
22312-050140	11	122
22351-030010	8	7
22351-050010	11	123
22351-060012	4	31
22512-070140	7	7
	8	5
22857-500100	4	45
		46
23000-060000	5	17
23414-080000	10	17
	17	24
23857-030000	9	20
23857-060000	11	124
23876-030000	2	3
	10	13
23876-040000	2	4
24311-000070	11	126
24311-000120	4	48
	17	25
24311-000160	14	17
24311-000320	2	21
	4	49
	17	26
24321-000650	14	18
24341-000240	2	28
	17	27
24356-190180	11	127
24356-190200	11	76
		128
24372-000150	11	77
26013-080222	5	18
		19
26106-060102	11	129
	12	68
26106-060142	10	14
	12	84
		85
26106-060162	2	29
26106-060202	10	15
	12	86
26106-060402	10	25
26106-080122	10	18
26106-080142	7	8
26106-080162	2	22
		23
	3	11
	4	51
	11	137
26106-080202	5	5
	9	14

Parts No. Index

Parts No.	Fig. No.	Ref. No.
26106-080202	11	138
26106-080222	10	30
26106-080252	4	32
	14	4
26106-080302	14	5
26106-080352	3	18
	9	8
	10	19
26106-080402	5	24
	7	13
26106-080452	3	12
	4	33
	16	34
26106-080502	4	34
26106-080552	2	24
	10	20
26106-080802	5	6
		25
26106-080852	2	25
26106-100202	6	9
26116-120252	15	24
26206-100252	3	4
26206-100302	3	5
26306-080002	2	26
	6	6
		10
26306-100002	16	30
26366-060002	9	23
26450-080452	11	131
26756-060002	12	69
26776-140002	11	132
27241-120000	1	14
27241-300000	1	8
27241-400000	4	18
27310-070001	4	25
719802-01560	1	1
719810-02981	1	24
719810-23100	8	23
719940-51340	11	1
729233-01500	2	1
729646-53100	13	1
977770-1207F	17	29
X2114535200	15	20
X9490561001	16	3

Parts No.	Fig. No.	Ref. No.

Parts No.	Fig. No.	Ref. No.

Parts No.	Fig. No.	Ref. No.