YANMAR

PARTS CATALOG

0CR10-M58600EN

Last update Mar., 2016

PREFACE

1.This Parts Catalog carries all parts incorporated in YANMAR Model 3TNV82A-XWL engine manufactured since Novemver, 2004.

2.Each illustration corresponds to the parts list on the following page.

3.When ordering parts,clearly write down the engine model and serial number,as well as the name and number of each part in your order sheet. This will help insure reliable delivery of the parts you have ordered.

Contents

0CR10-M58600

Fig. No.	Fig. Name
ENGINE SECTION (3TNV82A-XWL)	
1.	CYLINDER BLOCK
2.	GEAR HOUSING
3.	FLYWHEEL HOUSING & OIL SUMP
4.	CYLINDER HEAD & BONNET
5.	SUCTION MANIFOLD
6.	EXHAUST MANIFOLD
7.	CAMSHAFT & DRIVING GEAR
8.	CRANKSHAFT & PISTON
9.	LUB.OIL SYSTEM
10.	COOLING WATER SYSTEM
11.	FUEL INJECTION PUMP
12.	GOVERNOR
13.	FUEL INJECTION VALVE
14.	FUEL LINE
15.	STARTING MOTOR
16.	GENERATOR
17.	GASKET SET

Fig. No.	Fig. Name

Fig.1. CYLINDER BLOCK

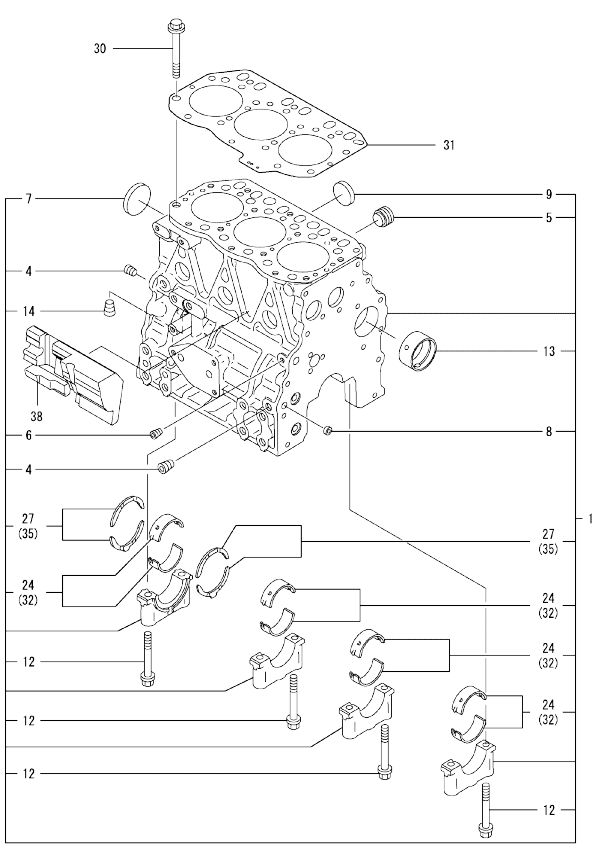

(A)=3TNV82A-XWL (D)=
(B)= (E)=
(C)= (F)=

No.	Lev.	Parts No.	Description	Q'ty (A)	(B)	(C)	(D)	(E)	(F)	I	R
1	1	719802-01560	BLOCK ASSY, CYLINDER	1							
4	2	124160-01910	PLUG, PT1/4	2							
5	2	171051-01921	PLUG, NPTF1	1							
6	2	124060-01050	PLUG, PT1/8	1							
7	2	129001-01250	PLUG, 50	1							
8	2	27241-120000	PLUG, 12	2							
9	2	27241-300000	PLUG 30	6							
12	2	119620-02020	BOLT, METAL CAP	8							
13	2	129795-02411	BUSH, CAMSHAFT	1							
14	2	124160-01910	PLUG, PT1/4	1							
24	2	719810-02980	BEARING, MAIN	4							3
27	2	119810-02930	BEARING, THRUST	1							
30	1	119810-01200	BOLT, HEAD	14							
31	1	119812-01330	GASKET, HEAD	1							
32	1	119810-02870	BEARING, 0.25 US	4							1
35	1	119810-02940	BEARING, THRUST 0.25	2							2
38	1	119802-01190	SPACER	1							

Remarks
(1) UNDER-SIZE(U.S=0.25)PART.
(2) OVER-SIZE(O.S=0.25)PART.
(3) REPAIR PART.

N:Old ←Yes/No→ New. Q:Old ←No/Yes→ New. R:Old ←Yes/Yes→ New. S:Old ←No/No→ New. W:Add. Z:Discontinued. F:Interchangeable by set. K:Q'ty Change

Copyright (C) YANMAR CO., LTD. All RightsReserved.

Fig.2. GEAR HOUSING

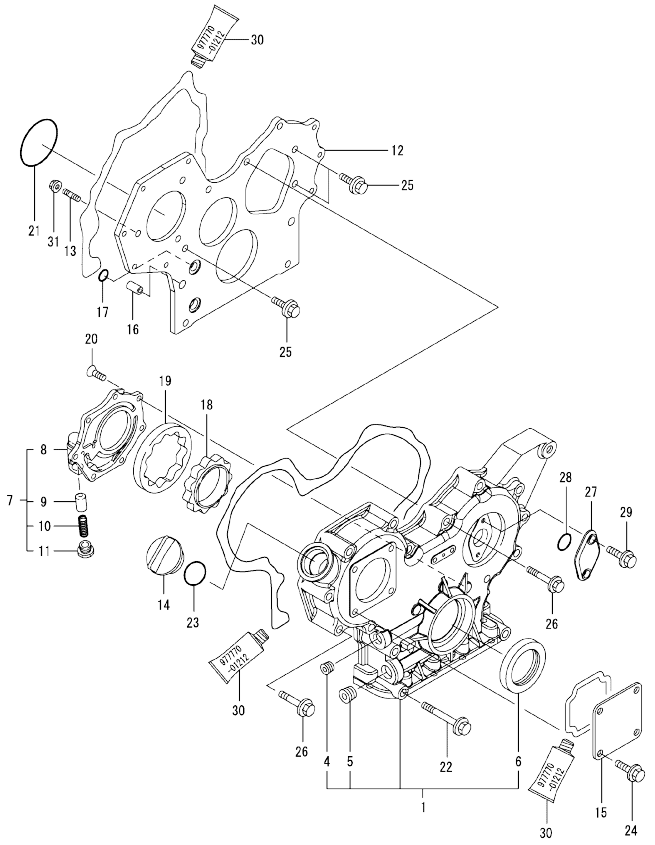

(A)=3TNV82A-XWL
(B)=
(C)=
(D)=
(E)=
(F)=

No.	Lev.	Parts No.	Description	Q'ty (A)	(B)	(C)	(D)	(E)	(F)	I	R
1	1	719802-01500	CASE ASSY, GEAR	1							
4	2	23876-030000	PLUG, R03	1							
5	2	23876-040000	PLUG, R04	1							
6	2	129795-01800	SEAL, OIL	1							
7	1	119802-32100	COVER ASSY	1							
8	2	119802-32070	COVER	1							
9	2	129900-32130	VALVE, RELIEF	1							
10	2	129418-32320	SPRING	1							
11	2	129001-32330	PLUG	1							
12	1	119802-01520	FLANGE, GEAR CASE	1							
13	1	119802-01560	STUD, M8X25	3							
14	1	124160-01751	COVER, FILLER	1							
15	1	124240-01871	COVER	1							
16	1	129795-01950	PIPE, KNOCK L=18	2							
17	1	119609-32040	O-RING, P16	4							
18	1	119802-32111	ROTOR, INNER	1							
19	1	119802-32120	ROTOR, OUTER	1							
20	1	119802-32130	SCREW, M6X16	7							
21	1	121850-51960	O-RING	1							
22	1	129001-91841	BOLT, M8X85	3							
23	1	24311-000320	O-RING, 1AP32.0	1							
24	1	26106-080162	BOLT, M8X 16 PLATED	4							
25	1	26106-080162	BOLT, M8X 16 PLATED	3							
26	1	26106-080552	BOLT, M8X 55 PLATED	12							
27	1	121023-01550	COVER	1							
28	1	24341-000240	O-RING, 1AS24.0	1							
29	1	26106-060162	BOLT, M6X 16 PLATED	2							
30	1	977770-01212	GASKET, LIQUID	1							1
31	1	26306-080002	NUT, M8	3							

Remarks
(1) OPTIONAL PART.

N:Old ←Yes/No→ New. Q:Old ←No/Yes→ New. R:Old ←Yes/Yes→ New. S:Old ←No/No→ New. W:Add. Z:Discontinued. F:Interchangeable by set. K:Q'ty Change

Copyright (C) YANMAR CO., LTD. All RightsReserved.

Fig.3. FLYWHEEL HOUSING & OIL SUMP

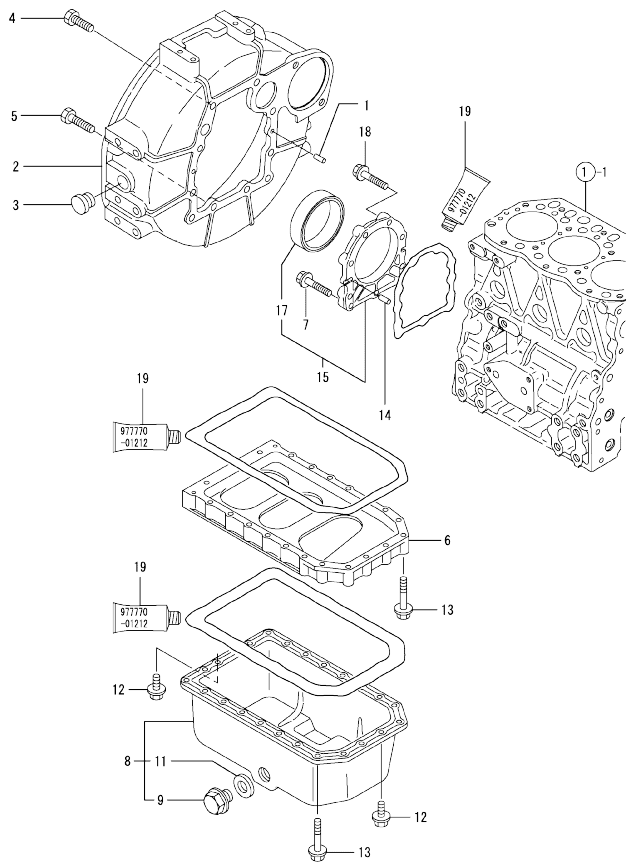

0CR10-M58600 Fig.3

(A)=3TNV82A-XWL (D)=
(B)= (E)=
(C)= (F)=

No.	Lev.	Parts No.	Description	Q'ty (A)	(B)	(C)	(D)	(E)	(F)	I	R
1	1	129100-01580	PIN, M8X16	2							
2	1	129612-01600	HOUSING, FLYWHEEL	1							
3	1	119620-01750	CAP	1							
4	1	26206-100252	BOLT, M10X 25 PLATED	6							
5	1	26206-100302	BOLT, M10X 30 PLATED	4							
6	1	119810-01730	SPACER, OIL SUMP	1							
7	1	26106-080352	BOLT, M8X 35 PLATED	3							
8	1	119810-01770	SUMP ASSY, OIL	1							
9	2	119640-01640	PLUG, DRAIN M22	1							
11	2	22190-220002	WASHER, SEAL 22	1							
12	1	26106-080162	BOLT, M8X 16 PLATED	6							
13	1	26106-080452	BOLT, M8X 45 PLATED	22							
14	1	129100-01580	PIN, M8X16	2							
15	1	129100-01640	CASE ASSY, OIL SEAL	1							
17	2	129795-01780	SEAL, OIL	1							
18	1	129486-01670	BOLT, M8X30	6							
19	1	977770-01212	GASKET, LIQUID	1							1

Remarks
(1) OPTIONAL PART.

N:Old ←Yes/No→ New. Q:Old ←No/Yes→ New. R:Old ←Yes/Yes→ New. S:Old ←No/No→ New. W:Add. Z:Discontinued. F:Interchangeable by set. K:Q'ty Change

Copyright (C) YANMAR CO., LTD. All RightsReserved.

Fig.4. CYLINDER HEAD & BONNET

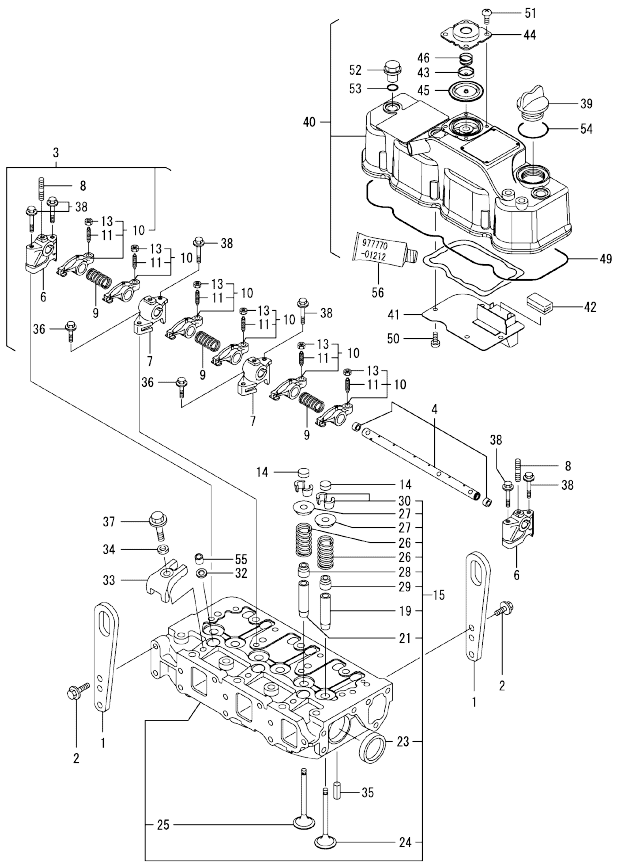

(A)=3TNV82A-XWL
(B)=
(C)=
(D)=
(E)=
(F)=

No.	Lev.	Parts No.	Description	Q'ty (A)	(B)	(C)	(D)	(E)	(F)	I	R
1	1	129900-07900	LIFTER	2							
2	1	26106-080142	BOLT, M8X 14 PLATED	4							
3	1	119802-11241	SHAFT ASSY, ROCKER	1							
4	2	119802-11251	SHAFT, ROCKER ARM	1							
6	2	119802-11260	SUPPORT, ROCKER ARM	2							
7	2	119802-11270	SUPPORT, ROCKER ARM	2							
8	2	119802-11280	STUD	3							
9	2	129150-11280	SPRING	3							
10	2	119802-11650	ARM, ROCKER	6							
11	3	129150-11230	SCREW, VALVE ADJUST	6							
13	3	129150-11750	NUT, M8	6							
14	1	104211-11370	CAP, VALVE	6							
15	1	119802-11700	HEAD ASSY, CYLINDER	1							
19	2	124060-11800	GUIDE, VALVE	3							1
21	2	119802-11810	GUIDE, VALVE	3							1
23	2	27241-400000	PLUG, 40	2							
24	2	119802-11100	VALVE, INTAKE	3							
25	2	119802-11110	VALVE, EXHAUST	3							
26	2	119810-11120	SPRING, VALVE	6							
27	2	104211-11180	RETAINER, SPRING	6							
28	2	124160-11340	SEAL, VALVE STEM	3							
29	2	124950-11340	SEAL, VALVE STEM	3							
30	2	27310-070001	COTTER, 7	6							
32	1	119625-11880	SEAT, NOZZLE	3							
33	1	119802-11900	RETAINER, NOZZLE	3							
34	1	120270-54410	WASHER, INJECTOR	3							
35	1	22351-060012	PIN, SPRING 6.0X12	2							
36	1	26106-080252	BOLT, M8X 25 PLATED	2							
37	1	26106-080452	BOLT, M8X 45 PLATED	3							
38	1	26106-080502	BOLT, M8X 50 PLATED	6							
39	1	124160-01751	COVER, FILLER	1							
40	1	119802-11350	BONNET ASSY, HEAD	1							
41	2	119802-03010	PLATE	1							
42	2	129150-03070	BAFFLE, BREATHER	1							
43	2	119802-03110	PLATE	1							
44	2	119802-03121	COVER, DIAPHRAGM	1							
45	2	119802-03130	DIAPHRAGM	1							
46	2	119802-03141	SPRING, DIAPHRAGM	1							
49	2	119802-11310	GASKET, BONNET	1							
50	2	22857-500100	SCREW, 5X10	4							
51	2	22857-500100	SCREW, 5X10	4							
52	1	124160-11360	KNOB	3							
53	1	24311-000120	O-RING, 1AP12.0	3							
54	1	24311-000320	O-RING, 1AP32.0	1							
55	1	119802-11870	PROTECTOR, NOZZLE	3							
56	1	977770-01212	GASKET, LIQUID	1							2

Remarks
(1) REPAIR PART.
(2) OPTIONAL PART.

N:Old ←Yes/No→ New. Q:Old ←No/Yes→ New. R:Old ←Yes/Yes→ New. S:Old ←No/No→ New. W:Add. Z:Discontinued. F:Interchangeable by set. K:Q'ty Change

Copyright (C) YANMAR CO., LTD. All RightsReserved.

Fig.5. SUCTION MANIFOLD

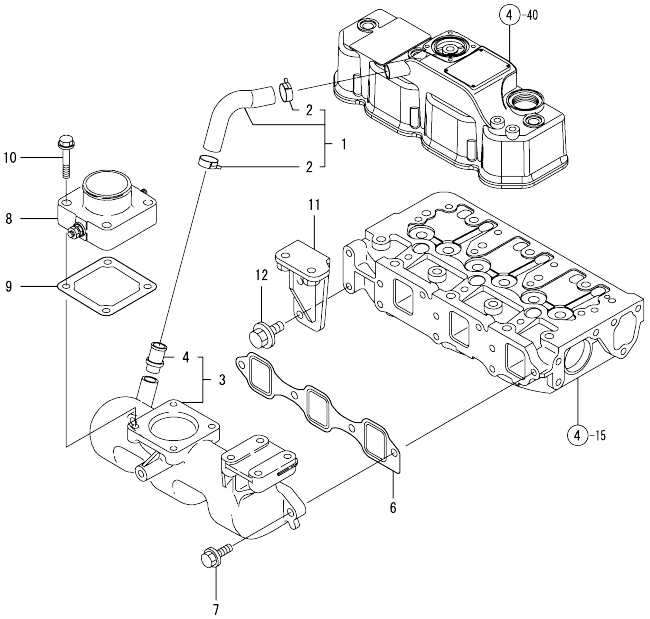

(A)=3TNV82A-XWL (D)=
(B)= (E)=
(C)= (F)=

No.	Lev.	Parts No.	Description	Q'ty (A)	(B)	(C)	(D)	(E)	(F)	I	R
1	1	119802-03090	PIPE , BREATHER	1							
2	2	129410-03990	CLAMP 22	2							
3	1	119802-12140	MANIFOLD, AIR INTAKE	1							
4	2	129001-11340	PIPE , BREATHER	1							
6	1	119810-12112	GASKET, MANIFOLD	1							
7	1	26106-080252	BOLT, M8X 25 PLATED	4							
8	1	129120-77501	HEATER	1							
9	1	129150-77511	GASKET	1							
10	1	26106-080352	BOLT, M8X 35 PLATED	4							
11	1	119802-55620	BRACKET, FILTER	1							
12	1	26106-080162	BOLT, M8X 16 PLATED	2							

N:Old ←Yes/No→ New. Q:Old ←No/Yes→ New. R:Old ←Yes/Yes→ New. S:Old ←No/No→ New. W:Add. Z:Discontinued. F:Interchangeable by set. K:Q'ty Change

Copyright (C) YANMAR CO., LTD. All RightsReserved.

Fig.6. EXHAUST MANIFOLD

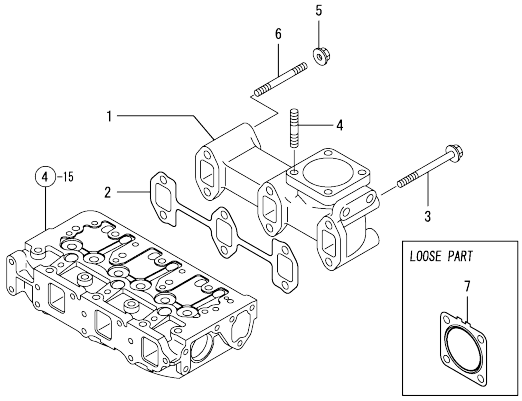

(A)=3TNV82A-XWL (D)=
(B)= (E)=
(C)= (F)=

No.	Lev.	Parts No.	Description	Q'ty (A)	(B)	(C)	(D)	(E)	(F)	I	R
1	1	119888-13101	MANIFOLD, EXHAUST	1							
2	1	119810-13110	GASKET	1							
3	1	119802-13640	BOLT, M8X60 10.9T	4							
4	1	119131-18320	STUD, M8X22	4							
5	1	26306-080002	NUT, M8	2							
6	1	119802-13740	STUD, M8X60	2							
7	1	129004-13200	GASKET, SILENCER	1							

N:Old ←Yes/No→ New. Q:Old ←No/Yes→ New. R:Old ←Yes/Yes→ New. S:Old ←No/No→ New. W:Add. Z:Discontinued. F:Interchangeable by set. K:Q'ty Change

Copyright (C) YANMAR CO., LTD. All RightsReserved.

Fig.7. CAMSHAFT & DRIVING GEAR

(A)=3TNV82A-XWL
(B)=
(C)=
(D)=
(E)=
(F)=

No.	Lev.	Parts No.	Description	Q'ty (A)	(B)	(C)	(D)	(E)	(F)	I	R
1	1	129150-14200	TAPPET	6							
2	1	119810-14400	ROD, PUSH	6							
3	1	119802-14580	CAMSHAFT ASSY	1							
4	2	129150-02450	BEARING, THRUST	1							
7	2	129150-14101	GEAR, CAMSHAFT	1							
8	2	22512-070140	KEY, 7X 14	1							
9	1	26106-080142	BOLT, M8X 14 PLATED	2							
10	1	119802-25051	SHAFT, IDLE	1							
11	1	119802-25100	GEAR ASSY, IDLE	1							
14	2	119802-25070	BUSH, IDLE GEAR	1							1
15	1	26106-080402	BOLT, M8X 40 PLATED	3							
16	1	129150-25301	BOLT	4							
17	1	119802-25901	GEAR, PUMP	1							
18	1	158552-51151	FLANGE	1							
19	1	22217-140000	WASHER, SPRING 14	1							
20	1	26776-140002	NUT, LOCK M14	1							

Remarks
(1) REPAIR PART.

N:Old ←Yes/No→ New. Q:Old ←No/Yes→ New, R:Old ←Yes/Yes→ New, S:Old ←No/No→ New. W:Add. Z:Discontinued. F:Interchangeable by set. K:Q'ty Change

Copyright (C) YANMAR CO., LTD. All RightsReserved.

Fig.8. CRANKSHAFT & PISTON

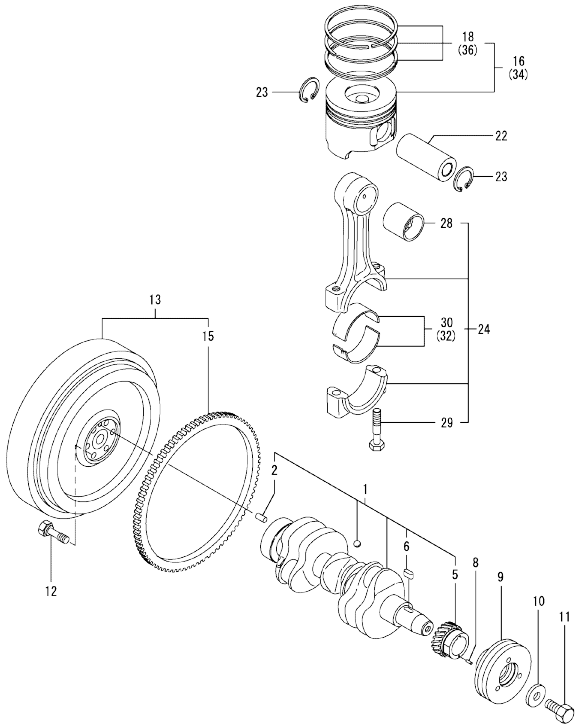

Remarks
(1) REPAIR PART.
(2) UNDER-SIZE(U.S=0.25)PART.
(3) OVER-SIZE(O.S=0.25)PART.

(A)=3TNV82A-XWL (D)=
(B)= (E)=
(C)= (F)=

No.	Lev.	Parts No.	Description	Q'ty (A)	(B)	(C)	(D)	(E)	(F)	I	R
1	1	119802-21002	CRANKSHAFT ASSY	1							
2	2	129100-01580	PIN, M8X16	1							
5	2	119802-21202	GEAR, CRANKSHAFT	1							
6	2	22512-070140	KEY, 7X 14	1							
8	1	22351-030010	PIN, SPRING 3.0X10	1							
9	1	119802-21650	V-PULLEY, 110	1							
10	1	129795-21661	WASHER	1							
11	1	121850-21680	BOLT	1							
12	1	121111-21501	BOLT, FLYWHEEL	6							
13	1	129489-21590	FLYWHEEL ASSY	1							
15	2	119865-21600	GEAR, RING	1							
16	1	119802-22080	PISTON ASSY	3							
18	2	119802-22500	RING SET, PISTON	3							
22	1	119813-22300	PIN, PISTON	3							
23	1	129792-22400	CIRCLIP, 23	6							
24	1	719810-23100	ROD ASSY, CONNECTING	3							
28	2	119810-23910	BEARING, PISTON PIN	3							1
29	2	119810-23200	BOLT, CONNECTING ROD	6							
30	2	119810-23600	BEARING, CRANK PIN	3							
32	1	119810-23610	BEARING, 0.25 US	3							2
34	1	719802-22900	PISTON ASSY, 0.25 OS	3							3
36	2	719802-22950	RING SET, 0.25 OS	3							3

N:Old ←Yes/No→ New. Q:Old ←No/Yes→ New. R:Old ←Yes/Yes→ New. S:Old ←No/No→ New. W:Add. Z:Discontinued. F:Interchangeable by set. K:Q'ty Change

Copyright (C) YANMAR CO., LTD. All RightsReserved.

Fig.9. LUB.OIL SYSTEM

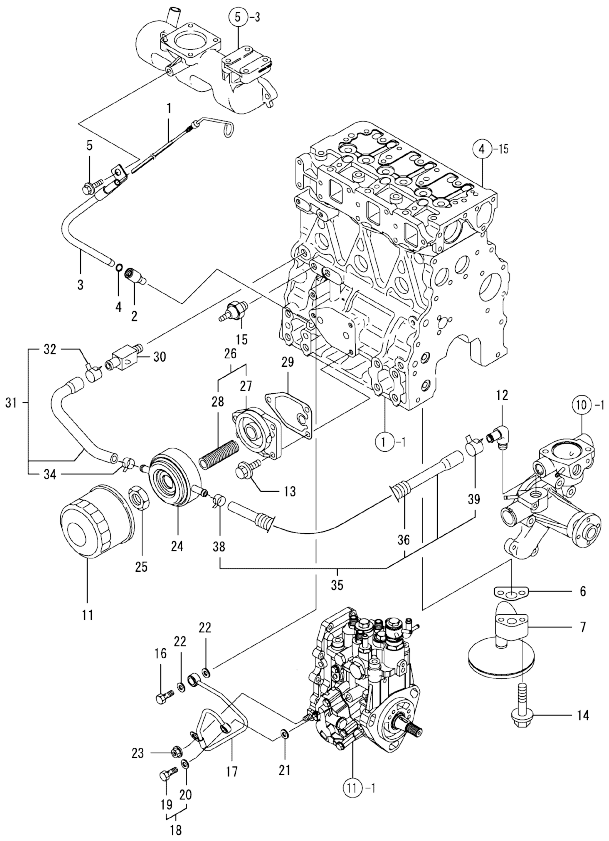

(A)=3TNV82A-XWL
(B)=
(C)=
(D)=
(E)=
(F)=

No.	Lev.	Parts No.	Description	Q'ty (A)	(B)	(C)	(D)	(E)	(F)	I	R
1	1	119802-34821	DIPSTICK, OIL	1							
2	1	119260-34810	GUIDE, DIPSTICK	1							
3	1	119802-34850	GUIDE, DIPSTICK	1							
4	1	24311-240100	O-RING, 1AP10A	1							
5	1	26106-080162	BOLT, M8X 16 PLATED	1							
6	1	129150-35042	GASKET	1							
7	1	119810-35300	PIPE ASSY, OIL INLET	1							
11	1	129150-35170	FILTER,LO	1							1
12	1	119944-49300	ELBOW, PT3/8	1							
13	1	26106-080202	BOLT, M8X 20 PLATED	3							
14	1	26106-080352	BOLT, M8X 35 PLATED	2							
15	1	114250-39450	SWITCH, 0.5KG	1							
16	1	124160-39140	BOLT, PIPE JOINT M10	1							
17	1	119802-39450	PIPE ASSY, OIL	1							
18	1	129005-59830	BOLT ASSY, JOINT M8	1							
19	2	23857-030000	BOLT, JOINT 3	1							
20	2	22190-080002	WASHER, SEAL 6	1							
21	1	22190-080002	WASHER, SEAL 6	1							
22	1	22190-100002	WASHER, SEAL 10	2							
23	1	26366-060002	NUT, M6	1							
24	1	129508-33010	COOLER ASSY, OIL	1							
25	1	129417-33110	NUT	1							
26	1	129006-35100	BRACKET ASSY, FILTER	1							
27	2	119802-35110	BRACKET, FILTER	1							
28	2	129417-35150	STUD, L=67	1							
29	1	129150-35111	GASKET	1							
30	1	129006-44480	JOINT	1							
31	1	129508-49030	PIPE ASSY, WATER	1							
32	2	171008-03990	CLIP, HOSE 18.5	1							
34	2	23080-015000	CLAMP, 15	1							
35	1	129508-49040	PIPE ASSY, WATER	1							
36	2	119940-59130	TUBE, CORRUGATED	1							
38	2	23080-015000	CLAMP, 15	1							
39	2	23080-018000	CLAMP, 18	1							

Remarks
(1) REPAIR PART.

N:Old ←Yes/No→ New. Q:Old ←No/Yes→ New. R:Old ←Yes/Yes→ New. S:Old ←No/No→ New. W:Add. Z:Discontinued. F:Interchangeable by set. K:Q'ty Change

Copyright (C) YANMAR CO., LTD. All RightsReserved.

Fig.10. COOLING WATER SYSTEM

(A)=3TNV82A-XWL
(B)=
(C)=
(D)=
(E)=
(F)=

No.	Lev.	Parts No.	Description	Q'ty (A)	(B)	(C)	(D)	(E)	(F)	I	R
1	1	119802-42000	PUMP ASSY, WATER	1							
3	2	119810-42051	GASKET, WATER PUMP	1							
4	2	119810-42120	PLATE	1							
8	2	119810-42281	GASKET, WATER PUMP	1							
9	2	119810-42290	PIPE	1							
11	2	129054-42320	O-RING	1							
13	2	23876-030000	PLUG, R03	2							
14	2	26106-060142	BOLT, M6X 14 PLATED	2							
15	2	26106-060202	BOLT, M6X 20 PLATED	2							
16	1	26106-080352	BOLT, M8X 35 PLATED	1							
17	1	26106-080552	BOLT, M8X 55 PLATED	3							
18	1	25132-003800	V-BELT, A38	1							
19	1	129403-42380	V-PULLEY, D=110	1							
20	1	129350-49530	COVER, THERMOSTAT	1							
21	1	129795-49551	GASKET	1							
22	1	121250-44901	SWITCH, 110	1							
23	1	124465-44950	GASKET, 16	2							
24	1	121450-42450	PLUG, M16	1							
25	1	26106-080222	BOLT, M8X 22 PLATED	2							
26	1	129155-49801	THERMOSTAT, 71	1							
27	1	129150-49811	GASKET, THERMOSTAT	1							
28	1	23414-080000	GASKET, 8X1.0	1							
29	1	26106-080122	BOLT, M8X 12 PLATED	1							
30	1	171340-44740	FAN, COOLING D335XNF	1							
31	1	119802-49610	PIPE ASSY, WATER	1							
32	2	119802-49711	PIPE ASSY, WATER	1							
33	2	119802-49730	RETAINER, PIPE	1							
34	2	124722-59050	CLIP, HOSE 9	2							
35	2	119802-59320	TUBE, CORRUGATED	1							
36	1	119802-49620	PIPE ASSY, WATER	1							
37	2	119802-49721	PIPE ASSY, WATER	1							
38	2	124722-59050	CLIP, HOSE 9	2							
39	1	121267-44760	SPACER	1							
40	1	26106-060302	BOLT, M6X 30 PLATED	4							
41	1	129486-42050	GASKET, WATER PUMP	1							
42	1	171056-49120	PLUG, DRAIN	1							

N:Old ◄Yes/No► New. Q:Old ◄No/Yes► New. R:Old ◄Yes/Yes► New. S:Old ◄No/No► New. W:Add. Z:Discontinued. F:Interchangeable by set. K:Q'ty Change

Copyright (C) YANMAR CO., LTD. All RightsReserved.

Fig.11. FUEL INJECTION PUMP

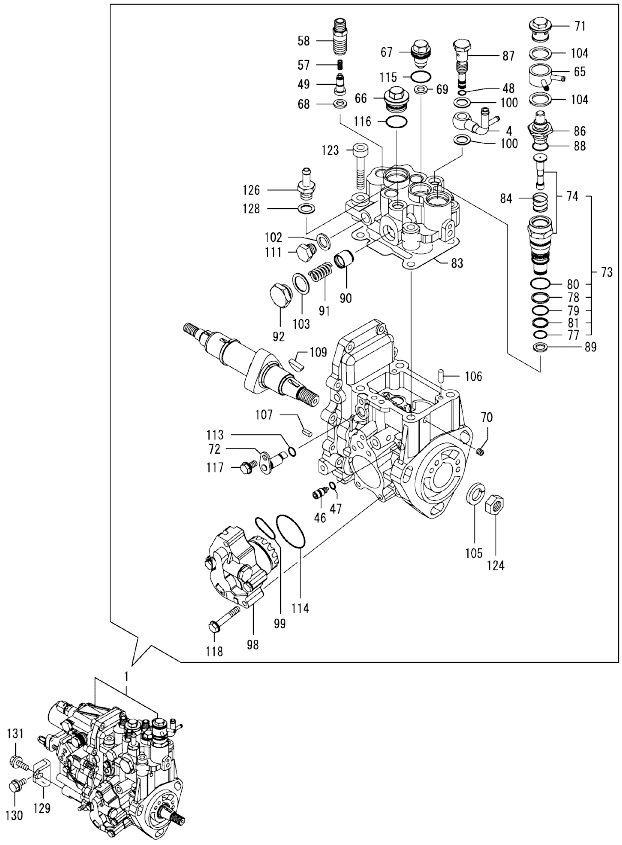

Remarks
(1) GOVERNOR ASSY(FIG.12) IS INCORPORATED IN THIS FOP.CMP (REF.NO.1).

(A)=3TNV82A-XWL (D)=
(B)= (E)=
(C)= (F)=

No.	Lev.	Parts No.	Description	Q'ty (A)	(B)	(C)	(D)	(E)	(F)	I	R
1	1	719944-51390	PUMP ASSY, INJECTION	1							1
4	2	158552-51670	JOINT, OVER FLOW	1							
46	2	158600-51270	STOPPER, TAPPET	1							
47	2	158563-51281	O-RING, 4D S6	1							
48	2	158563-51281	O-RING, 4D S6	1							
49	2	158560-51300	VALVE ASSY, DELIVERY	3							
57	2	158563-51330	SPRING, DELIVERY	3							
58	2	158601-51340	HOLDER, DELIVERY	3							
65	2	158553-51551	JOINT	1							
66	2	158601-51550	PLUG	1							
67	2	119802-51560	PLUG, BARREL	1							
68	2	158552-51570	GASKET	3							
69	2	158552-51570	GASKET	1							
70	2	158557-51570	PLUG	1							
71	2	158601-51570	PLUG	1							
72	2	158552-51580	LIFTER	1							
73	2	119802-51590	TIMER SET	1							
74	3	119802-51600	TIMER ASSY	1							
77	3	158553-51670	O-RING, 1011	1							
78	3	119802-51680	RING, BACK UP	1							
79	3	119802-51690	O-RING	1							
80	3	24356-010200	O-RING, 4D1020	1							
81	3	24372-000150	RING, BACK UP T2P15	1							
83	2	158552-51600	GASKET	1							
84	2	158553-51630	SPRING, TIMER	1							
86	2	158553-51640	ELEMENT	1							
87	2	158601-51650	JOINT, OVER FLOW	1							
88	2	158553-51660	O-RING, P14	1							
89	2	158553-51680	GASKET	1							
90	2	158601-51770	PISTON	1							
91	2	158552-51780	SPRING	1							
92	2	158601-51790	PLUG	1							
98	2	158552-52100	PUMP ASSY, FUEL FEED	1							
99	2	158552-52310	O-RING	1							
100	2	22190-120002	WASHER, SEAL 12	2							
102	2	22190-120002	WASHER, SEAL 12	1							
103	2	22190-180002	WASHER, SEAL 18	1							
104	2	22190-180002	WASHER, SEAL 18	2							
105	2	22217-140000	WASHER, SPRING 14	1							
106	2	22312-050140	PIN, PARALLEL M5X14	2							
107	2	22351-050010	PIN, SPRING 5.0X10	2							
109	2	119802-51090	KEY, 4X16	1							
111	2	23887-120002	PLUG, 12	1							
113	2	24311-000070	O-RING, 1AP7.0	1							
114	2	158552-52400	O-RING, 4E S42	1							
115	2	24356-010180	O-RING, 4D1018	1							
116	2	24356-010200	O-RING, 4D1020	1							
117	2	26106-060102	BOLT, M6X 10 PLATED	1							
118	2	158553-51770	BOLT	4							
123	2	26450-080452	BOLT, M8X 45	4							
124	2	26776-140002	NUT, LOCK M14	1							

N:Old ←Yes/No→ New. Q:Old ←No/Yes→ New. R:Old ←Yes/Yes→ New. S:Old ←No/No→ New. W:Add. Z:Discontinued. F:Interchangeable by set. K:Q'ty Change

++ CONTINUE ++

Copyright (C) YANMAR CO., LTD. All RightsReserved.

Fig.11. FUEL INJECTION PUMP

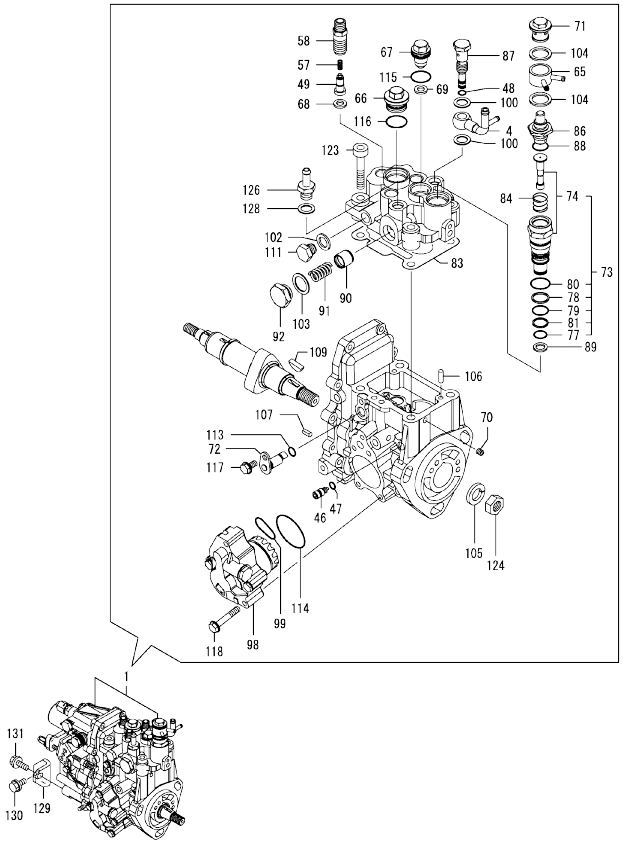

Remarks
(1) GOVERNOR ASSY(FIG.12) IS INCORPORATED IN THIS FOP.CMP (REF.NO.1).

(A)=3TNV82A-XWL (D)=
(B)= (E)=
(C)= (F)=

No.	Lev.	Parts No.	Description	Q'ty (A)	(B)	(C)	(D)	(E)	(F)	I	R
126	2	119934-59910	JOINT, PIPE	1							
128	2	22190-120002	WASHER, SEAL 12	1							
129	1	119802-51250	RETAINER, PUMP	1							
130	1	26106-080162	BOLT, M8X 16 PLATED	1							
131	1	26106-080202	BOLT, M8X 20 PLATED	1							

N:Old ←Yes/No→ New. Q:Old ←No/Yes→ New. R:Old ←Yes/Yes→ New. S:Old ←No/No→ New. W:Add. Z:Discontinued. F:Interchangeable by set. K:Q'ty Change

Copyright (C) YANMAR CO., LTD. All RightsReserved.

Fig.12. GOVERNOR

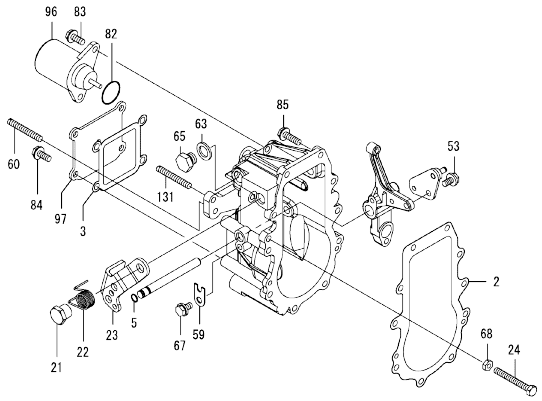

Remarks
* THIS FIGURE(GOVERNOR ASSY)IS INCORPORATED IN THE FUEL INJECTION PUMP ASSY(FIG.11).

(A)=3TNV82A-XWL (D)=
(B)= (E)=
(C)= (F)=

No.	Lev.	Parts No.	Description	Q'ty (A)	(B)	(C)	(D)	(E)	(F)	I	R
2	2	158553-61050	GASKET	1							
3	2	158553-61070	GASKET	1							
5	2	129155-51280	O-RING, S6	1							
21	2	129255-61410	NUT, LOCK	1							
22	2	119807-61420	SPRING, RETURN	1							
23	2	158552-61441	LEVER, REGULATOR	1							
24	2	129155-61460	BOLT, IDLE	1							
53	2	26106-060102	BOLT, M6X 10 PLATED	1							
59	2	119660-61901	RETAINER, SHAFT	1							
60	2	171002-66830	SCREW	1							
63	2	22190-120000	WASHER, SEAL 12	1							
65	2	23887-120002	PLUG, 12	1							
67	2	26106-060102	BOLT, M6X 10 PLATED	1							
68	2	26756-060002	NUT, LOCK M6	1							
82	2	24341-000280	O-RING, 1AS28.0	1							
82-1	2	158552-61900	O-RING	1						N	
	(A=EXXXXX)										
83	2	26106-060142	BOLT, M6X 14 PLATED	2							
84	2	26106-060142	BOLT, M6X 14 PLATED	4							
85	2	26106-060202	BOLT, M6X 20 PLATED	10							
96	2	119233-77932	SOLENOID, STOP	1							
97	2	129642-61060	COVER, GOVERNOR CASE	1							
131	2	171002-66830	SCREW	1							

N:Old ◄Yes/No► New. Q:Old ◄No/Yes► New, R:Old ◄Yes/Yes► New, S:Old ◄No/No► New, W:Add, Z:Discontinued, F:Interchangeable by set, K:Q'ty Change

Copyright (C) YANMAR CO., LTD. All RightsReserved.

Fig.13. FUEL INJECTION VALVE

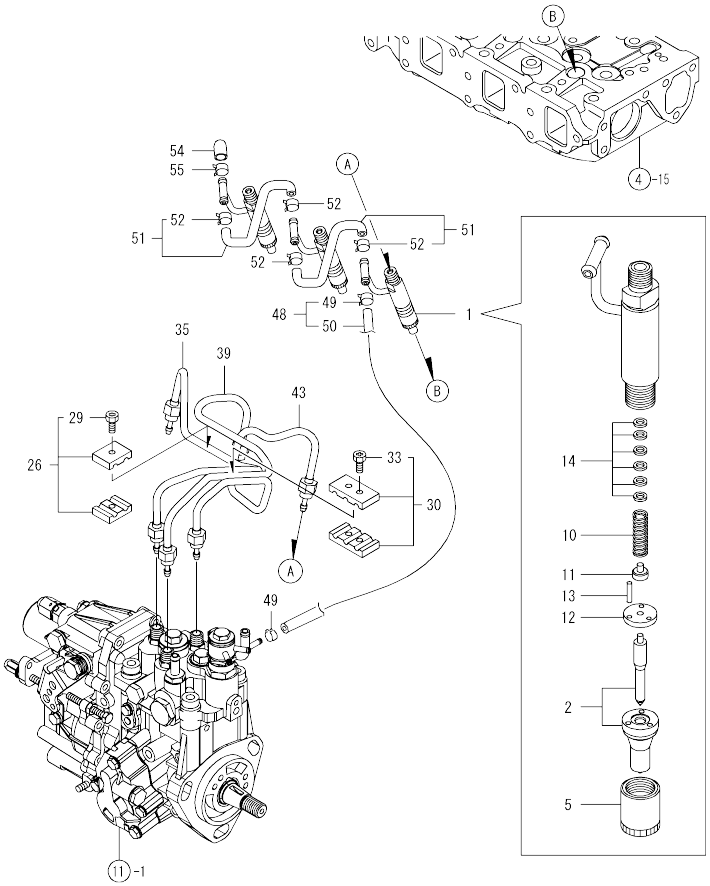

(A)=3TNV82A-XWL (D)=
(B)= (E)=
(C)= (F)=

No.	Lev.	Parts No.	Description	Q'ty (A)	(B)	(C)	(D)	(E)	(F)	I	R
1	1	729245-53100	VALVE ASSY,INJECTION	3							
2	2	129004-53001	VALVE ASSY,INJECTION	3							
5	2	114250-53080	NUT, NOZZLE D16.95	3							
10	2	114250-53120	SPRING, NOZZLE	3							
11	2	114250-53130	SEAT, SPRING	3							
12	2	114250-53140	PLATE	3							
13	2	114250-53210	PIN	6							
14	2	114250-53400	SHIM SET	3							
26	1	119305-59120	RETAINER, PIPE	1							
29	2	129150-59131	BOLT, M4X14	1							
30	1	129150-59120	RETAINER, PIPE	1							
33	2	129150-59131	BOLT, M4X14	2							
35	1	119802-59960	PIPE ASSY, INJECTION	1							
39	1	119802-59970	PIPE ASSY, INJECTION	1							
43	1	119802-59980	PIPE ASSY, INJECTION	1							
48	1	119802-59550	PIPE ASSY, RETURN	1							
49	2	124722-59050	CLIP, HOSE 9	2							
50	2	119802-59560	PIPE, FUEL RETURN	1							
51	1	129486-59551	PIPE ASSY, RETURN	2							
52	2	124722-59050	CLIP, HOSE 9	4							
54	1	119593-59580	CAP	1							
55	1	124060-77680	CLIP, HOSE 10	1							

N:Old ←Yes/No→ New. Q:Old ←No/Yes→ New, R:Old ←Yes/Yes→ New, S:Old ←No/No→ New, W:Add, Z:Discontinued, F:Interchangeable by set, K:Q'ty Change

Copyright (C) YANMAR CO., LTD. All RightsReserved.

Fig.14. FUEL LINE

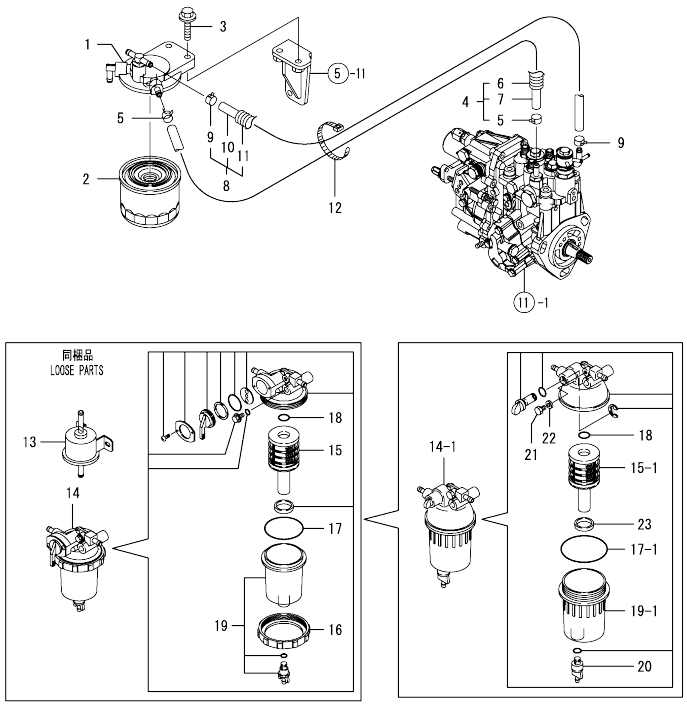

(A)=3TNV82A-XWL
(B)=
(C)=
(D)=
(E)=
(F)=

No.	Lev.	Parts No.	Description	Q'ty (A)	(B)	(C)	(D)	(E)	(F)	I	R
1	1	129004-55610	BRACKET, FILTER	1							
2	1	119802-55800	FILTER, FUEL	1							
3	1	26106-080302	BOLT, M8X 30 PLATED	2							
4	1	129457-59010	PIPE ASSY, FUEL	1							
5	2	124766-59050	CLIP, HOSE 12	2							
6	2	129957-59120	TUBE, CORRUGATED	1							
7	2	105025-59750	PIPE, FUEL	1							
8	1	129950-59231	PIPE, FUEL	1							
9	2	124766-59050	CLIP, HOSE 12	2							
10	2	171051-59050	PIPE, FUEL L=240	1							
11	2	129950-59241	TUBE, CORRUGATED	1							
12	1	121750-59890	BAND, 140	1							
13	1	119225-52102	PUMP ASSY, FUEL FEED	1							
14	1	119802-55700	SEPARATOR ASSY	1							
14-1	1	129242-55700	SEPARATOR ASSY	1							N
	(A=*2008.08.)										
15	2	119802-55710	ELEMENT	1							
15-1	2	129242-55730	ELEMENT	1							S
	(A=*2008.08.)										
16	2	129100-55690	RING, RETAINING	1							Z
	(A=*2008.08.)										
17	2	24321-000650	O-RING, 1AG65.0	1							
17-1	2	24321-000750	O-RING, 1AG75.0	1							S
	(A=*2008.08.)										
18	2	24311-000160	O-RING, 1AP16.0	1							
19	2	119802-55730	CUP ASSY	1							W
	(A=FROM 1ST)										
19-1	2	129242-55720	CUP	1							S
	(A=*2008.08.)										
20	2	129242-55740	PLUG, DRAIN	1							W
	(A=*2008.08.)										
21	2	129242-55750	VALVE, AIR VENT	1							W
	(A=*2008.08.)										
22	2	129242-55760	GASKET	1							W
	(A=*2008.08.)										
23	2	129242-55770	FLOAT	1							W
	(A=*2008.08.)										

N:Old $\xleftarrow[\text{No}]{\text{Yes}}$ New. Q:Old $\xleftarrow[\text{Yes}]{\text{No}}$ New. R:Old $\xleftarrow[\text{Yes}]{\text{Yes}}$ New. S:Old $\xleftarrow[\text{No}]{\text{No}}$ New. W:Add. Z:Discontinued. F:Interchangeable by set. K:Q'ty Change

Copyright (C) YANMAR CO., LTD. All RightsReserved.

Fig.15. STARTING MOTOR

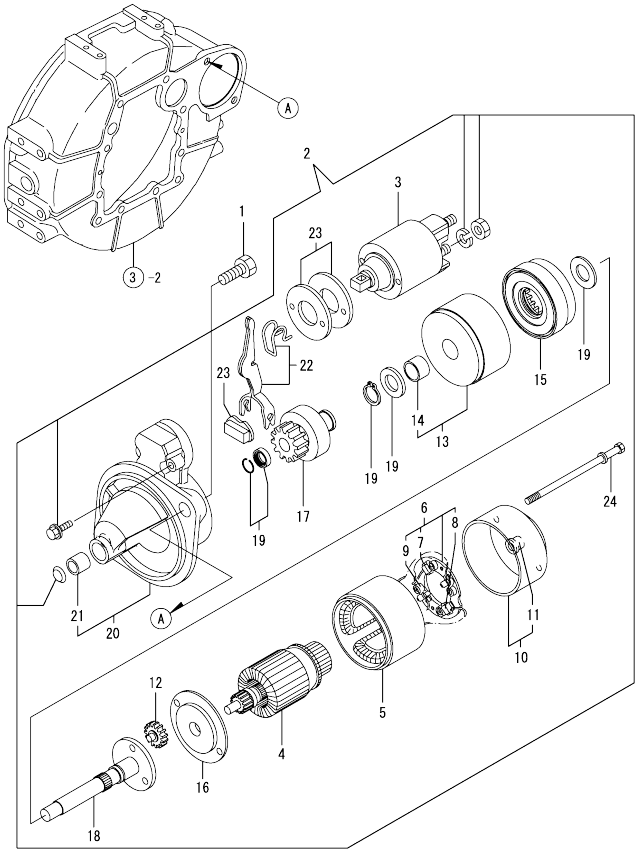

(A)=3TNV82A-XWL
(B)=
(C)=
(D)=
(E)=
(F)=

No.	Lev.	Parts No.	Description	Q'ty (A)	(B)	(C)	(D)	(E)	(F)	I	R
1	1	26116-120252	BOLT, M12X 25 PLATED	2							
2	1	129242-77010	STARTER	1							
3	2	129698-77020	MAGNETIC SWITCH ASSY	1							
4	2	129242-77100	ARMATURE ASSY	1							
5	2	129242-77110	YOKE ASSY	1							
6	2	129242-77120	BRUSH HOLDER ASSY	1							
7	3	129242-77130	BRUSH(-)	2							
8	3	129242-77140	BRUSH(+) SET	1							
9	3	129242-77150	BRUSH SPRING	4							
10	2	129242-77160	REAR COVER ASSY	1							
11	3	129242-77170	REAR COVER METAL	1							
12	2	118400-77170	GEAR	3							
13	2	129242-77180	CENTER BRACKET(P)	1							
14	3	129698-77190	BRACKET	1							
15	2	129698-77200	GEAR, INTERNAL	1							
16	2	129242-77210	CENTER BRACKET(A)	1							
17	2	129698-77220	PINION ASSY	1							
18	2	129698-77230	SHAFT(PINION	1							
19	2	129698-77250	WASHER SET	1							
20	2	129242-77260	GEAR CASE ASSY	1							
21	3	X2114535200	METAL, STARTER	1							
22	2	129242-77270	SHIFT LEVER SET	1							
23	2	129242-77280	DUST COVER KIT	1							
24	2	124195-77770	THROUGH BOLT	2							

N:Old ←Yes/No→ New. Q:Old ←No/Yes→ New. R:Old ←Yes/Yes→ New. S:Old ←No/No→ New. W:Add. Z:Discontinued. F:Interchangeable by set. K:Q'ty Change

Copyright (C) YANMAR CO., LTD. All RightsReserved.

Fig.16. GENERATOR

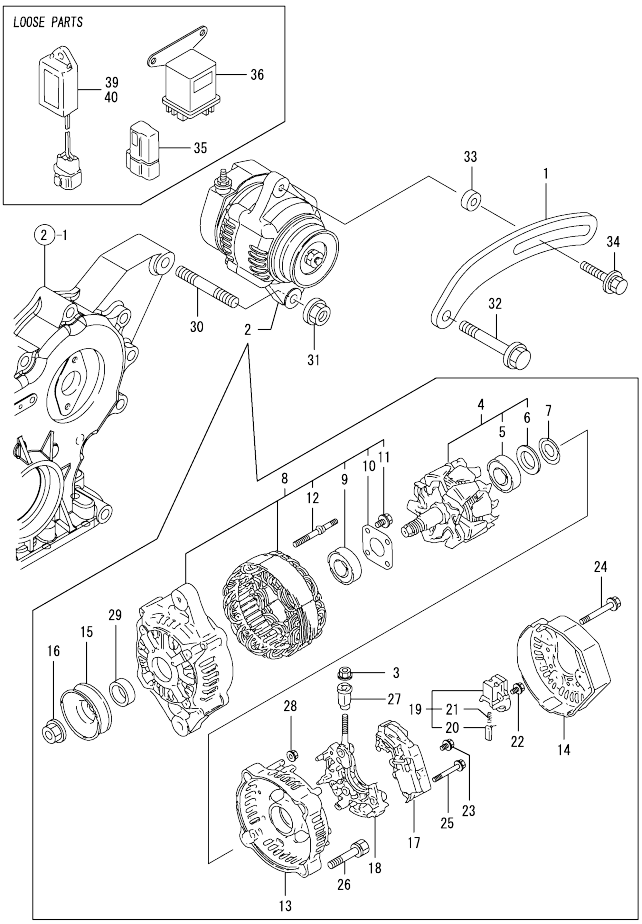

(A)=3TNV82A-XWL
(B)=
(C)=
(D)=
(E)=
(F)=

No.	Lev.	Parts No.	Description	Q'ty (A)	(B)	(C)	(D)	(E)	(F)	I	R
1	1	119802-77330	ADJUSTER	1							
2	1	129423-77200	GENERATOR, 12V-40A	1							
3	2	X9490561001	NUT	1							
4	2	119620-77380	ROTOR ASSY	1							
5	3	119620-79240	BALL BEARING	1							
6	3	119620-79250	COVER, BEARING	1							
7	2	119620-79360	WASHER, THRUST	1							
8	2	119620-77421	FRAME ASSY, DRIVE	1							
9	3	119620-79200	BALL BEARING	1							
10	3	119620-79210	PLATE	1							
11	3	119620-79220	SCREW	4							
12	3	119620-79230	BOLT, STUD	2							
13	2	119620-77440	FLAME ASSY, REAR	1							
14	2	129240-79300	COVER	1							
15	2	119620-77461	PULLEY	1							
16	2	119620-77471	NUT	1							
17	2	129423-77710	REGULATOR ASSY	1							
18	2	119620-79260	HOLDER	1							
19	2	119620-79270	HOLDER, BRUSH	1							
20	3	119620-77480	BRUSH ASSY	2							
21	3	119620-79280	SPRING	2							
22	2	119620-79290	SCREW	1							
23	2	119620-79300	SCREW	1							
24	2	119620-79310	BOLT	3							
25	2	119620-79320	SCREW W/WASHER	2							
26	2	119620-79330	BOLT	2							
27	2	119620-79340	INSULATION BUSH	1							
28	2	119620-79350	NUT	2							
29	2	119620-77490	COLLAR	1							
30	1	129795-01900	STUD	1							
31	1	26306-100002	NUT, M10	1							
32	1	26106-080452	BOLT, M8X 45 PLATED	1							
33	1	119940-77270	SPACER, GENERATOR	1							
34	1	119802-77340	BOLT, ADJUSTER	1							
35	1	119643-66900	DIODE	1							
36	1	119650-77910	RELAY ASSY, GLOW	1							
39	1	128300-77920	TIMER	1							
40	1	129211-77920	TIMER	1							

N:Old ←Yes/No→ New. Q:Old ←No/Yes→ New. R:Old ←Yes/Yes→ New. S:Old ←No/No→ New. W:Add. Z:Discontinued. F:Interchangeable by set. K:Q'ty Change

Copyright (C) YANMAR CO., LTD. All RightsReserved.

Fig.17. GASKET SET

(A)=3TNV82A-XWL
(B)=
(C)=
(D)=
(E)=
(F)=

No.	Lev.	Parts No.	Description	Q'ty (A)	(B)	(C)	(D)	(E)	(F)	I	R
1	1	719823-92850	GASKET SET	1							1
2	2	119812-01330	GASKET, HEAD	1							
3	2	121850-51960	O-RING	1							
4	2	124950-11340	SEAL, VALVE STEM	3							
5	2	119802-11870	PROTECTOR, NOZZLE	3							
6	2	119625-11880	SEAT, NOZZLE	3							
7	2	119802-11310	GASKET, BONNET	1							
8	2	129150-77511	GASKET	1							
9	2	119810-13110	GASKET	1							
10	2	129004-13200	GASKET, SILENCER	1							
11	2	124160-11340	SEAL, VALVE STEM	3							
12	2	129150-35042	GASKET	1							
13	2	129486-42050	GASKET, WATER PUMP	1							
14	2	129795-49551	GASKET	1							
15	2	129150-49811	GASKET, THERMOSTAT	1							
16	2	24311-240100	O-RING, 1AP10A	1							
17	2	22190-080002	WASHER, SEAL 6	2							
18	2	124465-44950	GASKET, 16	2							
19	2	24311-000120	O-RING, 1AP12.0	3							
20	2	24311-000320	O-RING, 1AP32.0	2							
21	2	24341-000240	O-RING, 1AS24.0	1							
22	2	22190-100002	WASHER, SEAL 10	2							
23	2	119810-12112	GASKET, MANIFOLD	1							
24	2	129150-35111	GASKET	1							
25	2	22190-220002	WASHER, SEAL 22	1							
26	2	119609-32040	O-RING, P16	4							
27	2	23414-080000	GASKET, 8X1.0	1							
28	1	129400-92420	FLEX HORN	1							1
29	1	977770-01212	GASKET, LIQUID	1							1

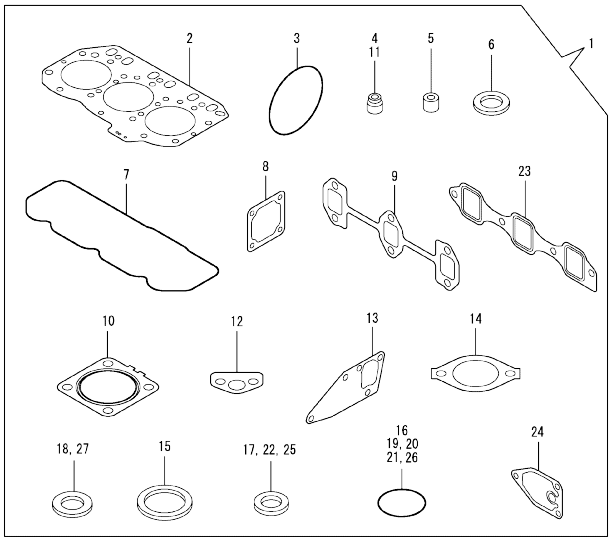

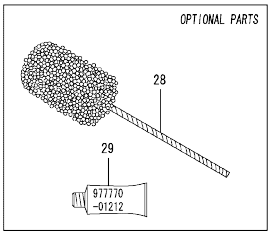

Remarks
(1) OPTIONAL PART.

N:Old ←Yes/No→ New. Q:Old ←No/Yes→ New. R:Old ←Yes/Yes→ New. S:Old ←No/No→ New. W:Add. Z:Discontinued. F:Interchangeable by set. K:Q'ty Change

Copyright (C) YANMAR CO., LTD. All RightsReserved.

Parts No. Index

Parts No.	Fig. No.	Ref. No.
104211-11180	4	27
104211-11370	4	14
105025-59750	14	7
114250-39450	9	15
114250-53080	13	5
114250-53120	13	10
114250-53130	13	11
114250-53140	13	12
114250-53210	13	13
114250-53400	13	14
118400-77170	15	12
119131-18320	6	4
119225-52102	14	13
119233-77932	12	96
119260-34810	9	2
119305-59120	13	26
119593-59580	13	54
119609-32040	2	17
	17	26
119620-01750	3	3
119620-02020	1	12
119620-77380	16	4
119620-77421	16	8
119620-77440	16	13
119620-77461	16	15
119620-77471	16	16
119620-77480	16	20
119620-77490	16	29
119620-79200	16	9
119620-79210	16	10
119620-79220	16	11
119620-79230	16	12
119620-79240	16	5
119620-79250	16	6
119620-79260	16	18
119620-79270	16	19
119620-79280	16	21
119620-79290	16	22
119620-79300	16	23
119620-79310	16	24
119620-79320	16	25
119620-79330	16	26
119620-79340	16	27
119620-79350	16	28
119620-79360	16	7
119625-11880	4	32
	17	6
119640-01640	3	9
119643-66900	16	35
119650-77910	16	36

Parts No.	Fig. No.	Ref. No.
119660-61901	12	59
119802-01190	1	38
119802-01520	2	12
119802-01560	2	13
119802-03010	4	41
119802-03090	5	1
119802-03110	4	43
119802-03121	4	44
119802-03130	4	45
119802-03141	4	46
119802-11100	4	24
119802-11110	4	25
119802-11241	4	3
119802-11251	4	4
119802-11260	4	6
119802-11270	4	7
119802-11280	4	8
119802-11310	4	49
	17	7
119802-11350	4	40
119802-11650	4	10
119802-11700	4	15
119802-11810	4	21
119802-11870	4	55
	17	5
119802-11900	4	33
119802-12140	5	3
119802-13640	6	3
119802-13740	6	6
119802-14580	7	3
119802-21002	8	1
119802-21202	8	5
119802-21650	8	9
119802-22080	8	16
119802-22500	8	18
119802-25051	7	10
119802-25070	7	14
119802-25100	7	11
119802-25901	7	17
119802-32070	2	8
119802-32100	2	7
119802-32111	2	18
119802-32120	2	19
119802-32130	2	20
119802-34821	9	1
119802-34850	9	3
119802-35110	9	27
119802-39450	9	17
119802-42000	10	1
119802-49610	10	31

Parts No.	Fig. No.	Ref. No.
119802-49620	10	36
119802-49711	10	32
119802-49721	10	37
119802-49730	10	33
119802-51090	11	109
119802-51250	11	129
119802-51560	11	67
119802-51590	11	73
119802-51600	11	74
119802-51680	11	78
119802-51690	11	79
119802-55620	5	11
119802-55700	14	14
119802-55710	14	15
119802-55730	14	19
119802-55800	14	2
119802-59320	10	35
119802-59550	13	48
119802-59560	13	50
119802-59960	13	35
119802-59970	13	39
119802-59980	13	43
119802-77330	16	1
119802-77340	16	34
119807-61420	12	22
119810-01200	1	30
119810-01730	3	6
119810-01770	3	8
119810-02870	1	32
119810-02930	1	27
119810-02940	1	35
119810-11120	4	26
119810-12112	5	6
	17	23
119810-13110	6	2
	17	9
119810-14400	7	2
119810-23200	8	29
119810-23600	8	30
119810-23610	8	32
119810-23910	8	28
119810-35300	9	7
119810-42051	10	3
119810-42120	10	4
119810-42281	10	8
119810-42290	10	9
119812-01330	1	31
	17	2
119813-22300	8	22
119865-21600	8	15

Parts No.	Fig. No.	Ref. No.
119888-13101	6	1
119934-59910	11	126
119940-59130	9	36
119940-77270	16	33
119944-49300	9	12
120270-54410	4	34
121023-01550	2	27
121111-21501	8	12
121250-44901	10	22
121267-44760	10	39
121450-42450	10	24
121750-59890	14	12
121850-21680	8	11
121850-51960	2	21
	17	3
124060-01050	1	6
124060-11800	4	19
124060-77680	13	55
124160-01751	2	14
	4	39
124160-01910	1	4
		14
124160-11340	4	28
	17	11
124160-11360	4	52
124160-39140	9	16
124195-77770	15	24
124240-01871	2	15
124465-44950	10	23
	17	18
124722-59050	10	34
		38
	13	49
		52
124766-59050	14	5
		9
124950-11340	4	29
	17	4
128300-77920	16	39
129001-01250	1	7
129001-11340	5	4
129001-32330	2	11
129001-91841	2	22
129004-13200	6	7
	17	10
129004-53001	13	2
129004-55610	14	1
129005-59830	9	18
129006-35100	9	26
129006-44480	9	30

Parts No. Index

Parts No.	Fig. No.	Ref. No.
129054-42320	10	11
129100-01580	3	1
		14
	8	2
129100-01640	3	15
129100-55690	14	16
129120-77501	5	8
129150-02450	7	4
129150-03070	4	42
129150-11230	4	11
129150-11280	4	9
129150-11750	4	13
129150-14101	7	7
129150-14200	7	1
129150-25301	7	16
129150-35042	9	6
	17	12
129150-35111	9	29
	17	24
129150-35170	9	11
129150-49811	10	27
	17	15
129150-59120	13	30
129150-59131	13	29
		33
129150-77511	5	9
	17	8
129155-49801	10	26
129155-51280	12	5
129155-61460	12	24
129211-77920	16	40
129240-79300	16	14
129242-55700	14	14 -1
129242-55720	14	19 -1
129242-55730	14	15 -1
129242-55740	14	20
129242-55750	14	21
129242-55760	14	22
129242-55770	14	23
129242-77010	15	2
129242-77100	15	4
129242-77110	15	5
129242-77120	15	6
129242-77130	15	7
129242-77140	15	8
129242-77150	15	9
129242-77160	15	10
129242-77170	15	11
129242-77180	15	13
129242-77210	15	16

Parts No.	Fig. No.	Ref. No.
129242-77260	15	20
129242-77270	15	22
129242-77280	15	23
129255-61410	12	21
129350-49530	10	20
129400-92420	17	28
129403-42380	10	19
129410-03990	5	2
129417-33110	9	25
129417-35150	9	28
129418-32320	2	10
129423-77200	16	2
129423-77710	16	17
129457-59010	14	4
129486-01670	3	18
129486-42050	10	41
	17	13
129486-59551	13	51
129489-21590	8	13
129508-33010	9	24
129508-49030	9	31
129508-49040	9	35
129612-01600	3	2
129642-61060	12	97
129698-77020	15	3
129698-77190	15	14
129698-77200	15	15
129698-77220	15	17
129698-77230	15	18
129698-77250	15	19
129792-22400	8	23
129795-01780	3	17
129795-01800	2	6
129795-01900	16	30
129795-01950	2	16
129795-02411	1	13
129795-21661	8	10
129795-49551	10	21
	17	14
129900-07900	4	1
129900-32130	2	9
129950-59231	14	8
129950-59241	14	11
129957-59120	14	6
158552-51151	7	18
158552-51570	11	68
		69
158552-51580	11	72
158552-51600	11	83
158552-51670	11	4

Parts No.	Fig. No.	Ref. No.
158552-51780	11	91
158552-52100	11	98
158552-52310	11	99
158552-52400	11	114
158552-61441	12	23
158552-61900	12	82 -1
158553-51551	11	65
158553-51630	11	84
158553-51640	11	86
158553-51660	11	88
158553-51670	11	77
158553-51680	11	89
158553-51770	11	118
158553-61050	12	2
158553-61070	12	3
158557-51570	11	70
158560-51300	11	49
158563-51281	11	47
		48
158563-51330	11	57
158600-51270	11	46
158601-51340	11	58
158601-51550	11	66
158601-51570	11	71
158601-51650	11	87
158601-51770	11	90
158601-51790	11	92
171002-66830	12	60
		131
171008-03990	9	32
171051-01921	1	5
171051-59050	14	10
171056-49120	10	42
171340-44740	10	30
22190-080002	9	20
		21
	17	17
22190-100002	9	22
	17	22
22190-120000	12	63
22190-120002	11	100
		102
		128
22190-180002	11	103
		104
22190-220002	3	11
	17	25
22217-140000	7	19
	11	105
22312-050140	11	106

Parts No.	Fig. No.	Ref. No.
22351-030010	8	8
22351-050010	11	107
22351-060012	4	35
22512-070140	7	8
	8	6
22857-500100	4	50
		51
23080-015000	9	34
		38
23080-018000	9	39
23414-080000	10	28
	17	27
23857-030000	9	19
23876-030000	2	4
	10	13
23876-040000	2	5
23887-120002	11	111
	12	65
24311-000070	11	113
24311-000120	4	53
	17	19
24311-000160	14	18
24311-000320	2	23
	4	54
	17	20
24311-240100	9	4
	17	16
24321-000650	14	17
24321-000750	14	17 -1
24341-000240	2	28
	17	21
24341-000280	12	82
24356-010180	11	115
24356-010200	11	80
		116
24372-000150	11	81
25132-003800	10	18
26106-060102	11	117
	12	53
		67
26106-060142	10	14
	12	83
		84
26106-060162	2	29
26106-060202	10	15
	12	85
26106-060302	10	40
26106-080122	10	29
26106-080142	4	2
	7	9

Parts No. Index

Parts No.	Fig. No.	Ref. No.
26106-080162	2	24
		25
	3	12
	5	12
	9	5
	11	130
26106-080202	9	13
	11	131
26106-080222	10	25
26106-080252	4	36
	5	7
26106-080302	14	3
26106-080352	3	7
	5	10
	9	14
	10	16
26106-080402	7	15
26106-080452	3	13
	4	37
	16	32
26106-080502	4	38
26106-080552	2	26
	10	17
26116-120252	15	1
26206-100252	3	4
26206-100302	3	5
26306-080002	2	31
	6	5
26306-100002	16	31
26366-060002	9	23
26450-080452	11	123
26756-060002	12	68
26776-140002	7	20
	11	124
27241-120000	1	8
27241-300000	1	9
27241-400000	4	23
27310-070001	4	30
719802-01500	2	1
719802-01560	1	1
719802-22900	8	34
719802-22950	8	36
719810-02980	1	24
719810-23100	8	24
719823-92850	17	1
719944-51390	11	1
729245-53100	13	1
977770-01212	2	30
	3	19
	4	56

Parts No.	Fig. No.	Ref. No.
977770-01212	17	29
X2114535200	15	21
X9490561001	16	3

Parts No.	Fig. No.	Ref. No.

Parts No.	Fig. No.	Ref. No.