YANMAR

PARTS CATALOG

0CW10-M56900EN

Last update Mar., 2013

PREFACE

1. This parts catalog is the 1st edition of 4TNV98T-GECS for ELCOS.

Pub.No. : 0CW10-G56900
Published : September, 2009

2. Model name

Engine model	Vehicle	Vehicle made by
4TNV98T-GECS	GENERATOR	ELCOS

Directions for the Parts Catalog.

1.The parts stipulated in this Parts Catalog are not necessarily standard equipped parts.
2.Parts may change without prior notice.
3.The following is an example of the Parts Catalog format.

0CF10-G21601 29. FUEL INJECTION PUMP(W/BOOST)

(A)=4JH-DT
(B)=4JH-DTZ
(C)=4JH-DTZP
(D)=4JH-DTZA
(E)=4JH-DTZY
(F)=

① REF.	② LEV.	PARTS NO.	DESCRIPTION	Q'TY (A)	(B)	(C)	(D)	(E)	(F)	③ I	⑤ R
1	1	729595-51390	FUEL INJECTION PUMP	1	1	1	1	1			1
1-1	1	729595-51391	FUEL INJECTION PUMP	1	1	1	1	1		N	1
	(A=E00185)	(B=E00200)									
3	2	26022-060162	SCREW M 6X 16	9	9	9	9	9			
3-1 ④	2	26022-060162	SCREW M 6X 16	4	4	4	4	4		K	
	(A=E00156)	(B=E00156)	(C=E00156) (D=E00156)	(E=E00156)							
4	2	129470-51040	CAMSHAFT	1	1	1	1	1			
5	2	122710-51050	BEARING, ROLLER	2	2	2	2	2			
6	2	129470-51060	RETAINER	1	1	1	1	1			

Remarks
(1) BOOST COMPEMSATOR TYPE. OPTIONAL
PART, TO E00155,(4JH-DT, 4JH-DTZ

① Ref. No.

The Ref. No. listed may not be in accordance with the illustration Ref. No.

(Ex.) Illustration No. 1 List Ref No. 1 (Before change) → 1- 1 (After change)

For interchangeable symbols N, R and K, illustrations for new parts may be abbreviated.

② Lev. (Level)

Level indication
The numbers below indicate the level of relativity towards the main part.
1 ----- Main parts (Assembly parts)
2 ----- Sub component included in " 1 ".
3 ----- Sub component included in " 2 ".
Note) Parts that are not for sale are partially illustrated but not listed.

③ Interchangeability Mark

When a part change takes place, one of the following interchangeability symbols is indicated beside the part.

Symbol	Interchangeability	Contents note
N	Old ← Yes / No → New	New Part is interchangeable for Old Part but Old Part is not interchangeable for New Part.
Q	Old ← No / Yes → New	New Part is not interchangeable for Old Part but Old Part is interchangeable for New Part.
R	Old ← Yes / Yes → New	New/ Old Parts are both interchangeable.
S	Old ← No / No → New	New/ Old Parts are both not interchangeable.
W		Part newly added.
Z		Part discontinued.
F		Not interchangeable by a single part but interchangeable together with related parts.
K		Changes only for used parts quantities.

④ Effective Machine No.

When a part changes, the effective Machine No. will be indicated in the (A)-(F) column.

Product Symbol	Product No.	Product Symbol	Product No.
C	Clutch No. Compressor No.	F	Machine No. (Agricultural Equip.)
D	Drive No.	M	Machine No.
E	Engine No.		

Note 1) A date may follow the symbol. (Ex.) 1996.01
Note 2) " XXXXX " and " ZZZZZ " are for parts that could not be predicted or for engine models that could not be identified.
Note 3) (A=E00185) is the E (Engine Serial Number) for the column (A) model (in this case 4JH-DT) after the parts design change.

⑤ Remarks Mark

Figures or alphabets (symbols) are entered in the remarks column.
The comments (remarks) on parts that are indicated at the bottom of the illustration are the same symbols as those stated above.

Contents

0CW10-M56900

Fig. No.	Fig. Name
4TNV98T-GECS	
1.	CYLINDER BLOCK
2.	GEAR HOUSING
3.	FLYWHEEL HOUSING & OIL SUMP
4.	CYLINDER HEAD & BONNET
5.	SUCTION MANIFOLD & AIR CLEANER
6.	EXHAUST MANIFOLD
7.	CAMSHAFT & DRIVING GEAR
8.	TURBINE
9.	CRANKSHAFT & PISTON
10.	LUB.OIL SYSTEM
11.	LUB.OIL LINE
12.	COOLING WATER SYSTEM
13.	FUEL INJECTION PUMP
14.	GOVERNOR
15.	FUEL INJECTION VALVE
16.	FUEL LINE
17.	STARTING MOTOR
18.	GENERATOR
19.	GASKET SET & TOOLS

Fig.1. CYLINDER BLOCK

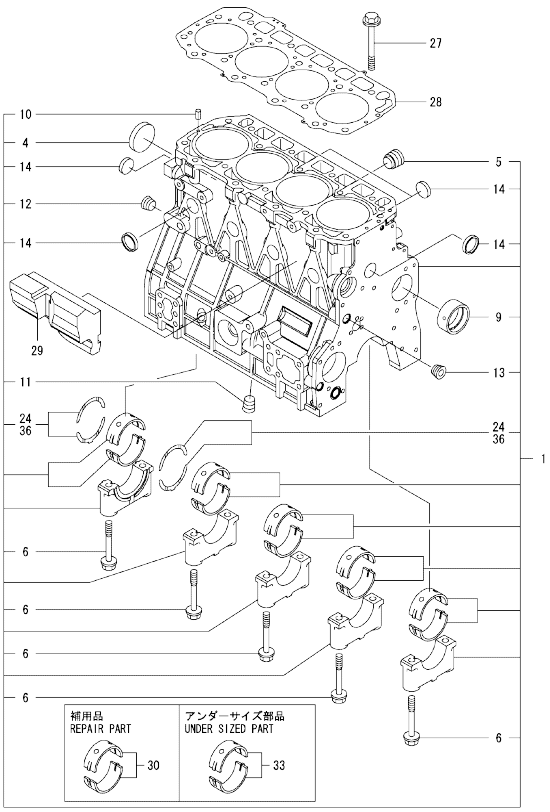

Remarks
(1)REPAIR PART.
(2)UNDER SIZED(U.S.=0.25)PART.
(3)OVER SIZED(O.S.=0.25)PART.

(A)=4TNV98T-GECS
(B)=
(C)=
(D)=
(E)=
(F)=

No.	Lev.	Parts No.	Description	Q'ty (A)	(B)	(C)	(D)	(E)	(F)	I	R
1	1	729908-01560	BLOCK ASSY, CYLINDER	1							
4	2	129900-01250	PLUG, DISH TYPE 55	1							
5	2	171051-01921	PLUG, NPTF1	1							
6	2	129900-02020	BOLT, METAL CAP	10							
9	2	129900-02410	BUSH, CAMSHAFT	1							
10	2	22351-060012	PIN, SPRING 6.0X12	2							
11	2	23876-030000	PLUG, R03	1							
12	2	23876-030000	PLUG, R03	1							
13	2	23876-030000	PLUG, R03	1							
14	2	27241-300000	PLUG 30	8							
24	2	129900-02931	BEARING ASSY, THRUST	2							
27	1	129900-01200	BOLT, CYLINDER HEAD	18							
28	1	129907-01331	GASKET, HEAD	1							
29	1	129907-01190	SPACER	1							
30	1	729900-02801	BEARING, MAIN	5							1
33	1	129900-02341	BEARING ASSY, MAIN	5							2
36	1	129900-02941	BEARING, THRUST 0.25	2							3

N:Old $\frac{\text{Yes}}{\text{No}}$ New. Q:Old $\frac{\text{No}}{\text{Yes}}$ New. R:Old $\frac{\text{Yes}}{\text{Yes}}$ New. S:Old $\frac{\text{No}}{\text{No}}$ New. W:Add. Z:Discontinued. F:Interchangeable by set. K:Q'ty Change

Copyright (C) YANMAR GLOBAL CS CO., LTD. All RightsReserved.

Fig.2. GEAR HOUSING

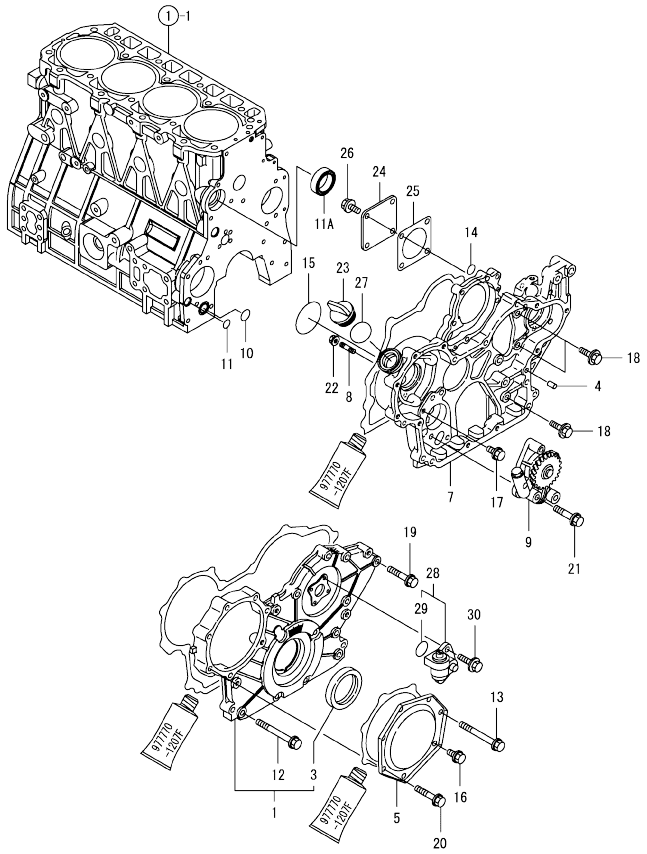

(A)=4TNV98T-GECS (D)=
(B)= (E)=
(C)= (F)=

No.	Lev.	Parts No.	Description	Q'ty (A)	(B)	(C)	(D)	(E)	(F)	I	R
1	1	729907-01530	COVER ASSY,GEAR CASE	1							
3	2	129916-01800	SEAL, OIL	1							
4	1	129100-01580	PIN, PARALLEL 8X16	4							
5	1	129900-01740	COVER	1							
7	1	129908-01500	CASE, GEAR	1							
8	1	26216-100302	STUD, M10X 30	4							
9	1	129908-32060	PUMP ASSY, OIL	1							
10	1	129900-32030	O-RING, P20	1							
11	1	129900-32040	O-RING, P14	1							
11A	1	129927-42140	GASKET, PUMP OUTLET	1						W	
	(A=EU2013)										
12	1	26106-080702	BOLT, M8X 70 PLATED	6							
13	1	26106-080702	BOLT, M8X 70 PLATED	1							
14	1	24311-000070	O-RING, 1AP7.0	1							
15	1	24351-030750	O-RING, 1A3075	1							
16	1	26106-080162	BOLT, M8X 16 PLATED	1							
17	1	26106-080162	BOLT, M8X 16 PLATED	1							
18	1	26106-080202	BOLT, M8X 20 PLATED	3							
19	1	26106-080402	BOLT, M8X 40 PLATED	5							
20	1	26106-080402	BOLT, M8X 40 PLATED	5							
21	1	26106-080452	BOLT, M8X 45 PLATED	3							
22	1	26306-100002	NUT, M10	4							
23	1	124160-01751	CAP, FILLER	1							
24	1	124240-01871	COVER, PUMP	1							
25	1	124240-01883	GASKET	1							
26	1	26106-080162	BOLT, M8X 16 PLATED	4							
27	1	24311-000320	O-RING, 1AP32.0	1							
28	1	129150-91400	GEAR	1							
29	2	24341-000240	O-RING, 1AS24.0	1							
30	1	26106-060162	BOLT, M6X 16 PLATED	2							

N:Old ←Yes/No→ New. Q:Old ←No/Yes→ New. R:Old ←Yes/Yes→ New. S:Old ←No/No→ New. W:Add. Z:Discontinued. F:Interchangeable by set. K:Q'ty Change

Copyright (C) YANMAR GLOBAL CS CO., LTD. All RightsReserved.

Fig.3. FLYWHEEL HOUSING & OIL SUMP

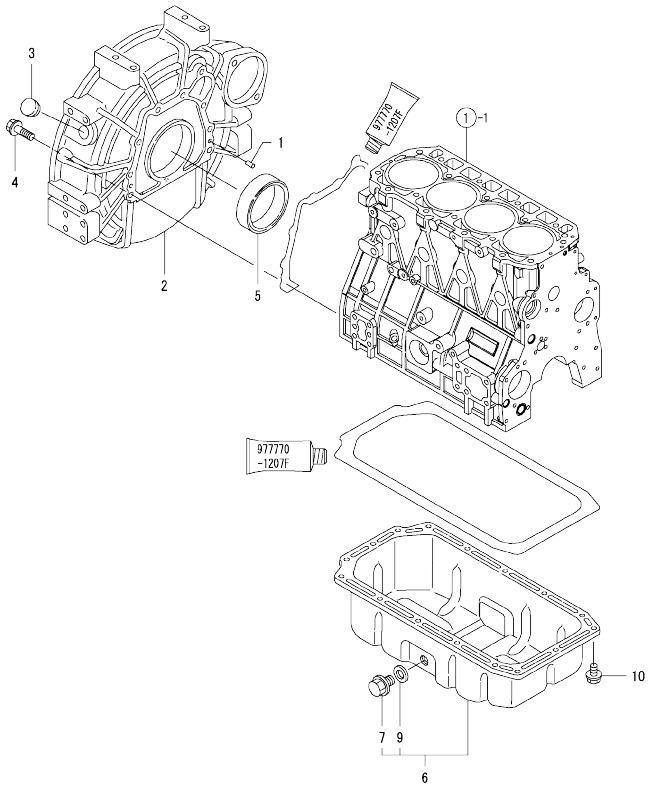

(A)=4TNV98T-GECS (D)=
(B)= (E)=
(C)= (F)=

No.	Lev.	Parts No.	Description	Q'ty (A)	(B)	(C)	(D)	(E)	(F)	I	R
1	1	129100-01580	PIN, PARALLEL 8X16	2							
2	1	129915-01610	HOUSING, FLYWHEEL	1							
3	1	119000-01840	PLUG, RUBBER	1							
4	1	26206-100352	BOLT, M10X 35 PLATED	9							
5	1	124411-01780	SEAL, HTC95X115X12	1							
5-1	1	129916-01790	SEAL, D115/95XT11	1						N	
	(A=EZZZZZ)										
6	1	129982-01710	OIL PAN ASSY	1							
7	2	119640-01640	PLUG, DRAIN M22	1							
9	2	22190-220002	WASHER, SEAL 22	1							
10	1	26106-080122	BOLT, M8X 12 PLATED	16							

N:Old ←Yes/No→ New. Q:Old ←No/Yes→ New. R:Old ←Yes/Yes→ New. S:Old ←No/No→ New. W:Add. Z:Discontinued. F:Interchangeable by set. K:Q'ty Change

Copyright (C) YANMAR GLOBAL CS CO., LTD. All RightsReserved.

Fig.4. CYLINDER HEAD & BONNET

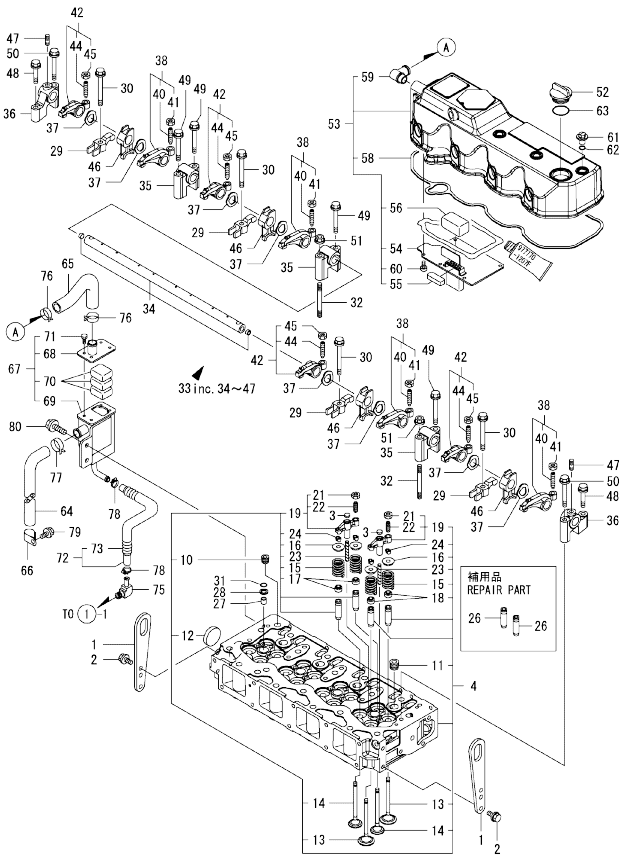

(A)=4TNV98T-GECS
(B)=
(C)=
(D)=
(E)=
(F)=

No.	Lev.	Parts No.	Description	Q'ty (A)	(B)	(C)	(D)	(E)	(F)	I	R
1	1	129907-07900	LIFTER, ENGINE	2							
2	1	26106-080162	BOLT, M8X 16 PLATED	4							
3	1	123907-11550	SEAT, VALVE BRIDGE	8							
4	1	129908-11700	HEAD ASSY, CYLINDER	1							
10	2	23876-020000	PLUG, R02	1							
11	2	23876-030000	PLUG, R03	4							
12	2	27241-400000	PLUG, 40	1							
13	2	129907-11100	VALVE, SUCTION	8							
14	2	129907-11110	VALVE, EXHAUST	8							
15	2	129907-11120	SPRING, VALVE	16							
16	2	119620-11180	RETAINER, SPRING	16							
17	2	119803-11340	SEAL, VALVE STEM	8							
18	2	124160-11340	SEAL, VALVE STEM	8							
19	2	129907-11510	BRIDGE ASSY, VALVE	8							
21	3	129150-11750	NUT, M8	8							
22	3	123907-11830	ADJUSTER	8							
23	2	123907-11820	GUIDE, BRIDGE	8							
24	2	27310-070001	COTTER, 7	16							
26	1	129907-11800	GUIDE, VALVE	16							1
27	1	119802-11870	PROTECTOR, NOZZLE	4							
28	1	119625-11880	SEAT, NOZZLE	4							
29	1	129907-11910	RETAINER, NOZZLE	4							
30	1	129907-11950	BOLT, M8X75	4							
31	1	24311-000120	O-RING, 1AP12.0	4							
32	1	119593-11301	BOLT, STUD M8X80	2							
33	1	129907-11341	SHAFT ASSY, ROCKER	1							
34	2	129907-11250	SHAFT, ROCKER ARM	1							
35	2	129907-11260	SUPPORT, ROCKER ARM	3							
36	2	129907-11270	SUPPORT, ROCKER ARM	2							
37	2	123907-11280	WASHER	8							
38	2	129907-11650	ARM ASSY, ROCKER	4							
40	3	129150-11230	SCREW, VALVE ADJUST	4							
41	3	129150-11750	NUT, M8	4							
42	2	129907-11660	ARM ASSY, ROCKER	4							
44	3	129150-11230	SCREW, VALVE ADJUST	4							
45	3	129150-11750	NUT, M8	4							
46	2	129907-11920	RETAINER, NOZZLE	4							
47	2	26226-080222	STUD, M8X 22	2							
48	1	26106-080402	BOLT, M8X 40 PLATED	2							
49	1	26106-080602	BOLT, M8X 60 PLATED	4							
50	1	26106-080602	BOLT, M8X 60 PLATED	2							
51	1	26306-080002	NUT, M8	2							
52	1	124160-01751	CAP, FILLER	1							
53	1	129933-11320	BONNET ASSY, HEAD	1							
54	2	129907-03011	PLATE, BAFFLE	1							
55	2	129907-03061	BAFFLE, BREATHER	1							
56	2	129907-03070	BAFFLE, BREATHER	1							
58	2	129933-11310	GASKET, BONNET	1							
59	2	119100-11330	ELBOW, BREATHER	1							
60	2	22857-500100	SCREW, 5X10	6							
61	1	124160-11360	KNOB	4							

Remarks
(1)REPAIR PART.

N:Old ←Yes/No→ New. Q:Old ←No/Yes→ New. R:Old ←Yes/Yes→ New. S:Old ←No/No→ New. W:Add. Z:Discontinued. F:Interchangeable by set. K:Q'ty Change

++ CONTINUE ++

Copyright (C) YANMAR GLOBAL CS CO., LTD. All RightsReserved.

Fig.4. CYLINDER HEAD & BONNET

(A)=4TNV98T-GECS
(B)=
(C)=
(D)=
(E)=
(F)=

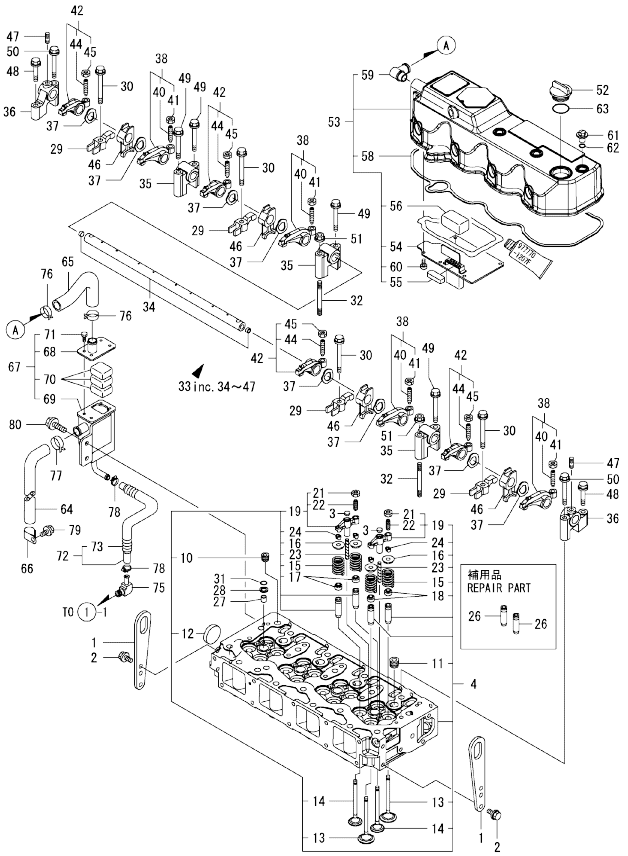

No.	Lev.	Parts No.	Description	Q'ty (A)	(B)	(C)	(D)	(E)	(F)	I	R
62	1	24311-000120	O-RING, 1AP12.0	4							
63	1	24311-000320	O-RING, 1AP32.0	1							
64	1	119006-03090	HOSE, BREATHER	1							
65	1	129908-03099	HOSE, BREATHER	1							
66	1	129150-03100	RETAINER, PIPE	1							
67	1	129908-03230	BREATHER ASSY	1							
68	2	129908-03240	COVER, BREATHER	1							
69	2	129908-03250	BREATHER	1							
70	2	123901-03240	FILTER	3							
71	2	26116-050102	BOLT, M5X 10 PLATED	4							
72	1	129935-03260	HOSE ASSY, RETURN	1							
73	2	129935-03270	TUBE, CORRUGATED	1							
75	1	123901-03280	ELBOW, PT3/8-10	1							
76	1	129410-03990	CLAMP, HOSE 21.5	2							
77	1	129960-03990	CLAMP, HOSE 19.8	1							
78	1	23000-022000	CLAMP, 22	2							
79	1	26106-080122	BOLT, M8X 12 PLATED	1							
80	1	26106-080142	BOLT, M8X 14 PLATED	2							

Remarks
(1)REPAIR PART.

N:Old $\frac{\text{Yes}}{\text{No}}$ New. Q:Old $\frac{\text{No}}{\text{Yes}}$ New. R:Old $\frac{\text{Yes}}{\text{Yes}}$ New. S:Old $\frac{\text{No}}{\text{No}}$ New. W:Add. Z:Discontinued. F:Interchangeable by set. K:Q'ty Change

Copyright (C) YANMAR GLOBAL CS CO., LTD. All RightsReserved.

Fig.5. SUCTION MANIFOLD & AIR CLEANER

(A)=4TNV98T-GECS
(B)=
(C)=
(D)=
(E)=
(F)=

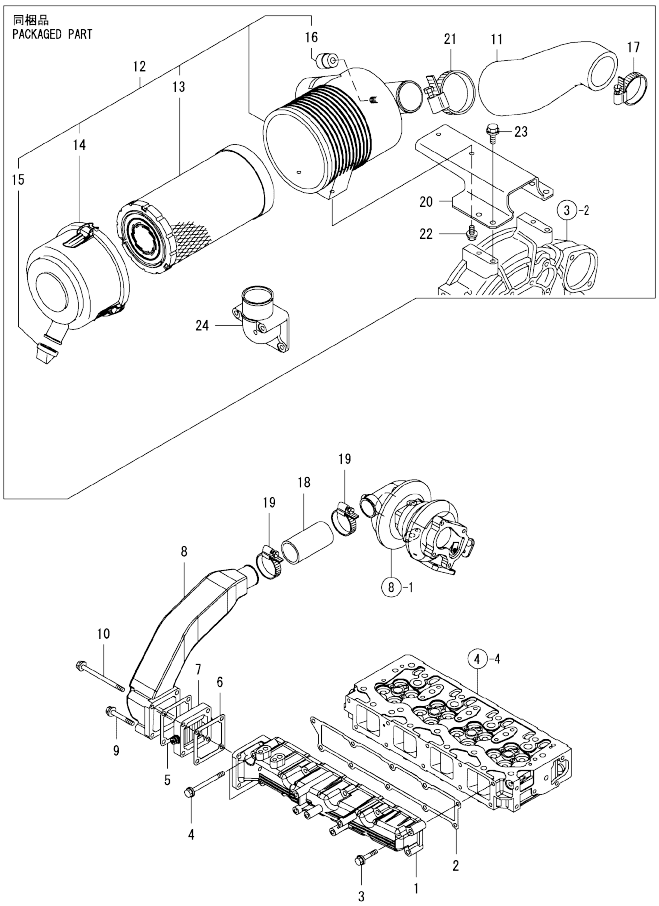

No.	Lev.	Parts No.	Description	Q'ty (A)	(B)	(C)	(D)	(E)	(F)	I	R
1	1	129944-12110	MANIFOLD, AIR INTAKE	1							
2	1	129907-12110	GASKET, MANIFOLD	1							
3	1	26106-080452	BOLT, M8X 45 PLATED	8							
4	1	26106-080802	BOLT, M8X 80 PLATED	2							
5	1	119129-77020	GASKET	1							
6	1	121850-77021	GASKET, AIR HEATER	1							
7	1	119005-77051	HEATER, AIR	1							
8	1	129935-18350	DUCT, AIR	1							
9	1	26106-080702	BOLT, M8X 70 PLATED	2							
10	1	26106-080902	BOLT, M8X 90 PLATED	2							
11	1	129937-12550	PIPE, AIR INTAKE	1							
12	1	129946-12500	CLEANER ASSY, AIR	1							
12-1	1	129946-12520	CLEANER ASSY, AIR	1						N	
	(A=EZZZZZ)										
13	2	129935-12520	ELEMENT, OUTER	1							
14	2	119160-12530	COVER ASSY	1							
15	2	119160-12540	VALVE	1							
16	2	126650-12680	INDICATOR	1							
17	1	23000-060000	CLAMP, 60	1							
18	1	123951-18220	JOINT, RUBBER	1							
19	1	23000-054000	CLAMP, 54	2							
20	1	129946-12600	BRACKET, AIR CLEANER	1							
21	1	23000-080000	CLAMP, 80	1							
22	1	26106-080162	BOLT, M8X 16 PLATED	2							
23	1	26106-100162	BOLT, M10X 16 PLATED	4							
24	1	119129-77520	BEND	1							

N:Old ←Yes/No→ New. Q:Old ←No/Yes→ New. R:Old ←Yes/Yes→ New. S:Old ←No/No→ New. W:Add. Z:Discontinued. F:Interchangeable by set. K:Q'ty Change

Copyright (C) YANMAR GLOBAL CS CO., LTD. All RightsReserved.

Fig.6. EXHAUST MANIFOLD

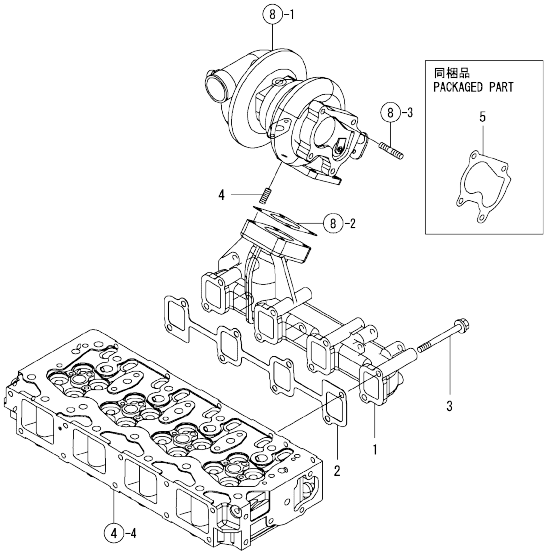

(A)=4TNV98T-GECS (D)=
(B)= (E)=
(C)= (F)=

No.	Lev.	Parts No.	Description	Q'ty (A)	(B)	(C)	(D)	(E)	(F)	I	R
1	1	129935-13100	MANIFOLD, EXHAUST	1							
2	1	129900-13251	GASKET, EXH.MANIFOLD	1							
3	1	123900-13630	BOLT, M8X80	8							
4	1	129418-18320	BOLT, STUD M8X20	4							
5	1	123901-18080	GASKET	1							

N:Old ◄Yes/No► New. Q:Old ◄No/Yes► New. R:Old ◄Yes/Yes► New. S:Old ◄No/No► New. W:Add. Z:Discontinued. F:Interchangeable by set. K:Q'ty Change

Copyright (C) YANMAR GLOBAL CS CO., LTD. All RightsReserved.

Fig.7. CAMSHAFT & DRIVING GEAR

(A)=4TNV98T-GECS
(B)=
(C)=
(D)=
(E)=
(F)=

No.	Lev.	Parts No.	Description	Q'ty (A)	(B)	(C)	(D)	(E)	(F)	I	R
1	1	129150-14200	TAPPET	8							
2	1	129907-14400	PUSH-ROD	8							
3	1	129908-14581	CAMSHAFT ASSY	1							
4	2	129150-02450	BEARING, THRUST	1							
6	2	129900-14100	GEAR, CAMSHAFT	1							
7	2	22512-070140	KEY, 7X 14	1							
8	1	26106-080162	BOLT, M8X 16 PLATED	2							
9	1	123900-25060	SHAFT, IDLE GEAR	1							
10	1	129900-25100	GEAR ASSY, IDLE	1							
13	1	129150-25920	BUSH, IDLE GEAR	1							1
14	1	26106-080552	BOLT, M8X 55 PLATED	3							
15	1	129953-25300	BOLT	4							
16	1	129907-25900	GEAR, PUMP	1							

Remarks
(1)REPAIR PART.

N:Old ←Yes/No→ New. Q:Old ←No/Yes→ New. R:Old ←Yes/Yes→ New. S:Old ←No/No→ New. W:Add. Z:Discontinued. F:Interchangeable by set. K:Q'ty Change

Copyright (C) YANMAR GLOBAL CS CO., LTD. All RightsReserved.

Fig.8. TURBINE

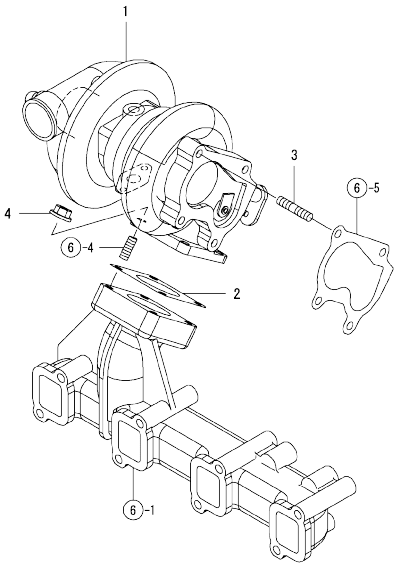

(A)=4TNV98T-GECS (D)=
(B)= (E)=
(C)= (F)=

No.	Lev.	Parts No.	Description	Q'ty (A)	(B)	(C)	(D)	(E)	(F)	I	R
1	1	129935-18010	TURBOCHARGER, RHF5	1							
2	1	129472-18090	GASKET	1							
3	1	119131-18320	BOLT, STUD M8X22	4							
4	1	26306-080002	NUT, M8	4							

N:Old ◄Yes/No► New. Q:Old ◄No/Yes► New. R:Old ◄Yes/Yes► New. S:Old ◄No/No► New. W:Add. Z:Discontinued. F:Interchangeable by set. K:Q'ty Change

Copyright (C) YANMAR GLOBAL CS CO., LTD. All RightsReserved.

Fig.9. CRANKSHAFT & PISTON

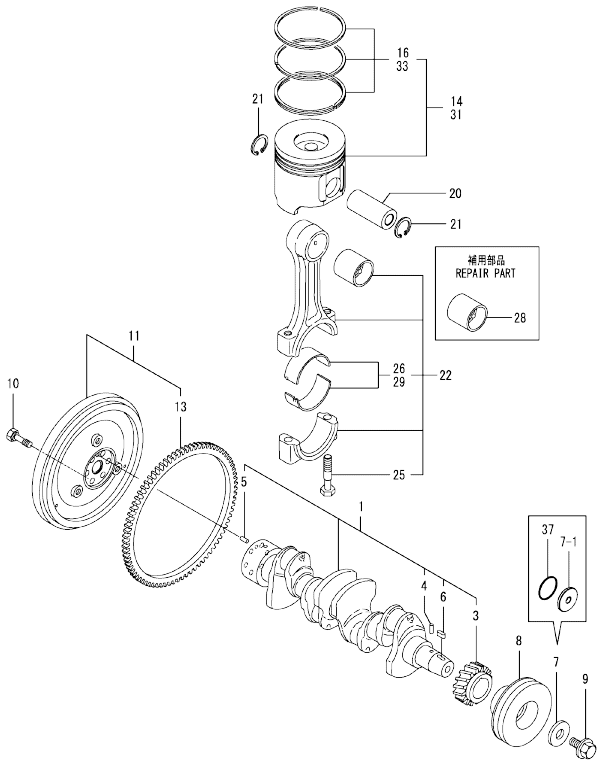

Remarks
(1)REPAIR PART.
(2)UNDER SIZED(U.S.=0.25)PART.
(3)OVER SIZED(O.S.=0.25)PART.

(A)=4TNV98T-GECS (D)=
(B)= (E)=
(C)= (F)=

No.	Lev.	Parts No.	Description	Q'ty (A)	(B)	(C)	(D)	(E)	(F)	I	R
1	1	129908-21000	CRANKSHAFT ASSY	1							
3	2	129900-21200	GEAR, CRANKSHAFT	1							
4	2	121850-21290	PIN	1							
5	2	121850-21920	PIN, PARALLEL 10X22	1							
6	2	22512-070140	KEY, 7X 14	1							
7	1	129900-21640	WASHER	1							
7-1	1	129960-21940	WASHER, V-PULLEY	1						N	
	(A=E134366)										
8	1	129907-21660	V-PULLEY, CRANK 130	1							
9	1	129916-21610	BOLT	1							
10	1	121850-21130	BOLT, FLYWHEEL	6							
11	1	129920-21580	FLYWHEEL ASSY	1							
13	2	127410-21480	GEAR, RING Z=129	1							
14	1	129908-22080	PISTON ASSY	4							
16	2	129907-22050	RING SET, PISTON	4							
20	1	120130-22301	PIN, PISTON	4							
21	1	22252-000300	RING, 30	8							
22	1	129900-23001	ROD ASSY, CONNECTING	4							
25	2	129900-23200	BOLT, CONNECTING ROD	8							
26	2	129900-23601	BEARING, CRANK PIN	4							
28	1	129900-23911	BEARING, PISTON PIN	4							1
29	1	129900-23611	BEARING ASSY, 0.25US	4							2
31	1	729908-22900	PISTON ASSY, 0.25 OS	4							3
33	2	729907-22950	RING SET, 0.25 OS	4							3
37	1	129960-21930	GASKET, WASHER	1						W	
	(A=E134366)										

N:Old ←Yes/No→ New. Q:Old ←No/Yes→ New. R:Old ←Yes/Yes→ New. S:Old ←No/No→ New. W:Add. Z:Discontinued. F:Interchangeable by set. K:Q'ty Change

Copyright (C) YANMAR GLOBAL CS CO., LTD. All RightsReserved.

Fig.10. LUB.OIL SYSTEM

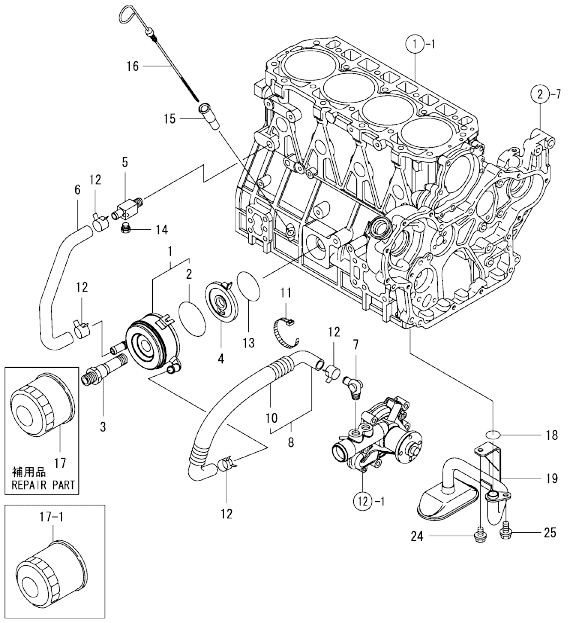

(A)=4TNV98T-GECS (D)=
(B)= (E)=
(C)= (F)=

No.	Lev.	Parts No.	Description	Q'ty (A)	(B)	(C)	(D)	(E)	(F)	I	R
1	1	129908-33010	COOLER ASSY, OIL	1							
2	2	123912-33050	O-RING	1							
3	1	123912-33100	BOLT, COOLER	1							
4	1	129908-33101	BRACKET, OIL COOLER	1							
5	1	129006-44480	JOINT	1							
6	1	129908-49060	HOSE, WATER	1							
7	1	129466-49300	ELBOW, PT3/8	1							
8	1	123910-49600	HOSE ASSY, WATER	1							
10	2	123910-49610	TUBE, CORRUGATED	1							
11	1	121750-59890	BAND, NYLON	1							
12	1	23000-025000	CLAMP, 25	4							
13	1	24321-000600	O-RING, 1AG60.0	1							
14	1	171056-49120	PLUG, DRAIN R1/4	1							
15	1	121520-34810	GUIDE, DIPSTICK	1							
16	1	129953-34830	DIPSTICK	1							
17	1	129150-35153	FILTER ASSY, D80X80L	1							1
17-1	1	119005-35151	FILTER, D80X100	1						N	1
	(A=EZZZZZ)										
18	1	129900-32030	O-RING, P20	1							
19	1	129953-35000	PIPE ASSY, OIL INLET	1							
24	1	26106-080122	BOLT, M8X 12 PLATED	1							
25	1	26106-080162	BOLT, M8X 16 PLATED	1							

Remarks
(1)REPAIR PART.

N:Old ←Yes/No→ New. Q:Old ←No/Yes→ New. R:Old ←Yes/Yes→ New. S:Old ←No/No→ New. W:Add. Z:Discontinued. F:Interchangeable by set. K:Q'ty Change

Copyright (C) YANMAR GLOBAL CS CO., LTD. All RightsReserved.

Fig.11. LUB.OIL LINE

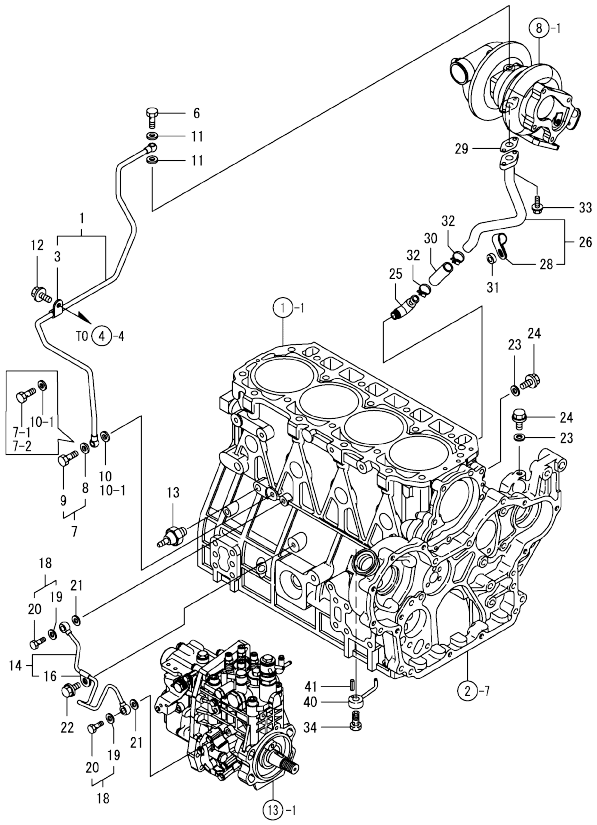

(A)=4TNV98T-GECS (D)=
(B)= (E)=
(C)= (F)=

No.	Lev.	Parts No.	Description	Q'ty (A)	(B)	(C)	(D)	(E)	(F)	I	R
1	1	129935-39040	PIPE ASSY, OIL	1							
3	2	124223-39900	RETAINER	1							
6	1	121252-39150	BOLT, JOINT M10X1.5	1							
7	1	129005-59830	BOLT ASSY, JOINT M8	1							
7-1	1	105010-39140	BOLT, PIPE JOINT M8	1						S	
	(A=ED5159)										
7-2	1	129198-59540	BOLT, PIPE JOINT M8	1						S	
	(A=E162773)										
8	2	22190-080002	WASHER, SEAL 6	1						Z	
	(A=ED5159)										
9	2	23857-030000	BOLT, JOINT 3	1						Z	
	(A=ED5159)										
10	1	22190-080002	WASHER, SEAL 6	1							
10-1	1	22190-080002	WASHER, SEAL 8	2						K	
	(A=ED5159)										
11	1	23414-100000	GASKET, 10X1.0	2							
12	1	26106-080122	BOLT, M8X 12 PLATED	1							
13	1	114250-39450	SWITCH, HYDRAULIC	1							
14	1	129907-39061	PIPE ASSY, OIL	1							
16	2	123907-39500	RETAINER, PIPE	1							
18	1	129005-59830	BOLT ASSY, JOINT M8	2							
19	2	22190-080002	WASHER, SEAL 6	2							
20	2	23857-030000	BOLT, JOINT 3	2							
21	1	22190-080002	WASHER, SEAL 6	2							
22	1	26106-080122	BOLT, M8X 12 PLATED	1							
23	1	22190-080002	WASHER, SEAL 6	2							
24	1	26106-080122	BOLT, M8X 12 PLATED	2							
25	1	124070-13300	ELBOW, PT3/8	1							
26	1	129935-39610	PIPE, OIL	1							
28	2	123910-39850	RETAINER	1							
29	1	129908-39690	GASKET	1							
30	1	123901-39820	HOSE, LO RETURN	1							
31	1	106500-44810	SPACER, PULLEY	1							
32	1	23000-025000	CLAMP, 25	2							
33	1	26106-060162	BOLT, M6X 16 PLATED	2							
34	1	129908-39410	VALVE ASSY, CHECK	4							
40	1	119000-39650	NOZZLE, COOLING	4							
41	1	22351-030010	PIN, SPRING 3.0X10	4							

N:Old ←Yes/No→ New. Q:Old ←No/Yes→ New. R:Old ←Yes/Yes→ New. S:Old ←No/No→ New. W:Add. Z:Discontinued. F:Interchangeable by set. K:Q'ty Change

Copyright (C) YANMAR GLOBAL CS CO., LTD. All RightsReserved.

Fig.12. COOLING WATER SYSTEM

(A)=4TNV98T-GECS
(B)=
(C)=
(D)=
(E)=
(F)=

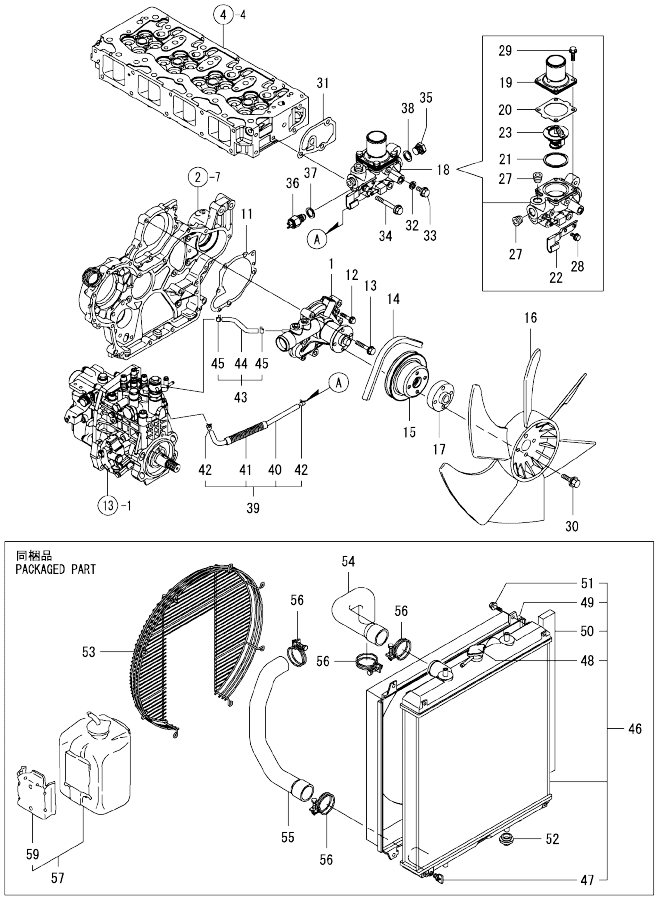

No.	Lev.	Parts No.	Description	Q'ty (A)	(B)	(C)	(D)	(E)	(F)	I	R
1	1	129907-42000	PUMP ASSY, WATER	1							
11	1	129900-42020	GASKET, WATER PUMP	1							
12	1	26106-060302	BOLT, M6X 30 PLATED	2							
13	1	26106-080552	BOLT, M8X 55 PLATED	5							
14	1	25132-004100	V-BELT, A41	1							
15	1	129900-42461	V-PULLEY, C.W.PUMP	1							
16	1	129916-44740	FAN, COOLING D=430	1							
17	1	119130-44760	SPACER, FAN	1							
18	1	129907-49800	CASE ASSY,THERMOSTAT	1							
19	2	129916-49530	COVER, THERMOSTAT	1							
20	2	121850-49540	GASKET, THERMOSTAT	1							
21	2	121850-49550	GASKET, THERMOSTAT	1							
22	2	129907-49730	RETAINER, PIPE	1							
23	2	121850-49810	THERMOSTAT, 71C	1							
27	2	23875-030000	PLUG, R03	2							
28	2	26106-060122	BOLT, M6X 12 PLATED	1							
29	2	26106-060202	BOLT, M6X 20 PLATED	4							
30	1	26106-080302	BOLT, M8X 30 PLATED	4							
31	1	129900-49870	GASKET, THERMOSTAT	1							
32	1	23414-080000	GASKET, 8X1.0	1							
33	1	26106-080122	BOLT, M8X 12 PLATED	1							
34	1	26106-080602	BOLT, M8X 60 PLATED	3							
35	1	121450-42450	PLUG, M16	1							
36	1	121250-44901	SWITCH, THERMO 110	1							
37	1	124465-44950	GASKET, 16	1							
38	1	124465-44950	GASKET, 16	1							
39	1	129907-49610	HOSE ASSY, WATER	1							
40	2	129907-49710	HOSE, WATER	1							
41	2	129907-49750	TUBE, CORRUGATED	1							
42	2	124722-59050	CLAMP, HOSE 9	2							
43	1	129907-49620	HOSE ASSY, WATER	1							
44	2	129907-49720	HOSE, WATER	1							
45	2	124722-59050	CLAMP, HOSE 9	2							
46	1	129940-44500	RADIATOR ASSY	1							
47	2	129508-44550	COCK ASSY	1							
48	2	129107-44590	CAP, RADIATOR	1							
49	2	129907-44600	SHROUD	1							
50	2	129907-44610	GASKET	2							
51	2	26014-060122	BOLT, M6X 12	4							
52	1	119255-44660	ABSORBER	4							
53	1	129907-44560	GUARD, FAN	1							
54	1	129981-49050	HOSE, WATER	1							
55	1	129981-49062	HOSE, WATER	1							
56	1	23000-060000	CLAMP, 60	4							
57	1	720445-44200	TANK ASSY, SUB	1							
59	2	120445-44540	SUPPORT	1							
60	1	23000-090000	CLAMP, 90	1							

N:Old ←Yes/No→ New. Q:Old ←No/Yes→ New. R:Old ←Yes/Yes→ New. S:Old ←No/No→ New. W:Add. Z:Discontinued. F:Interchangeable by set. K:Q'ty Change

Copyright (C) YANMAR GLOBAL CS CO., LTD. All RightsReserved.

Fig.13. FUEL INJECTION PUMP

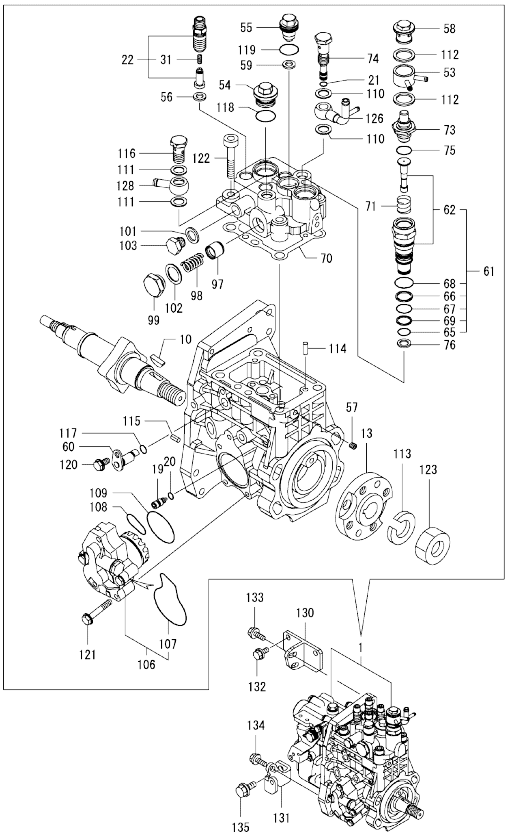

Remarks
(1)GOVERNOR ASSY(FIG.14) IS INCORPORATED IN THIS FOP.CMP (REF.NO.1).

(A)=4TNV98T-GECS (D)=
(B)= (E)=
(C)= (F)=

No.	Lev.	Parts No.	Description	Q'ty (A)	(B)	(C)	(D)	(E)	(F)	I	R
1	1	729937-51390	FIE ASSY	1							
10	2	144626-51090	FEATHER KEY, 5X19	1							
13	2	158563-51150	FLANGE	1							
19	2	158600-51270	STOPPER, TAPPET	1							
20	2	158563-51281	O-RING, 4D S6	1							
21	2	158563-51281	O-RING, 4D S6	1							
22	2	129509-51390	VALVE ASSY, DELIVERY	4							
31	3	158563-51330	SPRING, DELIVERY	4							
53	2	158553-51551	JOINT, COOLING WATER	1							
54	2	158601-51550	PLUG, M22	1							
55	2	129907-51560	PLUG, M16	1							
56	2	158552-51571	GASKET, PLUG	4							
57	2	158557-51570	PLUG, RACK	1							
58	2	158601-51570	PLUG	1							
59	2	129906-51580	GASKET, PLUG	1							
60	2	158552-51580	LIFTER, LINK	1							
61	2	119802-51590	TIMER ASSY	1							
62	3	119802-51600	TIMER ASSY	1							
65	3	158553-51670	O-RING	1							
66	3	119802-51680	RING, BACKUP	1							
67	3	119802-51690	O-RING	1							
68	3	24356-010200	O-RING, 4D1020	1							
69	3	24372-000150	RING, BACK UP T2P15	1							
70	2	158560-51600	GASKET	1							
71	2	158553-51630	SPRING, TIMER	1							
73	2	158553-51640	THERMOELEMENT	1							
74	2	158601-51650	JOINT, OVER FLOW	1							
75	2	158553-51660	O-RING, P14	1							
76	2	158553-51680	GASKET, TIMER	1							
97	2	158601-51770	PISTON, ACCUMLATOR	1							
98	2	158552-51781	SPRING, ACCUMULATOR	1							
99	2	158601-51790	PLUG	1							
101	2	22190-120002	WASHER, SEAL 12	1							
102	2	22190-180002	WASHER, SEAL 18	1							
103	2	158553-51930	PLUG, M12	1							
106	2	158552-52100	PUMP ASSY, FUEL FEED	1							
107	3	158552-52500	O-RING	1							
108	3	158552-52311	O-RING	1							
109	2	158552-52400	O-RING, 4E S42	1							
110	2	22190-120002	WASHER, SEAL 12	2							
111	2	22190-120002	WASHER, SEAL 12	2							
112	2	22190-180002	WASHER, SEAL 18	2							
113	2	22217-180000	WASHER, SPRING 18	1							
114	2	22312-050140	PIN, PARALLEL M5X14	2							
115	2	22351-050010	PIN, SPRING 5.0X10	2							
116	2	23857-060000	BOLT, JOINT 6	1							
117	2	24311-000070	O-RING, 1AP7.0	1							
118	2	24356-010200	O-RING, 4D1020	1							
119	2	24356-020210	O-RING, 4D2021	1							
120	2	26106-060102	BOLT, M6X 10 PLATED	1							
121	2	26106-060352	BOLT, M6X 35 PLATED	4							

N:Old ←Yes/No→ New. Q:Old ←No/Yes→ New. R:Old ←Yes/Yes→ New. S:Old ←No/No→ New. W:Add. Z:Discontinued. F:Interchangeable by set. K:Q'ty Change

++ CONTINUE ++

Copyright (C) YANMAR GLOBAL CS CO., LTD. All RightsReserved.

Fig.13. FUEL INJECTION PUMP

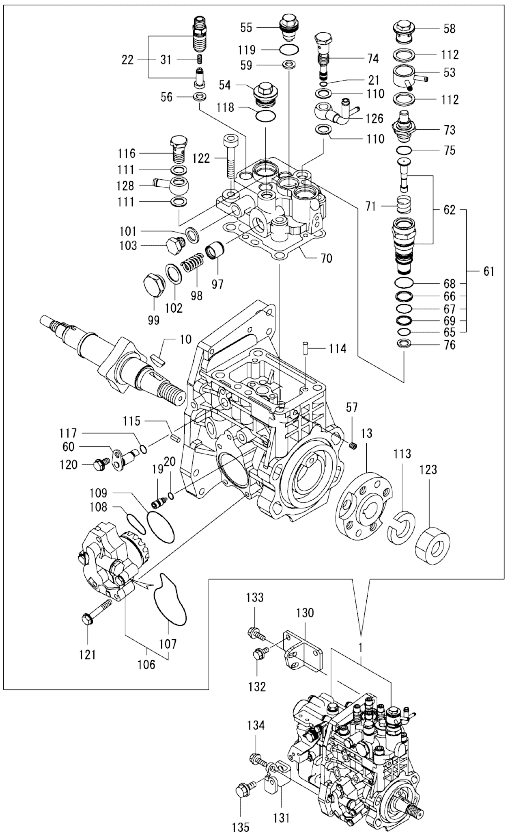

Remarks
(1)GOVERNOR ASSY(FIG.14) IS INCORPORATED IN THIS FOP.CMP (REF.NO.1).

(A)=4TNV98T-GECS (D)=
(B)= (E)=
(C)= (F)=

No.	Lev.	Parts No.	Description	Q'ty (A)	(B)	(C)	(D)	(E)	(F)	I	R
122	2	26450-100452	BOLT, M10X 45	4							
123	2	26776-180002	NUT, LOCK M18	1							
126	2	158552-51670	JOINT, OVER FLOW	1							
128	2	129916-59020	JOINT, PIPE 12	1							
130	1	129907-01950	RETAINER, PUMP	1							
131	1	129907-01960	RETAINER, PUMP	1							
132	1	26106-080162	BOLT, M8X 16 PLATED	2							
133	1	26106-080222	BOLT, M8X 22 PLATED	2							
134	1	26106-080222	BOLT, M8X 22 PLATED	1							
135	1	26106-100202	BOLT, M10X 20 PLATED	1							

N:Old ←Yes/No→ New. Q:Old ←No/Yes→ New. R:Old ←Yes/Yes→ New. S:Old ←No/No→ New. W:Add. Z:Discontinued. F:Interchangeable by set. K:Q'ty Change

Copyright (C) YANMAR GLOBAL CS CO., LTD. All RightsReserved.

Fig.14. GOVERNOR

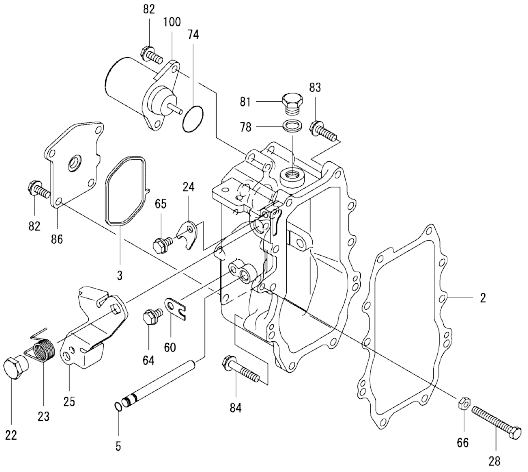

Remarks
* THIS FIGURE(GOVERNOR ASSY)IS INCORPORATED IN THE FUEL INJECTION PUMP ASSY(FIG.13).

(A)=4TNV98T-GECS (D)=
(B)= (E)=
(C)= (F)=

No.	Lev.	Parts No.	Description	Q'ty (A)	(B)	(C)	(D)	(E)	(F)	I	R
2	2	158560-61050	GASKET	1							
3	2	158560-61071	GASKET	1							
5	2	129155-51280	O-RING, S6	1							
22	2	129255-61410	NUT, M8	1							
23	2	119807-61420	SPRING, RETURN	1							
24	2	158560-61430	STOPPER, SHAFT	1							
25	2	129937-61440	LEVER, REGULATOR	1							
28	2	129155-61460	BOLT, LIMITING	1							
60	2	119660-61901	STOPPER, SHAFT	1							
64	2	26106-060102	BOLT, M6X 10 PLATED	1							
65	2	26106-060102	BOLT, M6X 10 PLATED	1							
66	2	26756-060002	NUT, LOCK M6	1							
74	2	158552-61900	O-RING	1							
78	2	22190-160002	WASHER, SEAL 16	1							
81	2	23887-160002	PLUG, 16	1							
82	2	26106-060142	BOLT, M6X 14 PLATED	6							
83	2	26106-060252	BOLT, M6X 25 PLATED	8							
84	2	26106-060402	BOLT, M6X 40 PLATED	2							
86	2	129946-61061	COVER, GOVERNOR CASE	1							
100	2	119653-77950	SOLENOID, STOP	1							

N:Old ←Yes/No→ New. Q:Old ←No/Yes→ New. R:Old ←Yes/Yes→ New. S:Old ←No/No→ New. W:Add. Z:Discontinued. F:Interchangeable by set. K:Q'ty Change

Copyright (C) YANMAR GLOBAL CS CO., LTD. All RightsReserved.

Fig.15. FUEL INJECTION VALVE

(A)=4TNV98T-GECS (D)=
(B)= (E)=
(C)= (F)=

No.	Lev.	Parts No.	Description	Q'ty (A)	(B)	(C)	(D)	(E)	(F)	I	R
1	1	729906-53100	FUEL INJECTOR ASSY	4							
2	2	129906-53000	NOZZLE ASSY, F.I.	4							
5	2	114250-53080	NUT, NOZZLE	4							
9	2	114250-53120	SPRING, NOZZLE	4							
10	2	114250-53130	SEAT, SPRING	4							
11	2	114250-53140	SPACER	4							
12	2	114250-53210	PIN	8							
13	2	119803-53400	SHIM SET	4							
40	1	123907-11601	SEAL, PIPE	4							
41	1	26106-060162	BOLT, M6X 16 PLATED	2							
42	1	26106-080182	BOLT, M8X 18 PLATED	1							
43	1	122780-59100	RETAINER	2							
44	1	119305-59120	RETAINER, PIPE	1							
47	2	129150-59131	BOLT, M4X14	1							
48	1	129550-59120	RETAINER, PIPE	1							
51	2	129150-59131	BOLT, M4X14	2							
52	1	129907-59710	SUPPORT	1							
54	1	129908-59810	PIPE ASSY, INJECTION	1							
55	1	129908-59820	PIPE ASSY, INJECTION	1							
56	1	129908-59830	PIPE ASSY, INJECTION	1							
57	1	129908-59840	PIPE ASSY, INJECTION	1							

N:Old ←Yes/No→ New. Q:Old ←No/Yes→ New. R:Old ←Yes/Yes→ New. S:Old ←No/No→ New. W:Add. Z:Discontinued. F:Interchangeable by set. K:Q'ty Change

Copyright (C) YANMAR GLOBAL CS CO., LTD. All RightsReserved.

Fig.16. FUEL LINE

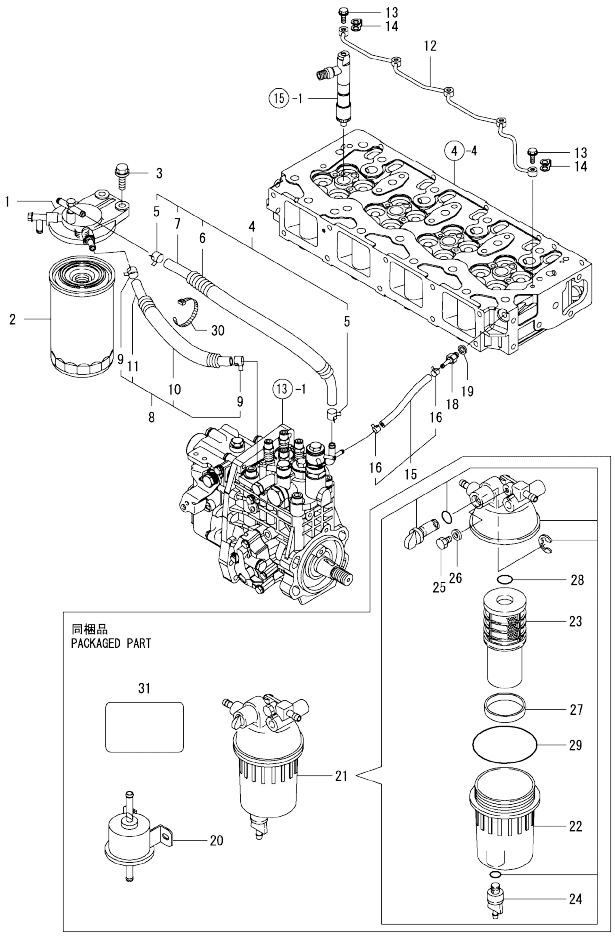

(A)=4TNV98T-GECS (D)=
(B)= (E)=
(C)= (F)=

No.	Lev.	Parts No.	Description	Q'ty (A)	(B)	(C)	(D)	(E)	(F)	I	R
1	1	129004-55612	BRACKET, FILTER	1							
2	1	123907-55801	FILTER, FUEL	1							
2-1	1	129907-55801	FILTER, FUEL	1							N
	(A=EZZZZZ)										
3	1	26106-080302	BOLT, M8X 30 PLATED	2							
4	1	129457-59010	HOSE ASSY, FUEL	1							
5	2	124766-59050	CLAMP, HOSE 11.5	2							
6	2	129957-59120	TUBE, CORRUGATED 15	1							
7	2	105025-59750	HOSE, FUEL	1							
8	1	129981-59010	HOSE ASSY, FUEL	1							
9	2	124766-59050	CLAMP, HOSE 11.5	2							
10	2	129950-59221	TUBE, CORRUGATED 15	1							
11	2	129980-59510	HOSE, FUEL	1							
12	1	129907-59140	PIPE ASSY, RETURN	1							
13	1	123907-59540	BOLT, PIPE JOINT M6	5							
14	1	123907-59550	GASKET	5							
15	1	129486-59551	HOSE ASSY, RETURN	1							
16	2	124722-59050	CLAMP, HOSE 9	2							
18	1	123907-59560	JOINT, HOSE	1							
19	1	22190-080002	WASHER, SEAL 6	1							
20	1	119225-52102	PUMP, FUEL FEED	1							
21	1	129242-55700	SEPARATOR ASSY,WATER	1							
22	2	129242-55720	CUP, SEPARATOR	1							
23	2	129242-55730	ELEMENT, FUEL	1							
24	2	129242-55740	PLUG, DRAIN	1							
25	2	129242-55750	VALVE, AIR VENT	1							
26	2	129242-55760	GASKET, PLUG	1							
27	2	129242-55770	FLOAT	1							
28	2	24311-000160	O-RING, 1AP16.0	1							
29	2	24321-000750	O-RING, 1AG75.0	1							
30	1	121750-59890	BAND, NYLON	1							
31	1	114110-07760	LABEL, FUEL CAUTION	1							

N:Old ←Yes/No→ New. Q:Old ←No/Yes→ New. R:Old ←Yes/Yes→ New. S:Old ←No/No→ New. W:Add. Z:Discontinued. F:Interchangeable by set. K:Q'ty Change

Copyright (C) YANMAR GLOBAL CS CO., LTD. All RightsReserved.

Fig.17. STARTING MOTOR

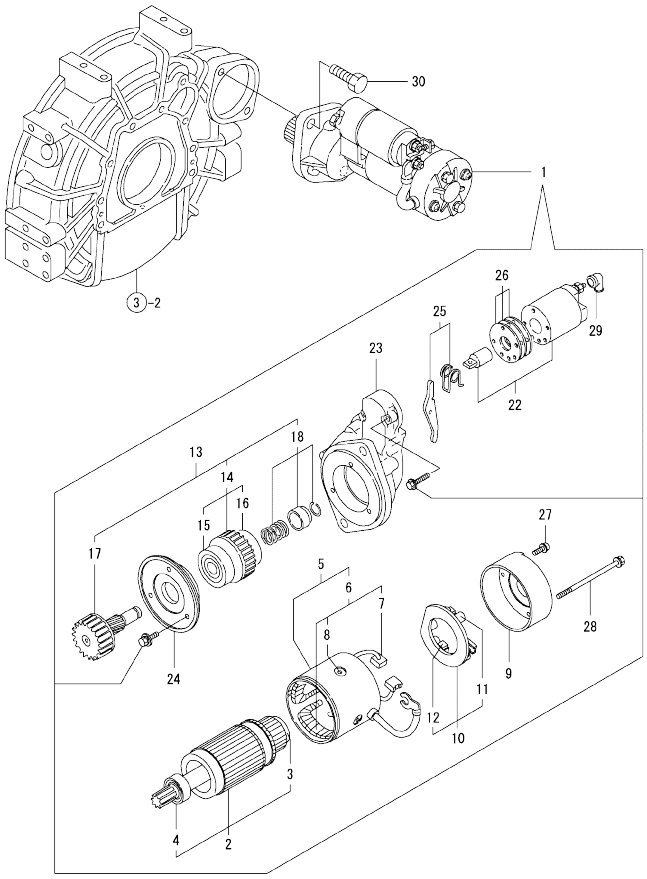

(A)=4TNV98T-GECS (D)=
(B)= (E)=
(C)= (F)=

No.	Lev.	Parts No.	Description	Q'ty (A)	(B)	(C)	(D)	(E)	(F)	I	R
1	1	129900-77040	STARTER ASSY	1							
2	2	129900-77120	ARMATURE ASSY	1							
3	3	171008-77410	BEARING, BALL	1							
4	3	171008-77420	BEARING, BALL	1							
5	2	129900-77130	YOKE ASSY	1							
6	3	129900-77140	COIL ASSY, FIELD	1							
7	4	129900-77450	BRUSH	2							
8	4	171008-77450	SCREW, CORE SET	4							
9	2	129900-77150	COVER	1							
10	2	129900-77160	HOLDER ASSY, BRUSH	1							
11	3	X2130631300	SPRING, BRUSH	4							
12	3	129900-77450	BRUSH	2							
13	2	129900-77170	CLUTCH ASSY	1							
14	3	129900-77180	CLUTCH ASSY	1							
15	4	129900-77190	BEARING, BALL	1							
16	4	X2114955020	BEARING, BALL	1							
17	3	129900-77270	SHAFT, PINION	1							
18	3	171008-77670	STOPPER SET, PINION	1							
22	2	129900-77280	SWITCH ASSY, MAGNET	1							
23	2	129900-77290	CASE, GEAR	1							
24	2	129900-77380	RETAINER, BEARING	1							
25	2	129900-77390	LEVER ASSY, SHIFT	1							
26	2	129900-77420	COVER KIT, DUST	1							
27	2	129900-77430	SCREW, M4X10	2							
28	2	129685-77640	BOLT, THROUGH	2							
29	2	171008-77750	COVER, TERMINAL	1							
30	1	26116-120302	BOLT, M12X 30 PLATED	2							

N:Old ←Yes/No→ New. Q:Old ←No/Yes→ New. R:Old ←Yes/Yes→ New. S:Old ←No/No→ New. W:Add. Z:Discontinued. F:Interchangeable by set. K:Q'ty Change

Copyright (C) YANMAR GLOBAL CS CO., LTD. All RightsReserved.

Fig.18. GENERATOR

(A)=4TNV98T-GECS
(B)=
(C)=
(D)=
(E)=
(F)=

No.	Lev.	Parts No.	Description	Q'ty (A)	(B)	(C)	(D)	(E)	(F)	I	R
1	1	129795-01900	BOLT, STUD M10X33	1							
2	1	129423-77200	GENERATOR ASSY, 40A	1							
3	2	X9490561001	NUT	1							
4	2	119620-77380	ROTOR ASSY	1							
5	3	123501-79240	BEARING, BALL	1							
6	3	119620-79250	COVER, BEARING	1							
7	2	119620-77421	FRAME ASSY,GENERATOR	1							
8	3	119620-79200	BEARING, BALL	1							
9	3	119620-79210	RETAINER	1							
10	3	119620-79220	SCREW	4							
11	3	119620-79230	BOLT, STUD	2							
12	2	119620-77440	FRAME ASSY	1							
13	2	129240-79300	COVER	1							
14	2	119620-77461	PULLEY, GENERATOR	1							
15	2	119620-77471	NUT	1							
16	2	119620-77490	COLLAR	1							
17	2	129423-77710	REGULATOR ASSY	1							
18	2	119620-79260	HOLDER	1							
19	2	129052-79270	HOLDER, BRUSH	1							
20	3	119620-77480	BRUSH	2							
21	3	119620-79280	SPRING	2							
22	2	119620-79290	SCREW	6							
23	2	119620-79300	SCREW	1							
24	2	119620-79310	BOLT	3							
25	2	119620-79320	SCREW	2							
26	2	119620-79330	BOLT	2							
27	2	119620-79340	BUSH, INSULATION	1							
28	2	119620-79350	NUT	2							
29	2	119620-79360	WASHER, THRUST	1							
30	1	26306-100002	NUT, M10	1							
31	1	129900-77330	ADJUSTER, BELT	1							
32	1	119810-77340	BOLT, ADJUST L=30	1							
33	1	26014-080252	BOLT, M8X 25	1							
34	1	129211-77920	TIMER, SECTION 1	1						W	1
	(A=EH8496)										

Remarks
(1)Loose parts.

N:Old $\frac{\text{Yes}}{\text{No}}$ New. Q:Old $\frac{\text{No}}{\text{Yes}}$ New. R:Old $\frac{\text{Yes}}{\text{Yes}}$ New. S:Old $\frac{\text{No}}{\text{No}}$ New. W:Add. Z:Discontinued. F:Interchangeable by set. K:Q'ty Change

Copyright (C) YANMAR GLOBAL CS CO., LTD. All RightsReserved.

Fig.19. GASKET SET & TOOLS

(A)=4TNV98T-GECS
(B)=
(C)=
(D)=
(E)=
(F)=

No.	Lev.	Parts No.	Description	Q'ty (A)	(B)	(C)	(D)	(E)	(F)	I	R
1	1	729908-92670	GASKET SET	1							1
2	2	129907-01331	GASKET, HEAD	1							
3	2	129900-32030	O-RING, P20	2							
4	2	129900-32040	O-RING, P14	1							
5	2	24311-000070	O-RING, 1AP7.0	1							
6	2	24351-030750	O-RING, 1A3075	1							
7	2	24311-000320	O-RING, 1AP32.0	2							
8	2	124240-01883	GASKET	1							
9	2	24341-000240	O-RING, 1AS24.0	1							
10	2	22190-220002	WASHER, SEAL 22	1							
11	2	119803-11340	SEAL, VALVE STEM	8							
12	2	124160-11340	SEAL, VALVE STEM	8							
13	2	119802-11870	PROTECTOR, NOZZLE	4							
14	2	119625-11880	SEAT, NOZZLE	4							
15	2	24311-000120	O-RING, 1AP12.0	8							
16	2	129933-11310	GASKET, BONNET	1							
17	2	129907-12110	GASKET, MANIFOLD	1							
18	2	119129-77020	GASKET	1							
19	2	121850-77021	GASKET, AIR HEATER	1							
20	2	129900-13251	GASKET, EXH.MANIFOLD	1							
21	2	123901-18080	GASKET	1							
22	2	129472-18090	GASKET	1							
23	2	24341-000530	O-RING, 1AS53.0	1							
24	2	24321-000600	O-RING, 1AG60.0	1							
25	2	22190-080002	WASHER, SEAL 6	9							
26	2	23414-100000	GASKET, 10X1.0	2							
27	2	129908-39690	GASKET	1							
28	2	129900-42020	GASKET, WATER PUMP	1							
29	2	121850-49540	GASKET, THERMOSTAT	1							
30	2	121850-49550	GASKET, THERMOSTAT	1							
31	2	129900-49870	GASKET, THERMOSTAT	1							
32	2	23414-080000	GASKET, 8X1.0	1							
33	2	124465-44950	GASKET, 16	2							
34	2	123907-59550	GASKET	5							
35	1	129400-92450	HONE, FLEX	1							1
36	1	977770-1207F	GASKET.LIQUID	1							1

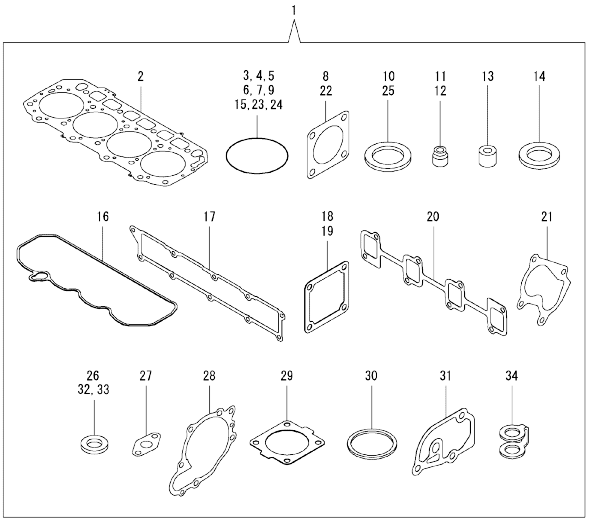

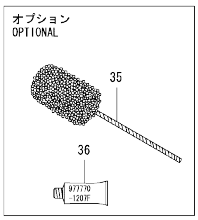

Remarks
(1)OPTIONAL PART.

N:Old ←Yes/No→ New. Q:Old ←No/Yes→ New. R:Old ←Yes/Yes→ New. S:Old ←No/No→ New. W:Add. Z:Discontinued. F:Interchangeable by set. K:Q'ty Change

Copyright (C) YANMAR GLOBAL CS CO., LTD. All RightsReserved.

Parts No. Index

Parts No.	Fig. No.	Ref. No.
105010-39140	11	7 -1
105025-59750	16	7
106500-44810	11	31
114110-07760	16	31
114250-39450	11	13
114250-53080	15	5
114250-53120	15	9
114250-53130	15	10
114250-53140	15	11
114250-53210	15	12
119000-01840	3	3
119000-39650	11	40
119005-35151	10	17 -1
119005-77051	5	7
119006-03090	4	64
119100-11330	4	59
119129-77020	5	5
	19	18
119129-77520	5	24
119130-44760	12	17
119131-18320	8	3
119160-12530	5	14
119160-12540	5	15
119225-52102	16	20
119255-44660	12	52
119305-59120	15	44
119593-11301	4	32
119620-11180	4	16
119620-77380	18	4
119620-77421	18	7
119620-77440	18	12
119620-77461	18	14
119620-77471	18	15
119620-77480	18	20
119620-77490	18	16
119620-79200	18	8
119620-79210	18	9
119620-79220	18	10
119620-79230	18	11
119620-79250	18	6
119620-79260	18	18
119620-79280	18	21
119620-79290	18	22
119620-79300	18	23
119620-79310	18	24
119620-79320	18	25
119620-79330	18	26
119620-79340	18	27
119620-79350	18	28
119620-79360	18	29

Parts No.	Fig. No.	Ref. No.
119625-11880	4	28
	19	14
119640-01640	3	7
119653-77950	14	100
119660-61901	14	60
119802-11870	4	27
	19	13
119802-51590	13	61
119802-51600	13	62
119802-51680	13	66
119802-51690	13	67
119803-11340	4	17
	19	11
119803-53400	15	13
119807-61420	14	23
119810-77340	18	32
120130-22301	9	20
120445-44540	12	59
121250-44901	12	36
121252-39150	11	6
121450-42450	12	35
121520-34810	10	15
121750-59890	10	11
	16	30
121850-21130	9	10
121850-21290	9	4
121850-21920	9	5
121850-49540	12	20
	19	29
121850-49550	12	21
	19	30
121850-49810	12	23
121850-77021	5	6
	19	19
122780-59100	15	43
123501-79240	18	5
123900-13630	6	3
123900-25060	7	9
123901-03240	4	70
123901-03280	4	75
123901-18080	6	5
	19	21
123901-39820	11	30
123907-11280	4	37
123907-11550	4	3
123907-11601	15	40
123907-11820	4	23
123907-11830	4	22
123907-39500	11	16
123907-55801	16	2

Parts No.	Fig. No.	Ref. No.
123907-59540	16	13
123907-59550	16	14
	19	34
123907-59560	16	18
123910-39850	11	28
123910-49600	10	8
123910-49610	10	10
123912-33050	10	2
123912-33100	10	3
123951-18220	5	18
124070-13300	11	25
124160-01751	2	23
	4	52
124160-11340	4	18
	19	12
124160-11360	4	61
124223-39900	11	3
124240-01871	2	24
124240-01883	2	25
	19	8
124411-01780	3	5
124465-44950	12	37
		38
	19	33
124722-59050	12	42
		45
	16	16
124766-59050	16	5
		9
126650-12680	5	16
127410-21480	9	13
129004-55612	16	1
129005-59830	11	7
		18
129006-44480	10	5
129052-79270	18	19
129100-01580	2	4
	3	1
129107-44590	12	48
129150-02450	7	4
129150-03100	4	66
129150-11230	4	40
		44
129150-11750	4	21
		41
		45
129150-14200	7	1
129150-25920	7	13
129150-35153	10	17
129150-59131	15	47

Parts No.	Fig. No.	Ref. No.
129150-59131	15	51
129150-91400	2	28
129155-51280	14	5
129155-61460	14	28
129198-59540	11	7 -2
129211-77920	18	34
129240-79300	18	13
129242-55700	16	21
129242-55720	16	22
129242-55730	16	23
129242-55740	16	24
129242-55750	16	25
129242-55760	16	26
129242-55770	16	27
129255-61410	14	22
129400-92450	19	35
129410-03990	4	76
129418-18320	6	4
129423-77200	18	2
129423-77710	18	17
129457-59010	16	4
129466-49300	10	7
129472-18090	8	2
	19	22
129486-59551	16	15
129508-44550	12	47
129509-51390	13	22
129550-59120	15	48
129685-77640	17	28
129795-01900	18	1
129900-01200	1	27
129900-01250	1	4
129900-01740	2	5
129900-02020	1	6
129900-02341	1	33
129900-02410	1	9
129900-02931	1	24
129900-02941	1	36
129900-13251	6	2
	19	20
129900-14100	7	6
129900-21200	9	3
129900-21640	9	7
129900-23001	9	22
129900-23200	9	25
129900-23601	9	26
129900-23611	9	29
129900-23911	9	28
129900-25100	7	10
129900-32030	2	10

Parts No. Index

Parts No.	Fig. No.	Ref. No.
129900-32030	10	18
	19	3
129900-32040	2	11
	19	4
129900-42020	12	11
	19	28
129900-42461	12	15
129900-49870	12	31
	19	31
129900-77040	17	1
129900-77120	17	2
129900-77130	17	5
129900-77140	17	6
129900-77150	17	9
129900-77160	17	10
129900-77170	17	13
129900-77180	17	14
129900-77190	17	15
129900-77270	17	17
129900-77280	17	22
129900-77290	17	23
129900-77330	18	31
129900-77380	17	24
129900-77390	17	25
129900-77420	17	26
129900-77430	17	27
129900-77450	17	7
		12
129906-51580	13	59
129906-53000	15	2
129907-01190	1	29
129907-01331	1	28
	19	2
129907-01950	13	130
129907-01960	13	131
129907-03011	4	54
129907-03061	4	55
129907-03070	4	56
129907-07900	4	1
129907-11100	4	13
129907-11110	4	14
129907-11120	4	15
129907-11250	4	34
129907-11260	4	35
129907-11270	4	36
129907-11341	4	33
129907-11510	4	19
129907-11650	4	38
129907-11660	4	42
129907-11800	4	26

Parts No.	Fig. No.	Ref. No.
129907-11910	4	29
129907-11920	4	46
129907-11950	4	30
129907-12110	5	2
	19	17
129907-14400	7	2
129907-21660	9	8
129907-22050	9	16
129907-25900	7	16
129907-39061	11	14
129907-42000	12	1
129907-44560	12	53
129907-44600	12	49
129907-44610	12	50
129907-49610	12	39
129907-49620	12	43
129907-49710	12	40
129907-49720	12	44
129907-49730	12	22
129907-49750	12	41
129907-49800	12	18
129907-51560	13	55
129907-55801	16	2 -1
129907-59140	16	12
129907-59710	15	52
129908-01500	2	7
129908-03099	4	65
129908-03230	4	67
129908-03240	4	68
129908-03250	4	69
129908-11700	4	4
129908-14581	7	3
129908-21000	9	1
129908-22080	9	14
129908-32060	2	9
129908-33010	10	1
129908-33101	10	4
129908-39410	11	34
129908-39690	11	29
	19	27
129908-49060	10	6
129908-59810	15	54
129908-59820	15	55
129908-59830	15	56
129908-59840	15	57
129915-01610	3	2
129916-01790	3	5 -1
129916-01800	2	3
129916-21610	9	9
129916-44740	12	16

Parts No.	Fig. No.	Ref. No.
129916-49530	12	19
129916-59020	13	128
129920-21580	9	11
129927-42140	2	11 A
129933-11310	4	58
	19	16
129933-11320	4	53
129935-03260	4	72
129935-03270	4	73
129935-12520	5	13
129935-13100	6	1
129935-18010	8	1
129935-18350	5	8
129935-39040	11	1
129935-39610	11	26
129937-12550	5	11
129937-61440	14	25
129940-44500	12	46
129944-12110	5	1
129946-12500	5	12
129946-12520	5	12 -1
129946-12600	5	20
129946-61061	14	86
129950-59221	16	10
129953-25300	7	15
129953-34830	10	16
129953-35000	10	19
129957-59120	16	6
129960-03990	4	77
129960-21930	9	37
129960-21940	9	7 -1
129980-59510	16	11
129981-49050	12	54
129981-49062	12	55
129981-59010	16	8
129982-01710	3	6
144626-51090	13	10
158552-51571	13	56
158552-51580	13	60
158552-51670	13	126
158552-51781	13	98
158552-52100	13	106
158552-52311	13	108
158552-52400	13	109
158552-52500	13	107
158552-61900	14	74
158553-51551	13	53
158553-51630	13	71
158553-51640	13	73
158553-51660	13	75

Parts No.	Fig. No.	Ref. No.
158553-51670	13	65
158553-51680	13	76
158553-51930	13	103
158557-51570	13	57
158560-51600	13	70
158560-61050	14	2
158560-61071	14	3
158560-61430	14	24
158563-51150	13	13
158563-51281	13	20
		21
158563-51330	13	31
158600-51270	13	19
158601-51550	13	54
158601-51570	13	58
158601-51650	13	74
158601-51770	13	97
158601-51790	13	99
171008-77410	17	3
171008-77420	17	4
171008-77450	17	8
171008-77670	17	18
171008-77750	17	29
171051-01921	1	5
171056-49120	10	14
22190-080002	11	8
		10
		10 -1
		19
		21
		23
	16	19
	19	25
22190-120002	13	101
		110
		111
22190-160002	14	78
22190-180002	13	102
		112
22190-220002	3	9
	19	10
22217-180000	13	113
22252-000300	9	21
22312-050140	13	114
22351-030010	11	41
22351-050010	13	115
22351-060012	1	10
22512-070140	7	7
	9	6
22857-500100	4	60

Parts No. Index

Parts No.	Fig. No.	Ref. No.
23000-022000	4	78
23000-025000	10	12
	11	32
23000-054000	5	19
23000-060000	5	17
	12	56
23000-080000	5	21
23000-090000	12	60
23414-080000	12	32
	19	32
23414-100000	11	11
	19	26
23857-030000	11	9
		20
23857-060000	13	116
23875-030000	12	27
23876-020000	4	10
23876-030000	1	11
		12
		13
	4	11
23887-160002	14	81
24311-000070	2	14
	13	117
	19	5
24311-000120	4	31
		62
	19	15
24311-000160	16	28
24311-000320	2	27
	4	63
	19	7
24321-000600	10	13
	19	24
24321-000750	16	29
24341-000240	2	29
	19	9
24341-000530	19	23
24351-030750	2	15
	19	6
24356-010200	13	68
		118
24356-020210	13	119
24372-000150	13	69
25132-004100	12	14
26014-060122	12	51
26014-080252	18	33
26106-060102	13	120
	14	64
		65

Parts No.	Fig. No.	Ref. No.
26106-060122	12	28
26106-060142	14	82
26106-060162	2	30
	11	33
	15	41
26106-060202	12	29
26106-060252	14	83
26106-060302	12	12
26106-060352	13	121
26106-060402	14	84
26106-080122	3	10
	4	79
	10	24
	11	12
		22
		24
	12	33
26106-080142	4	80
26106-080162	2	16
		17
		26
	4	2
	5	22
	7	8
	10	25
	13	132
26106-080182	15	42
26106-080202	2	18
26106-080222	13	133
		134
26106-080302	12	30
	16	3
26106-080402	2	19
		20
	4	48
26106-080452	2	21
	5	3
26106-080552	7	14
	12	13
26106-080602	4	49
		50
	12	34
26106-080702	2	12
		13
	5	9
26106-080802	5	4
26106-080902	5	10
26106-100162	5	23
26106-100202	13	135
26116-050102	4	71

Parts No.	Fig. No.	Ref. No.
26116-120302	17	30
26206-100352	3	4
26216-100302	2	8
26226-080222	4	47
26306-080002	4	51
	8	4
26306-100002	2	22
	18	30
26450-100452	13	122
26756-060002	14	66
26776-180002	13	123
27241-300000	1	14
27241-400000	4	12
27310-070001	4	24
720445-44200	12	57
729900-02801	1	30
729906-53100	15	1
729907-01530	2	1
729907-22950	9	33
729908-01560	1	1
729908-22900	9	31
729908-92670	19	1
729937-51390	13	1
977770-1207F	19	36
X2114955020	17	16
X2130631300	17	11
X9490561001	18	3

Parts No.	Fig. No.	Ref. No.