YANMAR

PARTS CATALOG

0CW10-M45300EN

Last update Mar., 2013

PREFACE

1. This parts catalog carries all parts incorporated in YANMAR Model 4TNV98T-GGE2 engine manufactured since September, 2008.

2. Each illustration corresponds to the parts list on the following page.

3. When ordering parts, clearly write down the engine model and serial number, as well as the name and number of each part in your order sheet. This will help insure reliable delivery of the parts you have ordered.

Directions for the Parts Catalog.

1.The parts stipulated in this Parts Catalog are not necessarily standard equipped parts.
2.Parts may change without prior notice.
3.The following is an example of the Parts Catalog format.

0CF10-G21601 29. FUEL INJECTION PUMP(W/BOOST)

(A)=4JH-DT
(B)=4JH-DTZ
(C)=4JH-DTZP
(D)=4JH-DTZA
(E)=4JH-DTZY
(F)=

① REF.	② LEV.	PARTS NO.	DESCRIPTION	Q'TY (A)	(B)	(C)	(D)	(E)	(F)	③ I	⑤ R
1	1	729595-51390	FUEL INJECTION PUMP	1	1	1	1	1			1
1-1	1	729595-51391	FUEL INJECTION PUMP	1	1	1	1	1		N	1
	(A=E00185)	(B=E00200)									
3	2	26022-060162	SCREW M 6X 16	9	9	9	9	9			
3-1 ④	2	26022-060162	SCREW M 6X 16	4	4	4	4	4		K	
	(A=E00156)	(B=E00156)	(C=E00156) (D=E00156)	(E=E00156)							
4	2	129470-51040	CAMSHAFT	1	1	1	1	1			
5	2	122710-51050	BEARING, ROLLER	2	2	2	2	2			
6	2	129470-51060	RETAINER	1	1	1	1	1			

Remarks
(1) BOOST COMPEMSATOR TYPE. OPTIONAL
PART, TO E00155,(4JH-DT, 4JH-DTZ

① Ref. No.

The Ref. No. listed may not be in accordance with the illustration Ref. No.

(Ex.) Illustration No. 1 List Ref No. 1 (Before change) → 1- 1 (After change)

For interchangeable symbols N, R and K, illustrations for new parts may be abbreviated.

② Lev. (Level)

Level indication
The numbers below indicate the level of relativity towards the main part.
1 ----- Main parts (Assembly parts)
2 ----- Sub component included in " 1 ".
3 ----- Sub component included in " 2 ".
Note) Parts that are not for sale are partially illustrated but not listed.

③ Interchangeability Mark

When a part change takes place, one of the following interchangeability symbols is indicated beside the part.

Symbol	Interchangeability	Contents note
N	Old ← Yes / No → New	New Part is interchangeable for Old Part but Old Part is not interchangeable for New Part.
Q	Old ← No / Yes → New	New Part is not interchangeable for Old Part but Old Part is interchangeable for New Part.
R	Old ← Yes / Yes → New	New/ Old Parts are both interchangeable.
S	Old ← No / No → New	New/ Old Parts are both not interchangeable.
W		Part newly added.
Z		Part discontinued.
F		Not interchangeable by a single part but interchangeable together with related parts.
K		Changes only for used parts quantities.

④ Effective Machine No.

When a part changes, the effective Machine No. will be indicated in the (A)-(F) column.

Product Symbol	Product No.	Product Symbol	Product No.
C	Clutch No. Compressor No.	F	Machine No. (Agricultural Equip.)
D	Drive No.	M	Machine No.
E	Engine No.		

Note 1) A date may follow the symbol. (Ex.) 1996.01
Note 2) " XXXXX " and " ZZZZZ " are for parts that could not be predicted or for engine models that could not be identified.
Note 3) (A=E00185) is the E (Engine Serial Number) for the column (A) model (in this case 4JH-DT) after the parts design change.

⑤ Remarks Mark

Figures or alphabets (symbols) are entered in the remarks column.
The comments (remarks) on parts that are indicated at the bottom of the illustration are the same symbols as those stated above.

Contents

0CW10-M45300

Fig. No.	Fig. Name
4TNV98T-GGE2	
1.	CYLINDER BLOCK
2.	GEAR HOUSING
3.	FLYWHEEL HOUSING & OIL SUMP
4.	CYLINDER HEAD & BONNET
5.	SUCTION MANIFOLD & AIR CLEANER
6.	EXHAUST MANIFOLD
7.	CAMSHAFT & DRIVING GEAR
8.	TURBINE
9.	CRANKSHAFT & PISTON
10.	LUB.OIL SYSTEM
11.	LUB.OIL LINE
12.	COOLING WATER SYSTEM
13.	FUEL INJECTION PUMP
14.	GOVERNOR
15.	FUEL INJECTION VALVE
16.	FUEL LINE
17.	STARTING MOTOR
21.	(17A)STARTING MOTOR
18.	GENERATOR
19.	ELECTRIC PARTS
22.	(19A)ACCESSORY
20.	GASKET SET & TOOLS

Fig.1. CYLINDER BLOCK

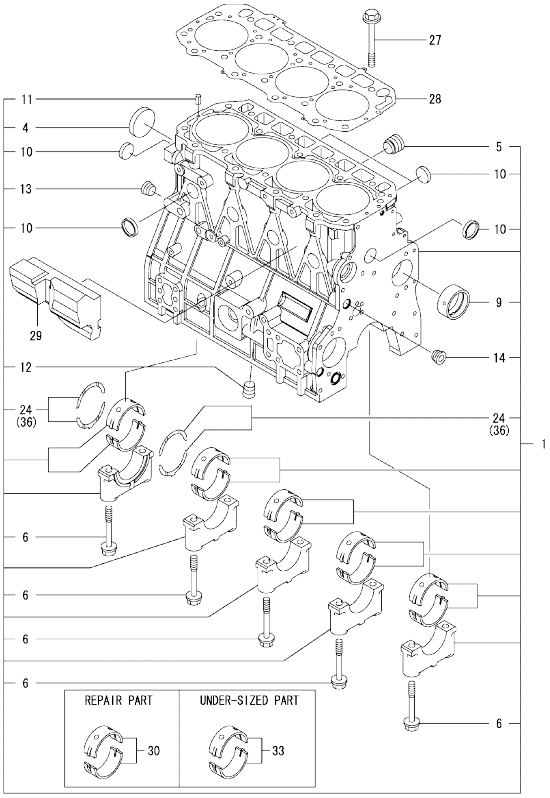

Remarks
(1)REPAIR PART.
(2)UNDER-SIZED(U.S=0.25)PART.
(3)OVER-SIZED(O.S=0.25)PART.

(A)=4TNV98T-GGE2 (D)=
(B)= (E)=
(C)= (F)=

No.	Lev.	Parts No.	Description	Q'ty (A)	(B)	(C)	(D)	(E)	(F)	I	R
1	1	729908-01560	BLOCK ASSY, CYLINDER	1							
4	3	129900-01250	PLUG, 55	1							
5	3	171051-01921	PLUG, NPTF1	1							
6	3	129900-02020	BOLT, METAL CAP	10							
9	3	129900-02410	BUSH, CAMSHAFT	1							
10	3	27241-300000	PLUG 30	8							
11	2	22351-060012	PIN, SPRING 6.0X12	2							
12	2	23876-030000	PLUG, R03	1							
13	2	23876-030000	PLUG, R03	1							
14	2	23876-030000	PLUG, R03	1							
24	2	129900-02931	METAL ASSY, THRUST	2							
27	1	129900-01200	BOLT, CYLINDER HEAD	18							
28	1	129907-01331	GASKET, HEAD	1							
29	1	129907-01190	SPACER	1							
30	1	729900-02801	METAL ASSY, MAIN	5							1
33	1	129900-02341	METAL ASSY, MAIN .25	5							2
36	1	129900-02941	METAL ASSY, 0.25 OS	2							3

N:Old $\frac{\text{Yes}}{\text{No}}$ New. Q:Old $\frac{\text{No}}{\text{Yes}}$ New, R:Old $\frac{\text{Yes}}{\text{Yes}}$ New, S:Old $\frac{\text{No}}{\text{No}}$ New, W:Add, Z:Discontinued, F:Interchangeable by set, K:Q'ty Change

Copyright (C) YANMAR GLOBAL CS CO., LTD. All RightsReserved.

Fig.2. GEAR HOUSING

(A)=4TNV98T-GGE2
(B)=
(C)=
(D)=
(E)=
(F)=

No.	Lev.	Parts No.	Description	Q'ty (A)	(B)	(C)	(D)	(E)	(F)	I	R
1	1	729907-01530	COVER ASSY, CASE	1							
3	2	129916-01800	SEAL, OIL	1							
4	1	129100-01580	PIN, PARALLEL 8X16	4							
5	1	129900-01740	COVER, PUMP TIMING	1							
7	1	129908-01500	CASE, GEAR	1							
8	1	129908-32060	PUMP ASSY, OIL	1							
9	1	26216-100302	STUD, M10X 30	4							
10	1	129900-32030	O-RING, P20	1							
11	1	129900-32040	O-RING, P14	1							
11A	1	129927-42140	GASKET, PUMP OUTLET	1						W	
	(A=*2014.09)										
12	1	129001-91810	BOLT, M8X70	6							
13	1	129001-91810	BOLT, M8X70	1							
14	1	24311-000070	O-RING, 1AP7.0	1							
15	1	24351-030750	O-RING, 1A3075	1							
16	1	26106-080162	BOLT, M8X 16 PLATED	1							
17	1	26106-080162	BOLT, M8X 16 PLATED	1							
18	1	26106-080202	BOLT, M8X 20 PLATED	3							
19	1	26106-080402	BOLT, M8X 40 PLATED	5							
20	1	26106-080402	BOLT, M8X 40 PLATED	5							
21	1	26106-080452	BOLT, M8X 45 PLATED	3							
22	1	26306-100002	NUT, M10	4							
23	1	124160-01751	CAP, FILLER	1							
24	1	24311-000320	O-RING, 1AP32.0	1							
25	1	124240-01871	COVER,HYDRAULIC PUMP	1							
26	1	124240-01883	GASKET, PUMP	1							
27	1	26106-080162	BOLT, M8X 16 PLATED	4							
28	1	129150-91400	GEAR, TACHOMETER	1							
29	2	24341-000240	O-RING, 1AS24.0	1							
30	1	26106-060162	BOLT, M6X 16 PLATED	2							

N:Old ←Yes/No→ New. Q:Old ←No/Yes→ New. R:Old ←Yes/Yes→ New. S:Old ←No/No→ New. W:Add. Z:Discontinued. F:Interchangeable by set. K:Q'ty Change

Copyright (C) YANMAR GLOBAL CS CO., LTD. All RightsReserved.

Fig.3. FLYWHEEL HOUSING & OIL SUMP

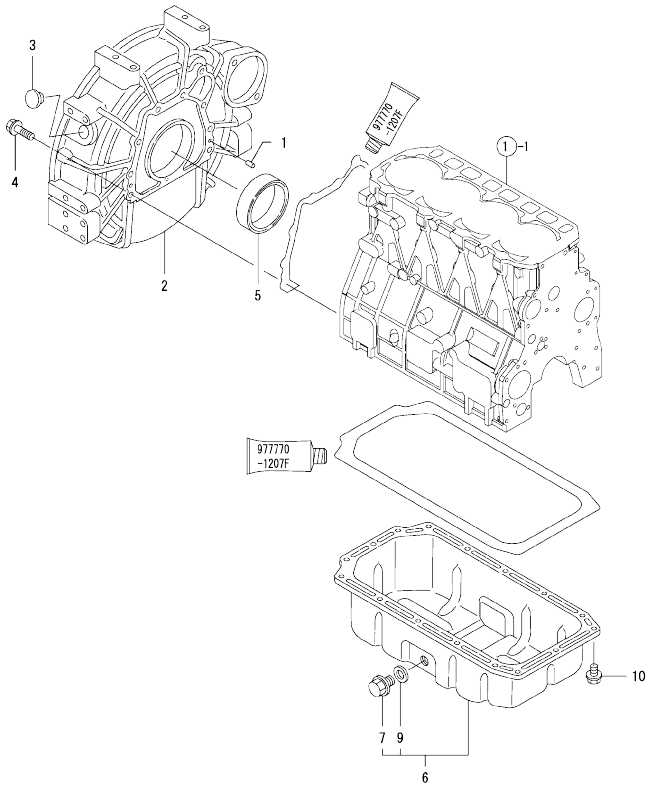

(A)=4TNV98T-GGE2
(B)=
(C)=
(D)=
(E)=
(F)=

No.	Lev.	Parts No.	Description	Q'ty (A)	(B)	(C)	(D)	(E)	(F)	I	R
1	1	129100-01580	PIN, PARALLEL 8X16	2							
2	1	129915-01610	HOUSING, FLYWHEEL	1							
3	1	119000-01840	PLUG, RUBBER 25	1							
4	1	26206-100352	BOLT, M10X 35 PLATED	9							
5	1	124411-01780	SEAL, HTC95X115X12	1							
6	1	129982-01710	OIL PAN ASSY	1							
7	2	119640-01640	PLUG, DRAIN M22	1							
9	2	22190-220002	WASHER, SEAL 22	1							
10	1	26106-080122	BOLT, M8X 12 PLATED	16							

N:Old ←Yes/No→ New. Q:Old ←No/Yes→ New. R:Old ←Yes/Yes→ New. S:Old ←No/No→ New. W:Add. Z:Discontinued. F:Interchangeable by set. K:Q'ty Change

Copyright (C) YANMAR GLOBAL CS CO., LTD. All RightsReserved.

Fig.4. CYLINDER HEAD & BONNET

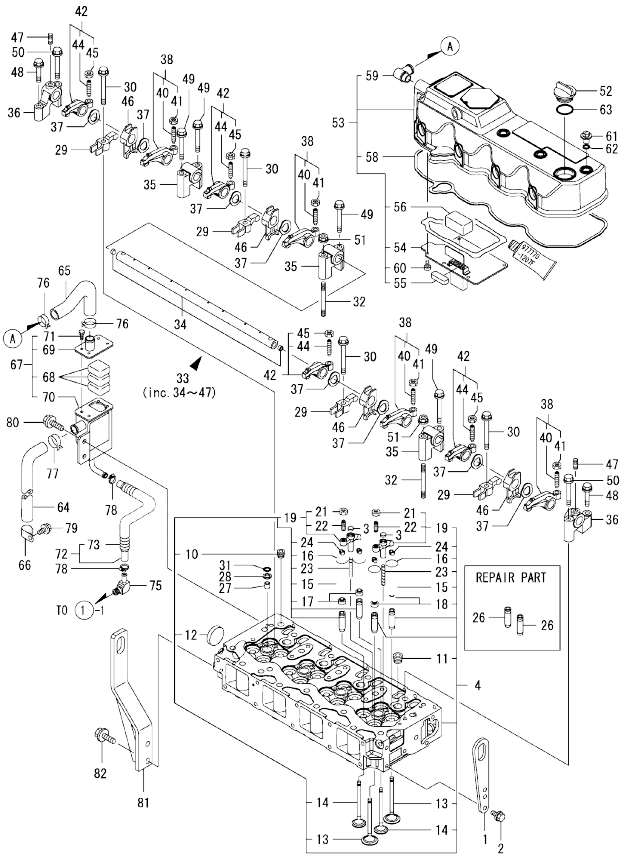

(A)=4TNV98T-GGE2
(B)=
(C)=
(D)=
(E)=
(F)=

No.	Lev.	Parts No.	Description	Q'ty (A)	(B)	(C)	(D)	(E)	(F)	I	R
1	1	129900-07900	LIFTER, ENGINE	1							
2	1	26106-080162	BOLT, M8X 16 PLATED	2							
3	1	123907-11550	SEAT, VALVE BRIDGE	8							
4	1	129908-11700	HEAD ASSY, CYLINDER	1							
10	2	23876-020000	PLUG, R02	1							
11	2	23876-030000	PLUG, R03	4							
12	2	27241-400000	PLUG, 40	1							
13	2	129907-11100	VALVE, INTAKE	8							
14	2	129907-11110	VALVE, EXHAUST	8							
15	2	129907-11120	SPRING, VALVE	16							
16	2	119620-11180	RETAINER, SPRING	16							
17	2	119803-11340	SEAL, VALVE STEM	8							
18	2	124160-11340	SEAL, VALVE STEM	8							
19	2	129907-11510	BRIDGE ASSY, VALVE	8							
21	3	129150-11750	NUT, M8XP1.0	8							
22	3	123907-11830	ADJUSTER, BRIDGE	8							
23	2	123907-11820	GUIDE, BRIDGE	8							
24	2	27310-070001	COTTER, 7	16							
26	1	129907-11800	GUIDE, VALVE	16							1
27	1	119802-11870	PROTECTOR, NOZZLE	4							
28	1	119625-11880	SEAT, NOZZLE	4							
29	1	129907-11910	RETAINER, NOZZLE	4							
30	1	129907-11950	BOLT, VALVE HOLDER	4							
31	1	24311-000120	O-RING, 1AP12.0	4							
32	1	119593-11301	STUD, M8X80	2							
33	1	129907-11341	SUPPORT ASSY, ROCKER	1							
34	2	129907-11250	SHAFT, ROCKER ARM	1							
35	2	129907-11260	SUPPORT, ROCKER A	3							
36	2	129907-11270	SUPPORT, ROCKER B	2							
37	2	123907-11280	WASHER, WAVE	8							
38	2	129907-11650	ARM ASSY, ROCKER INT	4							
40	3	129150-11230	SCREW, VALVE ADJUST	4							
41	3	129150-11750	NUT, M8XP1.0	4							
42	2	129907-11660	ARM ASSY, ROCKER EXH	4							
44	3	129150-11230	SCREW, VALVE ADJUST	4							
45	3	129150-11750	NUT, M8XP1.0	4							
46	2	129907-11920	RETAINER, NOZZLE	4							
47	2	26226-080222	STUD, M8X 22	2							
48	1	26106-080402	BOLT, M8X 40 PLATED	2							
49	1	26106-080602	BOLT, M8X 60 PLATED	4							
50	1	26106-080602	BOLT, M8X 60 PLATED	2							
51	1	26306-080002	NUT, M8	2							
52	1	124160-01751	CAP, FILLER	1							
53	1	129933-11320	BONNET ASSY, HEAD	1							
54	2	129907-03011	PLATE, BAFFLE	1							
55	2	129907-03061	BAFFLE, BREATHER	1							
56	2	129907-03070	BAFFLE, BREATHER	1							
58	2	129933-11310	GASKET, BONNET	1							
59	2	119100-11330	ELBOW, BREATHER	1							
60	2	22857-500100	SCREW, 5X10	6							
61	1	124160-11360	KNOB, BONNET	4							

Remarks
(1)REPAIR PART.

N:Old ←Yes/No→ New. Q:Old ←No/Yes→ New. R:Old ←Yes/Yes→ New. S:Old ←No/No→ New. W:Add. Z:Discontinued. F:Interchangeable by set. K:Q'ty Change

++ CONTINUE ++

Copyright (C) YANMAR GLOBAL CS CO., LTD. All RightsReserved.

Fig.4. CYLINDER HEAD & BONNET

(A)=4TNV98T-GGE2
(B)=
(C)=
(D)=
(E)=
(F)=

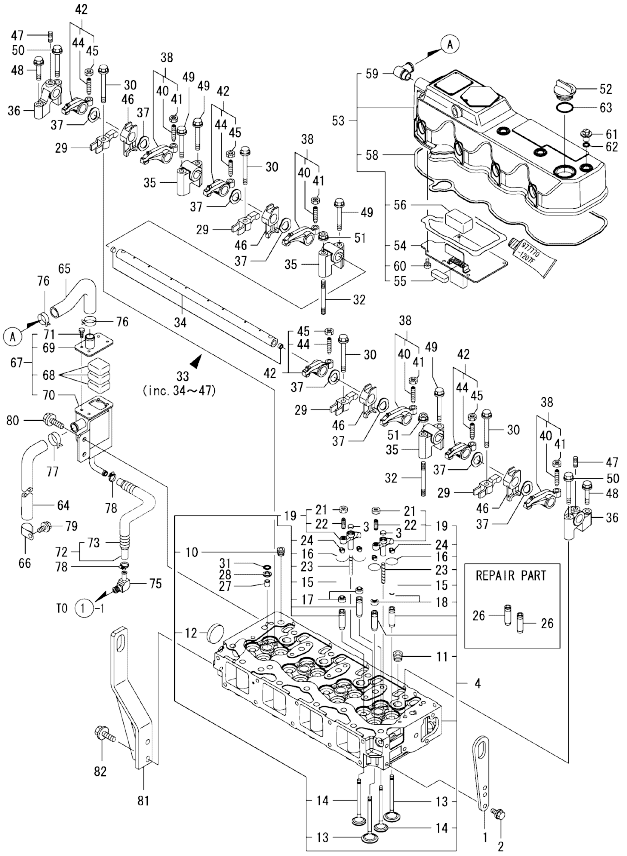

No.	Lev.	Parts No.	Description	Q'ty (A)	(B)	(C)	(D)	(E)	(F)	I	R
62	1	24311-000120	O-RING, 1AP12.0	4							
63	1	24311-000320	O-RING, 1AP32.0	1							
64	1	119006-03090	HOSE, BREATHER	1							
65	1	129908-03099	HOSE, BREATHER	1							
66	1	129150-03100	RETAINER, PIPE	1							
67	1	129908-03230	BREATHER ASSY	1							
68	2	123901-03240	FILTER	3							
69	2	129908-03240	COVER, BREATHER	1							
70	2	129908-03250	BREATHER	1							
71	2	26116-050102	BOLT, M5X 10 PLATED	4							
72	1	129935-03260	HOSE ASSY, RETURN	1							
73	2	129935-03270	TUBE, CORRUGATED	1							
75	1	123901-03280	ELBOW, PT3/8-10	1							
76	1	129410-03990	CLAMP, HOSE 21.5	2							
77	1	129960-03990	CLAMP, HOSE 19.8	1							
78	1	23000-022000	CLAMP, 22	2							
79	1	26106-080122	BOLT, M8X 12 PLATED	1							
80	1	26106-080142	BOLT, M8X 14 PLATED	2							
81	1	129937-07900	LIFTER	1							
82	1	26106-080222	BOLT, M8X 22 PLATED	2							

Remarks
(1)REPAIR PART.

N:Old ←Yes/No→ New. Q:Old ←No/Yes→ New. R:Old ←Yes/Yes→ New. S:Old ←No/No→ New. W:Add. Z:Discontinued. F:Interchangeable by set. K:Q'ty Change

Copyright (C) YANMAR GLOBAL CS CO., LTD. All RightsReserved.

Fig.5. SUCTION MANIFOLD & AIR CLEANER

(A)=4TNV98T-GGE2
(B)=
(C)=
(D)=
(E)=
(F)=

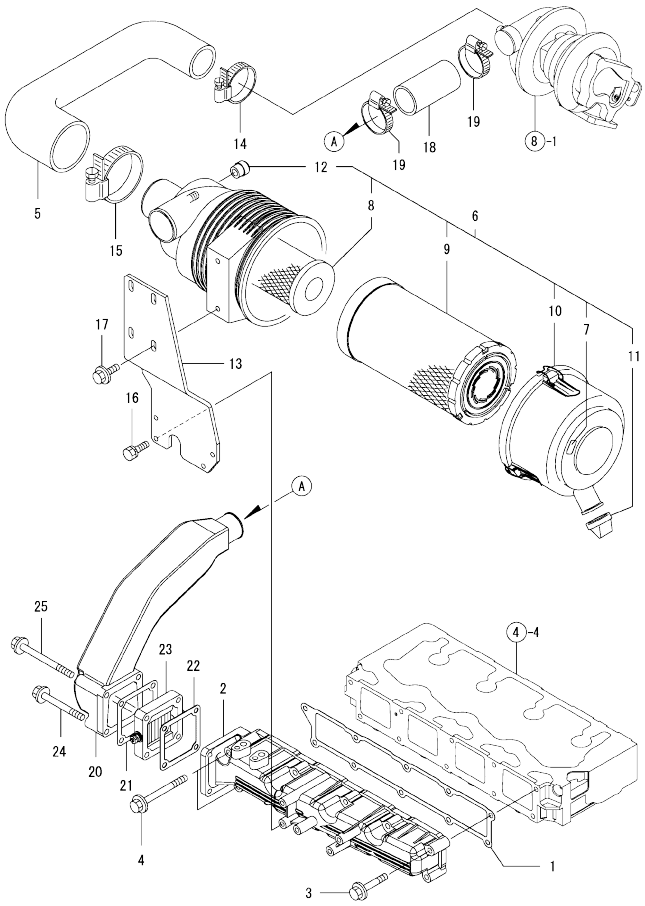

No.	Lev.	Parts No.	Description	Q'ty (A)	(B)	(C)	(D)	(E)	(F)	I	R
1	1	129907-12110	GASKET, MANIFOLD	1							
2	1	129944-12110	MANIFOLD, AIR INTAKE	1							
3	1	26106-080452	BOLT, M8X 45 PLATED	8							
4	1	26106-080802	BOLT, M8X 80 PLATED	2							
5	1	129935-12080	HOSE, AIR INTAKE	1							
6	1	129908-12500	CLEANER ASSY, AIR	1							
7	2	129612-12650	LABEL, MARKING	1							
8	2	119160-12570	ELEMENT, INNER	1							
9	2	129935-12520	ELEMENT, OUTER	1							
10	2	119160-12530	COVER ASSY, CLEANER	1							
11	2	119160-12540	VALVE, VACUATOR	1							
12	2	126650-12680	INDICATOR	1							
13	1	129944-12620	BRACKET, AIR CLEANER	1							
14	1	23000-060000	CLAMP, 60	1							
15	1	23000-090000	CLAMP, 90	1							
16	1	26013-080222	BOLT, M8X 22	4							
17	1	26106-080202	BOLT, M8X 20 PLATED	2							
18	1	123951-18220	JOINT, RUBBER B	1							
19	1	23000-054000	CLAMP, 54	2							
20	1	129935-18350	DUCT, AIR	1							
21	1	119129-77020	GASKET, AIR HEATER	1							
22	1	121850-77021	GASKET, AIR HEATER	1							
23	1	119005-77051	HEATER, AIR	1							
24	1	26106-080702	BOLT, M8X 70 PLATED	2							
25	1	26106-080902	BOLT, M8X 90 PLATED	2							

N:Old ←Yes/No→ New. Q:Old ←No/Yes→ New. R:Old ←Yes/Yes→ New. S:Old ←No/No→ New. W:Add. Z:Discontinued. F:Interchangeable by set. K:Q'ty Change

Copyright (C) YANMAR GLOBAL CS CO., LTD. All RightsReserved.

0CW10-M45300 4TNV98T-GGE2

Fig.6. EXHAUST MANIFOLD

(A)=4TNV98T-GGE2
(B)=
(C)=
(D)=
(E)=
(F)=

No.	Lev.	Parts No.	Description	Q'ty (A)	(B)	(C)	(D)	(E)	(F)	I	R
1	1	129935-13100	MANIFOLD, EXHAUST	1							
2	1	129900-13251	GASKET, MANIFOLD	1							
3	1	123900-13630	BOLT, M8X80	8							
4	1	129418-18320	STUD, M8X20	4							
5	1	123901-18080	GASKET, TURBINE OUT	1							

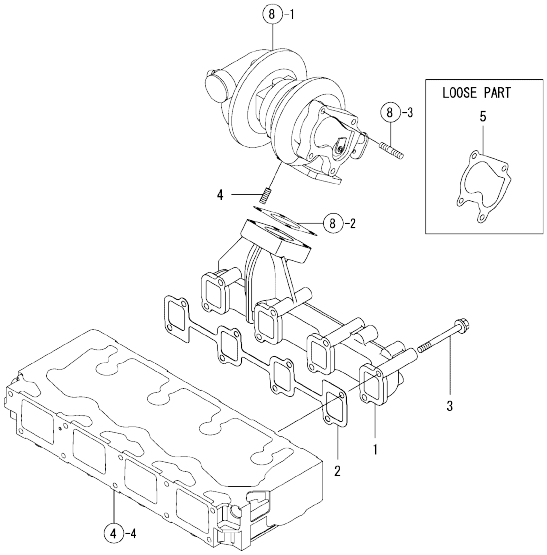

N:Old ◄Yes/No► New. Q:Old ◄No/Yes► New. R:Old ◄Yes/Yes► New. S:Old ◄No/No► New. W:Add. Z:Discontinued. F:Interchangeable by set. K:Q'ty Change

Copyright (C) YANMAR GLOBAL CS CO., LTD. All RightsReserved.

Fig.7. CAMSHAFT & DRIVING GEAR

(A)=4TNV98T-GGE2
(B)=
(C)=
(D)=
(E)=
(F)=

No.	Lev.	Parts No.	Description	Q'ty (A)	(B)	(C)	(D)	(E)	(F)	I	R
1	1	129150-14200	TAPPET	8							
2	1	129907-14400	ROD, PUSH	8							
3	1	129908-14581	CAMSHAFT ASSY	1							
4	2	129150-02450	METAL, THRUST	1							
6	2	129900-14100	GEAR, CAMSHAFT	1							
7	2	22512-070140	KEY, 7X 14	1							
8	1	26106-080162	BOLT, M8X 16 PLATED	2							
9	1	123900-25060	SHAFT, IDLE GEAR	1							
10	1	129900-25100	GEAR ASSY, IDLE	1							
13	1	129150-25920	BUSH, IDLE GEAR	1							1
14	1	26106-080552	BOLT, M8X 55 PLATED	3							
15	1	129953-25300	BOLT, PUMP BODY	4							
16	1	129907-25900	GEAR, PUMP	1							
17	1	158563-51150	FLANGE	1							
18	1	22217-180000	WASHER, SPRING 18	1							
19	1	26776-180002	NUT, LOCK M18	1							

Remarks
(1)REPAIR PART.

N:Old ←Yes/No→ New. Q:Old ←No/Yes→ New. R:Old ←Yes/Yes→ New. S:Old ←No/No→ New. W:Add. Z:Discontinued. F:Interchangeable by set. K:Q'ty Change

Copyright (C) YANMAR GLOBAL CS CO., LTD. All RightsReserved.

Fig.8. TURBINE

(A)=4TNV98T-GGE2
(B)=
(C)=
(D)=
(E)=
(F)=

No.	Lev.	Parts No.	Description	Q'ty (A)	(B)	(C)	(D)	(E)	(F)	I	R
1	1	129935-18010	TURBINE, RHF5	1							
2	1	129472-18090	GASKET, TURBINE IN	1							
3	1	119131-18320	STUD, M8X22	4							
4	1	26306-080002	NUT, M8	4							

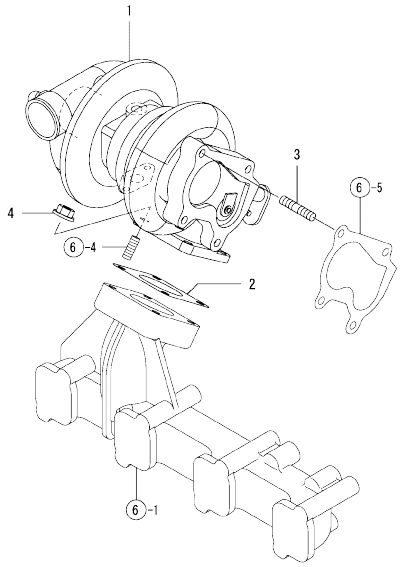

N:Old ◄Yes/No► New. Q:Old ◄No/Yes► New. R:Old ◄Yes/Yes► New. S:Old ◄No/No► New. W:Add. Z:Discontinued. F:Interchangeable by set. K:Q'ty Change

Copyright (C) YANMAR GLOBAL CS CO., LTD. All RightsReserved.

Fig.9. CRANKSHAFT & PISTON

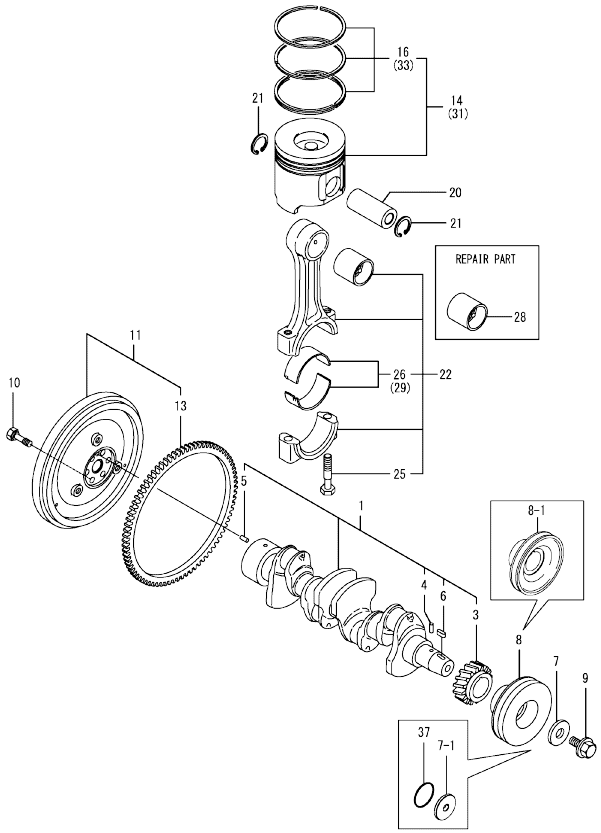

Remarks
(1)REPAIR PART.
(2)UNDER-SIZED(U.S=0.25)PART.
(3)OVER-SIZED(O.S=0.25)PART.

(A)=4TNV98T-GGE2 (D)=
(B)= (E)=
(C)= (F)=

No.	Lev.	Parts No.	Description	Q'ty (A)	(B)	(C)	(D)	(E)	(F)	I	R
1	1	129908-21000	CRANKSHAFT ASSY	1							
3	2	129900-21200	GEAR, CRANKSHAFT	1							
4	2	121850-21290	PIN, CRANK GEAR	1							
5	2	121850-21920	PIN, PARALLEL 10X22	1							
6	2	22512-070140	KEY, 7X 14	1							
7	1	129900-21640	WASHER	1							
7-1	1	129960-21940	WASHER, V-PULLEY	1						N	
	(A=*2018.08)										
8	1	129907-21660	V-PULLEY, CRANKSHAFT	1							
8-1	1	129900-21660	V-PULLEY, CRANKSHAFT	1						R	
	(A=*2010.12)										
9	1	129916-21610	BOLT, V-PULLEY	1							
10	1	121850-21130	BOLT, FLYWHEEL	6							
11	1	129920-21580	FLYWHEEL ASSY	1							
13	2	127410-21480	GEAR, RING Z=129	1							
14	1	129908-22080	PISTON ASSY	4							
16	2	129907-22050	RING SET, PISTON	4							
20	1	120130-22301	PIN, PISTON	4							
21	1	22252-000300	RING, 30	8							
22	1	129900-23001	ROD ASSY, CONNECTING	4							
25	2	129900-23200	BOLT, CONNECTING ROD	8							
26	2	129900-23601	METAL ASSY,CRANK PIN	4							
28	1	129900-23911	METAL, PISTON PIN	4							1
29	1	129900-23611	METAL ASSY, PIN .25	4							2
31	1	729908-22900	PISTON ASSY, 0.25 OS	4							3
33	2	729907-22950	RING SET, PISTON .25	4							3
37	1	129960-21930	GASKET, WASHER	1						W	
	(A=*2018.08)										

N:Old $\frac{\text{Yes}}{\text{No}}$ New. Q:Old $\frac{\text{No}}{\text{Yes}}$ New. R:Old $\frac{\text{Yes}}{\text{Yes}}$ New. S:Old $\frac{\text{No}}{\text{No}}$ New. W:Add. Z:Discontinued. F:Interchangeable by set. K:Q'ty Change

Copyright (C) YANMAR GLOBAL CS CO., LTD. All RightsReserved.

Fig.10. LUB.OIL SYSTEM

(A)=4TNV98T-GGE2
(B)=
(C)=
(D)=
(E)=
(F)=

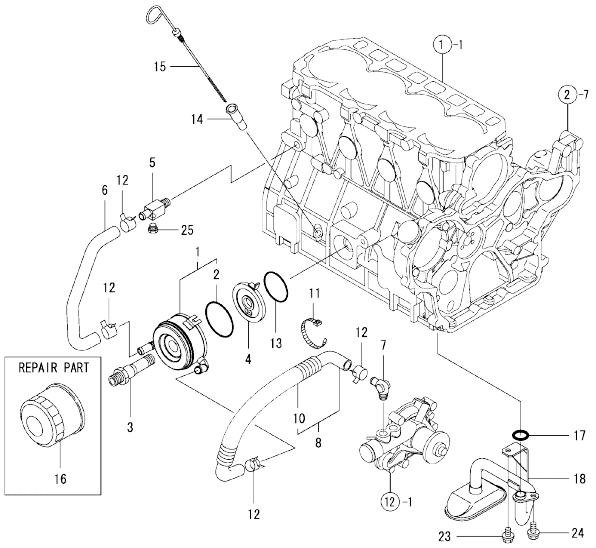

No.	Lev.	Parts No.	Description	Q'ty (A)	(B)	(C)	(D)	(E)	(F)	I	R
1	1	129908-33010	COOLER ASSY, OIL	1							
2	2	123912-33050	O-RING	1							
3	1	123912-33100	BOLT, COOLER	1							
4	1	129908-33101	BRACKET, COOLER	1							
5	1	129006-44480	JOINT, R02	1							
6	1	129908-49060	HOSE, WATER	1							
7	1	129466-49300	ELBOW, PT3/8	1							
8	1	123910-49600	HOSE ASSY, WATER	1							
10	2	123910-49610	TUBE, CORRUGATED	1							
11	1	121750-59890	BAND, NYLON	1							
12	1	23000-025000	CLAMP, 25	4							
13	1	24321-000600	O-RING, 1AG60.0	1							
14	1	121520-34810	GUIDE, DIPSTICK	1							
15	1	129953-34830	DIPSTICK, OIL	1							
16	1	129150-35170	FILTER ASSY, D80X80L	1							
17	1	129900-32030	O-RING, P20	1							
18	1	129953-35000	PIPE ASSY, OIL INLET	1							
23	1	26106-080122	BOLT, M8X 12 PLATED	1							
24	1	26106-080162	BOLT, M8X 16 PLATED	1							
25	1	171056-49120	PLUG, DRAIN R1/4	1							

Remarks
(1)REPAIR PART.

N:Old ←Yes/No→ New. Q:Old ←No/Yes→ New. R:Old ←Yes/Yes→ New. S:Old ←No/No→ New. W:Add. Z:Discontinued. F:Interchangeable by set. K:Q'ty Change

Copyright (C) YANMAR GLOBAL CS CO., LTD. All RightsReserved.

Fig.11. LUB.OIL LINE

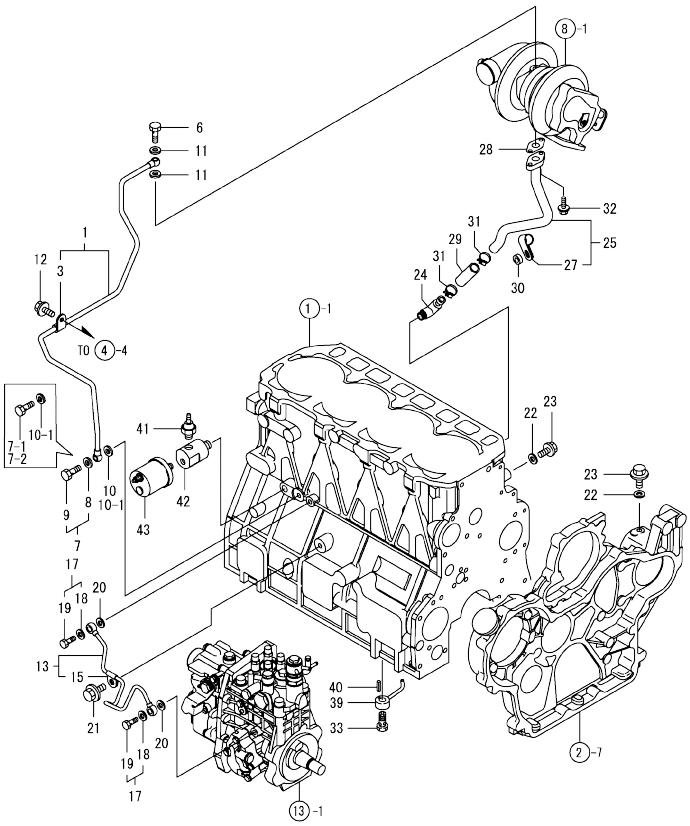

(A)=4TNV98T-GGE2
(B)=
(C)=
(D)=
(E)=
(F)=

No.	Lev.	Parts No.	Description	Q'ty (A)	(B)	(C)	(D)	(E)	(F)	I	R
1	1	129935-39040	PIPE ASSY, OIL	1							
3	2	124223-39900	RETAINER	1							
6	1	121252-39150	BOLT, JOINT M10X1.5	1							
7	1	129005-59830	BOLT ASSY, JOINT M8	1							
7-1	1	105010-39140	BOLT, PIPE JOINT M8	1						S	
	(A=*2010.06)										
7-2	1	129198-59540	BOLT, PIPE JOINT M8	1						S	
	(A=*2020.06)										
8	2	22190-080002	WASHER, SEAL 8	1						Z	
	(A=*2010.06)										
9	2	23857-030000	BOLT, JOINT 3	1						Z	
	(A=*2010.06)										
10	1	22190-080002	WASHER, SEAL 8	1							
10-1	1	22190-080002	WASHER, SEAL 8	2						K	
	(A=*2010.06)										
11	1	23414-100000	GASKET, 10X1.0	2							
12	1	26106-080122	BOLT, M8X 12 PLATED	1							
13	1	129907-39061	PIPE ASSY, OIL	1							
15	2	123907-39500	RETAINER, PIPE	1							
17	1	129005-59830	BOLT ASSY, JOINT M8	2							
18	2	22190-080002	WASHER, SEAL 8	2							
19	2	23857-030000	BOLT, JOINT 3	2							
20	1	22190-080002	WASHER, SEAL 8	2							
21	1	26106-080122	BOLT, M8X 12 PLATED	1							
22	1	22190-080002	WASHER, SEAL 8	2							
23	1	26106-080122	BOLT, M8X 12 PLATED	2							
24	1	124070-13300	ELBOW, PT3/8	1							
25	1	129935-39610	PIPE, OIL RETURN	1							
27	2	123910-39850	RETAINER	1							
28	1	129908-39690	GASKET, RETURN PIPE	1							
29	1	123901-39820	HOSE, OIL RETURN	1							
30	1	106500-44810	COLLAR, PULLEY	1							
31	1	23000-025000	CLAMP, 25	2							
32	1	26106-060162	BOLT, M6X 16 PLATED	2							
33	1	129908-39410	VALVE ASSY, CHECK	4							
39	1	119000-39650	NOZZLE, COOLING	4							
40	1	22351-030010	PIN, SPRING 3.0X10	4							
41	1	114250-39450	SWITCH, HYDRAULIC	1							
42	1	171375-39601	DAMPER, 1/8	1							
43	1	119773-91501	SENSOR, OIL PRESSURE	1							

N:Old ←Yes/No→ New. Q:Old ←No/Yes→ New. R:Old ←Yes/Yes→ New. S:Old ←No/No→ New. W:Add. Z:Discontinued. F:Interchangeable by set. K:Q'ty Change

Copyright (C) YANMAR GLOBAL CS CO., LTD. All RightsReserved.

Fig.12. COOLING WATER SYSTEM

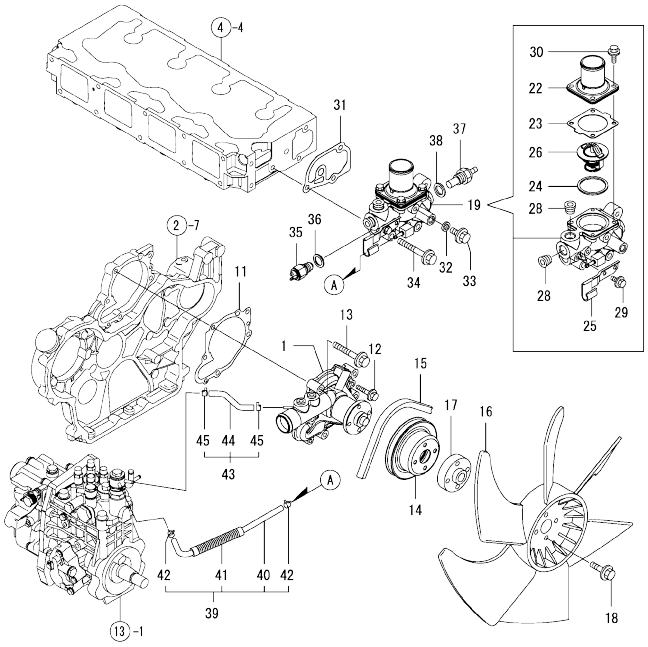

(A)=4TNV98T-GGE2 (D)=
(B)= (E)=
(C)= (F)=

No.	Lev.	Parts No.	Description	Q'ty (A)	(B)	(C)	(D)	(E)	(F)	I	R
1	1	129907-42000	PUMP ASSY, WATER	1							
11	1	129900-42020	GASKET, WATER PUMP	1							
12	1	26106-060302	BOLT, M6X 30 PLATED	2							
13	1	26106-080552	BOLT, M8X 55 PLATED	5							
14	1	129900-42461	V-PULLEY, PUMP	1							
15	1	25132-004150	V-BELT, A41.5	1							
16	1	129916-44740	FAN, COOLING D=430	1							
17	1	119130-44760	SPACER, FAN	1							
18	1	26106-080302	BOLT, M8X 30 PLATED	4							
19	1	129907-49800	CASE ASSY,THERMOSTAT	1							
22	2	129916-49530	COVER, THERMOSTAT	1							
23	2	121850-49540	GASKET, THERMOSTAT	1							
24	2	121850-49550	GASKET, THERMOSTAT	1							
25	2	129907-49730	RETAINER, PIPE	1							
26	2	121850-49810	THERMOSTAT, 71C	1							
28	2	23875-030000	PLUG, R03	2							
29	2	26106-060122	BOLT, M6X 12 PLATED	1							
30	2	26106-060202	BOLT, M6X 20 PLATED	4							
31	1	129900-49870	GASKET, THERMOSTAT	1							
32	1	23414-080000	GASKET, 8X1.0	1							
33	1	26106-080122	BOLT, M8X 12 PLATED	1							
34	1	26106-080602	BOLT, M8X 60 PLATED	3							
35	1	121250-44901	SWITCH, TEMPERATURE	1							
36	1	124465-44950	GASKET, 16	1							
37	1	124250-49351	SENSOR, WATER TEMP.	1							
38	1	129150-49360	GASKET, 10	1							
39	1	129907-49610	HOSE ASSY, WATER A	1							
40	2	129907-49710	HOSE, WATER A	1							
41	2	129907-49750	TUBE, CORRUGATED	1							
42	2	124722-59050	CLAMP, HOSE 9	2							
43	1	129907-49620	HOSE ASSY, WATER B	1							
44	2	129907-49720	HOSE, WATER B	1							
45	2	124722-59050	CLAMP, HOSE 9	2							

N:Old ←Yes/No→ New. Q:Old ←No/Yes→ New. R:Old ←Yes/Yes→ New. S:Old ←No/No→ New. W:Add. Z:Discontinued. F:Interchangeable by set. K:Q'ty Change

Copyright (C) YANMAR GLOBAL CS CO., LTD. All RightsReserved.

Fig.13. FUEL INJECTION PUMP

(A)=4TNV98T-GGE2
(B)=
(C)=
(D)=
(E)=
(F)=

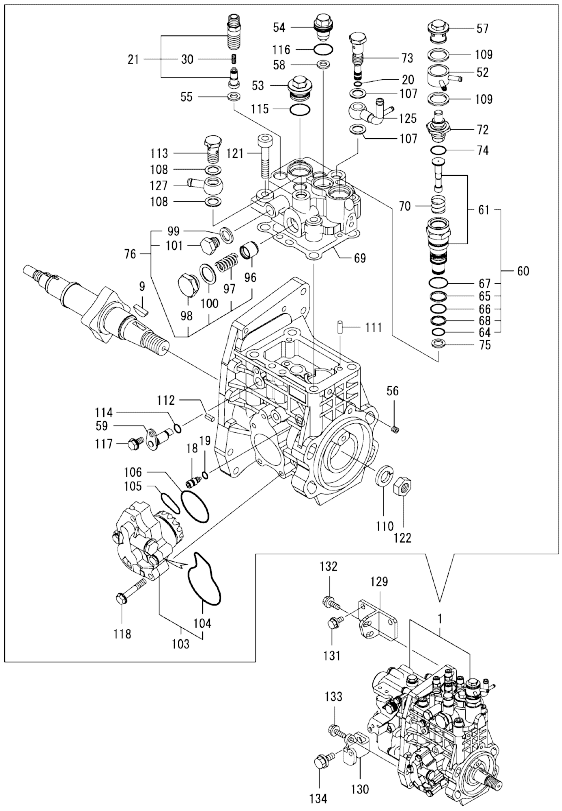

Remarks
(1)GOVERNOR ASSY(FIG.14) IS INCORPORATED IN THIS FUEL INJECTION PUMP.(REF.NO.1).

No.	Lev.	Parts No.	Description	Q'ty (A)	(B)	(C)	(D)	(E)	(F)	I	R
1	1	729937-51390	PUMP ASSY, INJECTION	1							1
9	3	144626-51090	KEY, FEATHER 5X19	1							
18	3	158600-51270	STOPPER, TAPPET	1							
19	3	158563-51281	O-RING, 4D S6	1							
20	3	158563-51281	O-RING, 4D S6	1							
21	3	129509-51390	VALVE ASSY, DELIVERY	4							
30	4	158563-51330	SPRING, DELIVERY	4							
52	3	158553-51551	JOINT, COOLING WATER	1							
53	3	158601-51550	PLUG, M22	1							
54	3	129907-51560	PLUG, M16	1							
55	3	158552-51571	GASKET, BARREL PLUG	4							
56	3	158557-51570	PLUG, RACK	1							
57	3	158601-51570	PLUG	1							
58	3	129906-51580	GASKET, BARREL PLUG	1							
59	3	158552-51580	LIFTER, LINK	1							
60	3	119802-51590	TIMER ASSY	1							
61	4	119802-51600	TIMER ASSY	1							
64	4	158553-51670	O-RING, PUMP TIMER	1							
65	4	119802-51680	RING, BACKUP	1							
66	4	119802-51690	O-RING, 1016	1							
67	4	24356-010200	O-RING, 4D1020	1							
68	4	24372-000150	RING, BACK UP T2P15	1							
69	3	158560-51600	GASKET, HEAD	1							
70	3	158553-51630	SPRING, TIMER	1							
72	3	158553-51640	ELEMENT, THERMOSTAT	1							
73	3	158601-51650	JOINT, OVERFLOW	1							
74	3	158553-51660	O-RING, P14	1							
75	3	158553-51680	GASKET, TIMER	1							
76	3	129936-51741	HEAD ASSY, HYDRAULIC	1							
96	4	158601-51770	PISTON, ACCUMLATOR	1							
97	4	158552-51781	SPRING, ACCUMULATOR	1							
98	4	158601-51790	PLUG, ACCUMULATOR	1							
99	4	22190-120002	WASHER, SEAL 12	1							
100	4	22190-180002	WASHER, SEAL 18	1							
101	4	23887-120002	PLUG, 12	1							
103	3	158552-52100	PUMP ASSY, FUEL FEED	1							
104	4	158552-52500	O-RING, PUMP INNER	1							
105	3	158552-52310	O-RING, FEED PUMP	1							
106	3	158552-52400	O-RING, 4E S42	1							
107	3	22190-120002	WASHER, SEAL 12	2							
108	3	22190-120002	WASHER, SEAL 12	2							
109	3	22190-180002	WASHER, SEAL 18	2							
110	3	22217-180000	WASHER, SPRING 18	1							
111	3	22312-050140	PIN, PARALLEL 5X14	2							
112	3	22351-050010	PIN, SPRING 5.0X10	2							
113	3	23857-060000	BOLT, JOINT 6	1							
114	3	24311-000070	O-RING, 1AP7.0	1							
115	3	24356-010200	O-RING, 4D1020	1							
116	3	24356-020210	O-RING, 4D2021	1							
117	3	26106-060102	BOLT, M6X 10 PLATED	1							
118	3	26106-060352	BOLT, M6X 35 PLATED	4							

N:Old ←Yes/No→ New. Q:Old ←No/Yes→ New. R:Old ←Yes/Yes→ New. S:Old ←No/No→ New. W:Add. Z:Discontinued. F:Interchangeable by set. K:Q'ty Change

++ CONTINUE ++

Copyright (C) YANMAR GLOBAL CS CO., LTD. All RightsReserved.

Fig.13. FUEL INJECTION PUMP

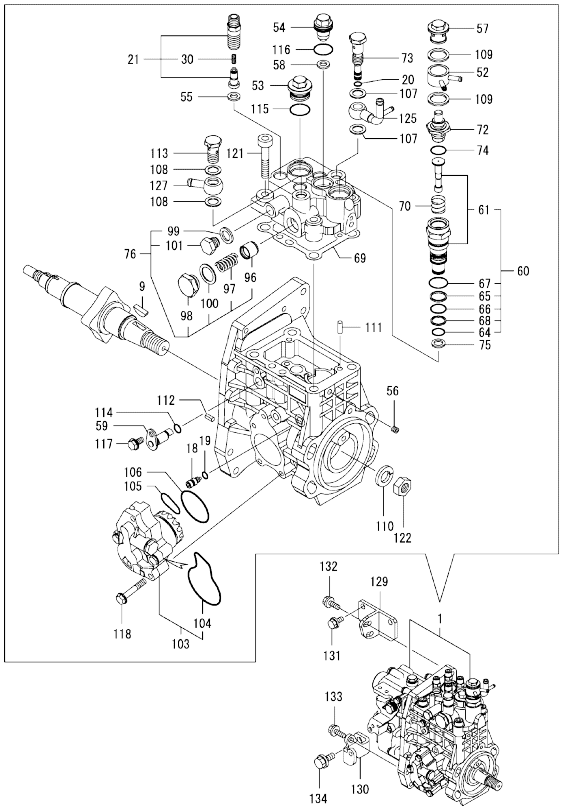

Remarks
(1)GOVERNOR ASSY(FIG.14) IS INCORPORATED IN THIS FUEL INJECTION PUMP.(REF.NO.1).

(A)=4TNV98T-GGE2 (D)=
(B)= (E)=
(C)= (F)=

No.	Lev.	Parts No.	Description	Q'ty (A)	(B)	(C)	(D)	(E)	(F)	I	R
121	3	26450-100452	BOLT, M10X 45	4							
122	3	26776-180002	NUT, LOCK M18	1							
125	2	158552-51670	JOINT, OVERFLOW	1							
127	2	129916-59020	JOINT, PIPE 12	1							
129	1	129907-01950	RETAINER, PUMP UPPER	1							
130	1	129907-01960	RETAINER, PUMP LOWER	1							
131	1	26106-080162	BOLT, M8X 16 PLATED	2							
132	1	26106-080222	BOLT, M8X 22 PLATED	2							
133	1	26106-080222	BOLT, M8X 22 PLATED	1							
134	1	26106-100202	BOLT, M10X 20 PLATED	1							

N:Old ←Yes/No→ New. Q:Old ←No/Yes→ New. R:Old ←Yes/Yes→ New. S:Old ←No/No→ New. W:Add. Z:Discontinued. F:Interchangeable by set. K:Q'ty Change

Copyright (C) YANMAR GLOBAL CS CO., LTD. All RightsReserved.

Fig.14. GOVERNOR

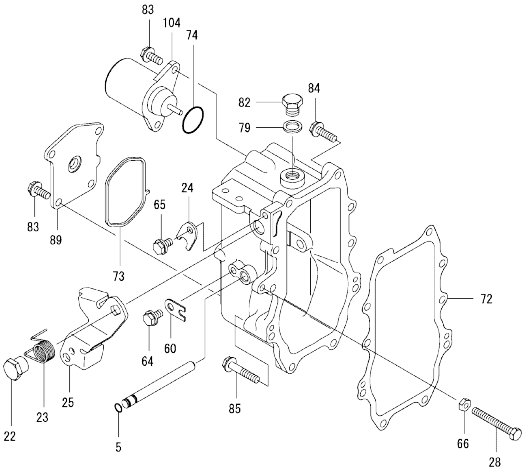

Remarks
* THIS FIGURE(GOVERNOR ASSY)IS INCORPORATED IN THE FUEL INJECTION PUMP ASSY(FIG.13).

(A)=4TNV98T-GGE2 (D)=
(B)= (E)=
(C)= (F)=

No.	Lev.	Parts No.	Description	Q'ty (A)	(B)	(C)	(D)	(E)	(F)	I	R
5	4	129155-51280	O-RING, S6	1							
22	4	129255-61410	NUT, CONTROL LEVER	1							
23	4	119807-61420	SPRING, RETURN	1							
24	4	158560-61430	STOPPER, SHAFT	1							
25	4	129937-61440	LEVER, REGULATOR	1							
28	4	129155-61460	BOLT, IDLE LIMIT	1							
60	4	119660-61901	STOPPER, SHAFT	1							
64	4	26106-060102	BOLT, M6X 10 PLATED	1							
65	4	26106-060102	BOLT, M6X 10 PLATED	1							
66	4	26756-060002	NUT, LOCK M6	1							
72	3	158560-61050	GASKET, CASE	1							
73	3	158560-61071	GASKET, CASE	1							
74	3	158552-61900	O-RING	1							
79	3	22190-160002	WASHER, SEAL 16	1							
82	3	23887-160002	PLUG, 16	1							
83	3	26106-060142	BOLT, M6X 14 PLATED	6							
84	3	26106-060252	BOLT, M6X 25 PLATED	8							
85	3	26106-060402	BOLT, M6X 40 PLATED	2							
89	3	129946-61061	COVER, GOVERNOR CASE	1							
104	2	119653-77950	SOLENOID, STOP	1							

N:Old ←Yes/No→ New. Q:Old ←No/Yes→ New. R:Old ←Yes/Yes→ New. S:Old ←No/No→ New. W:Add. Z:Discontinued. F:Interchangeable by set. K:Q'ty Change

Copyright (C) YANMAR GLOBAL CS CO., LTD. All RightsReserved.

Fig.15. FUEL INJECTION VALVE

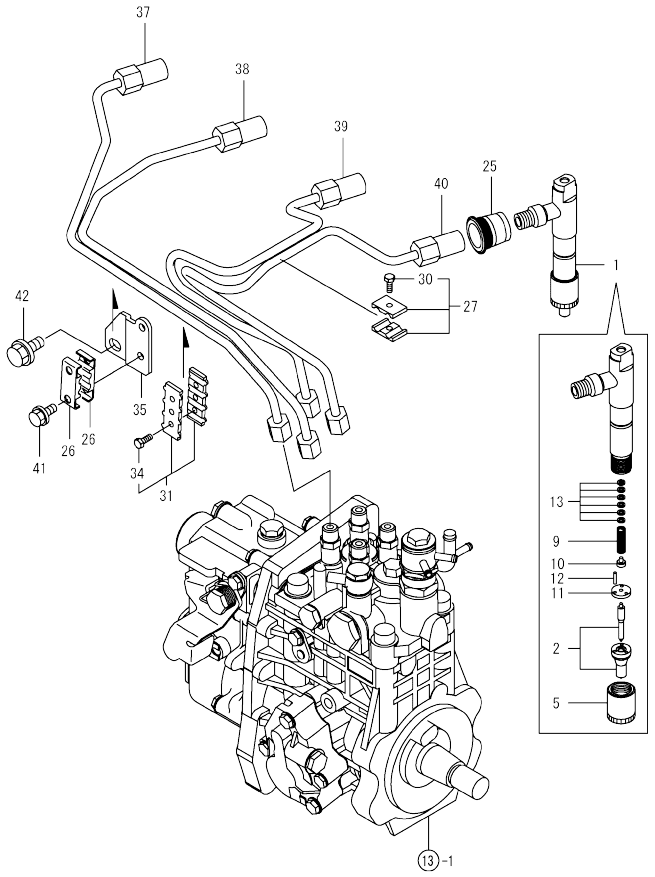

(A)=4TNV98T-GGE2 (D)=
(B)= (E)=
(C)= (F)=

No.	Lev.	Parts No.	Description	Q'ty (A)	(B)	(C)	(D)	(E)	(F)	I	R
1	1	729906-53100	VALVE ASSY,INJECTION	4							
2	2	129906-53000	VALVE ASSY,INJECTION	4							
5	2	114250-53080	NUT, NOZZLE	4							
9	2	114250-53120	SPRING, NOZZLE	4							
10	2	114250-53130	SEAT, SPRING	4							
11	2	114250-53140	SPACER, VALVE STOP	4							
12	2	114250-53210	PIN, POSITIONING	8							
13	2	114250-53400	SHIM SET	4							
25	1	123907-11601	SEAL, PIPE	4							
26	1	122780-59100	RETAINER, PIPE	2							
27	1	119305-59120	RETAINER, PIPE	1							
30	2	129150-59131	BOLT, M4X14	1							
31	1	129550-59120	RETAINER, PIPE	1							
34	2	129150-59131	BOLT, M4X14	2							
35	1	129907-59720	SUPPORT, PIPE CLAMP	1							
37	1	129908-59810	PIPE ASSY, INJECTION	1							
38	1	129908-59820	PIPE ASSY, INJECTION	1							
39	1	129908-59830	PIPE ASSY, INJECTION	1							
40	1	129908-59840	PIPE ASSY, INJECTION	1							
41	1	26106-060162	BOLT, M6X 16 PLATED	2							
42	1	26106-080182	BOLT, M8X 18 PLATED	1							

N:Old ←Yes/No→ New. Q:Old ←No/Yes→ New. R:Old ←Yes/Yes→ New. S:Old ←No/No→ New. W:Add. Z:Discontinued. F:Interchangeable by set. K:Q'ty Change

Copyright (C) YANMAR GLOBAL CS CO., LTD. All RightsReserved.

Fig.16. FUEL LINE

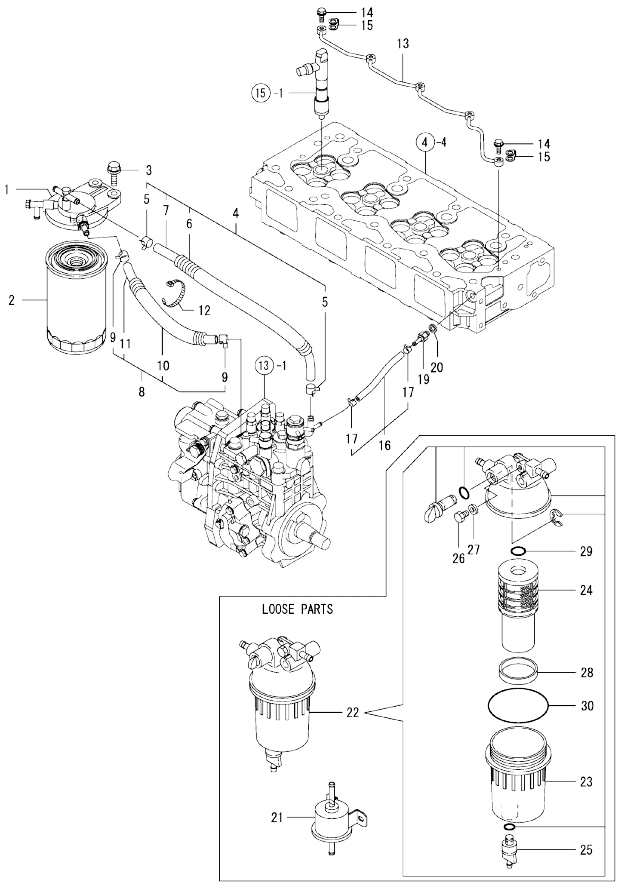

(A)=4TNV98T-GGE2 (D)=
(B)= (E)=
(C)= (F)=

No.	Lev.	Parts No.	Description	Q'ty (A)	(B)	(C)	(D)	(E)	(F)	I	R
1	1	129004-55612	BRACKET, FILTER	1							
2	1	123907-55810	FILTER, FUEL	1							
2-1	1	129907-55810	FILTER, FUEL	1						N	
	(A=*2010.09)										
3	1	26106-080302	BOLT, M8X 30 PLATED	2							
4	1	129457-59010	HOSE ASSY, FUEL	1							
5	2	124766-59050	CLAMP, HOSE 11.5	2							
6	2	129957-59120	TUBE, CORRUGATED 15	1							
7	2	105025-59750	HOSE, FUEL	1							
8	1	129981-59010	HOSE ASSY, FUEL	1							
9	2	124766-59050	CLAMP, HOSE 11.5	2							
10	2	129950-59221	TUBE, CORRUGATED 15	1							
11	2	129980-59510	HOSE, FUEL	1							
12	1	121750-59890	BAND, NYLON	1							
13	1	129907-59140	PIPE ASSY, RETURN	1							
14	1	123907-59540	BOLT, PIPE JOINT M6	5							
15	1	123907-59550	GASKET, FUEL RETURN	5							
16	1	129486-59551	HOSE ASSY, RETURN	1							
17	2	124722-59050	CLAMP, HOSE 9	2							
19	1	123907-59560	JOINT, HOSE	1							
20	1	22190-080002	WASHER, SEAL 8	1							
21	1	119225-52102	PUMP, FUEL FEED	1							1
22	1	129242-55700	SEPARATOR ASSY,WATER	1							1
23	2	129242-55720	CUP, SEPARATOR	1							1
24	2	129242-55730	ELEMENT, FUEL FILTER	1							1
25	2	129242-55740	PLUG, DRAIN	1							1
26	2	129242-55750	VALVE, AIR VENT	1							1
27	2	129242-55760	GASKET, PLUG	1							1
28	2	129242-55770	FLOAT	1							1
29	2	24311-000160	O-RING, 1AP16.0	1							1
30	2	24321-000750	O-RING, 1AG75.0	1							1

Remarks
(1)Loose parts.

N:Old $\frac{\text{Yes}}{\text{No}}$ New. Q:Old $\frac{\text{No}}{\text{Yes}}$ New. R:Old $\frac{\text{Yes}}{\text{Yes}}$ New. S:Old $\frac{\text{No}}{\text{No}}$ New. W:Add. Z:Discontinued. F:Interchangeable by set. K:Q'ty Change

Copyright (C) YANMAR GLOBAL CS CO., LTD. All RightsReserved.

Fig.17. STARTING MOTOR

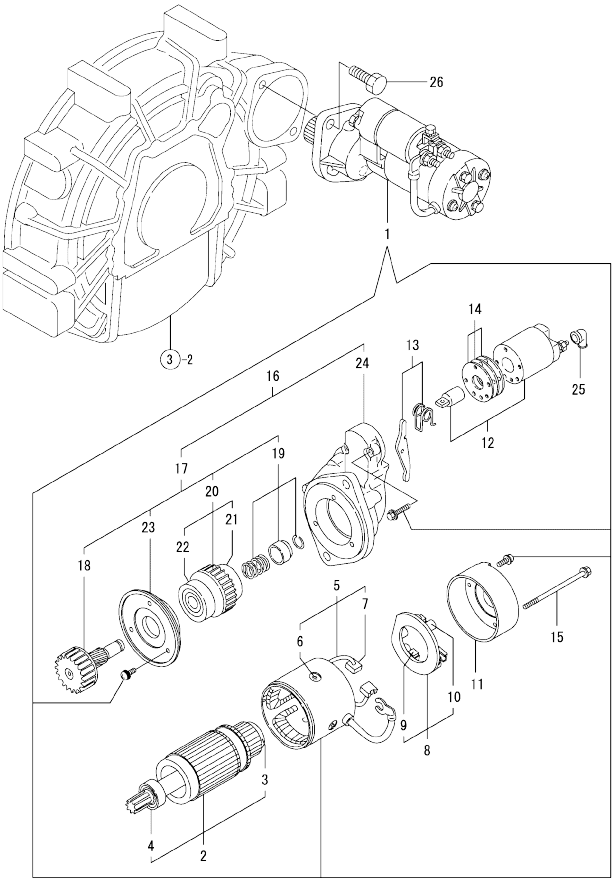

(A)=4TNV98T-GGE2
(B)=
(C)=
(D)=
(E)=
(F)=

No.	Lev.	Parts No.	Description	Q'ty (A)	(B)	(C)	(D)	(E)	(F)	I	R
1	1	129900-77010	STARTER, 12V 2.3KW	1							
2	2	129900-77400	ARMATURE ASSY	1							
3	3	X2114155110	BEARING, BALL	1							
4	3	X2114255110	BEARING, BALL	1							
5	2	129900-77440	COIL ASSY, FIELD	1							
6	3	171008-77450	SCREW, CORE SET	4							
7	3	129900-77450	BRUSH, +	2							
8	2	129900-77480	HOLDER ASSY, BRUSH	1							
9	3	129900-77450	BRUSH, +	2							
10	3	X2130631300	SPRING, BRUSH	4							
11	2	129900-77460	COVER, REAR	1							
12	2	129900-77591	SWITCH ASSY, MAGNET	1							
13	2	129900-77620	LEVER SET, SHIFT	1							
14	2	129900-77650	COVER KIT, DUST	1							
15	2	129900-77640	BOLT, THROUGH	2							
16	2	129900-77700	CASE ASSY, GEAR	1							
17	3	129900-77510	PINION ASSY,W/CLUTCH	1							
18	4	129900-77540	SHAFT, PINION	1							
19	4	129900-77550	STOPPER SET, PINION	1							
20	4	129900-77520	CLUTCH ASSY	1							
21	5	171008-77730	BEARING, BALL 3	1							
22	5	171008-77740	BEARING, BALL 4	1							
23	4	129900-77610	RETAINER, BEARING	1							
24	3	129900-77710	CASE, GEAR	1							
25	2	171008-77750	COVER, TERMINAL	1							
26	1	26116-120302	BOLT, M12X 30 PLATED	2							

N:Old ←Yes/No→ New. Q:Old ←No/Yes→ New. R:Old ←Yes/Yes→ New. S:Old ←No/No→ New. W:Add. Z:Discontinued. F:Interchangeable by set. K:Q'ty Change

Copyright (C) YANMAR GLOBAL CS CO., LTD. All RightsReserved.

Fig.21. (17A)STARTING MOTOR

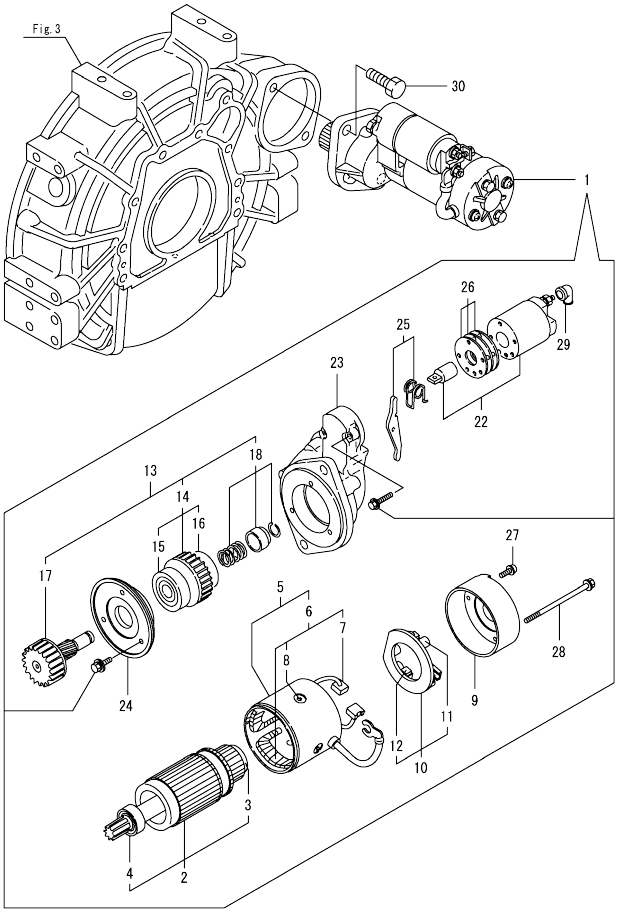

(A)=4TNV98T-GGE2
(B)=
(C)=
(D)=
(E)=
(F)=

No.	Lev.	Parts No.	Description	Q'ty (A)	(B)	(C)	(D)	(E)	(F)	I	R
1	1	129900-77040	STARTER, 12V 2.3KW	1							
2	2	129900-77120	ARMATURE ASSY	1							
3	3	171008-77410	BEARING, BALL 1	1							
4	3	171008-77420	BEARING, BALL 2	1							
5	2	129900-77130	YOKE ASSY	1							
6	3	129900-77140	COIL ASSY, FIELD	1							
7	4	129900-77450	BRUSH, +	2							
8	4	171008-77450	SCREW, CORE SET	4							
9	2	129900-77150	COVER, REAR	1							
10	2	129900-77160	HOLDER ASSY, BRUSH	1							
11	3	X2130631300	SPRING, BRUSH	4							
12	3	129900-77450	BRUSH, +	2							
13	2	129900-77170	CLUTCH ASSY, PINION	1							
14	3	129900-77180	CLUTCH ASSY	1							
15	4	129900-77190	BEARING, BALL 4	1							
16	4	X2114955020	BEARING, BALL	1							
17	3	129900-77270	SHAFT, PINION	1							
18	3	171008-77670	STOPPER SET, PINION	1							
22	2	129900-77280	SWITCH ASSY, MAGNET	1							
23	2	129900-77290	CASE, GEAR	1							
24	2	129900-77380	RETAINER, BEARING	1							
25	2	129900-77390	LEVER ASSY, SHIFT	1							
26	2	129900-77420	COVER KIT, DUST	1							
27	2	129900-77430	SCREW, M4X10	2							
28	2	129685-77640	BOLT, THROUGH	2							
29	2	171008-77750	COVER, TERMINAL	1							
30	1	26116-120302	BOLT, M12X 30 PLATED	2							

N:Old ←Yes/No→ New. Q:Old ←No/Yes→ New. R:Old ←Yes/Yes→ New. S:Old ←No/No→ New. W:Add. Z:Discontinued. F:Interchangeable by set. K:Q'ty Change

Copyright (C) YANMAR GLOBAL CS CO., LTD. All RightsReserved.

Fig.18. GENERATOR

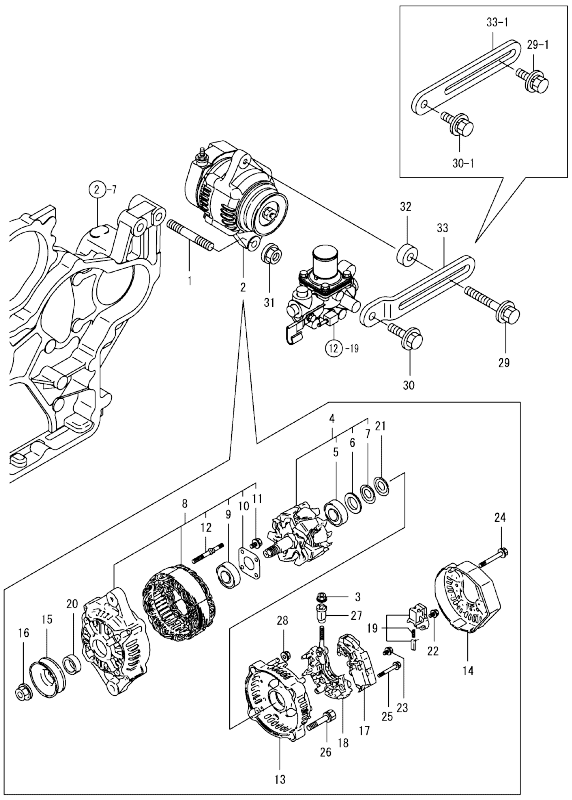

Remarks
(1) Interchangeable by simultaneous replacement with Ref.29-1, 30-1 and 33-1.

(A)=4TNV98T-GGE2 (D)=
(B)= (E)=
(C)= (F)=

No.	Lev.	Parts No.	Description	Q'ty (A)	(B)	(C)	(D)	(E)	(F)	I	R
1	1	129795-01900	BOLT, M10X30	1							
2	1	129423-77200	GENERATOR, 12V-40A	1							
3	2	X9490561001	NUT	1							
4	2	119620-77380	ROTOR ASSY	1							
5	3	123501-79240	BEARING, BALL	1							
6	3	119620-79250	COVER, BEARING	1							
7	3	119620-79360	WASHER, THRUST	1							
8	2	119620-77421	FRAME ASSY, DRIVE	1							
9	3	119620-79200	BEARING, BALL	1							
10	3	119620-79210	PLATE, RETAINER	1							
11	3	119620-79220	SCREW	4							
12	3	119620-79230	STUD	2							
13	2	119620-77440	FRAME ASSY, REAR	1							
14	2	129240-79300	COVER	1							
15	2	119620-77461	PULLEY, GENERATOR	1							
16	2	119620-77471	NUT	1							
17	2	129423-77710	REGULATOR ASSY	1							
18	2	119620-79260	HOLDER ASSY	1							
19	2	129052-79270	HOLDER ASSY, BRUSH	1							
20	2	119620-77490	COLLAR	1							
21	2	119620-79360	WASHER, THRUST	1							
22	2	119620-79290	SCREW	1							
23	2	119620-79300	SCREW	1							
24	2	119620-79310	BOLT	3							
25	2	119620-79320	SCREW, W/WASHER	2							
26	2	119620-79330	BOLT	2							
27	2	119620-79340	BUSH, INSULATION	1							
28	2	119620-79350	NUT	2							
29	1	129972-77341	BOLT, ADJUSTER L=50	1							
29-1	1	119810-77340	BOLT, ADJUSTER L=30	1						S	1
	(A=EXXXXX)										
30	1	26106-080222	BOLT, M8X 22 PLATED	1							
30-1	1	26014-080252	BOLT, M8X 25	1						S	1
	(A=EXXXXX)										
31	1	26306-100002	NUT, M10	1							
32	1	119940-77270	SPACER, GENERATOR	1						Z	
	(A=EXXXXX)										
33	1	129972-77330	ADJUSTER, BELT	1							
33-1	1	129988-77330	ADJUSTER, BELT	1						S	1
	(A=EXXXXX)										

N:Old $\frac{\text{Yes}}{\text{No}}$ New. Q:Old $\frac{\text{No}}{\text{Yes}}$ New. R:Old $\frac{\text{Yes}}{\text{Yes}}$ New. S:Old $\frac{\text{No}}{\text{No}}$ New. W:Add. Z:Discontinued. F:Interchangeable by set. K:Q'ty Change

Copyright (C) YANMAR GLOBAL CS CO., LTD. All RightsReserved.

Fig.19. ELECTRIC PARTS

(A)=4TNV98T-GGE2
(B)=
(C)=
(D)=
(E)=
(F)=

No.	Lev.	Parts No.	Description	Q'ty (A)	(B)	(C)	(D)	(E)	(F)	I	R
1	1	119946-91010	CORD, EXTENSION 2000	1							
2	1	119888-91026	HARNESS, WIRE	1							
2-1	1	119888-91027	HARNESS, WIRE A	1							N
	(A=*2009.01)										
2A	1	119946-91020	CORD, EXTENSION 2000	1							W
	(A=*2009.04)										
3	1	119888-91120	SUPPORT, PANEL	2							
4	1	119888-91202	PANEL ASSY	1							
4-1	1	119888-91312	PANEL ASSY, INSTRU.	1							N
	(A=*2016.09)										
5	2	104507-07190	LABEL, YANMAR MARK	1							
6	2	119888-91221	PANEL ASSY	1							
6-1	2	119888-91331	PANEL ASSY, INSTRU.	1							N
	(A=*2016.09)										
7	3	124732-77720	LAMP, CHARGE	3							
8	3	171010-77850	THERMOMETER, WATER	1							
9	3	128300-77920	TIMER, GLOW PLUG	1							
10	3	124559-77971	LAMP, PILOT	1							
11	3	119888-91032	HARNESS, WIRE B	1							
12	3	171080-91101	TACHOMETER	1							
12-1	3	171082-91101	TACHOMETER	1							N
	(A=*2016.09)										
13	3	119888-91110	BODY, PANEL	1							
14	3	171090-91010	GAUGE, PRESSURE	1							
14-1	3	171090-91011	GAUGE	1							N
	(A=*2011.04)										
15	3	121400-91520	RUBBER, CUSHION	4							
16	3	121400-91530	SPACER, RUBBER	4							
17	3	119888-91610	LABEL, ALARM LAMP	1							
18	3	119888-91620	LABEL, KEY SWITCH	1							
19	3	26106-060102	BOLT, M6X 10 PLATED	1							
20	3	933110-00100	SWITCH ASSY, STARTER	1							
22	4	933110-00301	KEY ASSY	1							
25	3	129211-77920	TIMER, SECTION 1	1							
26	1	119650-77910	RELAY ASSY, GLOW	1							
29	1	119643-66900	DIODE	1							
30	1	124737-91420	CABLE, TACHOMETER	1							
31	1	129211-77920	TIMER, SECTION 1	1							
32	1	128300-77920	TIMER, GLOW PLUG	1							

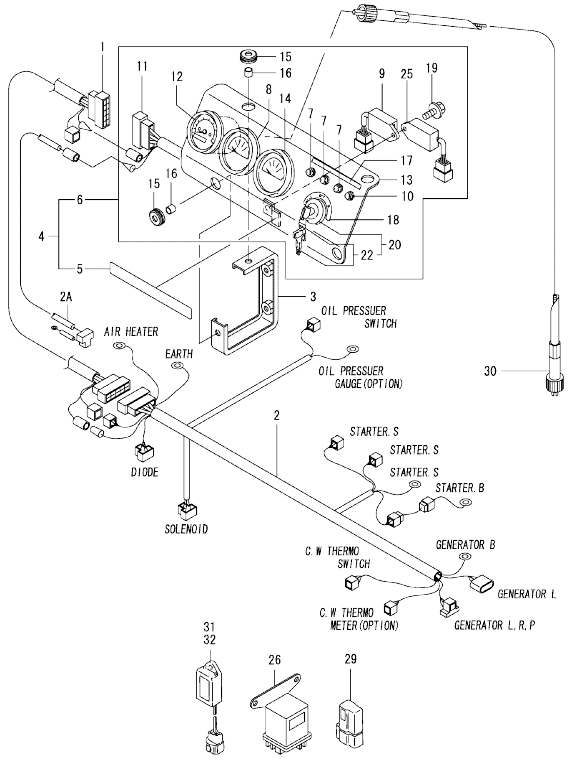

Remarks
* THIS FIGURE(ELECTRIC PARTS ASSY)IS OPTIONAL PART.

N:Old ←Yes/No→ New. Q:Old ←No/Yes→ New. R:Old ←Yes/Yes→ New. S:Old ←No/No→ New. W:Add. Z:Discontinued. F:Interchangeable by set. K:Q'ty Change

Copyright (C) YANMAR GLOBAL CS CO., LTD. All RightsReserved.

Fig.22. (19A)ACCESSORY

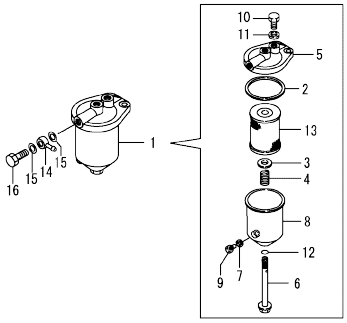

(A)=4TNV98T-GGE2
(B)=
(C)=
(D)=
(E)=
(F)=

No.	Lev.	Parts No.	Description	Q'ty (A)	(B)	(C)	(D)	(E)	(F)	I	R
1	1	129065-55750	SEPARATOR ASSY,WATER	1						W	
	(A=*2010.09)										
2	2	123325-35140	GASKET, COVER	1						W	
	(A=*2010.09)										
3	2	123325-35160	SEAT, SPRING	1						W	
	(A=*2010.09)										
4	2	129065-55170	SPRING, FILTER	1						W	
	(A=*2010.09)										
5	2	129495-55610	BODY, STRAINER	1						W	
	(A=*2010.09)										
6	2	129495-55620	BOLT, CENTER	1						W	
	(A=*2010.09)										
7	2	123672-55760	GASKET	1						W	
	(A=*2010.09)										
8	2	129065-55760	CASE, SEPARATOR	1						W	
	(A=*2010.09)										
9	2	129065-55770	PLUG, DRAIN M8	1						W	
	(A=*2010.09)										
10	2	129065-55800	PLUG, M14	1						W	
	(A=*2010.09)										
11	2	123678-55890	GASKET, PLUG	1						W	
	(A=*2010.09)										
12	2	24311-000120	O-RING, 1AP12.0	1						W	
	(A=*2010.09)										
13	2	41650-550800	ELEMENT, FUEL	1						W	
	(A=*2010.09)										
14	1	121750-59910	JOINT, BALL 14	2						W	
	(A=*2010.09)										
15	1	22190-140002	WASHER, SEAL 14	4						W	
	(A=*2010.09)										
16	1	23857-080000	BOLT, JOINT 8	2						W	
	(A=*2010.09)										

N:Old $\frac{\text{Yes}}{\text{No}}$ New. Q:Old $\frac{\text{No}}{\text{Yes}}$ New. R:Old $\frac{\text{Yes}}{\text{Yes}}$ New. S:Old $\frac{\text{No}}{\text{No}}$ New. W:Add. Z:Discontinued. F:Interchangeable by set. K:Q'ty Change

Copyright (C) YANMAR GLOBAL CS CO., LTD. All RightsReserved.

Fig.20. GASKET SET & TOOLS

(A)=4TNV98T-GGE2
(B)=
(C)=
(D)=
(E)=
(F)=

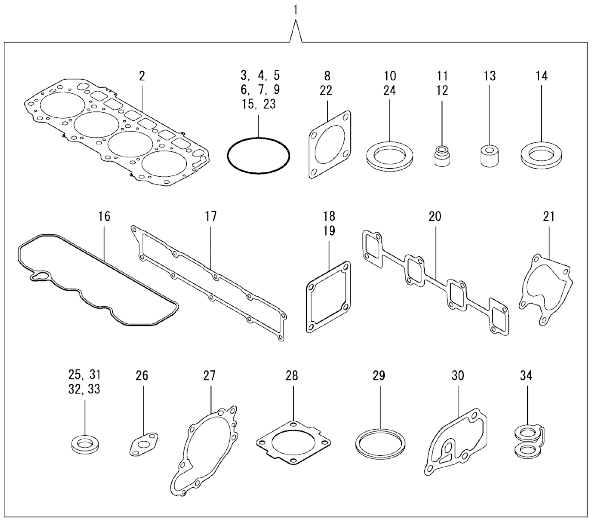

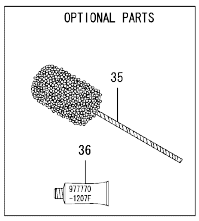

No.	Lev.	Parts No.	Description	Q'ty (A)	(B)	(C)	(D)	(E)	(F)	I	R
1	1	729908-92700	GASKET SET	1							1
2	2	129907-01331	GASKET, HEAD	1							
3	2	129900-32030	O-RING, P20	2							
4	2	129900-32040	O-RING, P14	1							
5	2	24311-000070	O-RING, 1AP7.0	1							
6	2	24351-030750	O-RING, 1A3075	1							
7	2	24311-000320	O-RING, 1AP32.0	2							
8	2	124240-01883	GASKET, PUMP	1							
9	2	24341-000240	O-RING, 1AS24.0	1							
10	2	22190-220002	WASHER, SEAL 22	1							
11	2	119803-11340	SEAL, VALVE STEM	8							
12	2	124160-11340	SEAL, VALVE STEM	8							
13	2	119802-11870	PROTECTOR, NOZZLE	4							
14	2	119625-11880	SEAT, NOZZLE	4							
15	2	24311-000120	O-RING, 1AP12.0	8							
16	2	129933-11310	GASKET, BONNET	1							
17	2	129907-12110	GASKET, MANIFOLD	1							
18	2	119129-77020	GASKET, AIR HEATER	1							
19	2	121850-77021	GASKET, AIR HEATER	1							
20	2	129900-13251	GASKET, MANIFOLD	1							
21	2	123901-18080	GASKET, TURBINE OUT	1							
22	2	129472-18090	GASKET, TURBINE IN	1							
23	2	24321-000600	O-RING, 1AG60.0	1							
24	2	22190-080002	WASHER, SEAL 8	9							
25	2	23414-100000	GASKET, 10X1.0	2							
26	2	129908-39690	GASKET, RETURN PIPE	1							
27	2	129900-42020	GASKET, WATER PUMP	1							
28	2	121850-49540	GASKET, THERMOSTAT	1							
29	2	121850-49550	GASKET, THERMOSTAT	1							
30	2	129900-49870	GASKET, THERMOSTAT	1							
31	2	23414-080000	GASKET, 8X1.0	1							
32	2	124465-44950	GASKET, 16	1							
33	2	129150-49360	GASKET, 10	1							
34	2	123907-59550	GASKET, FUEL RETURN	5							
35	1	129400-92450	HONE, FLEX	1							1
36	1	977770-1207F	GASKET, LIQUID	1							1

Remarks
(1)OPTIONAL PART.

N:Old $\frac{\text{Yes}}{\text{No}}$ New. Q:Old $\frac{\text{No}}{\text{Yes}}$ New. R:Old $\frac{\text{Yes}}{\text{Yes}}$ New. S:Old $\frac{\text{No}}{\text{No}}$ New. W:Add. Z:Discontinued. F:Interchangeable by set. K:Q'ty Change

Copyright (C) YANMAR GLOBAL CS CO., LTD. All RightsReserved.

Parts No. Index

Parts No.	Fig. No.	Ref. No.
104507-07190	19	5
105010-39140	11	7 -1
105025-59750	16	7
106500-44810	11	30
114250-39450	11	41
114250-53080	15	5
114250-53120	15	9
114250-53130	15	10
114250-53140	15	11
114250-53210	15	12
114250-53400	15	13
119000-01840	3	3
119000-39650	11	39
119005-77051	5	23
119006-03090	4	64
119100-11330	4	59
119129-77020	5	21
	20	18
119130-44760	12	17
119131-18320	8	3
119160-12530	5	10
119160-12540	5	11
119160-12570	5	8
119225-52102	16	21
119305-59120	15	27
119593-11301	4	32
119620-11180	4	16
119620-77380	18	4
119620-77421	18	8
119620-77440	18	13
119620-77461	18	15
119620-77471	18	16
119620-77490	18	20
119620-79200	18	9
119620-79210	18	10
119620-79220	18	11
119620-79230	18	12
119620-79250	18	6
119620-79260	18	18
119620-79290	18	22
119620-79300	18	23
119620-79310	18	24
119620-79320	18	25
119620-79330	18	26
119620-79340	18	27
119620-79350	18	28
119620-79360	18	7
		21
119625-11880	4	28
	20	14

Parts No.	Fig. No.	Ref. No.
119640-01640	3	7
119643-66900	19	29
119650-77910	19	26
119653-77950	14	104
119660-61901	14	60
119773-91501	11	43
119802-11870	4	27
	20	13
119802-51590	13	60
119802-51600	13	61
119802-51680	13	65
119802-51690	13	66
119803-11340	4	17
	20	11
119807-61420	14	23
119810-77340	18	29 -1
119888-91026	19	2
119888-91027	19	2 -1
119888-91032	19	11
119888-91110	19	13
119888-91120	19	3
119888-91202	19	4
119888-91221	19	6
119888-91312	19	4 -1
119888-91331	19	6 -1
119888-91610	19	17
119888-91620	19	18
119940-77270	18	32
119946-91010	19	1
119946-91020	19	2 A
120130-22301	9	20
121250-44901	12	35
121252-39150	11	6
121400-91520	19	15
121400-91530	19	16
121520-34810	10	14
121750-59890	10	11
	16	12
121750-59910	22	14
121850-21130	9	10
121850-21290	9	4
121850-21920	9	5
121850-49540	12	23
	20	28
121850-49550	12	24
	20	29
121850-49810	12	26
121850-77021	5	22
	20	19
122780-59100	15	26

Parts No.	Fig. No.	Ref. No.
123325-35140	22	2
123325-35160	22	3
123501-79240	18	5
123672-55760	22	7
123678-55890	22	11
123900-13630	6	3
123900-25060	7	9
123901-03240	4	68
123901-03280	4	75
123901-18080	6	5
	20	21
123901-39820	11	29
123907-11280	4	37
123907-11550	4	3
123907-11601	15	25
123907-11820	4	23
123907-11830	4	22
123907-39500	11	15
123907-55810	16	2
123907-59540	16	14
123907-59550	16	15
	20	34
123907-59560	16	19
123910-39850	11	27
123910-49600	10	8
123910-49610	10	10
123912-33050	10	2
123912-33100	10	3
123951-18220	5	18
124070-13300	11	24
124160-01751	2	23
	4	52
124160-11340	4	18
	20	12
124160-11360	4	61
124223-39900	11	3
124240-01871	2	25
124240-01883	2	26
	20	8
124250-49351	12	37
124411-01780	3	5
124465-44950	12	36
	20	32
124559-77971	19	10
124722-59050	12	42
		45
	16	17
124732-77720	19	7
124737-91420	19	30
124766-59050	16	5

Parts No.	Fig. No.	Ref. No.
124766-59050	16	9
126650-12680	5	12
127410-21480	9	13
128300-77920	19	9
		32
129001-91810	2	12
		13
129004-55612	16	1
129005-59830	11	7
		17
129006-44480	10	5
129052-79270	18	19
129065-55170	22	4
129065-55750	22	1
129065-55760	22	8
129065-55770	22	9
129065-55800	22	10
129100-01580	2	4
	3	1
129150-02450	7	4
129150-03100	4	66
129150-11230	4	40
		44
129150-11750	4	21
		41
		45
129150-14200	7	1
129150-25920	7	13
129150-35170	10	16
129150-49360	12	38
	20	33
129150-59131	15	30
		34
129150-91400	2	28
129155-51280	14	5
129155-61460	14	28
129198-59540	11	7 -2
129211-77920	19	25
		31
129240-79300	18	14
129242-55700	16	22
129242-55720	16	23
129242-55730	16	24
129242-55740	16	25
129242-55750	16	26
129242-55760	16	27
129242-55770	16	28
129255-61410	14	22
129400-92450	20	35
129410-03990	4	76

Parts No. Index

Parts No.	Fig. No.	Ref. No.
129418-18320	6	4
129423-77200	18	2
129423-77710	18	17
129457-59010	16	4
129466-49300	10	7
129472-18090	8	2
	20	22
129486-59551	16	16
129495-55610	22	5
129495-55620	22	6
129509-51390	13	21
129550-59120	15	31
129612-12650	5	7
129685-77640	21	28
129795-01900	18	1
129900-01200	1	27
129900-01250	1	4
129900-01740	2	5
129900-02020	1	6
129900-02341	1	33
129900-02410	1	9
129900-02931	1	24
129900-02941	1	36
129900-07900	4	1
129900-13251	6	2
	20	20
129900-14100	7	6
129900-21200	9	3
129900-21640	9	7
129900-21660	9	8 -1
129900-23001	9	22
129900-23200	9	25
129900-23601	9	26
129900-23611	9	29
129900-23911	9	28
129900-25100	7	10
129900-32030	2	10
	10	17
	20	3
129900-32040	2	11
	20	4
129900-42020	12	11
	20	27
129900-42461	12	14
129900-49870	12	31
	20	30
129900-77010	17	1
129900-77040	21	1
129900-77120	21	2
129900-77130	21	5

Parts No.	Fig. No.	Ref. No.
129900-77140	21	6
129900-77150	21	9
129900-77160	21	10
129900-77170	21	13
129900-77180	21	14
129900-77190	21	15
129900-77270	21	17
129900-77280	21	22
129900-77290	21	23
129900-77380	21	24
129900-77390	21	25
129900-77400	17	2
129900-77420	21	26
129900-77430	21	27
129900-77440	17	5
129900-77450	17	7
		9
	21	7
		12
129900-77460	17	11
129900-77480	17	8
129900-77510	17	17
129900-77520	17	20
129900-77540	17	18
129900-77550	17	19
129900-77591	17	12
129900-77610	17	23
129900-77620	17	13
129900-77640	17	15
129900-77650	17	14
129900-77700	17	16
129900-77710	17	24
129906-51580	13	58
129906-53000	15	2
129907-01190	1	29
129907-01331	1	28
	20	2
129907-01950	13	129
129907-01960	13	130
129907-03011	4	54
129907-03061	4	55
129907-03070	4	56
129907-11100	4	13
129907-11110	4	14
129907-11120	4	15
129907-11250	4	34
129907-11260	4	35
129907-11270	4	36
129907-11341	4	33
129907-11510	4	19

Parts No.	Fig. No.	Ref. No.
129907-11650	4	38
129907-11660	4	42
129907-11800	4	26
129907-11910	4	29
129907-11920	4	46
129907-11950	4	30
129907-12110	5	1
	20	17
129907-14400	7	2
129907-21660	9	8
129907-22050	9	16
129907-25900	7	16
129907-39061	11	13
129907-42000	12	1
129907-49610	12	39
129907-49620	12	43
129907-49710	12	40
129907-49720	12	44
129907-49730	12	25
129907-49750	12	41
129907-49800	12	19
129907-51560	13	54
129907-55810	16	2 -1
129907-59140	16	13
129907-59720	15	35
129908-01500	2	7
129908-03099	4	65
129908-03230	4	67
129908-03240	4	69
129908-03250	4	70
129908-11700	4	4
129908-12500	5	6
129908-14581	7	3
129908-21000	9	1
129908-22080	9	14
129908-32060	2	8
129908-33010	10	1
129908-33101	10	4
129908-39410	11	33
129908-39690	11	28
	20	26
129908-49060	10	6
129908-59810	15	37
129908-59820	15	38
129908-59830	15	39
129908-59840	15	40
129915-01610	3	2
129916-01800	2	3
129916-21610	9	9
129916-44740	12	16

Parts No.	Fig. No.	Ref. No.
129916-49530	12	22
129916-59020	13	127
129920-21580	9	11
129927-42140	2	11 A
129933-11310	4	58
	20	16
129933-11320	4	53
129935-03260	4	72
129935-03270	4	73
129935-12080	5	5
129935-12520	5	9
129935-13100	6	1
129935-18010	8	1
129935-18350	5	20
129935-39040	11	1
129935-39610	11	25
129936-51741	13	76
129937-07900	4	81
129937-61440	14	25
129944-12110	5	2
129944-12620	5	13
129946-61061	14	89
129950-59221	16	10
129953-25300	7	15
129953-34830	10	15
129953-35000	10	18
129957-59120	16	6
129960-03990	4	77
129960-21930	9	37
129960-21940	9	7 -1
129972-77330	18	33
129972-77341	18	29
129980-59510	16	11
129981-59010	16	8
129982-01710	3	6
129988-77330	18	33 -1
144626-51090	13	9
158552-51571	13	55
158552-51580	13	59
158552-51670	13	125
158552-51781	13	97
158552-52100	13	103
158552-52310	13	105
158552-52400	13	106
158552-52500	13	104
158552-61900	14	74
158553-51551	13	52
158553-51630	13	70
158553-51640	13	72
158553-51660	13	74

Parts No. Index

Parts No.	Fig. No.	Ref. No.
158553-51670	13	64
158553-51680	13	75
158557-51570	13	56
158560-51600	13	69
158560-61050	14	72
158560-61071	14	73
158560-61430	14	24
158563-51150	7	17
158563-51281	13	19
		20
158563-51330	13	30
158600-51270	13	18
158601-51550	13	53
158601-51570	13	57
158601-51650	13	73
158601-51770	13	96
158601-51790	13	98
171008-77410	21	3
171008-77420	21	4
171008-77450	17	6
	21	8
171008-77670	21	18
171008-77730	17	21
171008-77740	17	22
171008-77750	17	25
	21	29
171010-77850	19	8
171051-01921	1	5
171056-49120	10	25
171080-91101	19	12
171082-91101	19	12 -1
171090-91010	19	14
171090-91011	19	14 -1
171375-39601	11	42
22190-080002	11	8
		10
		10 -1
		18
		20
		22
	16	20
	20	24
22190-120002	13	99
		107
		108
22190-140002	22	15
22190-160002	14	79
22190-180002	13	100
		109
22190-220002	3	9

Parts No.	Fig. No.	Ref. No.
22190-220002	20	10
22217-180000	7	18
	13	110
22252-000300	9	21
22312-050140	13	111
22351-030010	11	40
22351-050010	13	112
22351-060012	1	11
22512-070140	7	7
	9	6
22857-500100	4	60
23000-022000	4	78
23000-025000	10	12
	11	31
23000-054000	5	19
23000-060000	5	14
23000-090000	5	15
23414-080000	12	32
	20	31
23414-100000	11	11
	20	25
23857-030000	11	9
		19
23857-060000	13	113
23857-080000	22	16
23875-030000	12	28
23876-020000	4	10
23876-030000	1	12
		13
		14
	4	11
23887-120002	13	101
23887-160002	14	82
24311-000070	2	14
	13	114
	20	5
24311-000120	4	31
		62
	20	15
	22	12
24311-000160	16	29
24311-000320	2	24
	4	63
	20	7
24321-000600	10	13
	20	23
24321-000750	16	30
24341-000240	2	29
	20	9
24351-030750	2	15

Parts No.	Fig. No.	Ref. No.
24351-030750	20	6
24356-010200	13	67
		115
24356-020210	13	116
24372-000150	13	68
25132-004150	12	15
26013-080222	5	16
26014-080252	18	30 -1
26106-060102	13	117
	14	64
		65
	19	19
26106-060122	12	29
26106-060142	14	83
26106-060162	2	30
	11	32
	15	41
26106-060202	12	30
26106-060252	14	84
26106-060302	12	12
26106-060352	13	118
26106-060402	14	85
26106-080122	3	10
	4	79
	10	23
	11	12
		21
		23
	12	33
26106-080142	4	80
26106-080162	2	16
		17
		27
	4	2
	7	8
	10	24
	13	131
26106-080182	15	42
26106-080202	2	18
	5	17
26106-080222	4	82
	13	132
		133
	18	30
26106-080302	12	18
	16	3
26106-080402	2	19
		20
	4	48
26106-080452	2	21

Parts No.	Fig. No.	Ref. No.
26106-080452	5	3
26106-080552	7	14
	12	13
26106-080602	4	49
		50
	12	34
26106-080702	5	24
26106-080802	5	4
26106-080902	5	25
26106-100202	13	134
26116-050102	4	71
26116-120302	17	26
	21	30
26206-100352	3	4
26216-100302	2	9
26226-080222	4	47
26306-080002	4	51
	8	4
26306-100002	2	22
	18	31
26450-100452	13	121
26756-060002	14	66
26776-180002	7	19
	13	122
27241-300000	1	10
27241-400000	4	12
27310-070001	4	24
41650-550800	22	13
729900-02801	1	30
729906-53100	15	1
729907-01530	2	1
729907-22950	9	33
729908-01560	1	1
729908-22900	9	31
729908-92700	20	1
729937-51390	13	1
933110-00100	19	20
933110-00301	19	22
977770-1207F	20	36
X2114155110	17	3
X2114255110	17	4
X2114955020	21	16
X2130631300	17	10
	21	11
X9490561001	18	3