YANMAR

PARTS CATALOG

0CW10-M15600EN

Last update Feb., 2013

PREFACE

1. This parts catalog is the 1st edition of 4TNV98T-GGEH for Himoinsa Ltd.

Pub.No. : 000Y00W1560

Published : December,2006

Directions for the Parts Catalog.

1.The parts stipulated in this Parts Catalog are not necessarily standard equipped parts.
2.Parts may change without prior notice.
3.The following is an example of the Parts Catalog format.

0CF10-G21601 29. FUEL INJECTION PUMP(W/BOOST)

(A)=4JH-DT
(B)=4JH-DTZ
(C)=4JH-DTZP
(D)=4JH-DTZA
(E)=4JH-DTZY
(F)=

① REF.	② LEV.	PARTS NO.	DESCRIPTION	Q'TY (A)	(B)	(C)	(D)	(E)	(F)	③ I	⑤ R
1	1	729595-51390	FUEL INJECTION PUMP	1	1	1	1	1			1
1-1	1	729595-51391	FUEL INJECTION PUMP	1	1	1	1	1		N	1
	(A=E00185)	(B=E00200)									
3	2	26022-060162	SCREW M 6X 16	9	9	9	9	9			
3-1 ④	2	26022-060162	SCREW M 6X 16	4	4	4	4	4		K	
	(A=E00156)	(B=E00156)	(C=E00156) (D=E00156)	(E=E00156)							
4	2	129470-51040	CAMSHAFT	1	1	1	1	1			
5	2	122710-51050	BEARING, ROLLER	2	2	2	2	2			
6	2	129470-51060	RETAINER	1	1	1	1	1			

Remarks
(1) BOOST COMPEMSATOR TYPE. OPTIONAL
PART, TO E00155,(4JH-DT, 4JH-DTZ

① Ref. No.

The Ref. No. listed may not be in accordance with the illustration Ref. No.

(Ex.) Illustration No. 1 List Ref No. 1 (Before change) → 1- 1 (After change)

For interchangeable symbols N, R and K, illustrations for new parts may be abbreviated.

② Lev. (Level)

Level indication
The numbers below indicate the level of relativity towards the main part.
1 ----- Main parts (Assembly parts)
2 ----- Sub component included in " 1 ".
3 ----- Sub component included in " 2 ".
Note) Parts that are not for sale are partially illustrated but not listed.

③ Interchangeability Mark

When a part change takes place, one of the following interchangeability symbols is indicated beside the part.

Symbol	Interchangeability	Contents note
N	Old ← Yes / No → New	New Part is interchangeable for Old Part but Old Part is not interchangeable for New Part.
Q	Old ← No / Yes → New	New Part is not interchangeable for Old Part but Old Part is interchangeable for New Part.
R	Old ← Yes / Yes → New	New/ Old Parts are both interchangeable.
S	Old ← No / No → New	New/ Old Parts are both not interchangeable.
W		Part newly added.
Z		Part discontinued.
F		Not interchangeable by a single part but interchangeable together with related parts.
K		Changes only for used parts quantities.

④ Effective Machine No.

When a part changes, the effective Machine No. will be indicated in the (A)-(F) column.

Product Symbol	Product No.	Product Symbol	Product No.
C	Clutch No. Compressor No.	F	Machine No. (Agricultural Equip.)
D	Drive No.	M	Machine No.
E	Engine No.		

Note 1) A date may follow the symbol. (Ex.) 1996.01
Note 2) " XXXXX " and " ZZZZZ " are for parts that could not be predicted or for engine models that could not be identified.
Note 3) (A=E00185) is the E (Engine Serial Number) for the column (A) model (in this case 4JH-DT) after the parts design change.

⑤ Remarks Mark

Figures or alphabets (symbols) are entered in the remarks column.
The comments (remarks) on parts that are indicated at the bottom of the illustration are the same symbols as those stated above.

Contents

0CW10-M15600

Fig. No.	Fig. Name
ENGINE SECTION (4TNV98T-GGEH)	
1.	CYLINDER BLOCK
2.	GEAR HOUSING
3.	FLYWHEEL HOUSING & OIL SUMP
4.	CYLINDER HEAD & BONNET
5.	SUCTION MANIFOLD & AIR CLEANER
6.	EXHAUST MANIFOLD
7.	CAMSHAFT & DRIVING GEAR
8.	TURBINE
9.	CRANKSHAFT & PISTON
10.	LUB.OIL SYSTEM
11.	LUB.OIL LINE
12.	COOLING WATER SYSTEM
13.	FUEL INJECTION PUMP
14.	GOVERNOR
15.	FUEL INJECTION VALVE
16.	FUEL LINE
17.	STARTING MOTOR
20.	(17A)STARTING MOTOR
18.	GENERATOR
19.	GASKET SET

Fig.1. CYLINDER BLOCK

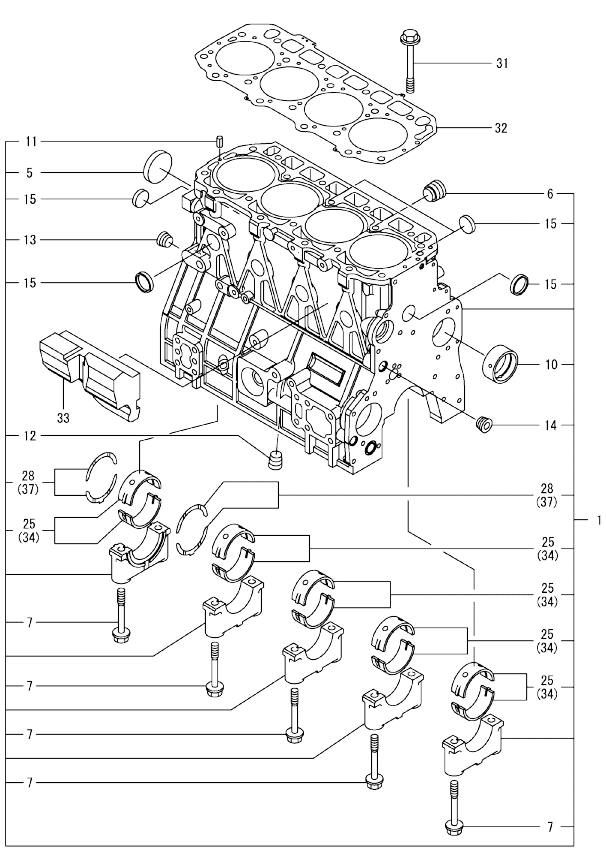

(A)=4TNV98T-GGEH
(B)=4TNV98T-GGEHR
(C)=
(D)=
(E)=
(F)=

No.	Lev.	Parts No.	Description	Q'ty (A)	(B)	(C)	(D)	(E)	(F)	I	R
1	1	729908-01560	BLOCK ASSY, CYLINDER	1	1						
5	2	129900-01250	PLUG, DISH TYPE 55	1	1						
6	2	171051-01921	PLUG, NPTF1	1	1						
7	2	129900-02020	BOLT, METAL CAP	10	10						
10	2	129900-02410	BUSH, CAMSHAFT	1	1						
11	2	22351-060012	PIN, SPRING 6.0X12	2	2						
12	2	23876-030000	PLUG, R03	1	1						
13	2	23876-030000	PLUG, R03	1	1						
14	2	23876-030000	PLUG, R03	1	1						
15	2	27241-300000	PLUG 30	8	8						
25	2	729900-02801	BEARING, MAIN	5	5						3
28	2	129900-02931	BEARING ASSY, THRUST	2	2						
31	1	129900-01200	BOLT, CYLINDER HEAD	18	18						
32	1	129907-01331	GASKET, HEAD	1	1						
33	1	129907-01190	SPACER	1	1						
34	1	129900-02341	BEARING ASSY, MAIN	5	5						1
37	1	129900-02941	BEARING, THRUST 0.25	2	2						2

Remarks
(1) UNDER-SIZE(U.S=0.25)PART.
(2) OVER-SIZE(O.S=0.25)PART.
(3) REPAIR PART.

N:Old $\frac{\text{Yes}}{\text{No}}$ New. Q:Old $\frac{\text{No}}{\text{Yes}}$ New. R:Old $\frac{\text{Yes}}{\text{Yes}}$ New. S:Old $\frac{\text{No}}{\text{No}}$ New. W:Add. Z:Discontinued. F:Interchangeable by set. K:Q'ty Change

Copyright (C) YANMAR GLOBAL CS CO., LTD. All RightsReserved.

Fig.2. GEAR HOUSING

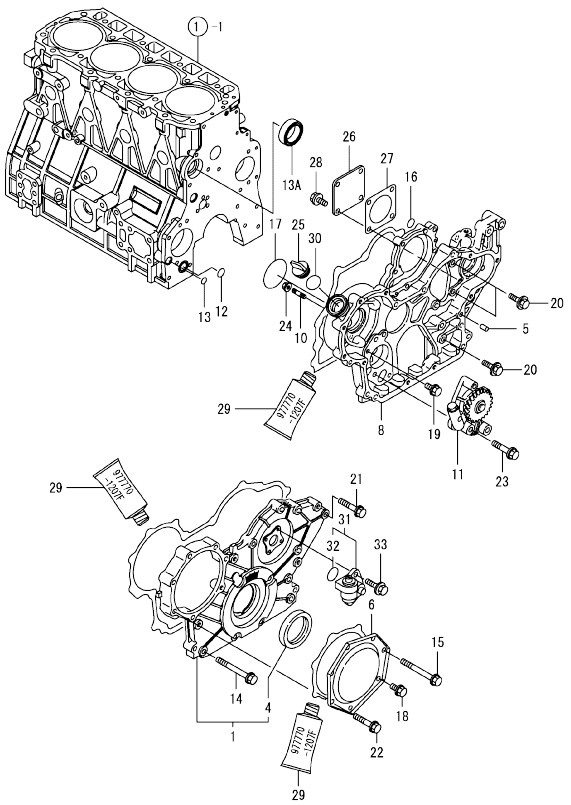

(A)=4TNV98T-GGEH
(B)=4TNV98T-GGEHR
(C)=
(D)=
(E)=
(F)=

No.	Lev.	Parts No.	Description	Q'ty (A)	(B)	(C)	(D)	(E)	(F)	I	R
1	1	729907-01580	COVER ASSY,GEAR CASE	1	1						
4	2	129900-01780	SEAL, OIL	1	1						
5	1	129100-01580	PIN, PARALLEL 8X16	4	4						
6	1	129900-01740	COVER	1	1						
8	1	129908-01500	CASE, GEAR	1	1						
10	1	26216-100302	STUD, M10X 30	4	4						
11	1	129908-32060	PUMP ASSY, OIL	1	1						
12	1	129900-32030	O-RING, P20	1	1						
13	1	129900-32040	O-RING, P14	1	1						
13A	1	129927-42140	GASKET, PUMP OUTLET	1	1					W	
	(A=ET3373)	(B=ET3508)									
14	1	129001-91810	BOLT, M8X70	6	6						
15	1	129001-91810	BOLT, M8X70	1	1						
16	1	24311-000070	O-RING, 1AP7.0	1	1						
17	1	24351-030750	O-RING, 1A3075	1	1						
18	1	26106-080162	BOLT, M8X 16 PLATED	1	1						
19	1	26106-080162	BOLT, M8X 16 PLATED	1	1						
20	1	26106-080202	BOLT, M8X 20 PLATED	3	3						
21	1	26106-080402	BOLT, M8X 40 PLATED	5	5						
22	1	26106-080402	BOLT, M8X 40 PLATED	5	5						
23	1	26106-080452	BOLT, M8X 45 PLATED	3	3						
24	1	26306-100002	NUT, M10	4	4						
25	1	124160-01751	CAP, FILLER	1	1						
26	1	124240-01871	COVER, PUMP	1	1						
27	1	124240-01883	GASKET	1	1						
28	1	26106-080162	BOLT, M8X 16 PLATED	4	4						
29	1	977770-1207F	GASKET.LIQUID	1	1						1
30	1	24311-000320	O-RING, 1AP32.0	1	1						
31	1	129150-91400	GEAR	1	1						
32	2	24341-000240	O-RING, 1AS24.0	1	1						
33	1	26106-060162	BOLT, M6X 16 PLATED	2	2						

Remarks
(1) OPTIONAL PART.

N:Old ←Yes/No→ New. Q:Old ←No/Yes→ New. R:Old ←Yes/Yes→ New. S:Old ←No/No→ New. W:Add. Z:Discontinued. F:Interchangeable by set. K:Q'ty Change

Copyright (C) YANMAR GLOBAL CS CO., LTD. All RightsReserved.

Fig.3. FLYWHEEL HOUSING & OIL SUMP

(A)=4TNV98T-GGEH
(B)=4TNV98T-GGEHR
(C)=
(D)=
(E)=
(F)=

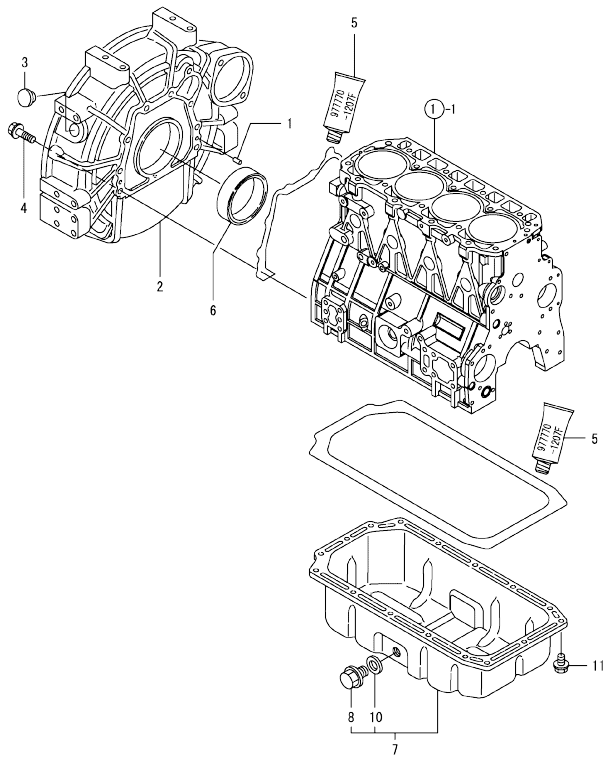

No.	Lev.	Parts No.	Description	Q'ty (A)	(B)	(C)	(D)	(E)	(F)	I	R
1	1	129100-01580	PIN, PARALLEL 8X16	2	2						
2	1	129915-01610	HOUSING, FLYWHEEL	1	1						
3	1	119000-01840	PLUG, RUBBER	1	1						
4	1	26206-100352	BOLT, M10X 35 PLATED	9	9						
5	1	977770-1207F	GASKET.LIQUID	1	1						1
6	1	124411-01780	SEAL, HTC95X115X12	1	1						
7	1	129982-01710	OIL PAN ASSY	1	1						
8	2	119640-01640	PLUG, DRAIN M22	1	1						
10	2	22190-220002	WASHER, SEAL 22	1	1						
11	1	26106-080122	BOLT, M8X 12 PLATED	16	16						

Remarks
(1) OPTIONAL PART.

N:Old ←Yes/No→ New. Q:Old ←No/Yes→ New. R:Old ←Yes/Yes→ New. S:Old ←No/No→ New. W:Add. Z:Discontinued. F:Interchangeable by set. K:Q'ty Change

Copyright (C) YANMAR GLOBAL CS CO., LTD. All RightsReserved.

Fig.4. CYLINDER HEAD & BONNET

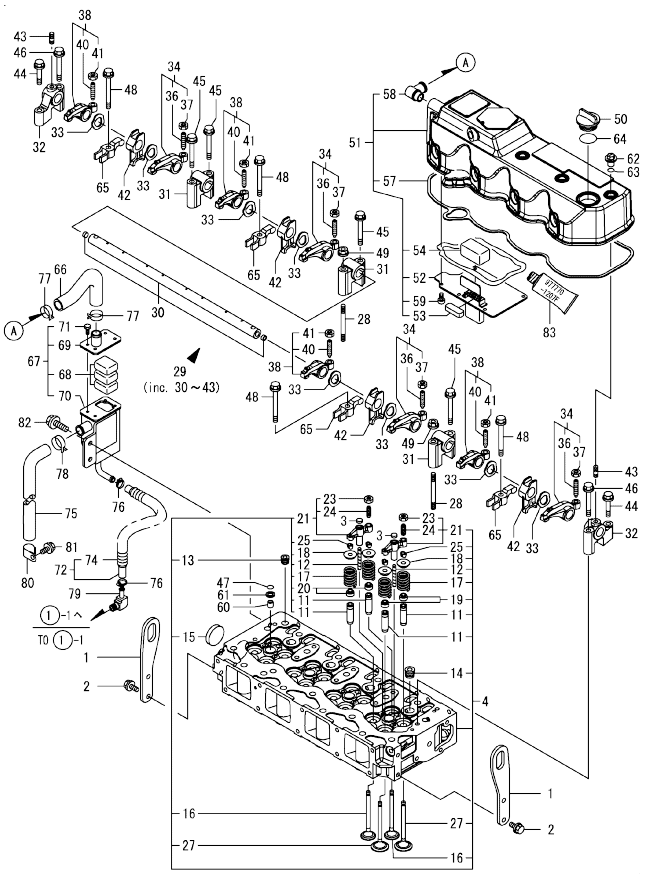

(A)=4TNV98T-GGEH
(B)=4TNV98T-GGEHR
(C)=
(D)=
(E)=
(F)=

No.	Lev.	Parts No.	Description	Q'ty (A)	(B)	(C)	(D)	(E)	(F)	I	R
1	1	129907-07900	LIFTER, ENGINE	2	2						
2	1	26106-080162	BOLT, M8X 16 PLATED	4	4						
3	1	123907-11550	SEAT, VALVE BRIDGE	8	8						
4	1	129908-11700	HEAD ASSY, CYLINDER	1	1						
11	2	129907-11800	GUIDE, VALVE	16	16						1
12	2	123907-11820	GUIDE, BRIDGE	8	8						
13	2	23876-020000	PLUG, R02	1	1						
14	2	23876-030000	PLUG, R03	4	4						
15	2	27241-400000	PLUG, 40	1	1						
16	2	129907-11110	VALVE, EXHAUST	8	8						
17	2	129907-11120	SPRING, VALVE	16	16						
18	2	119620-11180	RETAINER, SPRING	16	16						
19	2	124160-11340	SEAL, VALVE STEM	8	8						
20	2	119803-11340	SEAL, VALVE STEM	8	8						
21	2	129907-11510	BRIDGE ASSY, VALVE	8	8						
23	3	129150-11750	NUT, M8	8	8						
24	3	123907-11830	ADJUSTER	8	8						
25	2	27310-070001	COTTER, 7	16	16						
27	2	129907-11100	VALVE, SUCTION	8	8						
28	1	119593-11301	BOLT, STUD M8X80	2	2						
29	1	129907-11341	SHAFT ASSY, ROCKER	1	1						
30	2	129907-11250	SHAFT, ROCKER ARM	1	1						
31	2	129907-11260	SUPPORT, ROCKER ARM	3	3						
32	2	129907-11270	SUPPORT, ROCKER ARM	2	2						
33	2	123907-11280	WASHER	8	8						
34	2	129907-11650	ARM ASSY, ROCKER	4	4						
36	3	129150-11230	SCREW, VALVE ADJUST	4	4						
37	3	129150-11750	NUT, M8	4	4						
38	2	129907-11660	ARM ASSY, ROCKER	4	4						
40	3	129150-11230	SCREW, VALVE ADJUST	4	4						
41	3	129150-11750	NUT, M8	4	4						
42	2	129907-11920	RETAINER, NOZZLE	4	4						
43	2	26226-080222	STUD, M8X 22	2	2						
44	1	26106-080402	BOLT, M8X 40 PLATED	2	2						
45	1	26106-080602	BOLT, M8X 60 PLATED	4	4						
46	1	26106-080602	BOLT, M8X 60 PLATED	2	2						
47	1	24311-000120	O-RING, 1AP12.0	4	4						
48	1	129907-11950	BOLT, M8X75	4	4						
49	1	26306-080002	NUT, M8	2	2						
50	1	124160-01751	CAP, FILLER	1	1						
51	1	129933-11320	BONNET ASSY, HEAD	1	1						
52	2	129907-03011	PLATE, BAFFLE	1	1						
53	2	129907-03061	BAFFLE, BREATHER	1	1						
54	2	129907-03070	BAFFLE, BREATHER	1	1						
57	2	129933-11310	GASKET, BONNET	1	1						
58	2	119100-11330	ELBOW, BREATHER	1	1						
59	2	22857-500100	SCREW, 5X10	6	6						
60	1	119802-11870	PROTECTOR, NOZZLE	4	4						
61	1	119625-11880	SEAT, NOZZLE	4	4						
62	1	124160-11360	KNOB	4	4						
63	1	24311-000120	O-RING, 1AP12.0	4	4						

Remarks
(1) REPAIR PART.
(2) OPTIONAL PART.

N:Old ←Yes/No→ New. Q:Old ←No/Yes→ New. R:Old ←Yes/Yes→ New. S:Old ←No/No→ New. W:Add. Z:Discontinued. F:Interchangeable by set. K:Q'ty Change

++ CONTINUE ++

Copyright (C) YANMAR GLOBAL CS CO., LTD. All RightsReserved.

Fig.4. CYLINDER HEAD & BONNET

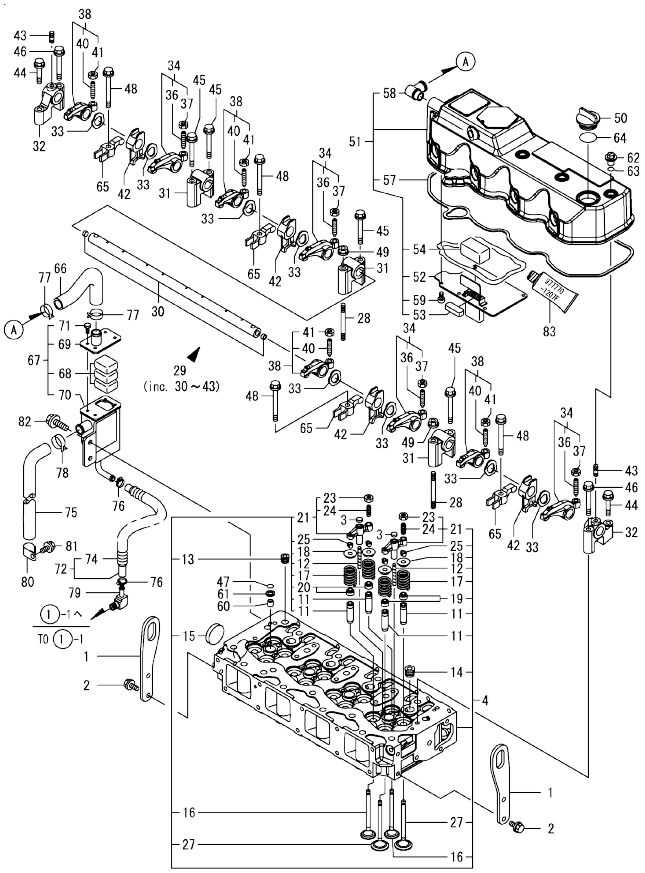

(A)=4TNV98T-GGEH
(B)=4TNV98T-GGEHR
(C)=
(D)=
(E)=
(F)=

No.	Lev.	Parts No.	Description	Q'ty (A)	(B)	(C)	(D)	(E)	(F)	I	R
64	1	24311-000320	O-RING, 1AP32.0	1	1						
65	1	129907-11910	RETAINER, NOZZLE	4	4						
66	1	129908-03099	HOSE, BREATHER	1	1						
67	1	129908-03209	BREATHER ASSY	1	1						
68	2	123901-03240	FILTER	3	3						
69	2	129908-03219	COVER, BREATHER	1	1						
70	2	129908-03229	BREATHER	1	1						
71	2	26116-050102	BOLT, M5X 10 PLATED	4	4						
72	1	129935-03260	HOSE ASSY, RETURN	1	1						
74	2	129935-03270	TUBE, CORRUGATED	1	1						
75	1	119006-03090	HOSE, BREATHER	1	1						
76	1	23000-022000	CLAMP, 22	2	2						
77	1	129410-03990	CLAMP, HOSE 21.5	2	2						
78	1	129960-03990	CLAMP, HOSE 19.8	1	1						
79	1	123901-03280	ELBOW, PT3/8-10	1	1						
80	1	129150-03100	RETAINER, PIPE	1	1						
81	1	26106-080122	BOLT, M8X 12 PLATED	1	1						
82	1	26106-080142	BOLT, M8X 14 PLATED	2	2						
83	1	977770-1207F	GASKET.LIQUID	1	1						2

Remarks
(1) REPAIR PART.
(2) OPTIONAL PART.

N:Old ←Yes/No→ New. Q:Old ←No/Yes→ New, R:Old ←Yes/Yes→ New, S:Old ←No/No→ New, W:Add, Z:Discontinued, F:Interchangeable by set, K:Q'ty Change

Copyright (C) YANMAR GLOBAL CS CO., LTD. All RightsReserved.

Fig.5. SUCTION MANIFOLD & AIR CLEANER

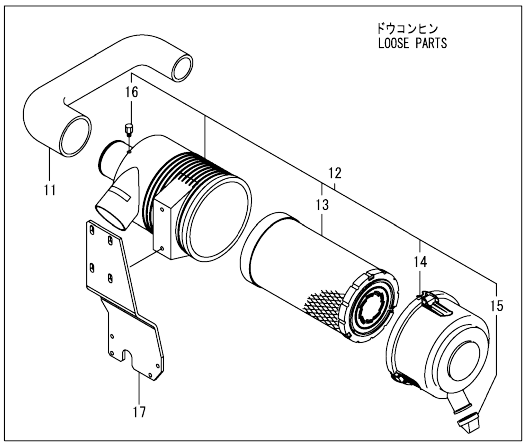

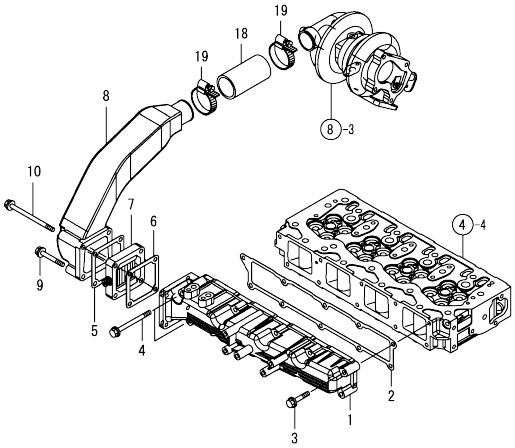

(A)=4TNV98T-GGEH
(B)=4TNV98T-GGEHR
(C)=
(D)=
(E)=
(F)=

No.	Lev.	Parts No.	Description	Q'ty (A)	(B)	(C)	(D)	(E)	(F)	I	R
1	1	129944-12110	MANIFOLD, AIR INTAKE	1	1						
2	1	129907-12110	GASKET, MANIFOLD	1	1						
3	1	26106-080452	BOLT, M8X 45 PLATED	8	8						
4	1	26106-080802	BOLT, M8X 80 PLATED	2	2						
5	1	119129-77020	GASKET	1	1						
6	1	121850-77021	GASKET, AIR HEATER	1	1						
7	1	119005-77050	HEATER, AIR	1	1						
8	1	129935-18350	DUCT, AIR	1	1						
9	1	26106-080702	BOLT, M8X 70 PLATED	2	2						
10	1	26106-080902	BOLT, M8X 90 PLATED	2	2						
11	1	129935-12070	HOSE, AIR INTAKE	1	1						
12	1	129933-12500	AIR CLEANER ASSY	1	1						
13	2	129935-12520	ELEMENT, OUTER	1	1						
14	2	119160-12530	COVER ASSY	1	1						
15	2	119160-12540	VALVE	1	1						
16	2	121820-12590	NIPPLE	1	1						
17	1	129944-12620	BRACKET, CLEANER	1	1						
18	1	123951-18220	JOINT, RUBBER	1	1						
19	1	23000-054000	CLAMP, 54	2	2						

N:Old ←Yes/No→ New. Q:Old ←No/Yes→ New. R:Old ←Yes/Yes→ New. S:Old ←No/No→ New. W:Add. Z:Discontinued. F:Interchangeable by set. K:Q'ty Change

Copyright (C) YANMAR GLOBAL CS CO., LTD. All RightsReserved.

Fig.6. EXHAUST MANIFOLD

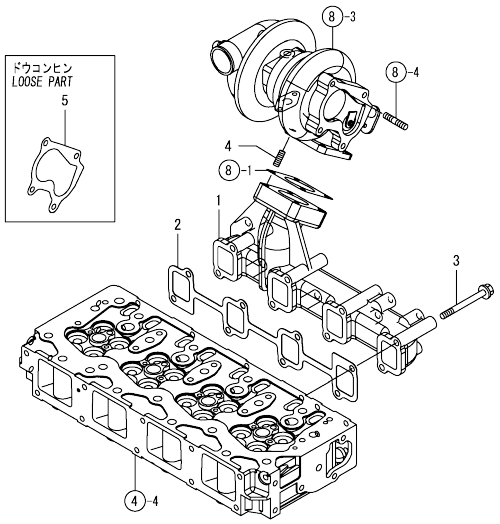

(A)=4TNV98T-GGEH
(B)=4TNV98T-GGEHR
(C)=
(D)=
(E)=
(F)=

No.	Lev.	Parts No.	Description	Q'ty (A)	(B)	(C)	(D)	(E)	(F)	I	R
1	1	129935-13100	MANIFOLD, EXHAUST	1	1						
2	1	129900-13251	GASKET, EXH.MANIFOLD	1	1						
3	1	123900-13630	BOLT, M8X80	8	8						
4	1	129418-18320	BOLT, STUD M8X20	4	4						
5	1	123901-18080	GASKET	1	1						

N:Old ←Yes/No→ New. Q:Old ←No/Yes→ New. R:Old ←Yes/Yes→ New. S:Old ←No/No→ New. W:Add. Z:Discontinued. F:Interchangeable by set. K:Q'ty Change

Copyright (C) YANMAR GLOBAL CS CO., LTD. All RightsReserved.

Fig.7. CAMSHAFT & DRIVING GEAR

(A)=4TNV98T-GGEH
(B)=4TNV98T-GGEHR
(C)=
(D)=
(E)=
(F)=

No.	Lev.	Parts No.	Description	Q'ty (A)	(B)	(C)	(D)	(E)	(F)	I	R
1	1	129150-14200	TAPPET	8	8						
2	1	129907-14400	PUSH-ROD	8	8						
3	1	129908-14581	CAMSHAFT ASSY	1	1						
4	2	129150-02450	BEARING, THRUST	1	1						
7	2	129900-14100	GEAR, CAMSHAFT	1	1						
8	2	22512-070140	KEY, 7X 14	1	1						
9	1	26106-080162	BOLT, M8X 16 PLATED	2	2						
10	1	123900-25060	SHAFT, IDLE GEAR	1	1						
11	1	129900-25100	GEAR ASSY, IDLE	1	1						
14	2	129150-25920	BUSH, IDLE GEAR	1	1						1
15	1	26106-080552	BOLT, M8X 55 PLATED	3	3						
16	1	129953-25300	BOLT	4	4						
17	1	129907-25900	GEAR, PUMP	1	1						
18	1	158563-51150	FLANGE	1	1						
19	1	22217-180000	WASHER, SPRING 18	1	1						
20	1	26776-180002	NUT, LOCK M18	1	1						

Remarks
(1) REPAIR PART.

N:Old $\frac{\text{Yes}}{\text{No}}$ New. Q:Old $\frac{\text{No}}{\text{Yes}}$ New. R:Old $\frac{\text{Yes}}{\text{Yes}}$ New. S:Old $\frac{\text{No}}{\text{No}}$ New. W:Add. Z:Discontinued. F:Interchangeable by set. K:Q'ty Change

Copyright (C) YANMAR GLOBAL CS CO., LTD. All RightsReserved.

Fig.8. TURBINE

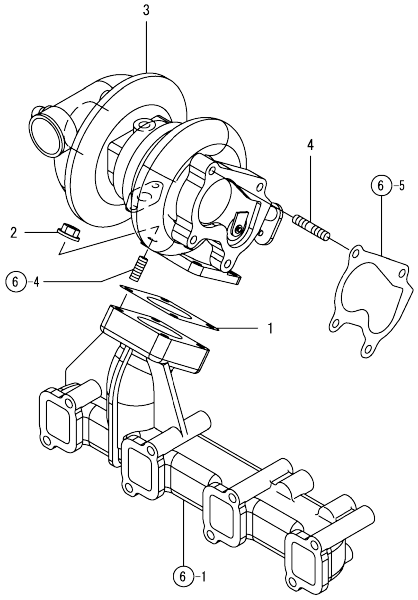

(A)=4TNV98T-GGEH
(B)=4TNV98T-GGEHR
(C)=
(D)=
(E)=
(F)=

No.	Lev.	Parts No.	Description	Q'ty (A)	(B)	(C)	(D)	(E)	(F)	I	R
1	1	129472-18090	GASKET	1	1						
2	1	26306-080002	NUT, M8	4	4						
3	1	129935-18010	TURBOCHARGER, RHF5	1	1						
4	1	119131-18320	BOLT, STUD M8X22	4	4						

N:Old ◄Yes/No► New. Q:Old ◄No/Yes► New. R:Old ◄Yes/Yes► New. S:Old ◄No/No► New. W:Add. Z:Discontinued. F:Interchangeable by set. K:Q'ty Change

Copyright (C) YANMAR GLOBAL CS CO., LTD. All RightsReserved.

Fig.9. CRANKSHAFT & PISTON

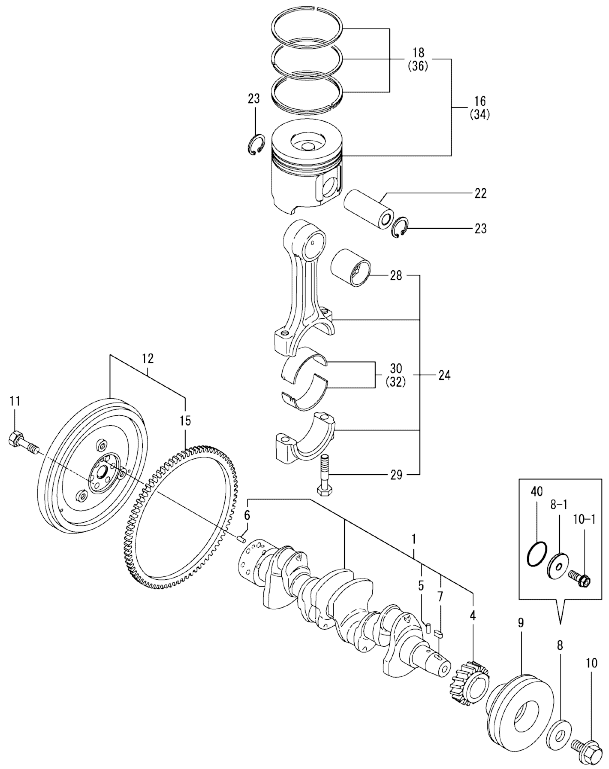

(A)=4TNV98T-GGEH (D)=
(B)=4TNV98T-GGEHR (E)=
(C)= (F)=

No.	Lev.	Parts No.	Description	Q'ty (A)	(B)	(C)	(D)	(E)	(F)	I	R
1	1	129908-21000	CRANKSHAFT ASSY	1	1						
4	2	129900-21200	GEAR, CRANKSHAFT	1	1						
5	2	121850-21290	PIN	1	1						
6	2	121850-21920	PIN, PARALLEL 10X22	1	1						
7	2	22512-070140	KEY, 7X 14	1	1						
8	1	129900-21640	WASHER	1	1						
8-1	1	129960-21940	WASHER, V-PULLEY	1	1					N	
	(A=E141477)	(B=E136131)									
9	1	129907-21660	V-PULLEY, CRANK 130	1	1						
10	1	121850-21680	BOLT	1	1						
10-1	1	129916-21610	BOLT, V-PULLEY	1	1					N	
	(A=E141477)	(B=E136131)									
11	1	121850-21130	BOLT, FLYWHEEL	6	6						
12	1	129920-21580	FLYWHEEL ASSY	1	1						
15	2	127410-21480	GEAR, RING Z=129	1	1						
16	1	129908-22080	PISTON ASSY	4	4						
18	2	129907-22050	RING SET, PISTON	4	4						
22	1	120130-22301	PIN, PISTON	4	4						
23	1	22252-000300	RING, 30	8	8						
24	1	129900-23001	ROD ASSY, CONNECTING	4	4						
28	2	129900-23911	BEARING, PISTON PIN	4	4						1
29	2	129900-23200	BOLT, CONNECTING ROD	8	8						
30	2	129900-23601	BEARING, CRANK PIN	4	4						
32	1	129900-23611	BEARING ASSY, 0.25US	4	4						2
34	1	729908-22900	PISTON ASSY, 0.25 OS	4	4						3
36	2	729907-22950	RING SET, 0.25 OS	4	4						3
40	1	129960-21930	GASKET, WASHER	1	1					W	
	(A=E141477)	(B=E136131)									

Remarks
(1) REPAIR PART.
(2) UNDER-SIZE(U.S=0.25)PART.
(3) OVER-SIZE(O.S=0.25)PART.

N:Old ←Yes/No→ New. Q:Old ←No/Yes→ New. R:Old ←Yes/Yes→ New. S:Old ←No/No→ New. W:Add. Z:Discontinued. F:Interchangeable by set. K:Q'ty Change

Copyright (C) YANMAR GLOBAL CS CO., LTD. All RightsReserved.

Fig.10. LUB.OIL SYSTEM

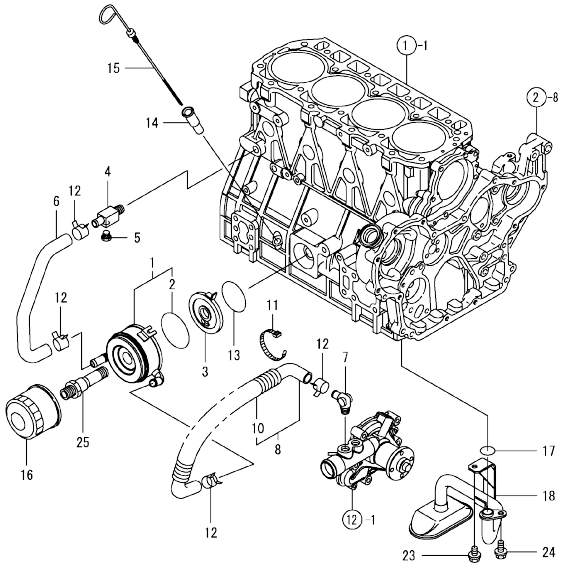

(A)=4TNV98T-GGEH
(B)=4TNV98T-GGEHR
(C)=
(D)=
(E)=
(F)=

No.	Lev.	Parts No.	Description	Q'ty (A)	(B)	(C)	(D)	(E)	(F)	I	R
1	1	129908-33010	COOLER ASSY, OIL	1	1						
2	2	123912-33050	O-RING	1	1						
3	1	129908-33101	BRACKET, OIL COOLER	1	1						
4	1	129006-44480	JOINT	1	1						
5	1	171056-49120	PLUG, DRAIN R1/4	1	1						
6	1	129908-49060	HOSE, WATER	1	1						
7	1	129466-49300	ELBOW, PT3/8	1	1						
8	1	123910-49600	HOSE ASSY, WATER	1	1						
10	2	123910-49610	TUBE, CORRUGATED	1	1						
11	1	121750-59890	BAND, NYLON	1	1						
12	1	23000-025000	CLAMP, 25	4	4						
13	1	24321-000600	O-RING, 1AG60.0	1	1						
14	1	121520-34810	GUIDE, DIPSTICK	1	1						
15	1	129953-34830	DIPSTICK	1	1						
16	1	129150-35170	FILTER,LO	1	1						
17	1	129900-32030	O-RING, P20	1	1						
18	1	129953-35000	PIPE ASSY, OIL INLET	1	1						
23	1	26106-080122	BOLT, M8X 12 PLATED	1	1						
24	1	26106-080162	BOLT, M8X 16 PLATED	1	1						
25	1	123912-33100	BOLT, COOLER	1	1						

Remarks
(1) REPAIR PART.

N:Old $\frac{\text{Yes}}{\text{No}}$ New. Q:Old $\frac{\text{No}}{\text{Yes}}$ New. R:Old $\frac{\text{Yes}}{\text{Yes}}$ New. S:Old $\frac{\text{No}}{\text{No}}$ New. W:Add. Z:Discontinued. F:Interchangeable by set. K:Q'ty Change

Copyright (C) YANMAR GLOBAL CS CO., LTD. All RightsReserved.

Fig.11. LUB.OIL LINE

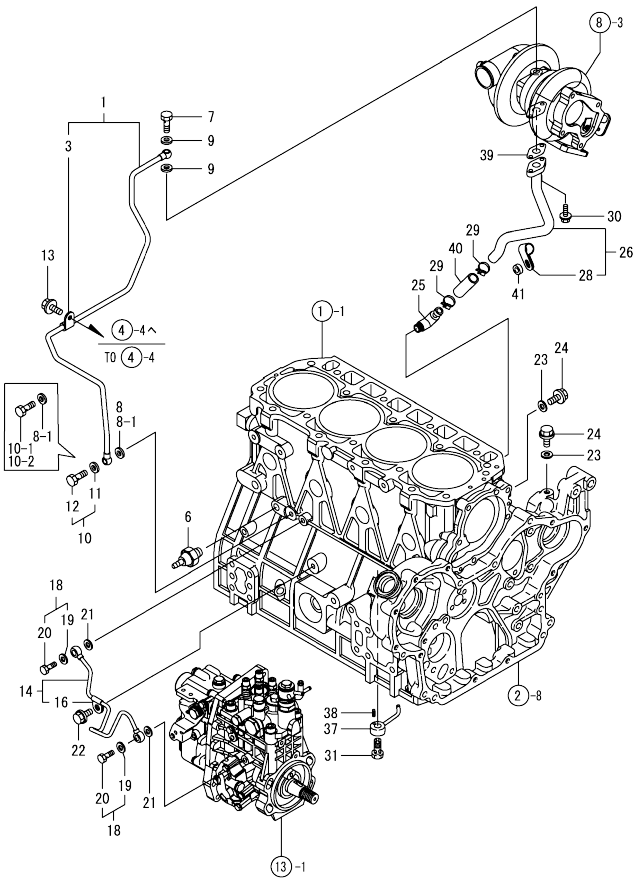

(A)=4TNV98T-GGEH
(B)=4TNV98T-GGEHR
(C)=
(D)=
(E)=
(F)=

No.	Lev.	Parts No.	Description	Q'ty (A)	(B)	(C)	(D)	(E)	(F)	I	R
1	1	129935-39040	PIPE ASSY, OIL	1	1						
3	2	124223-39900	RETAINER	1	1						
6	1	114250-39450	SWITCH, HYDRAULIC	1	1						
7	1	121252-39150	BOLT, JOINT M10X1.5	1	1						
8	1	22190-080002	WASHER, SEAL 6	1	1						
8-1	1	22190-080002	WASHER, SEAL 8	2	2					K	
	(A=EC0615)	(B=EJ2842)									
9	1	23414-100000	GASKET, 10X1.0	2	2						
10	1	129005-59830	BOLT ASSY, JOINT M8	1	1						
10-1	1	105010-39140	BOLT, PIPE JOINT M8	1	1					S	
	(A=EC0615)	(B=EJ2842)									
10-2	1	129198-59540	BOLT, PIPE JOINT M8	1	1					S	
	(A=E161222)	(B=E162681)									
11	2	22190-080002	WASHER, SEAL 6	1	1					Z	
	(A=EC0615)	(B=EJ2842)									
12	2	23857-030000	BOLT, JOINT 3	1	1					Z	
	(A=EC0615)	(B=EJ2842)									
13	1	26106-080122	BOLT, M8X 12 PLATED	1	1						
14	1	129907-39061	PIPE ASSY, OIL	1	1						
16	2	123907-39500	RETAINER, PIPE	1	1						
18	1	129005-59830	BOLT ASSY, JOINT M8	2	2						
19	2	22190-080002	WASHER, SEAL 6	2	2						
20	2	23857-030000	BOLT, JOINT 3	2	2						
21	1	22190-080002	WASHER, SEAL 6	2	2						
22	1	26106-080122	BOLT, M8X 12 PLATED	1	1						
23	1	22190-080002	WASHER, SEAL 6	2	2						
24	1	26106-080122	BOLT, M8X 12 PLATED	2	2						
25	1	124070-13300	ELBOW, PT3/8	1	1						
26	1	129935-39610	PIPE, OIL	1	1						
28	2	123910-39850	RETAINER	1	1						
29	1	23000-025000	CLAMP, 25	2	2						
30	1	26106-060162	BOLT, M6X 16 PLATED	2	2						
31	1	129908-39410	VALVE ASSY, CHECK	4	4						
37	1	119000-39650	NOZZLE, COOLING	4	4						
38	1	22351-030010	PIN, SPRING 3.0X10	4	4						
39	1	129908-39690	GASKET	1	1						
40	1	123901-39820	HOSE, LO RETURN	1	1						
41	1	106500-44810	SPACER, PULLEY	1	1						

N:Old ←Yes/No→ New. Q:Old ←No/Yes→ New. R:Old ←Yes/Yes→ New. S:Old ←No/No→ New. W:Add. Z:Discontinued. F:Interchangeable by set. K:Q'ty Change

Copyright (C) YANMAR GLOBAL CS CO., LTD. All RightsReserved.

Fig.12. COOLING WATER SYSTEM

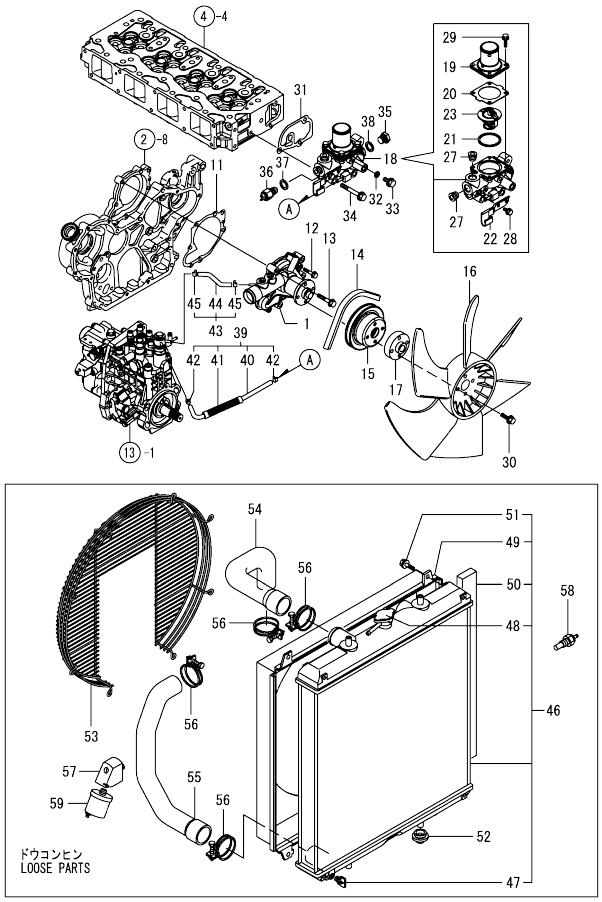

(A)=4TNV98T-GGEH
(B)=4TNV98T-GGEHR
(C)=
(D)=
(E)=
(F)=

No.	Lev.	Parts No.	Description	Q'ty (A)	(B)	(C)	(D)	(E)	(F)	I	R
1	1	129907-42000	PUMP ASSY, WATER	1	1						
11	1	129900-42020	GASKET, WATER PUMP	1	1						
12	1	26106-060302	BOLT, M6X 30 PLATED	2	2						
13	1	26106-080552	BOLT, M8X 55 PLATED	5	5						
14	1	129052-42290	V-BELT, A40.5	1	1						
15	1	129900-42461	V-PULLEY, C.W.PUMP	1	1						
16	1	129916-44740	FAN, COOLING D=430	1	1						
17	1	119130-44760	SPACER, FAN	1	1						
18	1	129907-49800	CASE ASSY,THERMOSTAT	1	1						
19	2	129916-49530	COVER, THERMOSTAT	1	1						
20	2	121850-49540	GASKET, THERMOSTAT	1	1						
21	2	121850-49550	GASKET, THERMOSTAT	1	1						
22	2	129907-49730	RETAINER, PIPE	1	1						
23	2	121850-49810	THERMOSTAT, 71C	1	1						
27	2	23875-030000	PLUG, R03	2	2						
28	2	26106-060122	BOLT, M6X 12 PLATED	1	1						
29	2	26106-060202	BOLT, M6X 20 PLATED	4	4						
30	1	26106-080302	BOLT, M8X 30 PLATED	4	4						
31	1	129900-49870	GASKET, THERMOSTAT	1	1						
32	1	23414-080000	GASKET, 8X1.0	1	1						
33	1	26106-080122	BOLT, M8X 12 PLATED	1	1						
34	1	26106-080602	BOLT, M8X 60 PLATED	3	3						
35	1	121450-42450	PLUG, M16	1	1						
36	1	121250-44901	SWITCH, THERMO 110	1	1						
37	1	124465-44950	GASKET, 16	1	1						
38	1	124465-44950	GASKET, 16	1	1						
39	1	129907-49610	HOSE ASSY, WATER	1	1						
40	2	129907-49710	HOSE, WATER	1	1						
41	2	129907-49750	TUBE, CORRUGATED	1	1						
42	2	124722-59050	CLAMP, HOSE 9	2	2						
43	1	129907-49620	HOSE ASSY, WATER	1	1						
44	2	129907-49720	HOSE, WATER	1	1						
45	2	124722-59050	CLAMP, HOSE 9	2	2						
46	1	129940-44500	RADIATOR ASSY	1	1						
47	2	129508-44550	COCK ASSY	1	1						
48	2	129107-44590	CAP, RADIATOR	1	1						
49	2	129907-44600	SHROUD	1	1						
50	2	129907-44610	GASKET	2	2						
51	2	26014-060122	BOLT, M6X 12	4	4						
52	1	119255-44660	ABSORBER	4	4						
53	1	129907-44560	GUARD, FAN	1	1						
54	1	129981-49050	HOSE, WATER	1	1						
55	1	129981-49061	PIPE, WATER	1	1						
56	1	23010-060000	CLAMP, 60	4	4						
57	1	129915-39600	DAMPER, R1/8	1	1						
58	1	124250-49351	SENSOR, WATER TEMP.	1	1						
59	1	119773-91501	SENSOR, PRESSURE	1	1						

N:Old ←Yes/No→ New. Q:Old ←No/Yes→ New. R:Old ←Yes/Yes→ New. S:Old ←No/No→ New. W:Add. Z:Discontinued. F:Interchangeable by set. K:Q'ty Change

Copyright (C) YANMAR GLOBAL CS CO., LTD. All RightsReserved.

Fig.13. FUEL INJECTION PUMP

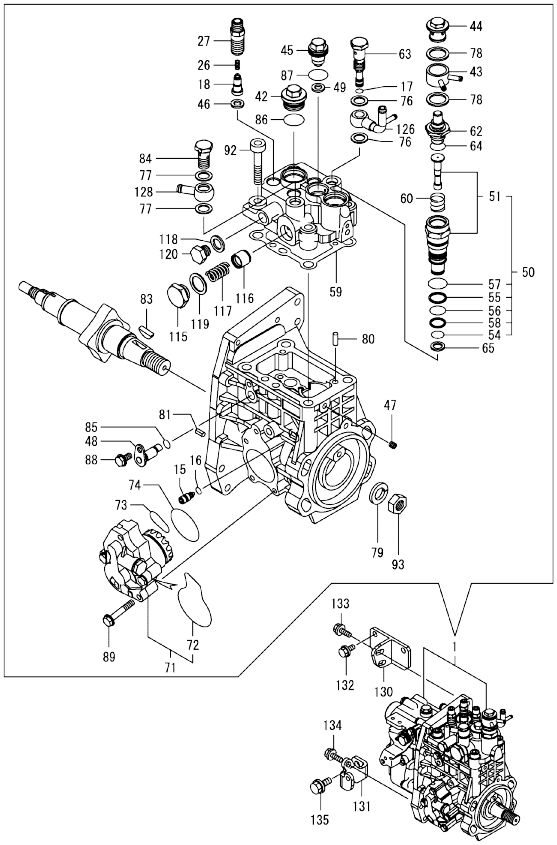

Remarks
(1) GOVERNOR ASSY(FIG.14) IS INCORPORATED IN THIS FOP.CMP (REF.NO.1).

(A)=4TNV98T-GGEH
(B)=4TNV98T-GGEHR
(C)=
(D)=
(E)=
(F)=

No.	Lev.	Parts No.	Description	Q'ty (A)	(B)	(C)	(D)	(E)	(F)	I	R
1	1	729937-51390	FIE ASSY	1	1						1
15	2	158600-51270	STOPPER, TAPPET	1	1						
16	2	158563-51281	O-RING, 4D S6	1	1						
17	2	158563-51281	O-RING, 4D S6	1	1						
18	2	158560-51300	VALVE ASSY, DELIVERY	4	4						
26	2	158563-51330	SPRING, DELIVERY	4	4						
27	2	129907-51340	HOLDER, DELIVERY	4	4						
42	2	158601-51550	PLUG, M22	1	1						
43	2	158553-51551	JOINT, COOLING WATER	1	1						
44	2	158601-51570	PLUG	1	1						
45	2	129907-51560	PLUG, M16	1	1						
46	2	158552-51570	GASKET, PLUG	4	4						
47	2	158557-51570	PLUG, RACK	1	1						
48	2	158552-51580	LIFTER, LINK	1	1						
49	2	129906-51580	GASKET, PLUG	1	1						
50	2	119802-51590	TIMER ASSY	1	1						
51	3	119802-51600	TIMER ASSY	1	1						
54	3	158553-51670	O-RING	1	1						
55	3	119802-51680	RING, BACKUP	1	1						
56	3	119802-51690	O-RING	1	1						
57	3	24356-010200	O-RING, 4D1020	1	1						
58	3	24372-000150	RING, BACK UP T2P15	1	1						
59	2	158560-51600	GASKET	1	1						
60	2	158553-51630	SPRING, TIMER	1	1						
62	2	158553-51640	THERMOELEMENT	1	1						
63	2	158601-51650	JOINT, OVER FLOW	1	1						
64	2	158553-51660	O-RING, P14	1	1						
65	2	158553-51680	GASKET, TIMER	1	1						
71	2	158552-52100	PUMP ASSY, FUEL FEED	1	1						
72	3	158552-52500	O-RING	1	1						
73	2	158552-52310	O-RING	1	1						
74	2	158552-52400	O-RING, 4E S42	1	1						
76	2	22190-120002	WASHER, SEAL 12	2	2						
77	2	22190-120002	WASHER, SEAL 12	2	2						
78	2	22190-180002	WASHER, SEAL 18	2	2						
79	2	22217-180000	WASHER, SPRING 18	1	1						
80	2	22312-050140	PIN, PARALLEL M5X14	2	2						
81	2	22351-050010	PIN, SPRING 5.0X10	2	2						
83	2	144626-51090	FEATHER KEY, 5X19	1	1						
84	2	23857-060000	BOLT, JOINT 6	1	1						
85	2	24311-000070	O-RING, 1AP7.0	1	1						
86	2	24356-010200	O-RING, 4D1020	1	1						
87	2	24356-020210	O-RING, 4D2021	1	1						
88	2	26106-060102	BOLT, M6X 10 PLATED	1	1						
89	2	26106-060352	BOLT, M6X 35 PLATED	4	4						
92	2	26450-100452	BOLT, M10X 45	4	4						
93	2	26776-180002	NUT, LOCK M18	1	1						
115	2	158601-51790	PLUG	1	1						
116	2	158601-51770	PISTON, ACCUMLATOR	1	1						
117	2	158552-51781	SPRING, ACCUMULATOR	1	1						
118	2	22190-120002	WASHER, SEAL 12	1	1						

N:Old ◄Yes/No► New. Q:Old ◄No/Yes► New. R:Old ◄Yes/Yes► New. S:Old ◄No/No► New. W:Add. Z:Discontinued. F:Interchangeable by set. K:Q'ty Change

++ CONTINUE ++

Copyright (C) YANMAR GLOBAL CS CO., LTD. All RightsReserved.

Fig.13. FUEL INJECTION PUMP

(A)=4TNV98T-GGEH
(B)=4TNV98T-GGEHR
(C)=
(D)=
(E)=
(F)=

No.	Lev.	Parts No.	Description	Q'ty (A)	(B)	(C)	(D)	(E)	(F)	I	R
119	2	22190-180002	WASHER, SEAL 18	1	1						
120	2	23887-120002	PLUG, 12	1	1						
126	2	158552-51670	JOINT, OVER FLOW	1	1						
128	2	129916-59020	JOINT, PIPE 12	1	1						
130	1	129907-01950	RETAINER, PUMP	1	1						
131	1	129907-01960	RETAINER, PUMP	1	1						
132	1	26106-080162	BOLT, M8X 16 PLATED	2	2						
133	1	26106-080222	BOLT, M8X 22 PLATED	2	2						
134	1	26106-080222	BOLT, M8X 22 PLATED	1	1						
135	1	26106-100202	BOLT, M10X 20 PLATED	1	1						

Remarks
(1) GOVERNOR ASSY(FIG.14) IS INCORPORATED IN THIS FOP.CMP (REF.NO.1).

N:Old ←Yes/No→ New. Q:Old ←No/Yes→ New. R:Old ←Yes/Yes→ New. S:Old ←No/No→ New. W:Add. Z:Discontinued. F:Interchangeable by set. K:Q'ty Change

Copyright (C) YANMAR GLOBAL CS CO., LTD. All RightsReserved.

Fig.14. GOVERNOR

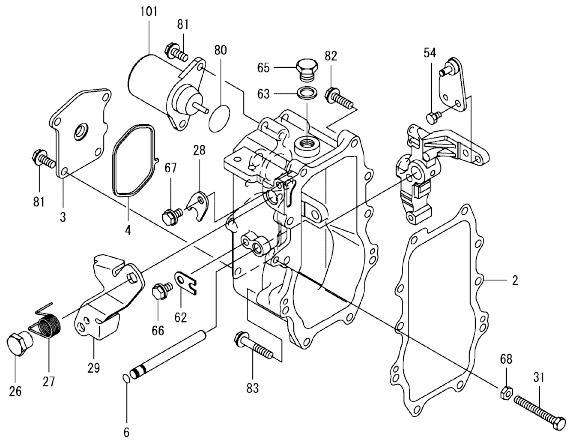

Remarks
* THIS FIGURE(GOVERNOR ASSY)IS INCORPORATED IN THE FUEL INJECTION PUMP ASSY(FIG.13).

(A)=4TNV98T-GGEH
(B)=4TNV98T-GGEHR
(C)=
(D)=
(E)=
(F)=

No.	Lev.	Parts No.	Description	Q'ty (A)	(B)	(C)	(D)	(E)	(F)	I	R
2	2	158560-61050	GASKET	1	1						
3	2	129946-61061	COVER, GOVERNOR CASE	1	1						
4	2	158560-61071	GASKET	1	1						
6	2	129155-51280	O-RING, S6	1	1						
26	2	129255-61410	NUT, M8	1	1						
27	2	119807-61420	SPRING, RETURN	1	1						
28	2	158560-61430	STOPPER, SHAFT	1	1						
29	2	129937-61440	LEVER, REGULATOR	1	1						
31	2	129155-61460	BOLT, LIMITING	1	1						
54	2	26116-060102	BOLT, M6X 10 PLATED	1	1						
62	2	119660-61901	STOPPER, SHAFT	1	1						
63	2	22190-160002	WASHER, SEAL 16	1	1						
65	2	23887-160002	PLUG, 16	1	1						
66	2	26106-060102	BOLT, M6X 10 PLATED	1	1						
67	2	26106-060102	BOLT, M6X 10 PLATED	1	1						
68	2	26756-060002	NUT, LOCK M6	1	1						
80	2	158552-61900	O-RING	1	1						
81	2	26106-060142	BOLT, M6X 14 PLATED	6	6						
82	2	26106-060252	BOLT, M6X 25 PLATED	8	8						
83	2	26106-060402	BOLT, M6X 40 PLATED	2	2						
101	2	119653-77950	SOLENOID, STOP	1	1						

N:Old ←Yes/No→ New. Q:Old ←No/Yes→ New. R:Old ←Yes/Yes→ New. S:Old ←No/No→ New. W:Add. Z:Discontinued. F:Interchangeable by set. K:Q'ty Change

Copyright (C) YANMAR GLOBAL CS CO., LTD. All RightsReserved.

Fig.15. FUEL INJECTION VALVE

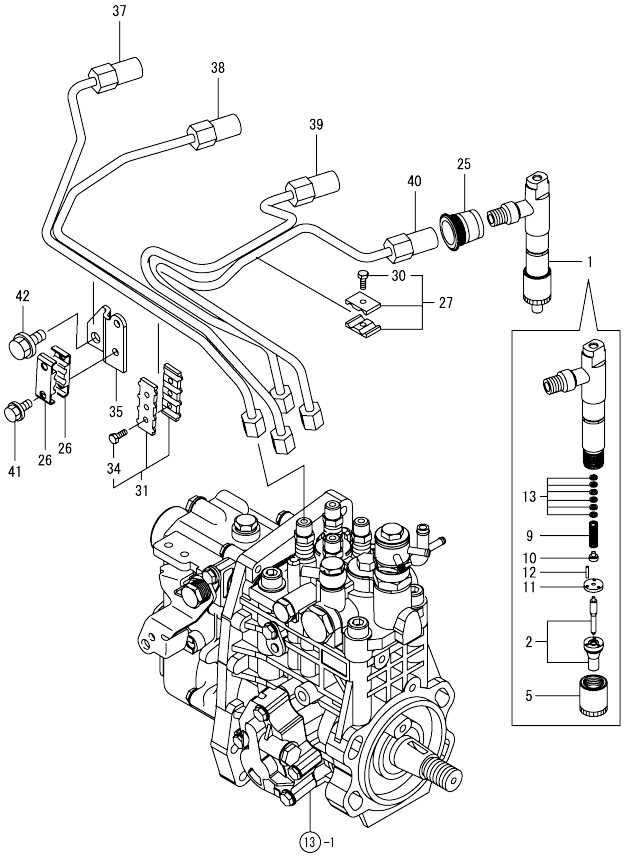

(A)=4TNV98T-GGEH
(B)=4TNV98T-GGEHR
(C)=
(D)=
(E)=
(F)=

No.	Lev.	Parts No.	Description	Q'ty (A)	(B)	(C)	(D)	(E)	(F)	I	R
1	1	729906-53100	FUEL INJECTOR ASSY	4	4						
2	2	129906-53000	NOZZLE ASSY, F.I.	4	4						
5	2	114250-53080	NUT, NOZZLE	4	4						
9	2	114250-53120	SPRING, NOZZLE	4	4						
10	2	114250-53130	SEAT, SPRING	4	4						
11	2	114250-53140	SPACER	4	4						
12	2	114250-53210	PIN	8	8						
13	2	114250-53400	SHIM SET	4	4						
25	1	123907-11601	SEAL, PIPE	4	4						
26	1	122780-59100	RETAINER	2	2						
27	1	119305-59120	RETAINER, PIPE	1	1						
30	2	129150-59131	BOLT, M4X14	1	1						
31	1	129550-59120	RETAINER, PIPE	1	1						
34	2	129150-59131	BOLT, M4X14	2	2						
35	1	129907-59710	SUPPORT	1	1						
37	1	129908-59810	PIPE ASSY, INJECTION	1	1						
38	1	129908-59820	PIPE ASSY, INJECTION	1	1						
39	1	129908-59830	PIPE ASSY, INJECTION	1	1						
40	1	129908-59840	PIPE ASSY, INJECTION	1	1						
41	1	26106-060162	BOLT, M6X 16 PLATED	2	2						
42	1	26106-080182	BOLT, M8X 18 PLATED	1	1						

N:Old ◄Yes/No► New. Q:Old ◄No/Yes► New. R:Old ◄Yes/Yes► New. S:Old ◄No/No► New. W:Add. Z:Discontinued. F:Interchangeable by set. K:Q'ty Change

Copyright (C) YANMAR GLOBAL CS CO., LTD. All RightsReserved.

Fig.16. FUEL LINE

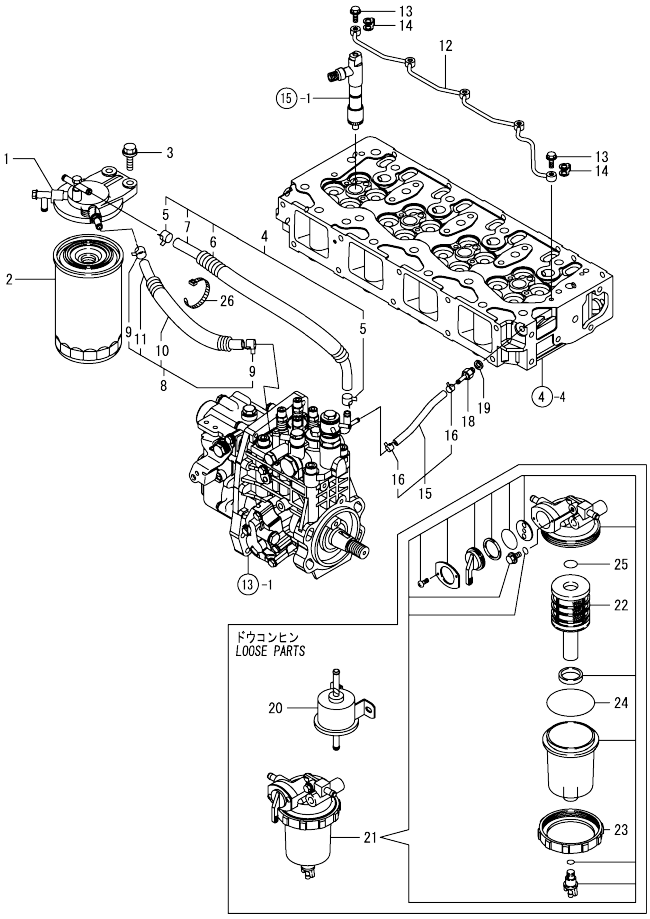

(A)=4TNV98T-GGEH
(B)=4TNV98T-GGEHR
(C)=
(D)=
(E)=
(F)=

No.	Lev.	Parts No.	Description	Q'ty (A)	(B)	(C)	(D)	(E)	(F)	I	R
1	1	129004-55612	BRACKET, FILTER	1	1						
2	1	123907-55810	FILTER, FUEL	1	1						
3	1	26106-080302	BOLT, M8X 30 PLATED	2	2						
4	1	129457-59010	HOSE ASSY, FUEL	1	1						
5	2	124766-59050	CLAMP, HOSE 11.5	2	2						
6	2	129957-59120	TUBE, CORRUGATED 15	1	1						
7	2	105025-59750	HOSE, FUEL	1	1						
8	1	129981-59010	HOSE ASSY, FUEL	1	1						
9	2	124766-59050	CLAMP, HOSE 11.5	2	2						
10	2	129950-59221	TUBE, CORRUGATED 15	1	1						
11	2	129980-59510	HOSE, FUEL	1	1						
12	1	129907-59140	PIPE ASSY, RETURN	1	1						
13	1	123907-59540	BOLT, PIPE JOINT M6	5	5						
14	1	123907-59550	GASKET	5	5						
15	1	129486-59551	HOSE ASSY, RETURN	1	1						
16	2	124722-59050	CLAMP, HOSE 9	2	2						
18	1	123907-59560	JOINT, HOSE	1	1						
19	1	22190-080002	WASHER, SEAL 6	1	1						
20	1	119225-52102	PUMP, FUEL FEED	1	1						
21	1	119802-55700	SEPARATOR ASSY,WATER	1	1						
22	2	119802-55710	ELEMENT	1	1						
23	2	129100-55690	RING, CUP RETAINING	1	1						
24	2	24321-000650	O-RING, 1AG65.0	1	1						
25	2	24311-000160	O-RING, 1AP16.0	1	1						
26	1	121750-59890	BAND, NYLON	1	1						

N:Old ←Yes/No→ New. Q:Old ←No/Yes→ New. R:Old ←Yes/Yes→ New. S:Old ←No/No→ New. W:Add. Z:Discontinued. F:Interchangeable by set. K:Q'ty Change

Copyright (C) YANMAR GLOBAL CS CO., LTD. All RightsReserved.

Fig.17. STARTING MOTOR

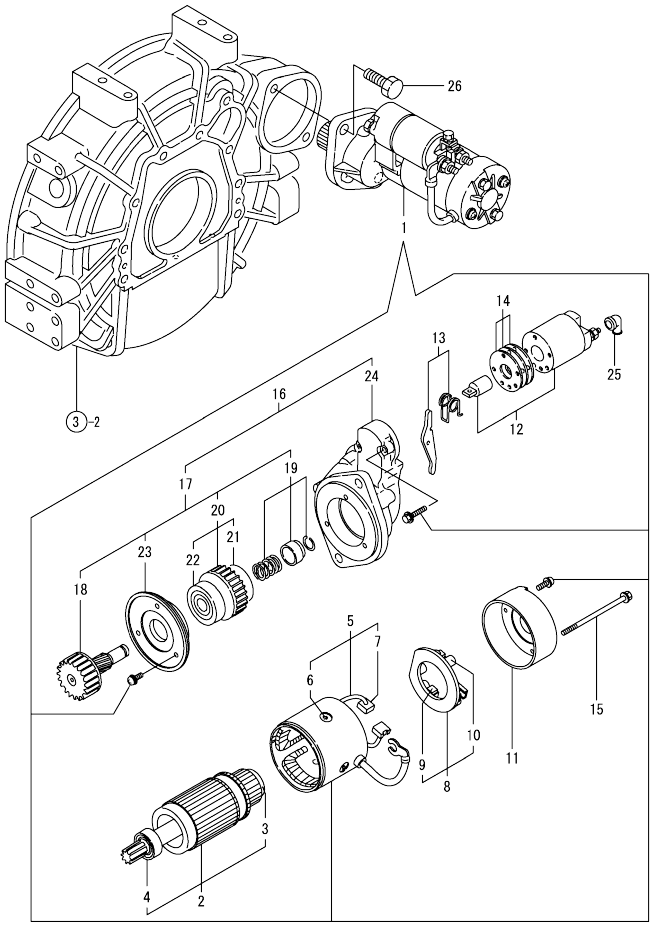

(A)=4TNV98T-GGEH
(B)=4TNV98T-GGEHR
(C)=
(D)=
(E)=
(F)=

No.	Lev.	Parts No.	Description	Q'ty (A)	(B)	(C)	(D)	(E)	(F)	I	R
1	1	129900-77010	STARTER ASSY	1	1						
2	2	129900-77400	ARMATURE ASSY	1	1						
3	3	X2114155110	BEARING, BALL	1	1						
4	3	X2114255110	BEARING, BALL	1	1						
5	2	129900-77440	COIL ASSY, FIELD	1	1						
6	3	171008-77450	SCREW, CORE SET	4	4						
7	3	129900-77450	BRUSH	2	2						
8	2	129900-77480	HOLDER ASSY, BRUSH	1	1						
9	3	129900-77450	BRUSH	2	2						
10	3	X2130631300	SPRING, BRUSH	4	4						
11	2	129900-77460	COVER	1	1						
12	2	129900-77591	SWITCH ASSY, MAGNET	1	1						
13	2	129900-77620	LEVER SET	1	1						
14	2	129900-77650	COVER KIT, DUST	1	1						
15	2	129900-77640	BOLT, THROUGH	2	2						
16	2	129900-77700	CASE ASSY, GEAR	1	1						
17	3	129900-77510	PINION ASSY,W/CLUTCH	1	1						
18	4	129900-77540	SHAFT, PINION	1	1						
19	4	129900-77550	STOPPER SET, PINION	1	1						
20	4	129900-77520	CLUTCH ASSY	1	1						
21	4	171008-77730	BEARING, BALL	1	1						
22	4	171008-77740	BEARING, BALL	1	1						
23	4	129900-77610	RETAINER, BEARING	1	1						
24	3	129900-77710	CASE, GEAR	1	1						
25	2	171008-77750	COVER, TERMINAL	1	1						
26	1	26116-120302	BOLT, M12X 30 PLATED	2	2						

N:Old ←Yes/No→ New. Q:Old ←No/Yes→ New. R:Old ←Yes/Yes→ New. S:Old ←No/No→ New. W:Add. Z:Discontinued. F:Interchangeable by set. K:Q'ty Change

Copyright (C) YANMAR GLOBAL CS CO., LTD. All RightsReserved.

Fig.20. (17A)STARTING MOTOR

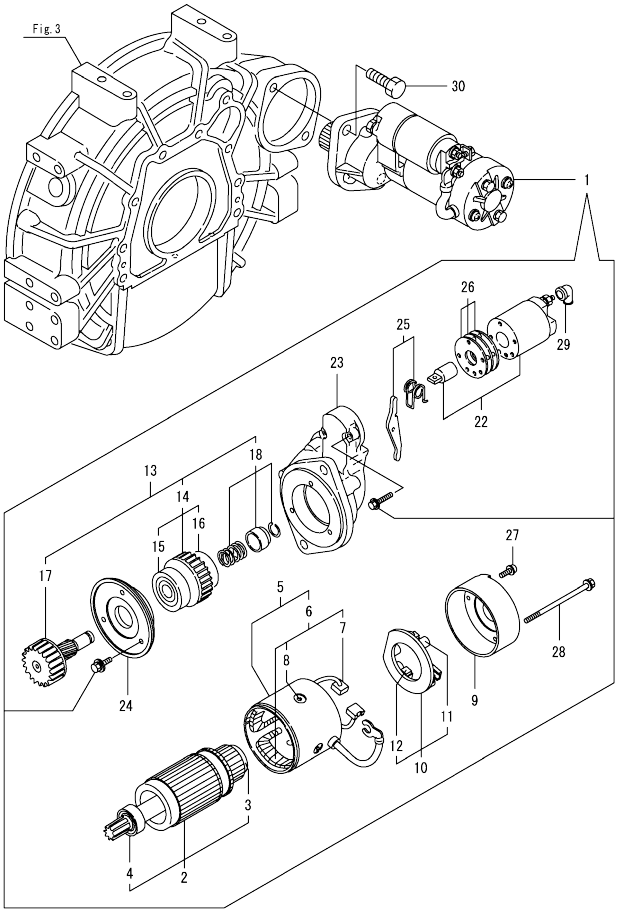

(A)=4TNV98T-GGEH
(B)=4TNV98T-GGEHR
(C)=
(D)=
(E)=
(F)=

No.	Lev.	Parts No.	Description	Q'ty (A)	(B)	(C)	(D)	(E)	(F)	I	R
1	1	129900-77040	STARTER ASSY	1	1						
2	2	129900-77120	ARMATURE ASSY	1	1						
3	3	171008-77410	BEARING, BALL	1	1						
4	3	171008-77420	BEARING, BALL	1	1						
5	2	129900-77130	YOKE ASSY	1	1						
6	3	129900-77140	COIL ASSY, FIELD	1	1						
7	4	129900-77450	BRUSH	2	2						
8	4	171008-77450	SCREW, CORE SET	4	4						
9	2	129900-77150	COVER	1	1						
10	2	129900-77160	HOLDER ASSY, BRUSH	1	1						
11	3	X2130631300	SPRING, BRUSH	4	4						
12	3	129900-77450	BRUSH	2	2						
13	2	129900-77170	CLUTCH ASSY	1	1						
14	3	129900-77180	CLUTCH ASSY	1	1						
15	4	129900-77190	BEARING, BALL	1	1						
16	4	X2114955020	BEARING, BALL	1	1						
17	3	129900-77270	SHAFT, PINION	1	1						
18	3	171008-77670	STOPPER SET, PINION	1	1						
22	2	129900-77280	SWITCH ASSY, MAGNET	1	1						
23	2	129900-77290	CASE, GEAR	1	1						
24	2	129900-77380	RETAINER, BEARING	1	1						
25	2	129900-77390	LEVER ASSY, SHIFT	1	1						
26	2	129900-77420	COVER KIT, DUST	1	1						
27	2	129900-77430	SCREW, M4X10	2	2						
28	2	129685-77640	BOLT, THROUGH	2	2						
29	2	171008-77750	COVER, TERMINAL	1	1						
30	1	26116-120302	BOLT, M12X 30 PLATED	2	2						

N:Old ←Yes/No→ New. Q:Old ←No/Yes→ New. R:Old ←Yes/Yes→ New. S:Old ←No/No→ New. W:Add. Z:Discontinued. F:Interchangeable by set. K:Q'ty Change

Copyright (C) YANMAR GLOBAL CS CO., LTD. All RightsReserved.

Fig.18. GENERATOR

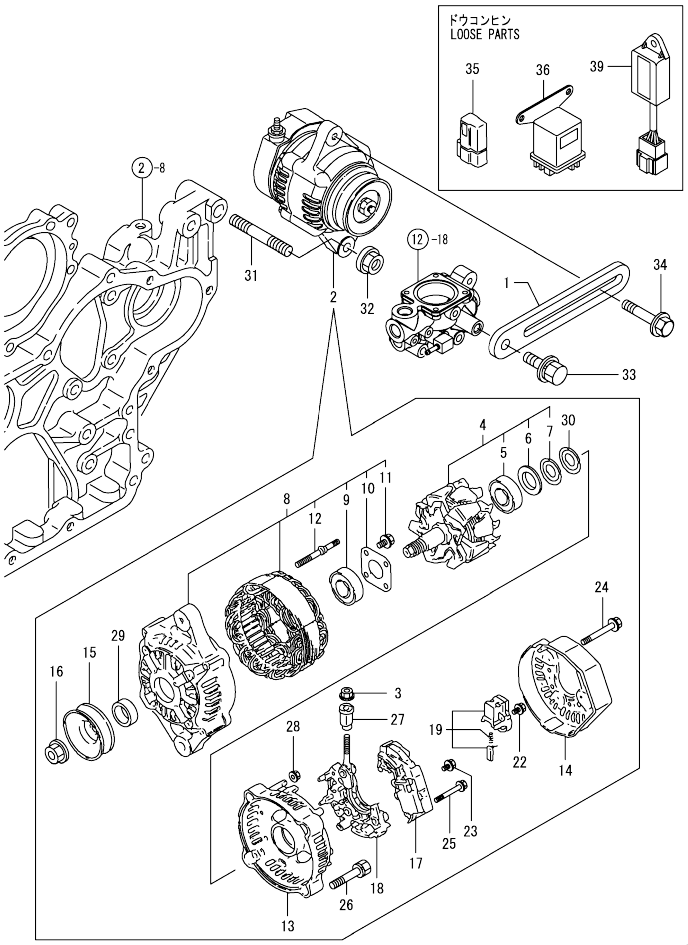

(A)=4TNV98T-GGEH
(B)=4TNV98T-GGEHR
(C)=
(D)=
(E)=
(F)=

No.	Lev.	Parts No.	Description	Q'ty (A)	(B)	(C)	(D)	(E)	(F)	I	R
1	1	129900-77330	ADJUSTER, BELT	1	1						
2	1	129423-77200	GENERATOR ASSY, 40A	1	1						
3	2	X9490561001	NUT	1	1						
4	2	119620-77380	ROTOR ASSY	1	1						
5	3	123501-79240	BEARING, BALL	1	1						
6	3	119620-79250	COVER, BEARING	1	1						
7	3	119620-79360	WASHER, THRUST	1	1						
8	2	119620-77421	FRAME ASSY,GENERATOR	1	1						
9	3	119620-79200	BEARING, BALL	1	1						
10	3	119620-79210	RETAINER	1	1						
11	3	119620-79220	SCREW	4	4						
12	3	119620-79230	BOLT, STUD	2	2						
13	2	119620-77440	FRAME ASSY	1	1						
14	2	129240-79300	COVER	1	1						
15	2	119620-77461	PULLEY, GENERATOR	1	1						
16	2	119620-77471	NUT	1	1						
17	2	129423-77710	REGULATOR ASSY	1	1						
18	2	119620-79260	HOLDER	1	1						
19	2	129052-79270	HOLDER, BRUSH	1	1						
22	2	119620-79290	SCREW	1	1						
23	2	119620-79300	SCREW	1	1						
24	2	119620-79310	BOLT	3	3						
25	2	119620-79320	SCREW	2	2						
26	2	119620-79330	BOLT	2	2						
27	2	119620-79340	BUSH, INSULATION	1	1						
28	2	119620-79350	NUT	2	2						
29	2	119620-77490	COLLAR	1	1						
30	2	119620-79360	WASHER, THRUST	1	1						
31	1	129795-01900	BOLT, STUD M10X33	1	1						
32	1	26306-100002	NUT, M10	1	1						
33	1	26014-080252	BOLT, M8X 25	1	1						
34	1	119810-77340	BOLT, ADJUST L=30	1	1						
35	1	119643-66900	DIODE	1	1						
36	1	119650-77910	RELAY ASSY, GLOW	1	1						
39	1	129211-77920	TIMER	1	1						

N:Old ←Yes/No→ New. Q:Old ←No/Yes→ New. R:Old ←Yes/Yes→ New. S:Old ←No/No→ New. W:Add. Z:Discontinued. F:Interchangeable by set. K:Q'ty Change

Copyright (C) YANMAR GLOBAL CS CO., LTD. All RightsReserved.

Fig.19. GASKET SET

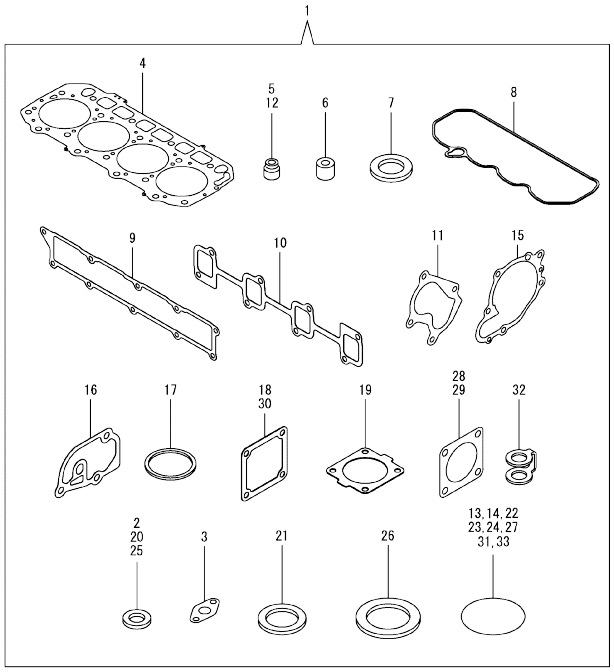

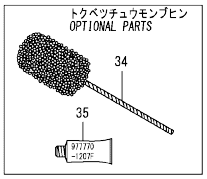

(A)=4TNV98T-GGEH
(B)=4TNV98T-GGEHR
(C)=
(D)=
(E)=
(F)=

No.	Lev.	Parts No.	Description	Q'ty (A)	(B)	(C)	(D)	(E)	(F)	I	R
1	1	729908-92630	GASKET SET	1	1						1
2	2	23414-100000	GASKET, 10X1.0	2	2						
3	2	129908-39690	GASKET	1	1						
4	2	129907-01331	GASKET, HEAD	1	1						
5	2	124160-11340	SEAL, VALVE STEM	8	8						
6	2	119802-11870	PROTECTOR, NOZZLE	4	4						
7	2	119625-11880	SEAT, NOZZLE	4	4						
8	2	129933-11310	GASKET, BONNET	1	1						
9	2	129907-12110	GASKET, MANIFOLD	1	1						
10	2	129900-13251	GASKET, EXH.MANIFOLD	1	1						
11	2	123901-18080	GASKET	1	1						
12	2	119803-11340	SEAL, VALVE STEM	8	8						
13	2	129900-32030	O-RING, P20	2	2						
14	2	129900-32040	O-RING, P14	1	1						
15	2	129900-42020	GASKET, WATER PUMP	1	1						
16	2	129900-49870	GASKET, THERMOSTAT	1	1						
17	2	121850-49550	GASKET, THERMOSTAT	1	1						
18	2	121850-77021	GASKET, AIR HEATER	1	1						
19	2	121850-49540	GASKET, THERMOSTAT	1	1						
20	2	23414-080000	GASKET, 8X1.0	1	1						
21	2	124465-44950	GASKET, 16	2	2						
22	2	24311-000070	O-RING, 1AP7.0	1	1						
23	2	24311-000120	O-RING, 1AP12.0	8	8						
24	2	24311-000320	O-RING, 1AP32.0	2	2						
25	2	22190-080002	WASHER, SEAL 6	9	9						
26	2	22190-220002	WASHER, SEAL 22	1	1						
27	2	24351-030750	O-RING, 1A3075	1	1						
28	2	129472-18090	GASKET	1	1						
29	2	124240-01883	GASKET	1	1						
30	2	119129-77020	GASKET	1	1						
31	2	24321-000600	O-RING, 1AG60.0	1	1						
32	2	123907-59550	GASKET	5	5						
33	2	24341-000240	O-RING, 1AS24.0	1	1						
34	1	129400-92450	HONE, FLEX	1	1						1
35	1	977770-1207F	GASKET.LIQUID	1	1						1

Remarks
(1) OPTIONAL PARTS.

N:Old $\xleftarrow[\text{No}]{\text{Yes}}$ New. Q:Old $\xleftarrow[\text{Yes}]{\text{No}}$ New. R:Old $\xleftarrow[\text{Yes}]{\text{Yes}}$ New. S:Old $\xleftarrow[\text{No}]{\text{No}}$ New. W:Add. Z:Discontinued. F:Interchangeable by set. K:Q'ty Change

Copyright (C) YANMAR GLOBAL CS CO., LTD. All RightsReserved.

Parts No. Index

Parts No.	Fig. No.	Ref. No.
105010-39140	11	10 -1
105025-59750	16	7
106500-44810	11	41
114250-39450	11	6
114250-53080	15	5
114250-53120	15	9
114250-53130	15	10
114250-53140	15	11
114250-53210	15	12
114250-53400	15	13
119000-01840	3	3
119000-39650	11	37
119005-77050	5	7
119006-03090	4	75
119100-11330	4	58
119129-77020	5	5
	19	30
119130-44760	12	17
119131-18320	8	4
119160-12530	5	14
119160-12540	5	15
119225-52102	16	20
119255-44660	12	52
119305-59120	15	27
119593-11301	4	28
119620-11180	4	18
119620-77380	18	4
119620-77421	18	8
119620-77440	18	13
119620-77461	18	15
119620-77471	18	16
119620-77490	18	29
119620-79200	18	9
119620-79210	18	10
119620-79220	18	11
119620-79230	18	12
119620-79250	18	6
119620-79260	18	18
119620-79290	18	22
119620-79300	18	23
119620-79310	18	24
119620-79320	18	25
119620-79330	18	26
119620-79340	18	27
119620-79350	18	28
119620-79360	18	7
		30
119625-11880	4	61
	19	7
119640-01640	3	8

Parts No.	Fig. No.	Ref. No.
119643-66900	18	35
119650-77910	18	36
119653-77950	14	101
119660-61901	14	62
119773-91501	12	59
119802-11870	4	60
	19	6
119802-51590	13	50
119802-51600	13	51
119802-51680	13	55
119802-51690	13	56
119802-55700	16	21
119802-55710	16	22
119803-11340	4	20
	19	12
119807-61420	14	27
119810-77340	18	34
120130-22301	9	22
121250-44901	12	36
121252-39150	11	7
121450-42450	12	35
121520-34810	10	14
121750-59890	10	11
	16	26
121820-12590	5	16
121850-21130	9	11
121850-21290	9	5
121850-21680	9	10
121850-21920	9	6
121850-49540	12	20
	19	19
121850-49550	12	21
	19	17
121850-49810	12	23
121850-77021	5	6
	19	18
122780-59100	15	26
123501-79240	18	5
123900-13630	6	3
123900-25060	7	10
123901-03240	4	68
123901-03280	4	79
123901-18080	6	5
	19	11
123901-39820	11	40
123907-11280	4	33
123907-11550	4	3
123907-11601	15	25
123907-11820	4	12
123907-11830	4	24

Parts No.	Fig. No.	Ref. No.
123907-39500	11	16
123907-55810	16	2
123907-59540	16	13
123907-59550	16	14
	19	32
123907-59560	16	18
123910-39850	11	28
123910-49600	10	8
123910-49610	10	10
123912-33050	10	2
123912-33100	10	25
123951-18220	5	18
124070-13300	11	25
124160-01751	2	25
	4	50
124160-11340	4	19
	19	5
124160-11360	4	62
124223-39900	11	3
124240-01871	2	26
124240-01883	2	27
	19	29
124250-49351	12	58
124411-01780	3	6
124465-44950	12	37
		38
	19	21
124722-59050	12	42
		45
	16	16
124766-59050	16	5
		9
127410-21480	9	15
129001-91810	2	14
		15
129004-55612	16	1
129005-59830	11	10
		18
129006-44480	10	4
129052-42290	12	14
129052-79270	18	19
129100-01580	2	5
	3	1
129100-55690	16	23
129107-44590	12	48
129150-02450	7	4
129150-03100	4	80
129150-11230	4	36
		40
129150-11750	4	23

Parts No.	Fig. No.	Ref. No.
129150-11750	4	37
		41
129150-14200	7	1
129150-25920	7	14
129150-35170	10	16
129150-59131	15	30
		34
129150-91400	2	31
129155-51280	14	6
129155-61460	14	31
129198-59540	11	10 -2
129211-77920	18	39
129240-79300	18	14
129255-61410	14	26
129400-92450	19	34
129410-03990	4	77
129418-18320	6	4
129423-77200	18	2
129423-77710	18	17
129457-59010	16	4
129466-49300	10	7
129472-18090	8	1
	19	28
129486-59551	16	15
129508-44550	12	47
129550-59120	15	31
129685-77640	20	28
129795-01900	18	31
129900-01200	1	31
129900-01250	1	5
129900-01740	2	6
129900-01780	2	4
129900-02020	1	7
129900-02341	1	34
129900-02410	1	10
129900-02931	1	28
129900-02941	1	37
129900-13251	6	2
	19	10
129900-14100	7	7
129900-21200	9	4
129900-21640	9	8
129900-23001	9	24
129900-23200	9	29
129900-23601	9	30
129900-23611	9	32
129900-23911	9	28
129900-25100	7	11
129900-32030	2	12
	10	17

Parts No. Index

Parts No.	Fig. No.	Ref. No.
129900-32030	19	13
129900-32040	2	13
	19	14
129900-42020	12	11
	19	15
129900-42461	12	15
129900-49870	12	31
	19	16
129900-77010	17	1
129900-77040	20	1
129900-77120	20	2
129900-77130	20	5
129900-77140	20	6
129900-77150	20	9
129900-77160	20	10
129900-77170	20	13
129900-77180	20	14
129900-77190	20	15
129900-77270	20	17
129900-77280	20	22
129900-77290	20	23
129900-77330	18	1
129900-77380	20	24
129900-77390	20	25
129900-77400	17	2
129900-77420	20	26
129900-77430	20	27
129900-77440	17	5
129900-77450	17	7
		9
	20	7
		12
129900-77460	17	11
129900-77480	17	8
129900-77510	17	17
129900-77520	17	20
129900-77540	17	18
129900-77550	17	19
129900-77591	17	12
129900-77610	17	23
129900-77620	17	13
129900-77640	17	15
129900-77650	17	14
129900-77700	17	16
129900-77710	17	24
129906-51580	13	49
129906-53000	15	2
129907-01190	1	33
129907-01331	1	32
	19	4

Parts No.	Fig. No.	Ref. No.
129907-01950	13	130
129907-01960	13	131
129907-03011	4	52
129907-03061	4	53
129907-03070	4	54
129907-07900	4	1
129907-11100	4	27
129907-11110	4	16
129907-11120	4	17
129907-11250	4	30
129907-11260	4	31
129907-11270	4	32
129907-11341	4	29
129907-11510	4	21
129907-11650	4	34
129907-11660	4	38
129907-11800	4	11
129907-11910	4	65
129907-11920	4	42
129907-11950	4	48
129907-12110	5	2
	19	9
129907-14400	7	2
129907-21660	9	9
129907-22050	9	18
129907-25900	7	17
129907-39061	11	14
129907-42000	12	1
129907-44560	12	53
129907-44600	12	49
129907-44610	12	50
129907-49610	12	39
129907-49620	12	43
129907-49710	12	40
129907-49720	12	44
129907-49730	12	22
129907-49750	12	41
129907-49800	12	18
129907-51340	13	27
129907-51560	13	45
129907-59140	16	12
129907-59710	15	35
129908-01500	2	8
129908-03099	4	66
129908-03209	4	67
129908-03219	4	69
129908-03229	4	70
129908-11700	4	4
129908-14581	7	3
129908-21000	9	1

Parts No.	Fig. No.	Ref. No.
129908-22080	9	16
129908-32060	2	11
129908-33010	10	1
129908-33101	10	3
129908-39410	11	31
129908-39690	11	39
	19	3
129908-49060	10	6
129908-59810	15	37
129908-59820	15	38
129908-59830	15	39
129908-59840	15	40
129915-01610	3	2
129915-39600	12	57
129916-21610	9	10 -1
129916-44740	12	16
129916-49530	12	19
129916-59020	13	128
129920-21580	9	12
129927-42140	2	13 A
129933-11310	4	57
	19	8
129933-11320	4	51
129933-12500	5	12
129935-03260	4	72
129935-03270	4	74
129935-12070	5	11
129935-12520	5	13
129935-13100	6	1
129935-18010	8	3
129935-18350	5	8
129935-39040	11	1
129935-39610	11	26
129937-61440	14	29
129940-44500	12	46
129944-12110	5	1
129944-12620	5	17
129946-61061	14	3
129950-59221	16	10
129953-25300	7	16
129953-34830	10	15
129953-35000	10	18
129957-59120	16	6
129960-03990	4	78
129960-21930	9	40
129960-21940	9	8 -1
129980-59510	16	11
129981-49050	12	54
129981-49061	12	55
129981-59010	16	8

Parts No.	Fig. No.	Ref. No.
129982-01710	3	7
144626-51090	13	83
158552-51570	13	46
158552-51580	13	48
158552-51670	13	126
158552-51781	13	117
158552-52100	13	71
158552-52310	13	73
158552-52400	13	74
158552-52500	13	72
158552-61900	14	80
158553-51551	13	43
158553-51630	13	60
158553-51640	13	62
158553-51660	13	64
158553-51670	13	54
158553-51680	13	65
158557-51570	13	47
158560-51300	13	18
158560-51600	13	59
158560-61050	14	2
158560-61071	14	4
158560-61430	14	28
158563-51150	7	18
158563-51281	13	16
		17
158563-51330	13	26
158600-51270	13	15
158601-51550	13	42
158601-51570	13	44
158601-51650	13	63
158601-51770	13	116
158601-51790	13	115
171008-77410	20	3
171008-77420	20	4
171008-77450	17	6
	20	8
171008-77670	20	18
171008-77730	17	21
171008-77740	17	22
171008-77750	17	25
	20	29
171051-01921	1	6
171056-49120	10	5
22190-080002	11	8
		8 -1
		11
		19
		21
		23

Parts No. Index

Parts No.	Fig. No.	Ref. No.
22190-080002	16	19
	19	25
22190-120002	13	76
		77
		118
22190-160002	14	63
22190-180002	13	78
		119
22190-220002	3	10
	19	26
22217-180000	7	19
	13	79
22252-000300	9	23
22312-050140	13	80
22351-030010	11	38
22351-050010	13	81
22351-060012	1	11
22512-070140	7	8
	9	7
22857-500100	4	59
23000-022000	4	76
23000-025000	10	12
	11	29
23000-054000	5	19
23010-060000	12	56
23414-080000	12	32
	19	20
23414-100000	11	9
	19	2
23857-030000	11	12
		20
23857-060000	13	84
23875-030000	12	27
23876-020000	4	13
23876-030000	1	12
		13
		14
	4	14
23887-120002	13	120
23887-160002	14	65
24311-000070	2	16
	13	85
	19	22
24311-000120	4	47
		63
	19	23
24311-000160	16	25
24311-000320	2	30
	4	64
	19	24

Parts No.	Fig. No.	Ref. No.
24321-000600	10	13
	19	31
24321-000650	16	24
24341-000240	2	32
	19	33
24351-030750	2	17
	19	27
24356-010200	13	57
		86
24356-020210	13	87
24372-000150	13	58
26014-060122	12	51
26014-080252	18	33
26106-060102	13	88
	14	66
		67
26106-060122	12	28
26106-060142	14	81
26106-060162	2	33
	11	30
	15	41
26106-060202	12	29
26106-060252	14	82
26106-060302	12	12
26106-060352	13	89
26106-060402	14	83
26106-080122	3	11
	4	81
	10	23
	11	13
		22
		24
	12	33
26106-080142	4	82
26106-080162	2	18
		19
		28
	4	2
	7	9
	10	24
	13	132
26106-080182	15	42
26106-080202	2	20
26106-080222	13	133
		134
26106-080302	12	30
	16	3
26106-080402	2	21
		22
	4	44

Parts No.	Fig. No.	Ref. No.
26106-080452	2	23
	5	3
26106-080552	7	15
	12	13
26106-080602	4	45
		46
	12	34
26106-080702	5	9
26106-080802	5	4
26106-080902	5	10
26106-100202	13	135
26116-050102	4	71
26116-060102	14	54
26116-120302	17	26
	20	30
26206-100352	3	4
26216-100302	2	10
26226-080222	4	43
26306-080002	4	49
	8	2
26306-100002	2	24
	18	32
26450-100452	13	92
26756-060002	14	68
26776-180002	7	20
	13	93
27241-300000	1	15
27241-400000	4	15
27310-070001	4	25
729900-02801	1	25
729906-53100	15	1
729907-01580	2	1
729907-22950	9	36
729908-01560	1	1
729908-22900	9	34
729908-92630	19	1
729937-51390	13	1
977770-1207F	2	29
	3	5
	4	83
	19	35
X2114155110	17	3
X2114255110	17	4
X2114955020	20	16
X2130631300	17	10
	20	11
X9490561001	18	3

Parts No.	Fig. No.	Ref. No.