YANMAR

# PARTS CATALOG

0CW10-M67300EN

Last update Mar., 2013

# PREFACE

1. This parts catalog is the 1st edition of 4TNV98T-GPGEC for PRAMAC.

Pub.No. : 0CW10-G67300
Published : August, 2010

2. Model name

| Engine model | Vehicle | Vehicle made by |
|---|---|---|
| 4TNV98T-GPGEC | GENERATOR | PRAMAC |

## Directions for the Parts Catalog.

**1.This Parts Catalog shows both standard and optional parts.**
**2.Parts may change without prior notice.**
**3.The following is an example of the Parts Catalog format.**

0CF10-G21601 29. FUEL INJECTION PUMP(W/BOOST)

(A)=4JH-DT
(B)=4JH-DTZ
(C)=4JH-DTZP
(D)=4JH-DTZA
(E)=4JH-DTZY
(F)=

| ① REF. | ② LEV. | PARTS NO. | DESCRIPTION | Q'TY (A) | (B) | (C) | (D) | (E) | (F) | ③ I | ⑤ R |
|---|---|---|---|---|---|---|---|---|---|---|---|
| 1 | 1 | 729595-51390 | FUEL INJECTION PUMP | 1 | 1 | 1 | 1 | 1 | | | 1 |
| 1-1 | 1 | 729595-51391 | FUEL INJECTION PUMP | 1 | 1 | 1 | 1 | 1 | | N | 1 |
| | (A=E00185) | (B=E00200) | | | | | | | | | |
| 3 | 2 | 26022-060162 | SCREW M 6X 16 | 9 | 9 | 9 | 9 | 9 | | | |
| 3-1 ④ | 2 | 26022-060162 | SCREW M 6X 16 | 4 | 4 | 4 | 4 | 4 | | K | |
| | (A=E00156) | (B=E00156) | (C=E00156) (D=E00156) | (E=E00156) | | | | | | | |
| 4 | 2 | 129470-51040 | CAMSHAFT | 1 | 1 | 1 | 1 | 1 | | | |
| 5 | 2 | 122710-51050 | BEARING, ROLLER | 2 | 2 | 2 | 2 | 2 | | | |
| 6 | 2 | 129470-51060 | RETAINER | 1 | 1 | 1 | 1 | 1 | | | |

Remarks
(1) BOOST COMPEMSATOR TYPE. OPTIONAL
PART, TO E00155,(4JH-DT, 4JH-DTZ

### ①Ref. No.

The Ref. No. listed may not be in accordance with the illustration Ref. No.

(Ex.) Illustration No. 1 — List Ref No. 1 (Before change) → 1- 1 (After change)

For interchangeable symbols N, R and K, illustrations for new parts may be abbreviated.

### ②Lev. (Level)

Level indication
The numbers below indicate the level of relativity towards the main part.
1 ----- Main parts (Assembly parts)
2 ----- Sub component included in " 1 ".
3 ----- Sub component included in " 2 ".
Note) Parts that are not for sale are partially illustrated but not listed.

### ③Interchangeability Symbol

When a part change takes place, one of the following interchangeability symbols is indicated beside the part.

| Symbol | Interchangeability | Contents note |
|---|---|---|
| N | Old ← Yes / → No New | New Part is interchangeable for Old Part but Old Part is not interchangeable for New Part. |
| Q | Old ← No / → Yes New | New Part is not interchangeable for Old Part but Old Part is interchangeable for New Part. |
| R | Old ← Yes / → Yes New | New/ Old Parts are both interchangeable. |
| S | Old ← No / → No New | New/ Old Parts are both not interchangeable. |
| W | | Part newly added. |
| Z | | Part discontinued. |
| F | | Not interchangeable by a single part but interchangeable together with related parts. |
| K | | Changes only for used parts quantities. |

### ④Effective Machine No.

When a part changes, the effective Machine No. will be indicated in the (A)-(F) column.

| Product Symbol | Product No. | Product Symbol | Product No. |
|---|---|---|---|
| C | Clutch No. Compressor No. | F | Machine No. (Agricultural Equip.) |
| D | Drive No. | M | Machine No. |
| E | Engine No. | | |

Note 1) A date may follow the symbol. (Ex.) 1996.01
Note 2) " XXXXX " and " ZZZZZ " are for parts that could not be predicted or for engine models that could not be identified.
Note 3) (A=E00185) is the E (Engine Serial Number) for the column (A) model (in this case 4JH-DT) after the parts design change.

### ⑤Remarks

Figures or alphabets (symbols) are entered in the remarks column.
The comments (remarks) on parts that are indicated at the bottom of the illustration are the same symbols as those stated above.

# Contents

0CW10-M67300


| Fig. No. | Fig. Name |
|---|---|
| 4TNV98T-GPGEC | |
| 1. | CYLINDER BLOCK |
| 2. | GEAR HOUSING |
| 3. | FLYWHEEL HOUSING & OIL SUMP |
| 4. | CYLINDER HEAD & BONNET |
| 5. | SUCTION MANIFOLD & AIR CLEANER |
| 6. | EXHAUST MANIFOLD |
| 7. | CAMSHAFT & DRIVING GEAR |
| 8. | TURBINE |
| 9. | CRANKSHAFT & PISTON |
| 10. | LUB. OIL SYSTEM |
| 11. | LUB. OIL LINE |
| 12. | COOLING WATER SYSTEM |
| 13. | FUEL INJECTION PUMP |
| 14. | GOVERNOR |
| 15. | FUEL INJECTION VALVE |
| 16. | FUEL LINE |
| 17. | STARTING MOTOR |
| 18. | GENERATOR |
| 19. | GASKET SET |

# Fig.1. CYLINDER BLOCK

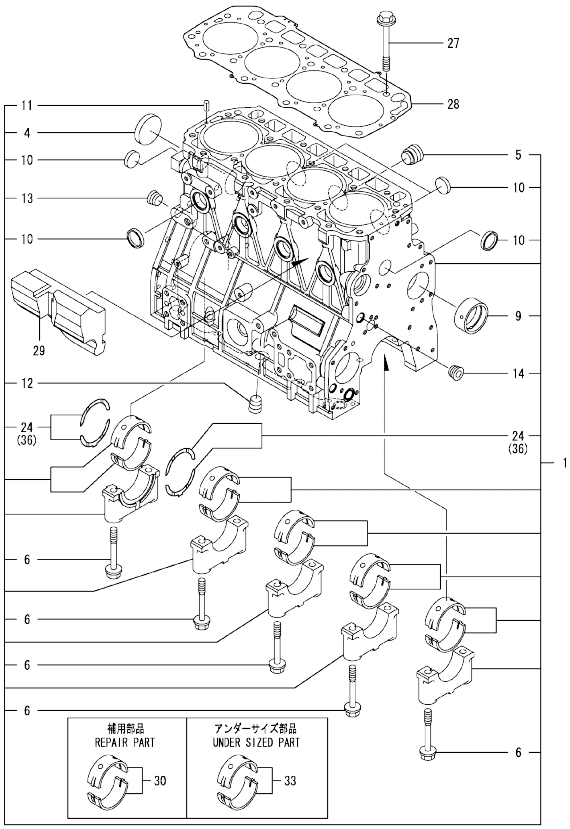


Remarks
(1) Repair part.
(2) Under-sized (U.S.=0.25) part.
(3) Over-sized (O.S.=0.25) part.



(A)=4TNV98T-GPGEC (D)=
(B)= (E)=
(C)= (F)=

| No. | Lev. | Parts No. | Description | Q'ty (A) | (B) | (C) | (D) | (E) | (F) | I | R |
|---|---|---|---|---|---|---|---|---|---|---|---|
| 1 | 1 | 729908-01560 | BLOCK ASSY, CYLINDER | 1 | | | | | | | |
| 4 | 2 | 129900-01250 | PLUG, DISH TYPE 55 | 1 | | | | | | | |
| 5 | 2 | 171051-01921 | PLUG, NPTF1 | 1 | | | | | | | |
| 6 | 2 | 129900-02020 | BOLT, METAL CAP | 10 | | | | | | | |
| 9 | 2 | 129900-02410 | BUSH, CAMSHAFT | 1 | | | | | | | |
| 10 | 2 | 27241-300000 | PLUG 30 | 8 | | | | | | | |
| 11 | 2 | 22351-060012 | PIN, SPRING 6.0X12 | 2 | | | | | | | |
| 12 | 2 | 23876-030000 | PLUG, R03 | 1 | | | | | | | |
| 13 | 2 | 23876-030000 | PLUG, R03 | 1 | | | | | | | |
| 14 | 2 | 23876-030000 | PLUG, R03 | 1 | | | | | | | |
| 24 | 2 | 129900-02931 | BEARING ASSY, THRUST | 2 | | | | | | | |
| 27 | 1 | 129900-01200 | BOLT, CYLINDER HEAD | 18 | | | | | | | |
| 28 | 1 | 129907-01331 | GASKET, HEAD | 1 | | | | | | | |
| 29 | 1 | 129907-01190 | SPACER | 1 | | | | | | | |
| 30 | 1 | 729900-02801 | BEARING, MAIN | 5 | | | | | | | 1 |
| 33 | 1 | 129900-02341 | BEARING ASSY, MAIN | 5 | | | | | | | 2 |
| 36 | 1 | 129900-02941 | BEARING, THRUST 0.25 | 2 | | | | | | | 3 |

N:Old ←Yes/No→ New. Q:Old ←No/Yes→ New. R:Old ←Yes/Yes→ New. S:Old ←No/No→ New. W:Add. Z:Discontinued. F:Interchangeable by set. K:Q'ty Change

Copyright (C) YANMAR GLOBAL CS CO., LTD. All RightsReserved.

# Fig.2. GEAR HOUSING

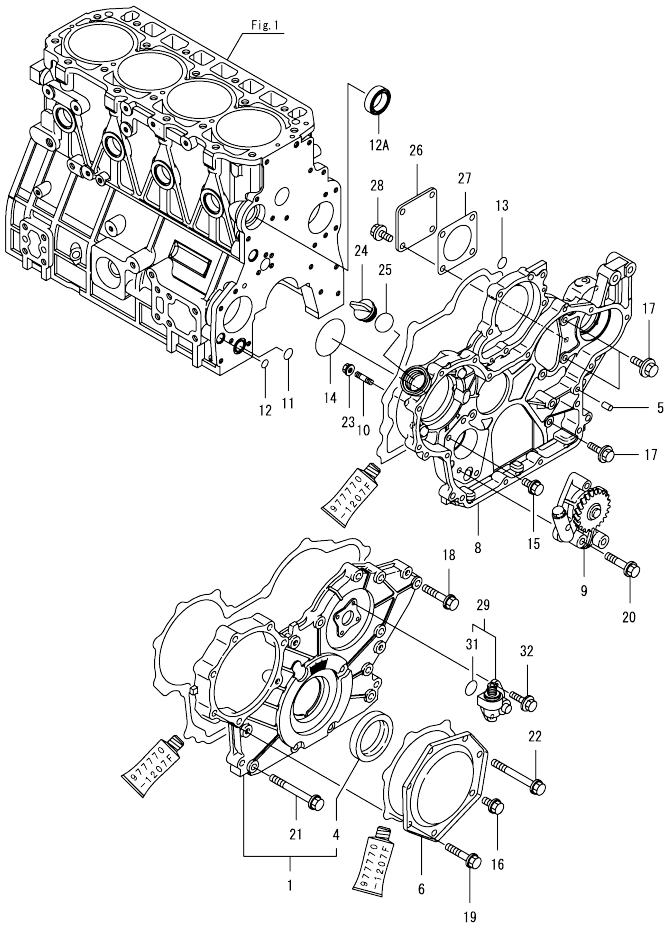




(A)=4TNV98T-GPGEC
(B)=
(C)=
(D)=
(E)=
(F)=

| No. | Lev. | Parts No. | Description | Q'ty (A) | (B) | (C) | (D) | (E) | (F) | I | R |
|---|---|---|---|---|---|---|---|---|---|---|---|
| 1 | 1 | 729907-01580 | COVER ASSY,GEAR CASE | 1 | | | | | | | |
| 4 | 2 | 129916-01800 | SEAL, OIL | 1 | | | | | | | |
| 5 | 1 | 129100-01580 | PIN, PARALLEL 8X16 | 4 | | | | | | | |
| 6 | 1 | 129951-01740 | COVER | 1 | | | | | | | |
| 8 | 1 | 129908-01500 | CASE, GEAR | 1 | | | | | | | |
| 9 | 1 | 129908-32060 | PUMP ASSY, OIL | 1 | | | | | | | |
| 10 | 1 | 26216-100302 | STUD, M10X 30 | 4 | | | | | | | |
| 11 | 1 | 129900-32030 | O-RING, P20 | 1 | | | | | | | |
| 12 | 1 | 129900-32040 | O-RING, P14 | 1 | | | | | | | |
| 12A | 1 | 129927-42140 | GASKET, PUMP OUTLET | 1 | | | | | | W | |
| | (A=EU0768) | | | | | | | | | | |
| 13 | 1 | 24311-000070 | O-RING, 1AP7.0 | 1 | | | | | | | |
| 14 | 1 | 24351-030750 | O-RING, 1A3075 | 1 | | | | | | | |
| 15 | 1 | 26106-080162 | BOLT, M8X 16 PLATED | 1 | | | | | | | |
| 16 | 1 | 26106-080202 | BOLT, M8X 20 PLATED | 1 | | | | | | | |
| 17 | 1 | 26106-080202 | BOLT, M8X 20 PLATED | 3 | | | | | | | |
| 18 | 1 | 26106-080402 | BOLT, M8X 40 PLATED | 5 | | | | | | | |
| 19 | 1 | 26106-080452 | BOLT, M8X 45 PLATED | 5 | | | | | | | |
| 20 | 1 | 26106-080452 | BOLT, M8X 45 PLATED | 3 | | | | | | | |
| 21 | 1 | 26106-080702 | BOLT, M8X 70 PLATED | 6 | | | | | | | |
| 22 | 1 | 26106-080752 | BOLT, M8X 75 PLATED | 1 | | | | | | | |
| 23 | 1 | 26306-100002 | NUT, M10 | 4 | | | | | | | |
| 24 | 1 | 124160-01751 | CAP, FILLER | 1 | | | | | | | |
| 25 | 1 | 24311-000320 | O-RING, 1AP32.0 | 1 | | | | | | | |
| 26 | 1 | 124240-01871 | COVER, PUMP | 1 | | | | | | | |
| 27 | 1 | 124240-01883 | GASKET | 1 | | | | | | | |
| 28 | 1 | 26106-080162 | BOLT, M8X 16 PLATED | 4 | | | | | | | |
| 29 | 1 | 129150-91400 | GEAR | 1 | | | | | | | |
| 31 | 2 | 24341-000240 | O-RING, 1AS24.0 | 1 | | | | | | | |
| 32 | 1 | 26106-060162 | BOLT, M6X 16 PLATED | 2 | | | | | | | |

N:Old ←Yes/No→ New. Q:Old ←No/Yes→ New. R:Old ←Yes/Yes→ New. S:Old ←No/No→ New. W:Add. Z:Discontinued. F:Interchangeable by set. K:Q'ty Change

Copyright (C) YANMAR GLOBAL CS CO., LTD. All RightsReserved.

# Fig.3. FLYWHEEL HOUSING & OIL SUMP

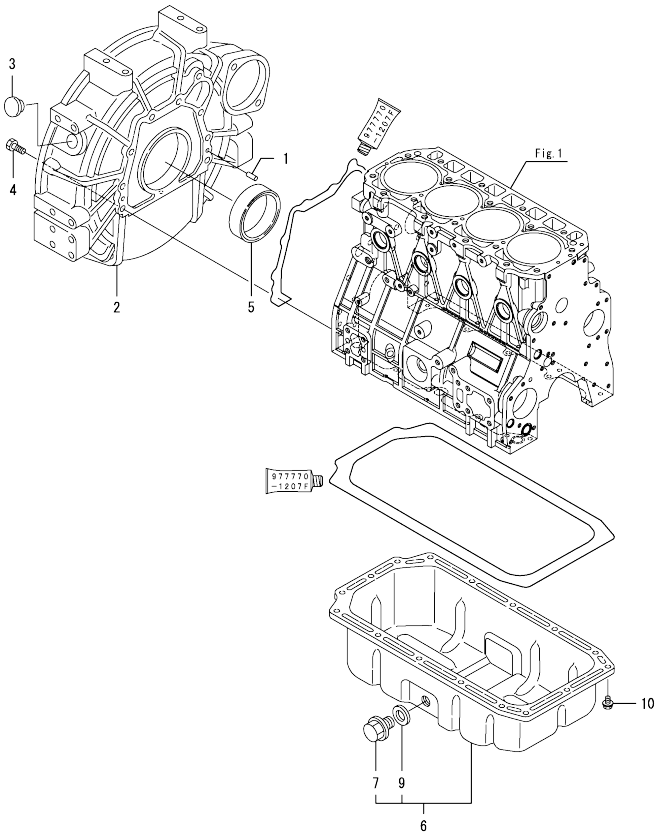




(A)=4TNV98T-GPGEC (D)=
(B)= (E)=
(C)= (F)=

| No. | Lev. | Parts No. | Description | Q'ty (A) | (B) | (C) | (D) | (E) | (F) | I | R |
|---|---|---|---|---|---|---|---|---|---|---|---|
| 1 | 1 | 129100-01580 | PIN, PARALLEL 8X16 | 2 | | | | | | | |
| 2 | 1 | 129915-01610 | HOUSING, FLYWHEEL | 1 | | | | | | | |
| 3 | 1 | 119000-01840 | PLUG, RUBBER | 1 | | | | | | | |
| 4 | 1 | 26206-100352 | BOLT, M10X 35 PLATED | 9 | | | | | | | |
| 5 | 1 | 129916-01790 | SEAL, D115/95XT11 | 1 | | | | | | | |
| 6 | 1 | 129982-01710 | OIL PAN ASSY | 1 | | | | | | | |
| 7 | 2 | 119640-01640 | PLUG, DRAIN M22 | 1 | | | | | | | |
| 9 | 2 | 22190-220002 | WASHER, SEAL 22 | 1 | | | | | | | |
| 10 | 1 | 26106-080122 | BOLT, M8X 12 PLATED | 16 | | | | | | | |

N:Old ←Yes/No→ New. Q:Old ←No/Yes→ New. R:Old ←Yes/Yes→ New. S:Old ←No/No→ New. W:Add. Z:Discontinued. F:Interchangeable by set. K:Q'ty Change

Copyright (C) YANMAR GLOBAL CS CO., LTD. All RightsReserved.

# Fig.4. CYLINDER HEAD & BONNET



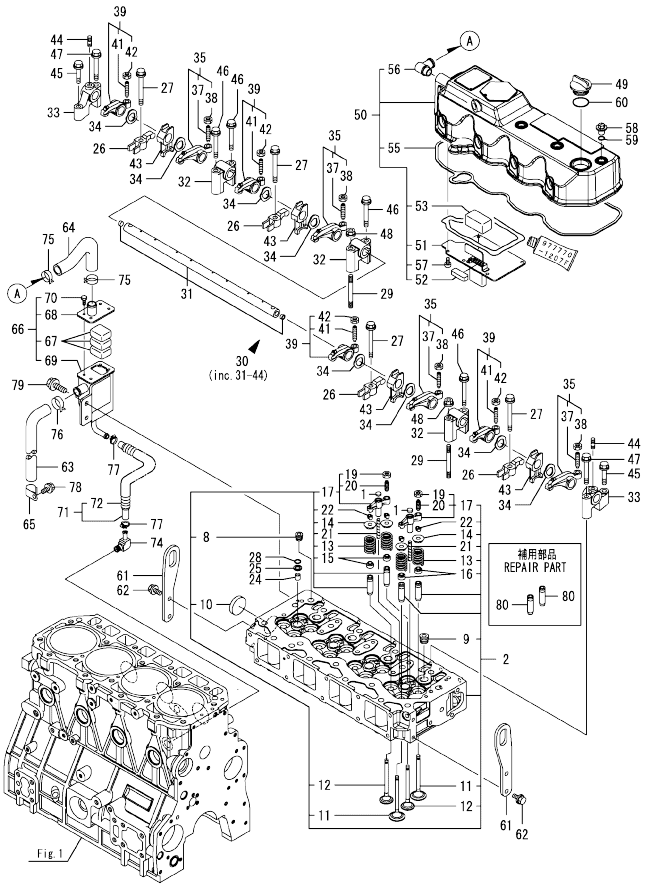


(A)=4TNV98T-GPGEC
(B)=
(C)=
(D)=
(E)=
(F)=

| No. | Lev. | Parts No. | Description | Q'ty (A) | (B) | (C) | (D) | (E) | (F) | I | R |
|---|---|---|---|---|---|---|---|---|---|---|---|
| 1 | 1 | 123907-11550 | SEAT, VALVE BRIDGE | 8 | | | | | | | |
| 2 | 1 | 129908-11700 | HEAD ASSY, CYLINDER | 1 | | | | | | | |
| 8 | 2 | 23876-020000 | PLUG, R02 | 1 | | | | | | | |
| 9 | 2 | 23876-030000 | PLUG, R03 | 4 | | | | | | | |
| 10 | 2 | 27241-400000 | PLUG, 40 | 1 | | | | | | | |
| 11 | 2 | 129907-11100 | VALVE, SUCTION | 8 | | | | | | | |
| 12 | 2 | 129907-11110 | VALVE, EXHAUST | 8 | | | | | | | |
| 13 | 2 | 129907-11120 | SPRING, VALVE | 16 | | | | | | | |
| 14 | 2 | 119620-11180 | RETAINER, SPRING | 16 | | | | | | | |
| 15 | 2 | 119803-11340 | SEAL, VALVE STEM | 8 | | | | | | | |
| 16 | 2 | 124160-11340 | SEAL, VALVE STEM | 8 | | | | | | | |
| 17 | 2 | 129907-11510 | BRIDGE ASSY, VALVE | 8 | | | | | | | |
| 19 | 3 | 129150-11750 | NUT, M8 | 8 | | | | | | | |
| 20 | 3 | 123907-11830 | ADJUSTER | 8 | | | | | | | |
| 21 | 2 | 123907-11820 | GUIDE, BRIDGE | 8 | | | | | | | |
| 22 | 2 | 27310-070001 | COTTER, 7 | 16 | | | | | | | |
| 24 | 1 | 119802-11870 | PROTECTOR, NOZZLE | 4 | | | | | | | |
| 25 | 1 | 119625-11880 | SEAT, NOZZLE | 4 | | | | | | | |
| 26 | 1 | 129907-11910 | RETAINER, NOZZLE | 4 | | | | | | | |
| 27 | 1 | 129907-11950 | BOLT, M8X75 | 4 | | | | | | | |
| 28 | 1 | 24311-000120 | O-RING, 1AP12.0 | 4 | | | | | | | |
| 29 | 1 | 119593-11301 | BOLT, STUD M8X80 | 2 | | | | | | | |
| 30 | 1 | 129907-11341 | SHAFT ASSY, ROCKER | 1 | | | | | | | |
| 31 | 2 | 129907-11250 | SHAFT, ROCKER ARM | 1 | | | | | | | |
| 32 | 2 | 129907-11260 | SUPPORT, ROCKER ARM | 3 | | | | | | | |
| 33 | 2 | 129907-11270 | SUPPORT, ROCKER ARM | 2 | | | | | | | |
| 34 | 2 | 123907-11280 | WASHER | 8 | | | | | | | |
| 35 | 2 | 129907-11650 | ARM ASSY, ROCKER | 4 | | | | | | | |
| 37 | 3 | 129150-11230 | SCREW, VALVE ADJUST | 4 | | | | | | | |
| 38 | 3 | 129150-11750 | NUT, M8 | 4 | | | | | | | |
| 39 | 2 | 129907-11660 | ARM ASSY, ROCKER | 4 | | | | | | | |
| 41 | 3 | 129150-11230 | SCREW, VALVE ADJUST | 4 | | | | | | | |
| 42 | 3 | 129150-11750 | NUT, M8 | 4 | | | | | | | |
| 43 | 2 | 129907-11920 | RETAINER, NOZZLE | 4 | | | | | | | |
| 44 | 2 | 26226-080222 | STUD, M8X 22 | 2 | | | | | | | |
| 45 | 1 | 26106-080402 | BOLT, M8X 40 PLATED | 2 | | | | | | | |
| 46 | 1 | 26106-080602 | BOLT, M8X 60 PLATED | 4 | | | | | | | |
| 47 | 1 | 26106-080602 | BOLT, M8X 60 PLATED | 2 | | | | | | | |
| 48 | 1 | 26306-080002 | NUT, M8 | 2 | | | | | | | |
| 49 | 1 | 124160-01751 | CAP, FILLER | 1 | | | | | | | |
| 50 | 1 | 129933-11320 | BONNET ASSY, HEAD | 1 | | | | | | | |
| 51 | 2 | 129907-03011 | PLATE, BAFFLE | 1 | | | | | | | |
| 52 | 2 | 129907-03061 | BAFFLE, BREATHER | 1 | | | | | | | |
| 53 | 2 | 129907-03070 | BAFFLE, BREATHER | 1 | | | | | | | |
| 55 | 2 | 129933-11310 | GASKET, BONNET | 1 | | | | | | | |
| 56 | 2 | 119100-11330 | ELBOW, BREATHER | 1 | | | | | | | |
| 57 | 2 | 22857-500100 | SCREW, 5X10 | 6 | | | | | | | |
| 58 | 1 | 124160-11360 | KNOB | 4 | | | | | | | |
| 59 | 1 | 24311-000120 | O-RING, 1AP12.0 | 4 | | | | | | | |
| 60 | 1 | 24311-000320 | O-RING, 1AP32.0 | 1 | | | | | | | |
| 61 | 1 | 129907-07900 | LIFTER, ENGINE | 2 | | | | | | | |

Remarks
(1) Repair part.

N:Old ←Yes/No→ New. Q:Old ←No/Yes→ New. R:Old ←Yes/Yes→ New. S:Old ←No/No→ New. W:Add. Z:Discontinued. F:Interchangeable by set. K:Q'ty Change

++ CONTINUE ++

Copyright (C) YANMAR GLOBAL CS CO., LTD. All RightsReserved.

# Fig.4. CYLINDER HEAD & BONNET



(A)=4TNV98T-GPGEC
(B)=
(C)=
(D)=
(E)=
(F)=

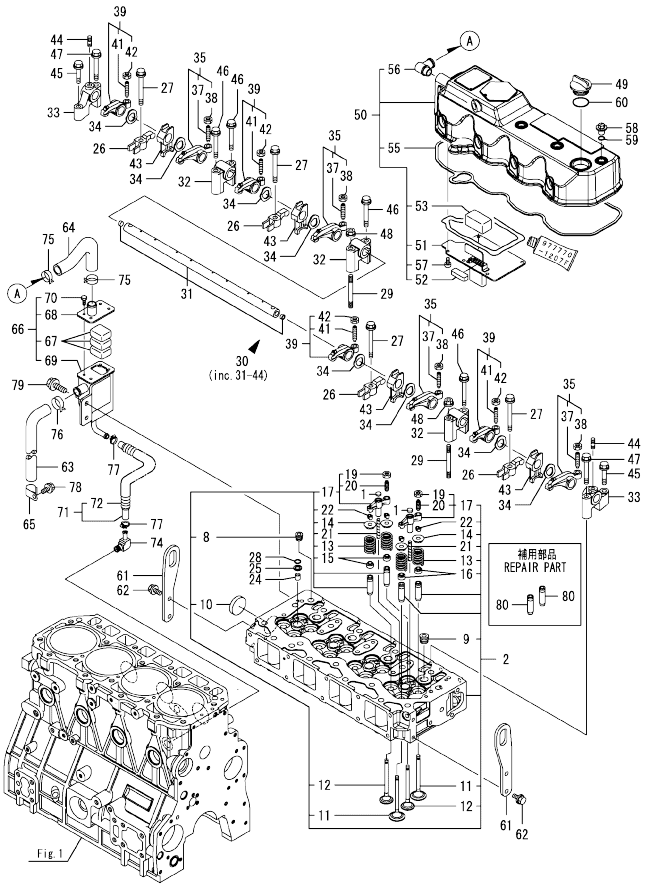


| No. | Lev. | Parts No. | Description | Q'ty (A) | (B) | (C) | (D) | (E) | (F) | I | R |
|---|---|---|---|---|---|---|---|---|---|---|---|
| 62 | 1 | 26106-080162 | BOLT, M8X 16 PLATED | 4 | | | | | | | |
| 63 | 1 | 119006-03090 | HOSE, BREATHER | 1 | | | | | | | |
| 64 | 1 | 129908-03099 | HOSE, BREATHER | 1 | | | | | | | |
| 65 | 1 | 129150-03100 | RETAINER, PIPE | 1 | | | | | | | |
| 66 | 1 | 129908-03230 | BREATHER ASSY | 1 | | | | | | | |
| 67 | 2 | 123901-03240 | FILTER | 3 | | | | | | | |
| 68 | 2 | 129908-03240 | COVER, BREATHER | 1 | | | | | | | |
| 69 | 2 | 129908-03250 | BREATHER | 1 | | | | | | | |
| 70 | 2 | 26116-050102 | BOLT, M5X 10 PLATED | 4 | | | | | | | |
| 71 | 1 | 129935-03260 | HOSE ASSY, RETURN | 1 | | | | | | | |
| 72 | 2 | 129935-03270 | TUBE, CORRUGATED | 1 | | | | | | | |
| 74 | 1 | 123901-03280 | ELBOW, PT3/8-10 | 1 | | | | | | | |
| 75 | 1 | 129410-03990 | CLAMP, HOSE 21.5 | 2 | | | | | | | |
| 76 | 1 | 129960-03990 | CLAMP, HOSE 19.8 | 1 | | | | | | | |
| 77 | 1 | 23000-022000 | CLAMP, 22 | 2 | | | | | | | |
| 78 | 1 | 26106-080122 | BOLT, M8X 12 PLATED | 1 | | | | | | | |
| 79 | 1 | 26106-080142 | BOLT, M8X 14 PLATED | 2 | | | | | | | |
| 80 | 1 | 129907-11800 | GUIDE, VALVE | 16 | | | | | | | 1 |

Remarks
(1) Repair part.

N:Old ←Yes/No→ New. Q:Old ←No/Yes→ New. R:Old ←Yes/Yes→ New. S:Old ←No/No→ New. W:Add. Z:Discontinued. F:Interchangeable by set. K:Q'ty Change

Copyright (C) YANMAR GLOBAL CS CO., LTD. All RightsReserved.

# Fig.5. SUCTION MANIFOLD & AIR CLEANER



(A)=4TNV98T-GPGEC
(B)=
(C)=
(D)=
(E)=
(F)=

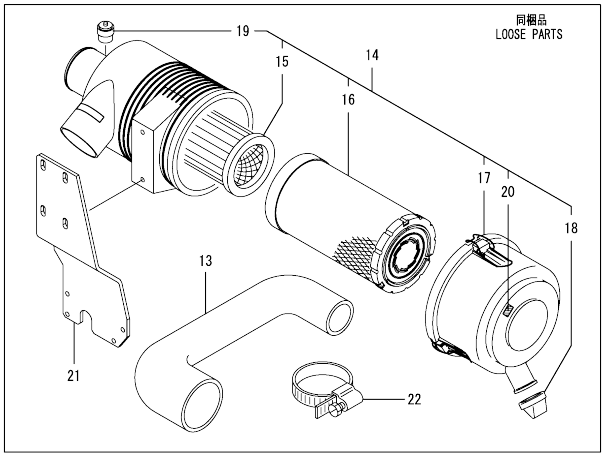


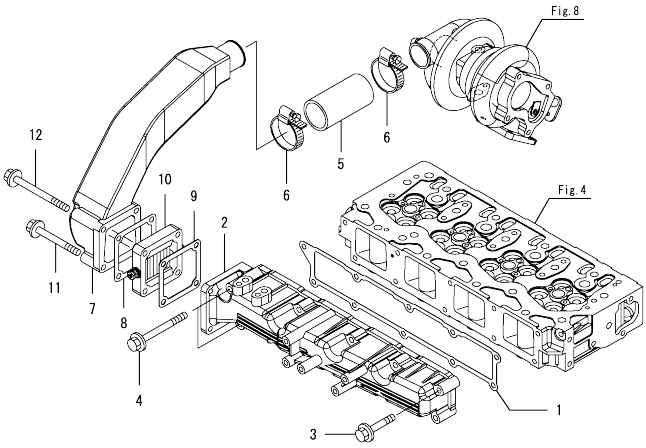


| No. | Lev. | Parts No. | Description | Q'ty (A) | (B) | (C) | (D) | (E) | (F) | I | R |
|---|---|---|---|---|---|---|---|---|---|---|---|
| 1 | 1 | 129907-12110 | GASKET, MANIFOLD | 1 | | | | | | | |
| 2 | 1 | 129944-12110 | MANIFOLD, AIR INTAKE | 1 | | | | | | | |
| 3 | 1 | 26106-080452 | BOLT, M8X 45 PLATED | 8 | | | | | | | |
| 4 | 1 | 26106-080802 | BOLT, M8X 80 PLATED | 2 | | | | | | | |
| 5 | 1 | 123951-18220 | JOINT, RUBBER | 1 | | | | | | | |
| 6 | 1 | 23000-054000 | CLAMP, 54 | 2 | | | | | | | |
| 7 | 1 | 129935-18350 | DUCT, AIR | 1 | | | | | | | |
| 8 | 1 | 119129-77020 | GASKET | 1 | | | | | | | |
| 9 | 1 | 121850-77021 | GASKET, AIR HEATER | 1 | | | | | | | |
| 10 | 1 | 119005-77051 | HEATER, AIR | 1 | | | | | | | |
| 11 | 1 | 26106-080702 | BOLT, M8X 70 PLATED | 2 | | | | | | | |
| 12 | 1 | 26106-080902 | BOLT, M8X 90 PLATED | 2 | | | | | | | |
| 13 | 1 | 129935-12070 | HOSE, AIR INTAKE | 1 | | | | | | | |
| 14 | 1 | 129937-12500 | CLEANER ASSY, AIR | 1 | | | | | | | |
| 15 | 2 | 119160-12570 | ELEMENT, INNER | 1 | | | | | | | |
| 16 | 2 | 129935-12520 | ELEMENT, OUTER | 1 | | | | | | | |
| 17 | 2 | 119160-12530 | COVER ASSY | 1 | | | | | | | |
| 18 | 2 | 119160-12540 | VALVE | 1 | | | | | | | |
| 19 | 2 | 126650-12680 | INDICATOR | 1 | | | | | | | |
| 20 | 2 | 129612-12650 | LABEL, MARKING | 1 | | | | | | | |
| 21 | 1 | 129944-12620 | BRACKET, CLEANER | 1 | | | | | | | |
| 22 | 1 | 23000-102000 | CLAMP, 102 | 1 | | | | | | | |

N:Old ◄Yes/No► New. Q:Old ◄No/Yes► New, R:Old ◄Yes/Yes► New, S:Old ◄No/No► New, W:Add, Z:Discontinued, F:Interchangeable by set, K:Q'ty Change

Copyright (C) YANMAR GLOBAL CS CO., LTD. All RightsReserved.

# Fig.6. EXHAUST MANIFOLD

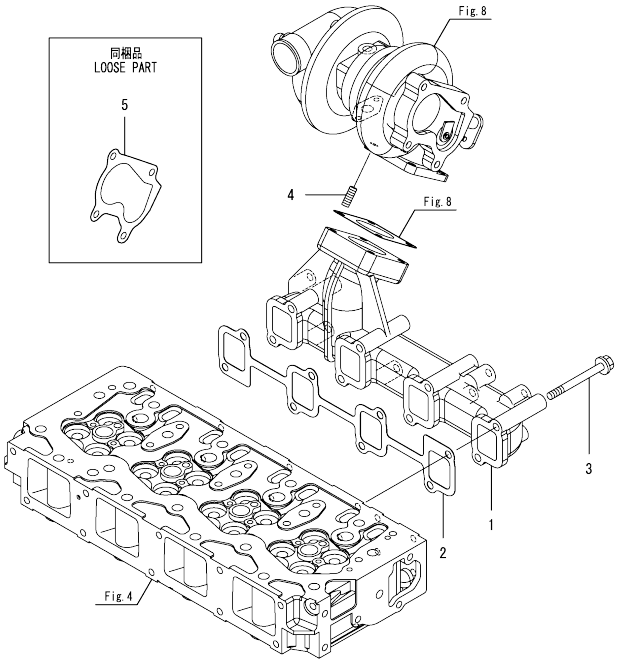




(A)=4TNV98T-GPGEC
(B)=
(C)=
(D)=
(E)=
(F)=

| No. | Lev. | Parts No. | Description | Q'ty (A) | (B) | (C) | (D) | (E) | (F) | I | R |
|---|---|---|---|---|---|---|---|---|---|---|---|
| 1 | 1 | 129935-13100 | MANIFOLD, EXHAUST | 1 | | | | | | | |
| 2 | 1 | 129900-13251 | GASKET, EXH.MANIFOLD | 1 | | | | | | | |
| 3 | 1 | 123900-13630 | BOLT, M8X80 | 8 | | | | | | | |
| 4 | 1 | 129418-18320 | BOLT, STUD M8X20 | 4 | | | | | | | |
| 5 | 1 | 123901-18080 | GASKET | 1 | | | | | | | |

N:Old ←Yes/No→ New. Q:Old ←No/Yes→ New. R:Old ←Yes/Yes→ New. S:Old ←No/No→ New. W:Add. Z:Discontinued. F:Interchangeable by set. K:Q'ty Change

Copyright (C) YANMAR GLOBAL CS CO., LTD. All RightsReserved.

# Fig.7. CAMSHAFT & DRIVING GEAR

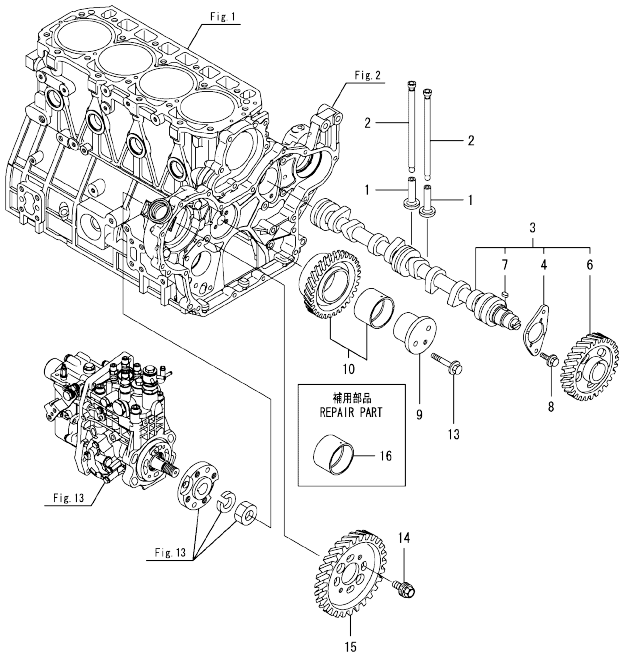


Remarks
(1) Repair part.



(A)=4TNV98T-GPGEC (D)=
(B)= (E)=
(C)= (F)=

| No. | Lev. | Parts No. | Description | Q'ty (A) | (B) | (C) | (D) | (E) | (F) | I | R |
|---|---|---|---|---|---|---|---|---|---|---|---|
| 1 | 1 | 129150-14200 | TAPPET | 8 | | | | | | | |
| 2 | 1 | 129907-14400 | PUSH-ROD | 8 | | | | | | | |
| 3 | 1 | 129908-14581 | CAMSHAFT ASSY | 1 | | | | | | | |
| 4 | 2 | 129150-02450 | BEARING, THRUST | 1 | | | | | | | |
| 6 | 2 | 129900-14100 | GEAR, CAMSHAFT | 1 | | | | | | | |
| 7 | 2 | 22512-070140 | KEY, 7X 14 | 1 | | | | | | | |
| 8 | 1 | 26106-080162 | BOLT, M8X 16 PLATED | 2 | | | | | | | |
| 9 | 1 | 123900-25060 | SHAFT, IDLE GEAR | 1 | | | | | | | |
| 10 | 1 | 129900-25100 | GEAR ASSY, IDLE | 1 | | | | | | | |
| 13 | 1 | 26106-080552 | BOLT, M8X 55 PLATED | 3 | | | | | | | |
| 14 | 1 | 129953-25300 | BOLT | 4 | | | | | | | |
| 15 | 1 | 129907-25900 | GEAR, PUMP | 1 | | | | | | | |
| 16 | 1 | 129150-25920 | BUSH, IDLE GEAR | 1 | | | | | | | 1 |

N:Old ←Yes/No→ New. Q:Old ←No/Yes→ New. R:Old ←Yes/Yes→ New. S:Old ←No/No→ New. W:Add. Z:Discontinued. F:Interchangeable by set. K:Q'ty Change

Copyright (C) YANMAR GLOBAL CS CO., LTD. All RightsReserved.

# Fig.8. TURBINE

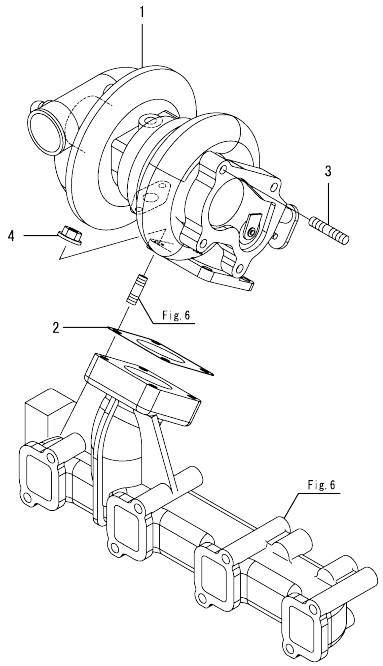




(A)=4TNV98T-GPGEC (D)=
(B)= (E)=
(C)= (F)=

| No. | Lev. | Parts No. | Description | Q'ty (A) | (B) | (C) | (D) | (E) | (F) | I | R |
|---|---|---|---|---|---|---|---|---|---|---|---|
| 1 | 1 | 129935-18010 | TURBOCHARGER, RHF5 | 1 | | | | | | | |
| 2 | 1 | 129472-18090 | GASKET | 1 | | | | | | | |
| 3 | 1 | 119131-18320 | BOLT, STUD M8X22 | 4 | | | | | | | |
| 4 | 1 | 26306-080002 | NUT, M8 | 4 | | | | | | | |

N:Old ◄Yes/No► New. Q:Old ◄No/Yes► New, R:Old ◄Yes/Yes► New. S:Old ◄No/No► New. W:Add. Z:Discontinued. F:Interchangeable by set. K:Q'ty Change

Copyright (C) YANMAR GLOBAL CS CO., LTD. All RightsReserved.

# Fig.9. CRANKSHAFT & PISTON

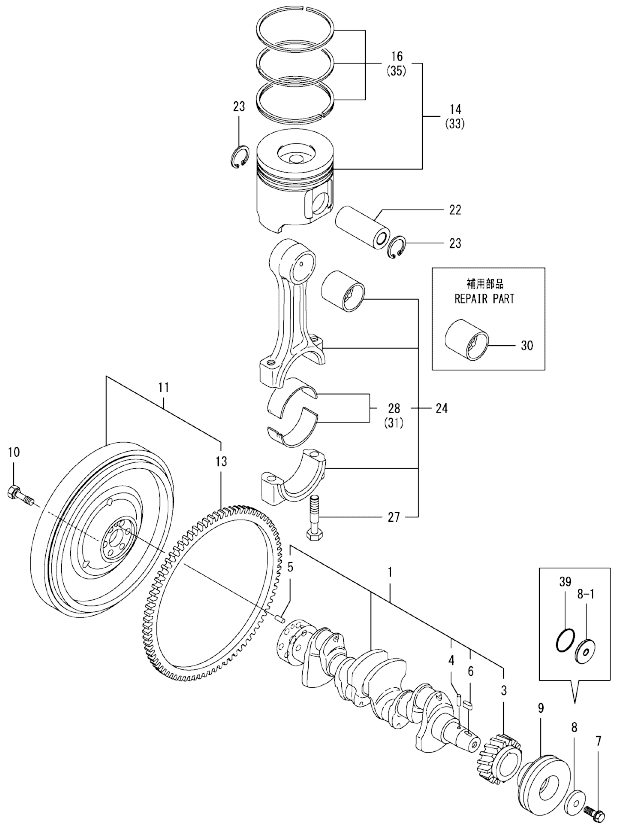


Remarks
(1) Repair part.
(2) Under-sized (U.S.=0.25) part.
(3) Over-sized (O.S.=0.25) part.



(A)=4TNV98T-GPGEC (D)=
(B)= (E)=
(C)= (F)=

| No. | Lev. | Parts No. | Description | Q'ty (A) | (B) | (C) | (D) | (E) | (F) | I | R |
|---|---|---|---|---|---|---|---|---|---|---|---|
| 1 | 1 | 129908-21000 | CRANKSHAFT ASSY | 1 | | | | | | | |
| 3 | 2 | 129900-21200 | GEAR, CRANKSHAFT | 1 | | | | | | | |
| 4 | 2 | 121850-21290 | PIN | 1 | | | | | | | |
| 5 | 2 | 121850-21920 | PIN, PARALLEL 10X22 | 1 | | | | | | | |
| 6 | 2 | 22512-070140 | KEY, 7X 14 | 1 | | | | | | | |
| 7 | 1 | 129916-21610 | BOLT | 1 | | | | | | | |
| 8 | 1 | 129900-21640 | WASHER | 1 | | | | | | | |
| 8-1 | 1 | 129960-21940 | WASHER, V-PULLEY | 1 | | | | | | N | |
| | (A=E145272) | | | | | | | | | | |
| 9 | 1 | 129907-21660 | V-PULLEY, CRANK 130 | 1 | | | | | | | |
| 10 | 1 | 121850-21130 | BOLT, FLYWHEEL | 6 | | | | | | | |
| 11 | 1 | 129920-21580 | FLYWHEEL ASSY | 1 | | | | | | | |
| 13 | 2 | 127410-21480 | GEAR, RING Z=129 | 1 | | | | | | | |
| 14 | 1 | 129908-22080 | PISTON ASSY | 4 | | | | | | | |
| 16 | 2 | 129907-22050 | RING SET, PISTON | 4 | | | | | | | |
| 22 | 1 | 120130-22301 | PIN, PISTON | 4 | | | | | | | |
| 23 | 1 | 22252-000300 | RING, 30 | 8 | | | | | | | |
| 24 | 1 | 129900-23001 | ROD ASSY, CONNECTING | 4 | | | | | | | |
| 27 | 2 | 129900-23200 | BOLT, CONNECTING ROD | 8 | | | | | | | |
| 28 | 2 | 129900-23601 | BEARING, CRANK PIN | 4 | | | | | | | |
| 30 | 1 | 129900-23911 | BEARING, PISTON PIN | 4 | | | | | | | 1 |
| 31 | 1 | 129900-23611 | BEARING ASSY, 0.25US | 4 | | | | | | | 2 |
| 33 | 1 | 729908-22900 | PISTON ASSY, 0.25 OS | 4 | | | | | | | 3 |
| 35 | 2 | 729907-22950 | RING SET, 0.25 OS | 4 | | | | | | | 3 |
| 39 | 1 | 129960-21930 | GASKET, WASHER | 1 | | | | | | W | |
| | (A=E145272) | | | | | | | | | | |

N:Old $\frac{\text{Yes}}{\text{No}}$ New. Q:Old $\frac{\text{No}}{\text{Yes}}$ New. R:Old $\frac{\text{Yes}}{\text{Yes}}$ New. S:Old $\frac{\text{No}}{\text{No}}$ New. W:Add. Z:Discontinued. F:Interchangeable by set. K:Q'ty Change

Copyright (C) YANMAR GLOBAL CS CO., LTD. All RightsReserved.

# Fig.10. LUB. OIL SYSTEM

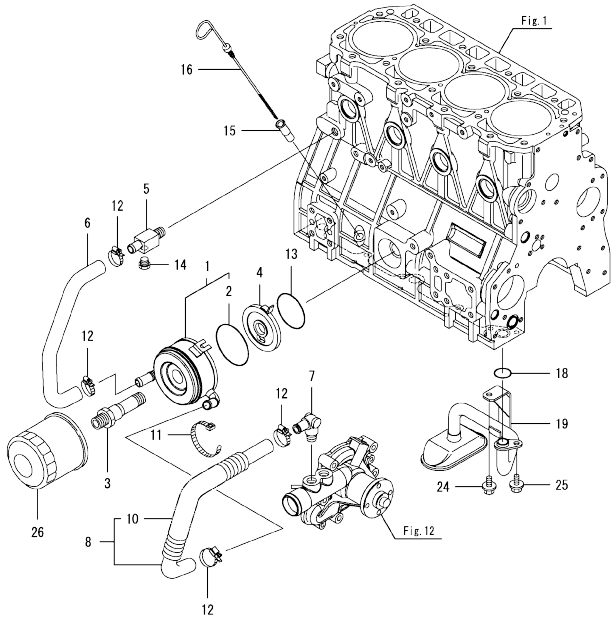


Remarks
(1) Repair part.



(A)=4TNV98T-GPGEC (D)=
(B)= (E)=
(C)= (F)=

| No. | Lev. | Parts No. | Description | Q'ty (A) | (B) | (C) | (D) | (E) | (F) | I | R |
|---|---|---|---|---|---|---|---|---|---|---|---|
| 1 | 1 | 129908-33010 | COOLER ASSY, OIL | 1 | | | | | | | |
| 2 | 2 | 123912-33050 | O-RING | 1 | | | | | | | |
| 3 | 1 | 123912-33100 | BOLT, COOLER | 1 | | | | | | | |
| 4 | 1 | 129908-33101 | BRACKET, OIL COOLER | 1 | | | | | | | |
| 5 | 1 | 129006-44480 | JOINT | 1 | | | | | | | |
| 6 | 1 | 129908-49060 | HOSE, WATER | 1 | | | | | | | |
| 7 | 1 | 129466-49300 | ELBOW, PT3/8 | 1 | | | | | | | |
| 8 | 1 | 123910-49600 | HOSE ASSY, WATER | 1 | | | | | | | |
| 10 | 2 | 123910-49610 | TUBE, CORRUGATED | 1 | | | | | | | |
| 11 | 1 | 121750-59890 | BAND, NYLON | 1 | | | | | | | |
| 12 | 1 | 23000-025000 | CLAMP, 25 | 4 | | | | | | | |
| 13 | 1 | 24321-000600 | O-RING, 1AG60.0 | 1 | | | | | | | |
| 14 | 1 | 171056-49120 | PLUG, DRAIN R1/4 | 1 | | | | | | | |
| 15 | 1 | 121520-34810 | GUIDE, DIPSTICK | 1 | | | | | | | |
| 16 | 1 | 129953-34830 | DIPSTICK | 1 | | | | | | | |
| 18 | 1 | 129900-32030 | O-RING, P20 | 1 | | | | | | | |
| 19 | 1 | 129953-35000 | PIPE ASSY, OIL INLET | 1 | | | | | | | |
| 24 | 1 | 26106-080122 | BOLT, M8X 12 PLATED | 1 | | | | | | | |
| 25 | 1 | 26106-080162 | BOLT, M8X 16 PLATED | 1 | | | | | | | |
| 26 | 1 | 119005-35151 | FILTER, D80X100 | 1 | | | | | | | 1 |

N:Old ←Yes/No→ New. Q:Old ←No/Yes→ New. R:Old ←Yes/Yes→ New. S:Old ←No/No→ New. W:Add. Z:Discontinued. F:Interchangeable by set. K:Q'ty Change

Copyright (C) YANMAR GLOBAL CS CO., LTD. All RightsReserved.

# Fig.11. LUB. OIL LINE



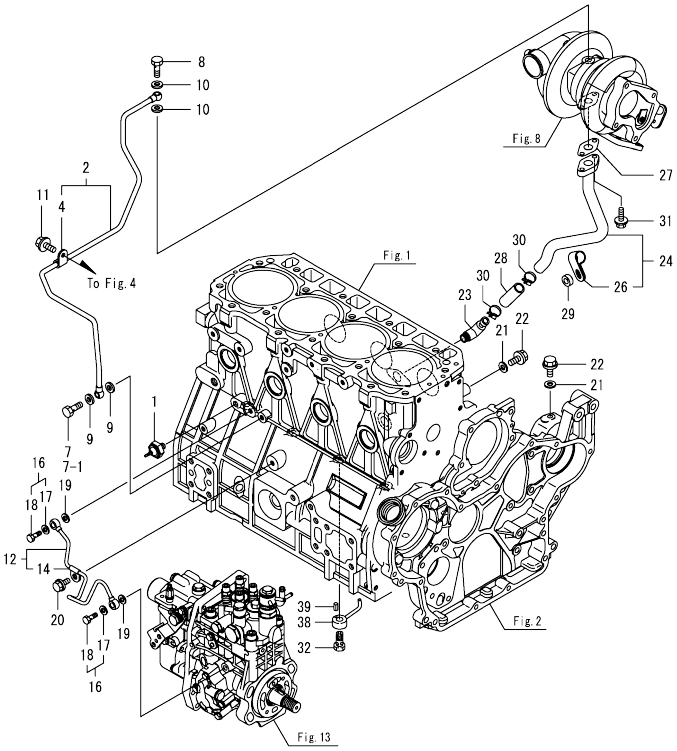


(A)=4TNV98T-GPGEC (D)=
(B)= (E)=
(C)= (F)=

| No. | Lev. | Parts No. | Description | Q'ty (A) | (B) | (C) | (D) | (E) | (F) | I | R |
|---|---|---|---|---|---|---|---|---|---|---|---|
| 1 | 1 | 114250-39450 | SWITCH, HYDRAULIC | 1 | | | | | | | |
| 2 | 1 | 129935-39040 | PIPE ASSY, OIL | 1 | | | | | | | |
| 4 | 2 | 124223-39900 | RETAINER | 1 | | | | | | | |
| 7 | 1 | 105010-39140 | BOLT, PIPE JOINT | 1 | | | | | | | |
| 7-1 | 1 | 129198-59540 | BOLT, PIPE JOINT M8 | 1 | | | | | | S | |
| | (A=E168027) | | | | | | | | | | |
| 8 | 1 | 121252-39150 | BOLT, JOINT M10X1.5 | 1 | | | | | | | |
| 9 | 1 | 22190-080002 | WASHER, SEAL 6 | 2 | | | | | | | |
| 10 | 1 | 23414-100000 | GASKET, 10X1.0 | 2 | | | | | | | |
| 11 | 1 | 26106-080122 | BOLT, M8X 12 PLATED | 1 | | | | | | | |
| 12 | 1 | 129907-39061 | PIPE ASSY, OIL | 1 | | | | | | | |
| 14 | 2 | 123907-39500 | RETAINER, PIPE | 1 | | | | | | | |
| 16 | 1 | 129005-59830 | BOLT ASSY, JOINT M8 | 2 | | | | | | | |
| 17 | 2 | 22190-080002 | WASHER, SEAL 6 | 2 | | | | | | | |
| 18 | 2 | 23857-030000 | BOLT, JOINT 3 | 2 | | | | | | | |
| 19 | 1 | 22190-080002 | WASHER, SEAL 6 | 2 | | | | | | | |
| 20 | 1 | 26106-080122 | BOLT, M8X 12 PLATED | 1 | | | | | | | |
| 21 | 1 | 22190-080002 | WASHER, SEAL 6 | 2 | | | | | | | |
| 22 | 1 | 26106-080122 | BOLT, M8X 12 PLATED | 2 | | | | | | | |
| 23 | 1 | 124070-13300 | ELBOW, PT3/8 | 1 | | | | | | | |
| 24 | 1 | 129935-39610 | PIPE, OIL | 1 | | | | | | | |
| 26 | 2 | 123910-39850 | RETAINER | 1 | | | | | | | |
| 27 | 1 | 129908-39690 | GASKET | 1 | | | | | | | |
| 28 | 1 | 123901-39820 | HOSE, LO RETURN | 1 | | | | | | | |
| 29 | 1 | 106500-44810 | SPACER, PULLEY | 1 | | | | | | | |
| 30 | 1 | 23000-025000 | CLAMP, 25 | 2 | | | | | | | |
| 31 | 1 | 26106-060162 | BOLT, M6X 16 PLATED | 2 | | | | | | | |
| 32 | 1 | 129908-39410 | VALVE ASSY, CHECK | 4 | | | | | | | |
| 38 | 1 | 119000-39650 | NOZZLE, COOLING | 4 | | | | | | | |
| 39 | 1 | 22351-030010 | PIN, SPRING 3.0X10 | 4 | | | | | | | |

N:Old ←Yes/No→ New. Q:Old ←No/Yes→ New. R:Old ←Yes/Yes→ New. S:Old ←No/No→ New. W:Add. Z:Discontinued. F:Interchangeable by set. K:Q'ty Change

Copyright (C) YANMAR GLOBAL CS CO., LTD. All RightsReserved.

# Fig.12. COOLING WATER SYSTEM



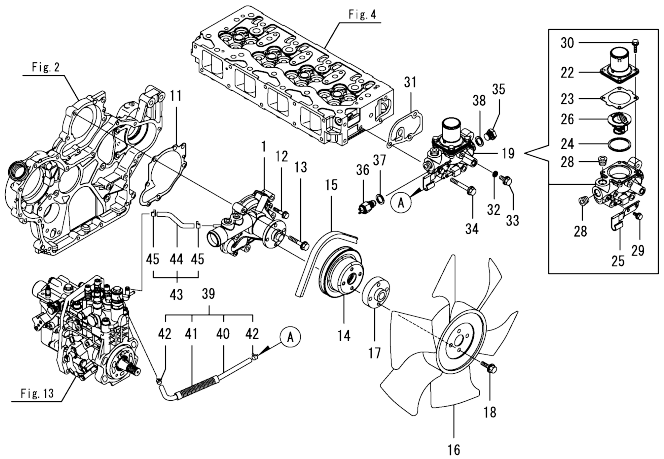


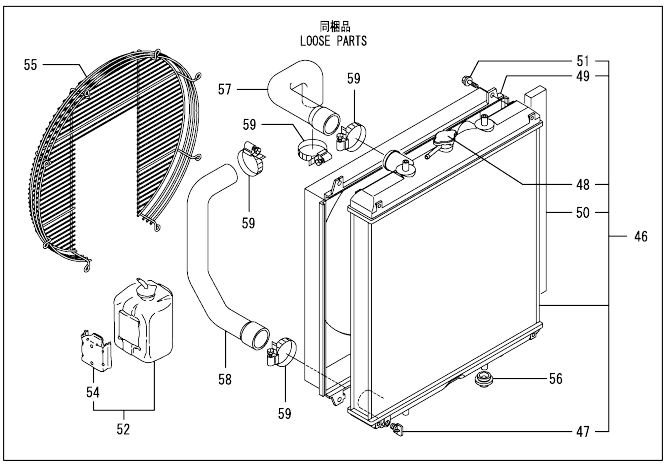


(A)=4TNV98T-GPGEC
(B)=
(C)=
(D)=
(E)=
(F)=

| No. | Lev. | Parts No. | Description | Q'ty (A) | (B) | (C) | (D) | (E) | (F) | I | R |
|---|---|---|---|---|---|---|---|---|---|---|---|
| 1 | 1 | 129907-42001 | PUMP ASSY, WATER | 1 | | | | | | | |
| 11 | 1 | 129900-42020 | GASKET, WATER PUMP | 1 | | | | | | | |
| 12 | 1 | 26106-060302 | BOLT, M6X 30 PLATED | 2 | | | | | | | |
| 13 | 1 | 26106-080552 | BOLT, M8X 55 PLATED | 5 | | | | | | | |
| 14 | 1 | 129900-42461 | V-PULLEY, C.W.PUMP | 1 | | | | | | | |
| 15 | 1 | 129940-42320 | V-BELT, A41 | 1 | | | | | | | |
| 16 | 1 | 129916-44740 | FAN, COOLING D=430 | 1 | | | | | | | |
| 17 | 1 | 119130-44760 | SPACER, FAN | 1 | | | | | | | |
| 18 | 1 | 26106-080302 | BOLT, M8X 30 PLATED | 4 | | | | | | | |
| 19 | 1 | 129907-49800 | CASE ASSY,THERMOSTAT | 1 | | | | | | | |
| 22 | 2 | 129916-49530 | COVER, THERMOSTAT | 1 | | | | | | | |
| 23 | 2 | 121850-49540 | GASKET, THERMOSTAT | 1 | | | | | | | |
| 24 | 2 | 121850-49550 | GASKET, THERMOSTAT | 1 | | | | | | | |
| 25 | 2 | 129907-49730 | RETAINER, PIPE | 1 | | | | | | | |
| 26 | 2 | 121850-49810 | THERMOSTAT, 71C | 1 | | | | | | | |
| 28 | 2 | 23875-030000 | PLUG, R03 | 2 | | | | | | | |
| 29 | 2 | 26106-060122 | BOLT, M6X 12 PLATED | 1 | | | | | | | |
| 30 | 2 | 26106-060202 | BOLT, M6X 20 PLATED | 4 | | | | | | | |
| 31 | 1 | 129900-49870 | GASKET, THERMOSTAT | 1 | | | | | | | |
| 32 | 1 | 23414-080000 | GASKET, 8X1.0 | 1 | | | | | | | |
| 33 | 1 | 26106-080122 | BOLT, M8X 12 PLATED | 1 | | | | | | | |
| 34 | 1 | 26106-080602 | BOLT, M8X 60 PLATED | 3 | | | | | | | |
| 35 | 1 | 121450-42450 | PLUG, M16 | 1 | | | | | | | |
| 36 | 1 | 121250-44901 | SWITCH, THERMO 110 | 1 | | | | | | | |
| 37 | 1 | 124465-44950 | GASKET, 16 | 1 | | | | | | | |
| 38 | 1 | 124465-44950 | GASKET, 16 | 1 | | | | | | | |
| 39 | 1 | 129907-49610 | HOSE ASSY, WATER | 1 | | | | | | | |
| 40 | 2 | 129907-49710 | HOSE, WATER | 1 | | | | | | | |
| 41 | 2 | 129907-49750 | TUBE, CORRUGATED | 1 | | | | | | | |
| 42 | 2 | 124722-59050 | CLAMP, HOSE 9 | 2 | | | | | | | |
| 43 | 1 | 129907-49620 | HOSE ASSY, WATER | 1 | | | | | | | |
| 44 | 2 | 129907-49720 | HOSE, WATER | 1 | | | | | | | |
| 45 | 2 | 124722-59050 | CLAMP, HOSE 9 | 2 | | | | | | | |
| 46 | 1 | 129940-44500 | RADIATOR ASSY | 1 | | | | | | | |
| 47 | 2 | 129508-44550 | COCK ASSY | 1 | | | | | | | |
| 48 | 2 | 129107-44590 | CAP, RADIATOR | 1 | | | | | | | |
| 49 | 2 | 129907-44600 | SHROUD | 1 | | | | | | | |
| 50 | 2 | 129907-44610 | GASKET | 2 | | | | | | | |
| 51 | 2 | 26014-060122 | BOLT, M6X 12 | 4 | | | | | | | |
| 52 | 1 | 720445-44200 | TANK ASSY, SUB | 1 | | | | | | | |
| 54 | 2 | 120445-44540 | SUPPORT | 1 | | | | | | | |
| 55 | 1 | 129907-44560 | GUARD, FAN | 1 | | | | | | | |
| 56 | 1 | 119255-44660 | ABSORBER | 4 | | | | | | | |
| 57 | 1 | 129981-49050 | HOSE, WATER | 1 | | | | | | | |
| 58 | 1 | 129981-49062 | HOSE, WATER | 1 | | | | | | | |
| 59 | 1 | 23000-060000 | CLAMP, 60 | 4 | | | | | | | |

N:Old ◄Yes/No► New. Q:Old ◄No/Yes► New. R:Old ◄Yes/Yes► New. S:Old ◄No/No► New. W:Add. Z:Discontinued. F:Interchangeable by set. K:Q'ty Change

Copyright (C) YANMAR GLOBAL CS CO., LTD. All RightsReserved.

# Fig.13. FUEL INJECTION PUMP

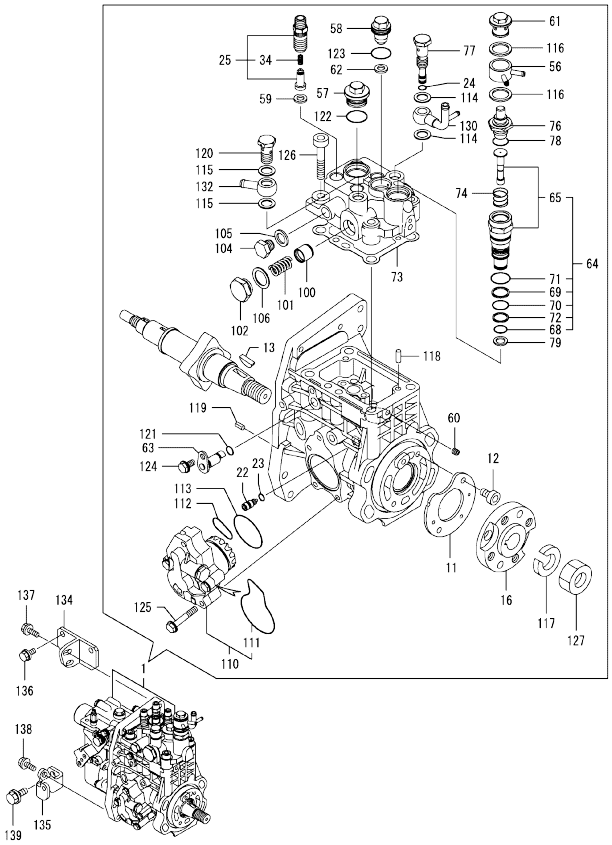


Remarks
(1) Governor (Fig.14) is
incorporated in this
Fuel Injection Pump (Ref.1).



(A)=4TNV98T-GPGEC (D)=
(B)= (E)=
(C)= (F)=

| No. | Lev. | Parts No. | Description | Q'ty (A) | (B) | (C) | (D) | (E) | (F) | I | R |
|---|---|---|---|---|---|---|---|---|---|---|---|
| 1 | 1 | 729937-51390 | FIE ASSY | 1 | | | | | | | 1 |
| 11 | 2 | 129928-51900 | COVER | 1 | | | | | | | |
| 12 | 2 | 129008-51920 | BOLT, SOCKET M6X10 | 2 | | | | | | | |
| 13 | 2 | 144626-51090 | FEATHER KEY, 5X19 | 1 | | | | | | | |
| 16 | 2 | 158563-51150 | FLANGE | 1 | | | | | | | |
| 22 | 2 | 158600-51270 | STOPPER, TAPPET | 1 | | | | | | | |
| 23 | 2 | 158563-51281 | O-RING, 4D S6 | 1 | | | | | | | |
| 24 | 2 | 158563-51281 | O-RING, 4D S6 | 1 | | | | | | | |
| 25 | 2 | 129509-51390 | VALVE ASSY, DELIVERY | 4 | | | | | | | |
| 34 | 3 | 158563-51330 | SPRING, DELIVERY | 4 | | | | | | | |
| 56 | 2 | 158553-51551 | JOINT, COOLING WATER | 1 | | | | | | | |
| 57 | 2 | 158601-51550 | PLUG, M22 | 1 | | | | | | | |
| 58 | 2 | 129907-51560 | PLUG, M16 | 1 | | | | | | | |
| 59 | 2 | 158552-51571 | GASKET, PLUG | 4 | | | | | | | |
| 60 | 2 | 158557-51570 | PLUG, RACK | 1 | | | | | | | |
| 61 | 2 | 158601-51570 | PLUG | 1 | | | | | | | |
| 62 | 2 | 129906-51580 | GASKET, PLUG | 1 | | | | | | | |
| 63 | 2 | 158552-51580 | LIFTER, LINK | 1 | | | | | | | |
| 64 | 2 | 119802-51590 | TIMER ASSY | 1 | | | | | | | |
| 65 | 3 | 119802-51600 | TIMER ASSY | 1 | | | | | | | |
| 68 | 3 | 158553-51670 | O-RING | 1 | | | | | | | |
| 69 | 3 | 119802-51680 | RING, BACKUP | 1 | | | | | | | |
| 70 | 3 | 119802-51690 | O-RING | 1 | | | | | | | |
| 71 | 3 | 24356-190200 | O-RING, 4D19020 | 1 | | | | | | | |
| 72 | 3 | 24372-000150 | RING, BACK UP T2P15 | 1 | | | | | | | |
| 73 | 2 | 158560-51600 | GASKET | 1 | | | | | | | |
| 74 | 2 | 158553-51630 | SPRING, TIMER | 1 | | | | | | | |
| 76 | 2 | 158553-51640 | THERMOELEMENT | 1 | | | | | | | |
| 77 | 2 | 158601-51650 | JOINT, OVER FLOW | 1 | | | | | | | |
| 78 | 2 | 158553-51660 | O-RING, P14 | 1 | | | | | | | |
| 79 | 2 | 158553-51680 | GASKET, TIMER | 1 | | | | | | | |
| 100 | 2 | 158601-51770 | PISTON, ACCUMLATOR | 1 | | | | | | | |
| 101 | 2 | 158552-51781 | SPRING, ACCUMULATOR | 1 | | | | | | | |
| 102 | 2 | 158601-51790 | PLUG | 1 | | | | | | | |
| 104 | 2 | 158553-51930 | PLUG, M12 | 1 | | | | | | | |
| 105 | 2 | 22190-120002 | WASHER, SEAL 12 | 1 | | | | | | | |
| 106 | 2 | 22190-180002 | WASHER, SEAL 18 | 1 | | | | | | | |
| 110 | 2 | 158552-52100 | PUMP ASSY, FUEL FEED | 1 | | | | | | | |
| 111 | 3 | 158552-52500 | O-RING | 1 | | | | | | | |
| 112 | 2 | 158552-52311 | O-RING | 1 | | | | | | | |
| 113 | 2 | 158552-52400 | O-RING, 4E S42 | 1 | | | | | | | |
| 114 | 2 | 22190-120002 | WASHER, SEAL 12 | 2 | | | | | | | |
| 115 | 2 | 22190-120002 | WASHER, SEAL 12 | 2 | | | | | | | |
| 116 | 2 | 22190-180002 | WASHER, SEAL 18 | 2 | | | | | | | |
| 117 | 2 | 22217-180000 | WASHER, SPRING 18 | 1 | | | | | | | |
| 118 | 2 | 22312-050140 | PIN, PARALLEL M5X14 | 2 | | | | | | | |
| 119 | 2 | 22351-050010 | PIN, SPRING 5.0X10 | 2 | | | | | | | |
| 120 | 2 | 23857-060000 | BOLT, JOINT 6 | 1 | | | | | | | |
| 121 | 2 | 24311-000070 | O-RING, 1AP7.0 | 1 | | | | | | | |
| 122 | 2 | 24356-190200 | O-RING, 4D19020 | 1 | | | | | | | |
| 123 | 2 | 24356-240210 | O-RING, 4D24021 | 1 | | | | | | | |

N:Old ←Yes/No→ New. Q:Old ←No/Yes→ New. R:Old ←Yes/Yes→ New. S:Old ←No/No→ New. W:Add. Z:Discontinued. F:Interchangeable by set. K:Q'ty Change

++ CONTINUE ++

Copyright (C) YANMAR GLOBAL CS CO., LTD. All RightsReserved.

# Fig.13. FUEL INJECTION PUMP

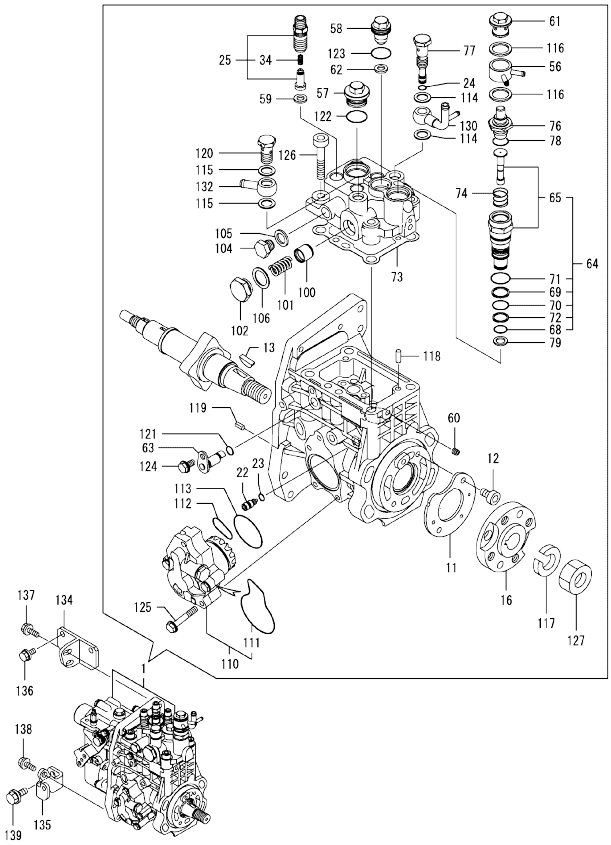


Remarks
(1) Governor (Fig.14) is incorporated in this Fuel Injection Pump (Ref.1).



(A)=4TNV98T-GPGEC (D)=
(B)= (E)=
(C)= (F)=

| No. | Lev. | Parts No. | Description | Q'ty (A) | (B) | (C) | (D) | (E) | (F) | I | R |
|---|---|---|---|---|---|---|---|---|---|---|---|
| 124 | 2 | 26106-060102 | BOLT, M6X 10 PLATED | 1 | | | | | | | |
| 125 | 2 | 26106-060352 | BOLT, M6X 35 PLATED | 4 | | | | | | | |
| 126 | 2 | 26450-100452 | BOLT, M10X 45 | 4 | | | | | | | |
| 127 | 2 | 26776-180002 | NUT, LOCK M18 | 1 | | | | | | | |
| 130 | 2 | 158552-51670 | JOINT, OVER FLOW | 1 | | | | | | | |
| 132 | 2 | 129916-59020 | JOINT, PIPE 12 | 1 | | | | | | | |
| 134 | 1 | 129907-01950 | RETAINER, PUMP | 1 | | | | | | | |
| 135 | 1 | 129907-01960 | RETAINER, PUMP | 1 | | | | | | | |
| 136 | 1 | 26106-080162 | BOLT, M8X 16 PLATED | 2 | | | | | | | |
| 137 | 1 | 26106-080222 | BOLT, M8X 22 PLATED | 2 | | | | | | | |
| 138 | 1 | 26106-080222 | BOLT, M8X 22 PLATED | 1 | | | | | | | |
| 139 | 1 | 26106-100202 | BOLT, M10X 20 PLATED | 1 | | | | | | | |

N:Old ←Yes/No→ New. Q:Old ←No/Yes→ New. R:Old ←Yes/Yes→ New. S:Old ←No/No→ New. W:Add. Z:Discontinued. F:Interchangeable by set. K:Q'ty Change

Copyright (C) YANMAR GLOBAL CS CO., LTD. All RightsReserved.

# Fig.14. GOVERNOR

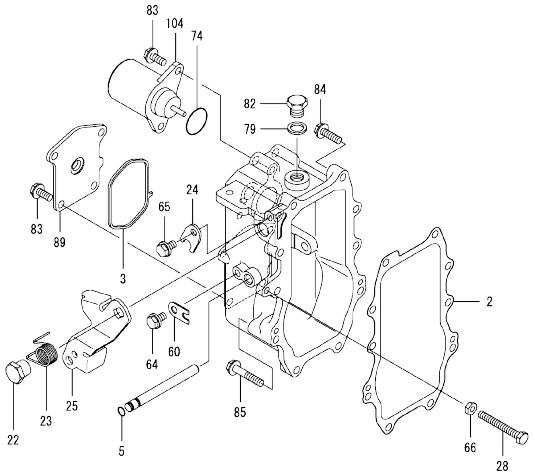


Remarks
* This figure (Governor) is incorporated in the Fuel Injection Pump(Fig.13).



(A)=4TNV98T-GPGEC (D)=
(B)= (E)=
(C)= (F)=

| No. | Lev. | Parts No. | Description | Q'ty (A) | (B) | (C) | (D) | (E) | (F) | I | R |
|---|---|---|---|---|---|---|---|---|---|---|---|
| 2 | 2 | 158560-61050 | GASKET | 1 | | | | | | | |
| 3 | 2 | 158560-61071 | GASKET | 1 | | | | | | | |
| 5 | 2 | 129155-51280 | O-RING, S6 | 1 | | | | | | | |
| 22 | 2 | 129255-61410 | NUT, M8 | 1 | | | | | | | |
| 23 | 2 | 119807-61420 | SPRING, RETURN | 1 | | | | | | | |
| 24 | 2 | 158560-61430 | STOPPER, SHAFT | 1 | | | | | | | |
| 25 | 2 | 129937-61440 | LEVER, REGULATOR | 1 | | | | | | | |
| 28 | 2 | 129155-61460 | BOLT, LIMITING | 1 | | | | | | | |
| 60 | 2 | 119660-61901 | STOPPER, SHAFT | 1 | | | | | | | |
| 64 | 2 | 26106-060102 | BOLT, M6X 10 PLATED | 1 | | | | | | | |
| 65 | 2 | 26106-060102 | BOLT, M6X 10 PLATED | 1 | | | | | | | |
| 66 | 2 | 26756-060002 | NUT, LOCK M6 | 1 | | | | | | | |
| 74 | 2 | 158552-61900 | O-RING | 1 | | | | | | | |
| 79 | 2 | 22190-160002 | WASHER, SEAL 16 | 1 | | | | | | | |
| 82 | 2 | 23887-160002 | PLUG, 16 | 1 | | | | | | | |
| 83 | 2 | 26106-060142 | BOLT, M6X 14 PLATED | 6 | | | | | | | |
| 84 | 2 | 26106-060252 | BOLT, M6X 25 PLATED | 8 | | | | | | | |
| 85 | 2 | 26106-060402 | BOLT, M6X 40 PLATED | 2 | | | | | | | |
| 89 | 2 | 129946-61061 | COVER, GOVERNOR CASE | 1 | | | | | | | |
| 104 | 2 | 119653-77950 | SOLENOID, STOP | 1 | | | | | | | |

N:Old ←Yes/No→ New. Q:Old ←No/Yes→ New, R:Old ←Yes/Yes→ New. S:Old ←No/No→ New. W:Add. Z:Discontinued. F:Interchangeable by set. K:Q'ty Change

Copyright (C) YANMAR GLOBAL CS CO., LTD. All RightsReserved.

# Fig.15. FUEL INJECTION VALVE

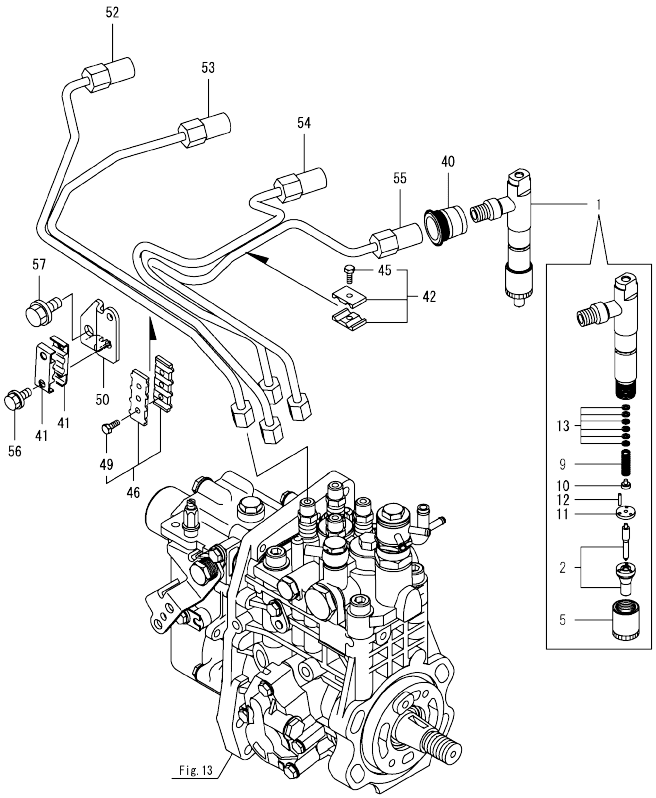




(A)=4TNV98T-GPGEC (D)=
(B)= (E)=
(C)= (F)=

| No. | Lev. | Parts No. | Description | Q'ty (A) | (B) | (C) | (D) | (E) | (F) | I | R |
|---|---|---|---|---|---|---|---|---|---|---|---|
| 1 | 1 | 729906-53100 | FUEL INJECTOR ASSY | 4 | | | | | | | |
| 2 | 2 | 129906-53000 | NOZZLE ASSY, F.I. | 4 | | | | | | | |
| 5 | 2 | 114250-53080 | NUT, NOZZLE | 4 | | | | | | | |
| 9 | 2 | 114250-53120 | SPRING, NOZZLE | 4 | | | | | | | |
| 10 | 2 | 114250-53130 | SEAT, SPRING | 4 | | | | | | | |
| 11 | 2 | 114250-53140 | SPACER | 4 | | | | | | | |
| 12 | 2 | 114250-53210 | PIN | 8 | | | | | | | |
| 13 | 2 | 119803-53400 | SHIM SET | 4 | | | | | | | |
| 40 | 1 | 123907-11601 | SEAL, PIPE | 4 | | | | | | | |
| 41 | 1 | 122780-59100 | RETAINER | 2 | | | | | | | |
| 42 | 1 | 119305-59120 | RETAINER, PIPE | 1 | | | | | | | |
| 45 | 2 | 129150-59131 | BOLT, M4X14 | 1 | | | | | | | |
| 46 | 1 | 129550-59120 | RETAINER, PIPE | 1 | | | | | | | |
| 49 | 2 | 129150-59131 | BOLT, M4X14 | 2 | | | | | | | |
| 50 | 1 | 129907-59710 | SUPPORT | 1 | | | | | | | |
| 52 | 1 | 129908-59810 | PIPE ASSY, INJECTION | 1 | | | | | | | |
| 53 | 1 | 129908-59820 | PIPE ASSY, INJECTION | 1 | | | | | | | |
| 54 | 1 | 129908-59830 | PIPE ASSY, INJECTION | 1 | | | | | | | |
| 55 | 1 | 129908-59840 | PIPE ASSY, INJECTION | 1 | | | | | | | |
| 56 | 1 | 26106-060162 | BOLT, M6X 16 PLATED | 2 | | | | | | | |
| 57 | 1 | 26106-080182 | BOLT, M8X 18 PLATED | 1 | | | | | | | |

N:Old ←Yes/No→ New. Q:Old ←No/Yes→ New. R:Old ←Yes/Yes→ New. S:Old ←No/No→ New. W:Add. Z:Discontinued. F:Interchangeable by set. K:Q'ty Change

Copyright (C) YANMAR GLOBAL CS CO., LTD. All RightsReserved.

# Fig.16. FUEL LINE



(A)=4TNV98T-GPGEC
(B)=
(C)=
(D)=
(E)=
(F)=

| No. | Lev. | Parts No. | Description | Q'ty (A) | (B) | (C) | (D) | (E) | (F) | I | R |
|---|---|---|---|---|---|---|---|---|---|---|---|
| 1 | 1 | 129004-55612 | BRACKET, FILTER | 1 | | | | | | | |
| 2 | 1 | 129907-55801 | FILTER, FUEL | 1 | | | | | | | |
| 3 | 1 | 26106-080302 | BOLT, M8X 30 PLATED | 2 | | | | | | | |
| 4 | 1 | 129457-59010 | HOSE ASSY, FUEL | 1 | | | | | | | |
| 5 | 2 | 124766-59050 | CLAMP, HOSE 11.5 | 2 | | | | | | | |
| 6 | 2 | 129957-59120 | TUBE, CORRUGATED 15 | 1 | | | | | | | |
| 7 | 2 | 105025-59750 | HOSE, FUEL | 1 | | | | | | | |
| 8 | 1 | 129981-59010 | HOSE ASSY, FUEL | 1 | | | | | | | |
| 9 | 2 | 124766-59050 | CLAMP, HOSE 11.5 | 2 | | | | | | | |
| 10 | 2 | 129950-59221 | TUBE, CORRUGATED 15 | 1 | | | | | | | |
| 11 | 2 | 129980-59510 | HOSE, FUEL | 1 | | | | | | | |
| 12 | 1 | 121750-59890 | BAND, NYLON | 1 | | | | | | | |
| 13 | 1 | 129907-59140 | PIPE ASSY, RETURN | 1 | | | | | | | |
| 14 | 1 | 123907-59540 | BOLT, PIPE JOINT M6 | 5 | | | | | | | |
| 15 | 1 | 123907-59550 | GASKET | 5 | | | | | | | |
| 16 | 1 | 129486-59551 | HOSE ASSY, RETURN | 1 | | | | | | | |
| 17 | 2 | 124722-59050 | CLAMP, HOSE 9 | 2 | | | | | | | |
| 19 | 1 | 123907-59560 | JOINT, HOSE | 1 | | | | | | | |
| 20 | 1 | 22190-080002 | WASHER, SEAL 6 | 1 | | | | | | | |
| 21 | 1 | 119225-52102 | PUMP, FUEL FEED | 1 | | | | | | | |
| 22 | 1 | 119802-55700 | SEPARATOR ASSY,WATER | 1 | | | | | | | |
| 23 | 2 | 129100-55690 | RING, CUP RETAINING | 1 | | | | | | | |
| 24 | 2 | 119802-55710 | ELEMENT | 1 | | | | | | | |
| 25 | 2 | 119802-55730 | CUP ASSY, SEPARATOR | 1 | | | | | | | |
| 26 | 2 | 24311-000160 | O-RING, 1AP16.0 | 1 | | | | | | | |
| 27 | 2 | 24321-000650 | O-RING, 1AG65.0 | 1 | | | | | | | |

N:Old ←Yes/No→ New. Q:Old ←No/Yes→ New. R:Old ←Yes/Yes→ New. S:Old ←No/No→ New. W:Add. Z:Discontinued. F:Interchangeable by set. K:Q'ty Change

Copyright (C) YANMAR GLOBAL CS CO., LTD. All RightsReserved.

# Fig.17. STARTING MOTOR

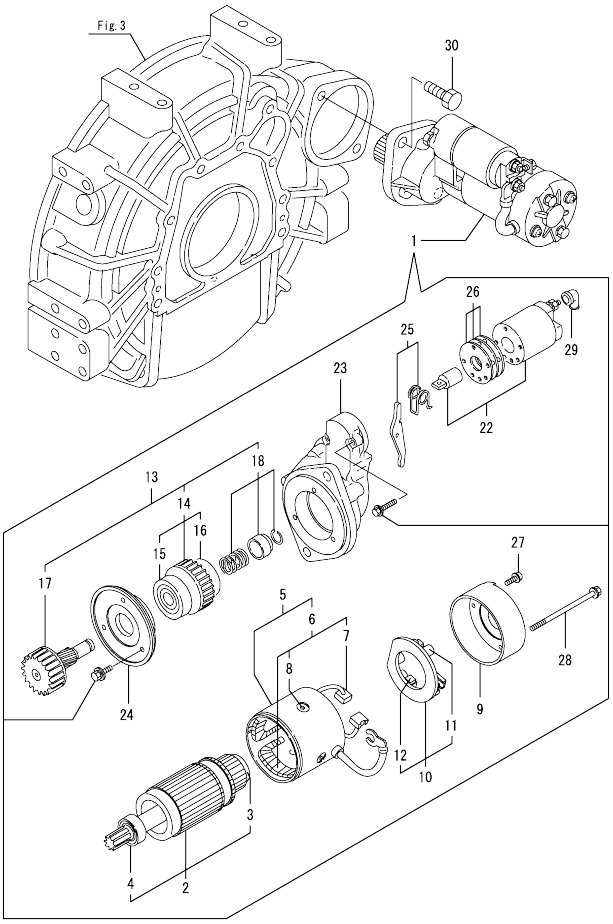




(A)=4TNV98T-GPGEC (D)=
(B)= (E)=
(C)= (F)=

| No. | Lev. | Parts No. | Description | Q'ty (A) | (B) | (C) | (D) | (E) | (F) | I | R |
|---|---|---|---|---|---|---|---|---|---|---|---|
| 1 | 1 | 129900-77040 | STARTER ASSY | 1 | | | | | | | |
| 2 | 2 | 129900-77120 | ARMATURE ASSY | 1 | | | | | | | |
| 3 | 3 | 171008-77410 | BEARING, BALL | 1 | | | | | | | |
| 4 | 3 | 171008-77420 | BEARING, BALL | 1 | | | | | | | |
| 5 | 2 | 129900-77130 | YOKE ASSY | 1 | | | | | | | |
| 6 | 3 | 129900-77140 | COIL ASSY, FIELD | 1 | | | | | | | |
| 7 | 4 | 129900-77450 | BRUSH | 2 | | | | | | | |
| 8 | 4 | 171008-77450 | SCREW, CORE SET | 4 | | | | | | | |
| 9 | 2 | 129900-77150 | COVER | 1 | | | | | | | |
| 10 | 2 | 129900-77160 | HOLDER ASSY, BRUSH | 1 | | | | | | | |
| 11 | 3 | X2130631300 | SPRING, BRUSH | 4 | | | | | | | |
| 12 | 3 | 129900-77450 | BRUSH | 2 | | | | | | | |
| 13 | 2 | 129900-77170 | CLUTCH ASSY | 1 | | | | | | | |
| 14 | 3 | 129900-77180 | CLUTCH ASSY | 1 | | | | | | | |
| 15 | 4 | 129900-77190 | BEARING, BALL | 1 | | | | | | | |
| 16 | 4 | X2114955020 | BEARING, BALL | 1 | | | | | | | |
| 17 | 3 | 129900-77270 | SHAFT, PINION | 1 | | | | | | | |
| 18 | 3 | 171008-77670 | STOPPER SET, PINION | 1 | | | | | | | |
| 22 | 2 | 129900-77280 | SWITCH ASSY, MAGNET | 1 | | | | | | | |
| 23 | 2 | 129900-77290 | CASE, GEAR | 1 | | | | | | | |
| 24 | 2 | 129900-77380 | RETAINER, BEARING | 1 | | | | | | | |
| 25 | 2 | 129900-77390 | LEVER ASSY, SHIFT | 1 | | | | | | | |
| 26 | 2 | 129900-77420 | COVER KIT, DUST | 1 | | | | | | | |
| 27 | 2 | 129900-77430 | SCREW, M4X10 | 2 | | | | | | | |
| 28 | 2 | 129685-77640 | BOLT, THROUGH | 2 | | | | | | | |
| 29 | 2 | 171008-77750 | COVER, TERMINAL | 1 | | | | | | | |
| 30 | 1 | 26116-120302 | BOLT, M12X 30 PLATED | 2 | | | | | | | |

N:Old ←Yes/No→ New. Q:Old ←No/Yes→ New. R:Old ←Yes/Yes→ New. S:Old ←No/No→ New. W:Add. Z:Discontinued. F:Interchangeable by set. K:Q'ty Change

Copyright (C) YANMAR GLOBAL CS CO., LTD. All RightsReserved.

# Fig.18. GENERATOR

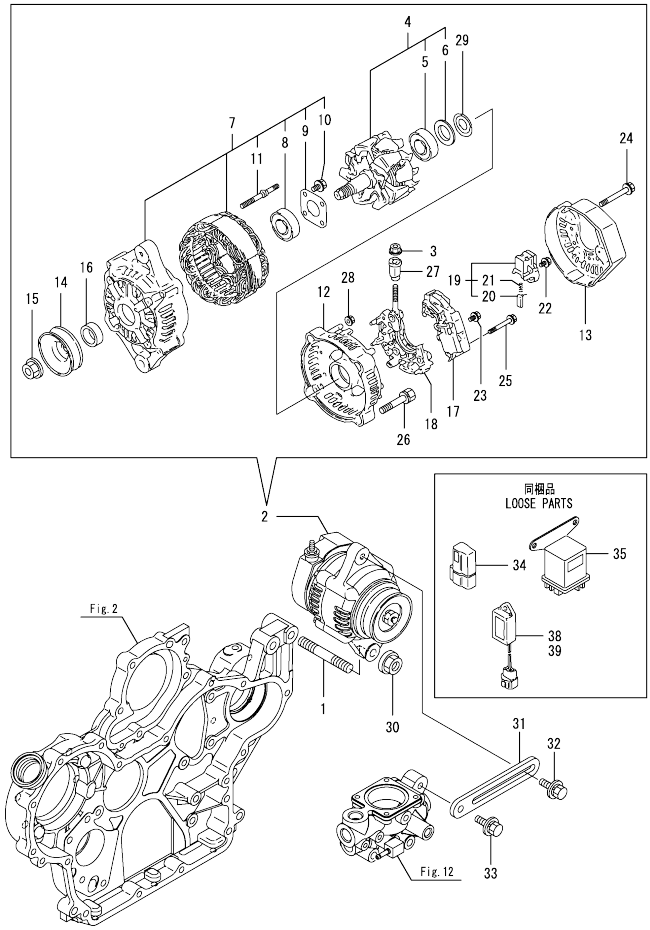




(A)=4TNV98T-GPGEC (D)=
(B)= (E)=
(C)= (F)=

| No. | Lev. | Parts No. | Description | Q'ty (A) | (B) | (C) | (D) | (E) | (F) | I | R |
|---|---|---|---|---|---|---|---|---|---|---|---|
| 1 | 1 | 129795-01900 | BOLT, STUD M10X33 | 1 | | | | | | | |
| 2 | 1 | 129423-77200 | GENERATOR ASSY, 40A | 1 | | | | | | | |
| 3 | 2 | X9490561001 | NUT | 1 | | | | | | | |
| 4 | 2 | 119620-77380 | ROTOR ASSY | 1 | | | | | | | |
| 5 | 3 | 123501-79240 | BEARING, BALL | 1 | | | | | | | |
| 6 | 3 | 119620-79250 | COVER, BEARING | 1 | | | | | | | |
| 7 | 2 | 119620-77421 | FRAME ASSY,GENERATOR | 1 | | | | | | | |
| 8 | 3 | 119620-79200 | BEARING, BALL | 1 | | | | | | | |
| 9 | 3 | 119620-79210 | RETAINER | 1 | | | | | | | |
| 10 | 3 | 119620-79220 | SCREW | 4 | | | | | | | |
| 11 | 3 | 119620-79230 | BOLT, STUD | 2 | | | | | | | |
| 12 | 2 | 119620-77440 | FRAME ASSY | 1 | | | | | | | |
| 13 | 2 | 129423-77450 | COVER | 1 | | | | | | | |
| 14 | 2 | 119620-77461 | PULLEY, GENERATOR | 1 | | | | | | | |
| 15 | 2 | 119620-77471 | NUT | 1 | | | | | | | |
| 16 | 2 | 119620-77490 | COLLAR | 1 | | | | | | | |
| 17 | 2 | 129423-77710 | REGULATOR ASSY | 1 | | | | | | | |
| 18 | 2 | 119620-79260 | HOLDER | 1 | | | | | | | |
| 19 | 2 | 129052-79270 | HOLDER, BRUSH | 1 | | | | | | | |
| 20 | 3 | 119620-77480 | BRUSH | 2 | | | | | | | |
| 21 | 3 | 119620-79280 | SPRING | 2 | | | | | | | |
| 22 | 2 | 119620-79290 | SCREW | 6 | | | | | | | |
| 23 | 2 | 119620-79300 | SCREW | 1 | | | | | | | |
| 24 | 2 | 119620-79310 | BOLT | 3 | | | | | | | |
| 25 | 2 | 119620-79320 | SCREW | 2 | | | | | | | |
| 26 | 2 | 119620-79330 | BOLT | 2 | | | | | | | |
| 27 | 2 | 119620-79340 | BUSH, INSULATION | 1 | | | | | | | |
| 28 | 2 | 119620-79350 | NUT | 2 | | | | | | | |
| 29 | 2 | 119620-79360 | WASHER, THRUST | 1 | | | | | | | |
| 30 | 1 | 26306-100002 | NUT, M10 | 1 | | | | | | | |
| 31 | 1 | 129900-77330 | ADJUSTER, BELT | 1 | | | | | | | |
| 32 | 1 | 119810-77340 | BOLT, ADJUST L=30 | 1 | | | | | | | |
| 33 | 1 | 26014-080252 | BOLT, M8X 25 | 1 | | | | | | | |
| 34 | 1 | 119643-66900 | DIODE | 1 | | | | | | | |
| 35 | 1 | 119650-77910 | RELAY ASSY, GLOW | 1 | | | | | | | |
| 38 | 1 | 128300-77920 | TIMER | 1 | | | | | | | |
| 39 | 1 | 129211-77920 | TIMER | 1 | | | | | | | |

N:Old ←Yes/No→ New. Q:Old ←No/Yes→ New. R:Old ←Yes/Yes→ New. S:Old ←No/No→ New. W:Add. Z:Discontinued. F:Interchangeable by set. K:Q'ty Change

Copyright (C) YANMAR GLOBAL CS CO., LTD. All RightsReserved.

# Fig.19. GASKET SET



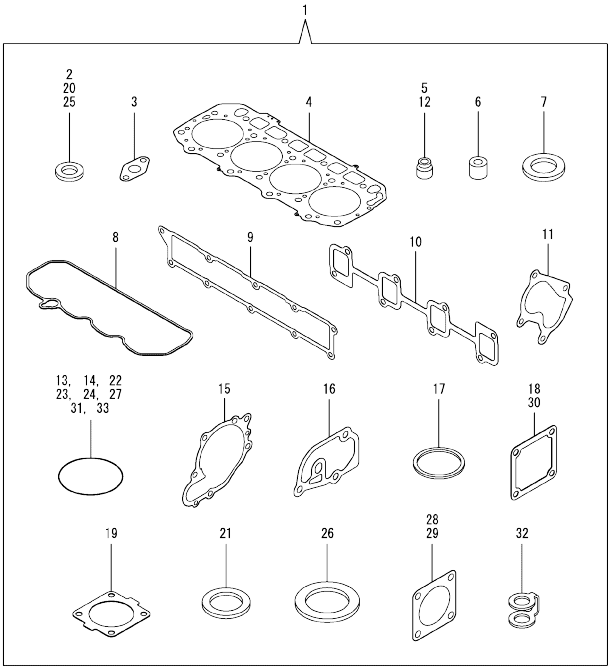


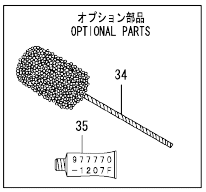


(A)=4TNV98T-GPGEC (D)=
(B)= (E)=
(C)= (F)=

| No. | Lev. | Parts No. | Description | Q'ty (A) | (B) | (C) | (D) | (E) | (F) | I | R |
|---|---|---|---|---|---|---|---|---|---|---|---|
| 1 | 1 | 729908-92620 | GASKET SET | 1 | | | | | | | 1 |
| 2 | 2 | 23414-100000 | GASKET, 10X1.0 | 2 | | | | | | | |
| 3 | 2 | 129908-39690 | GASKET | 1 | | | | | | | |
| 4 | 2 | 129907-01331 | GASKET, HEAD | 1 | | | | | | | |
| 5 | 2 | 124160-11340 | SEAL, VALVE STEM | 8 | | | | | | | |
| 6 | 2 | 119802-11870 | PROTECTOR, NOZZLE | 4 | | | | | | | |
| 7 | 2 | 119625-11880 | SEAT, NOZZLE | 4 | | | | | | | |
| 8 | 2 | 129933-11310 | GASKET, BONNET | 1 | | | | | | | |
| 9 | 2 | 129907-12110 | GASKET, MANIFOLD | 1 | | | | | | | |
| 10 | 2 | 129900-13251 | GASKET, EXH.MANIFOLD | 1 | | | | | | | |
| 11 | 2 | 123901-18080 | GASKET | 1 | | | | | | | |
| 12 | 2 | 119803-11340 | SEAL, VALVE STEM | 8 | | | | | | | |
| 13 | 2 | 129900-32030 | O-RING, P20 | 2 | | | | | | | |
| 14 | 2 | 129900-32040 | O-RING, P14 | 1 | | | | | | | |
| 15 | 2 | 129900-42020 | GASKET, WATER PUMP | 1 | | | | | | | |
| 16 | 2 | 129900-49870 | GASKET, THERMOSTAT | 1 | | | | | | | |
| 17 | 2 | 121850-49550 | GASKET, THERMOSTAT | 1 | | | | | | | |
| 18 | 2 | 121850-77021 | GASKET, AIR HEATER | 1 | | | | | | | |
| 19 | 2 | 121850-49540 | GASKET, THERMOSTAT | 1 | | | | | | | |
| 20 | 2 | 23414-080000 | GASKET, 8X1.0 | 1 | | | | | | | |
| 21 | 2 | 124465-44950 | GASKET, 16 | 2 | | | | | | | |
| 22 | 2 | 24311-000070 | O-RING, 1AP7.0 | 1 | | | | | | | |
| 23 | 2 | 24311-000120 | O-RING, 1AP12.0 | 8 | | | | | | | |
| 24 | 2 | 24311-000320 | O-RING, 1AP32.0 | 2 | | | | | | | |
| 25 | 2 | 22190-080002 | WASHER, SEAL 6 | 9 | | | | | | | |
| 26 | 2 | 22190-220002 | WASHER, SEAL 22 | 1 | | | | | | | |
| 27 | 2 | 24351-030750 | O-RING, 1A3075 | 1 | | | | | | | |
| 28 | 2 | 129472-18090 | GASKET | 1 | | | | | | | |
| 29 | 2 | 124240-01883 | GASKET | 1 | | | | | | | |
| 30 | 2 | 119129-77020 | GASKET | 1 | | | | | | | |
| 31 | 2 | 24321-000600 | O-RING, 1AG60.0 | 1 | | | | | | | |
| 32 | 2 | 123907-59550 | GASKET | 5 | | | | | | | |
| 33 | 2 | 24341-000240 | O-RING, 1AS24.0 | 1 | | | | | | | |
| 34 | 1 | 129400-92450 | HONE, FLEX | 1 | | | | | | | 1 |
| 35 | 1 | 977770-1207F | GASKET.LIQUID | 1 | | | | | | | 1 |

Remarks
(1) Optional parts.

N:Old ◄Yes/No► New. Q:Old ◄No/Yes► New. R:Old ◄Yes/Yes► New. S:Old ◄No/No► New. W:Add. Z:Discontinued. F:Interchangeable by set. K:Q'ty Change

Copyright (C) YANMAR GLOBAL CS CO., LTD. All RightsReserved.

# Parts No. Index

| Parts No. | Fig. No. | Ref. No. |
|---|---|---|
| 105010-39140 | 11 | 7 |
| 105025-59750 | 16 | 7 |
| 106500-44810 | 11 | 29 |
| 114250-39450 | 11 | 1 |
| 114250-53080 | 15 | 5 |
| 114250-53120 | 15 | 9 |
| 114250-53130 | 15 | 10 |
| 114250-53140 | 15 | 11 |
| 114250-53210 | 15 | 12 |
| 119000-01840 | 3 | 3 |
| 119000-39650 | 11 | 38 |
| 119005-35151 | 10 | 26 |
| 119005-77051 | 5 | 10 |
| 119006-03090 | 4 | 63 |
| 119100-11330 | 4 | 56 |
| 119129-77020 | 5 | 8 |
| | 19 | 30 |
| 119130-44760 | 12 | 17 |
| 119131-18320 | 8 | 3 |
| 119160-12530 | 5 | 17 |
| 119160-12540 | 5 | 18 |
| 119160-12570 | 5 | 15 |
| 119225-52102 | 16 | 21 |
| 119255-44660 | 12 | 56 |
| 119305-59120 | 15 | 42 |
| 119593-11301 | 4 | 29 |
| 119620-11180 | 4 | 14 |
| 119620-77380 | 18 | 4 |
| 119620-77421 | 18 | 7 |
| 119620-77440 | 18 | 12 |
| 119620-77461 | 18 | 14 |
| 119620-77471 | 18 | 15 |
| 119620-77480 | 18 | 20 |
| 119620-77490 | 18 | 16 |
| 119620-79200 | 18 | 8 |
| 119620-79210 | 18 | 9 |
| 119620-79220 | 18 | 10 |
| 119620-79230 | 18 | 11 |
| 119620-79250 | 18 | 6 |
| 119620-79260 | 18 | 18 |
| 119620-79280 | 18 | 21 |
| 119620-79290 | 18 | 22 |
| 119620-79300 | 18 | 23 |
| 119620-79310 | 18 | 24 |
| 119620-79320 | 18 | 25 |
| 119620-79330 | 18 | 26 |
| 119620-79340 | 18 | 27 |
| 119620-79350 | 18 | 28 |
| 119620-79360 | 18 | 29 |
| 119625-11880 | 4 | 25 |

| Parts No. | Fig. No. | Ref. No. |
|---|---|---|
| 119625-11880 | 19 | 7 |
| 119640-01640 | 3 | 7 |
| 119643-66900 | 18 | 34 |
| 119650-77910 | 18 | 35 |
| 119653-77950 | 14 | 104 |
| 119660-61901 | 14 | 60 |
| 119802-11870 | 4 | 24 |
| | 19 | 6 |
| 119802-51590 | 13 | 64 |
| 119802-51600 | 13 | 65 |
| 119802-51680 | 13 | 69 |
| 119802-51690 | 13 | 70 |
| 119802-55700 | 16 | 22 |
| 119802-55710 | 16 | 24 |
| 119802-55730 | 16 | 25 |
| 119803-11340 | 4 | 15 |
| | 19 | 12 |
| 119803-53400 | 15 | 13 |
| 119807-61420 | 14 | 23 |
| 119810-77340 | 18 | 32 |
| 120130-22301 | 9 | 22 |
| 120445-44540 | 12 | 54 |
| 121250-44901 | 12 | 36 |
| 121252-39150 | 11 | 8 |
| 121450-42450 | 12 | 35 |
| 121520-34810 | 10 | 15 |
| 121750-59890 | 10 | 11 |
| | 16 | 12 |
| 121850-21130 | 9 | 10 |
| 121850-21290 | 9 | 4 |
| 121850-21920 | 9 | 5 |
| 121850-49540 | 12 | 23 |
| | 19 | 19 |
| 121850-49550 | 12 | 24 |
| | 19 | 17 |
| 121850-49810 | 12 | 26 |
| 121850-77021 | 5 | 9 |
| | 19 | 18 |
| 122780-59100 | 15 | 41 |
| 123501-79240 | 18 | 5 |
| 123900-13630 | 6 | 3 |
| 123900-25060 | 7 | 9 |
| 123901-03240 | 4 | 67 |
| 123901-03280 | 4 | 74 |
| 123901-18080 | 6 | 5 |
| | 19 | 11 |
| 123901-39820 | 11 | 28 |
| 123907-11280 | 4 | 34 |
| 123907-11550 | 4 | 1 |
| 123907-11601 | 15 | 40 |

| Parts No. | Fig. No. | Ref. No. |
|---|---|---|
| 123907-11820 | 4 | 21 |
| 123907-11830 | 4 | 20 |
| 123907-39500 | 11 | 14 |
| 123907-59540 | 16 | 14 |
| 123907-59550 | 16 | 15 |
| | 19 | 32 |
| 123907-59560 | 16 | 19 |
| 123910-39850 | 11 | 26 |
| 123910-49600 | 10 | 8 |
| 123910-49610 | 10 | 10 |
| 123912-33050 | 10 | 2 |
| 123912-33100 | 10 | 3 |
| 123951-18220 | 5 | 5 |
| 124070-13300 | 11 | 23 |
| 124160-01751 | 2 | 24 |
| | 4 | 49 |
| 124160-11340 | 4 | 16 |
| | 19 | 5 |
| 124160-11360 | 4 | 58 |
| 124223-39900 | 11 | 4 |
| 124240-01871 | 2 | 26 |
| 124240-01883 | 2 | 27 |
| | 19 | 29 |
| 124465-44950 | 12 | 37 |
| | | 38 |
| | 19 | 21 |
| 124722-59050 | 12 | 42 |
| | | 45 |
| | 16 | 17 |
| 124766-59050 | 16 | 5 |
| | | 9 |
| 126650-12680 | 5 | 19 |
| 127410-21480 | 9 | 13 |
| 128300-77920 | 18 | 38 |
| 129004-55612 | 16 | 1 |
| 129005-59830 | 11 | 16 |
| 129006-44480 | 10 | 5 |
| 129008-51920 | 13 | 12 |
| 129052-79270 | 18 | 19 |
| 129100-01580 | 2 | 5 |
| | 3 | 1 |
| 129100-55690 | 16 | 23 |
| 129107-44590 | 12 | 48 |
| 129150-02450 | 7 | 4 |
| 129150-03100 | 4 | 65 |
| 129150-11230 | 4 | 37 |
| | | 41 |
| 129150-11750 | 4 | 19 |
| | | 38 |
| | | 42 |

| Parts No. | Fig. No. | Ref. No. |
|---|---|---|
| 129150-14200 | 7 | 1 |
| 129150-25920 | 7 | 16 |
| 129150-59131 | 15 | 45 |
| | | 49 |
| 129150-91400 | 2 | 29 |
| 129155-51280 | 14 | 5 |
| 129155-61460 | 14 | 28 |
| 129198-59540 | 11 | 7 -1 |
| 129211-77920 | 18 | 39 |
| 129255-61410 | 14 | 22 |
| 129400-92450 | 19 | 34 |
| 129410-03990 | 4 | 75 |
| 129418-18320 | 6 | 4 |
| 129423-77200 | 18 | 2 |
| 129423-77450 | 18 | 13 |
| 129423-77710 | 18 | 17 |
| 129457-59010 | 16 | 4 |
| 129466-49300 | 10 | 7 |
| 129472-18090 | 8 | 2 |
| | 19 | 28 |
| 129486-59551 | 16 | 16 |
| 129508-44550 | 12 | 47 |
| 129509-51390 | 13 | 25 |
| 129550-59120 | 15 | 46 |
| 129612-12650 | 5 | 20 |
| 129685-77640 | 17 | 28 |
| 129795-01900 | 18 | 1 |
| 129900-01200 | 1 | 27 |
| 129900-01250 | 1 | 4 |
| 129900-02020 | 1 | 6 |
| 129900-02341 | 1 | 33 |
| 129900-02410 | 1 | 9 |
| 129900-02931 | 1 | 24 |
| 129900-02941 | 1 | 36 |
| 129900-13251 | 6 | 2 |
| | 19 | 10 |
| 129900-14100 | 7 | 6 |
| 129900-21200 | 9 | 3 |
| 129900-21640 | 9 | 8 |
| 129900-23001 | 9 | 24 |
| 129900-23200 | 9 | 27 |
| 129900-23601 | 9 | 28 |
| 129900-23611 | 9 | 31 |
| 129900-23911 | 9 | 30 |
| 129900-25100 | 7 | 10 |
| 129900-32030 | 2 | 11 |
| | 10 | 18 |
| | 19 | 13 |
| 129900-32040 | 2 | 12 |
| | 19 | 14 |

# Parts No. Index

| Parts No. | Fig. No. | Ref. No. |
|---|---|---|
| 129900-42020 | 12 | 11 |
| | 19 | 15 |
| 129900-42461 | 12 | 14 |
| 129900-49870 | 12 | 31 |
| | 19 | 16 |
| 129900-77040 | 17 | 1 |
| 129900-77120 | 17 | 2 |
| 129900-77130 | 17 | 5 |
| 129900-77140 | 17 | 6 |
| 129900-77150 | 17 | 9 |
| 129900-77160 | 17 | 10 |
| 129900-77170 | 17 | 13 |
| 129900-77180 | 17 | 14 |
| 129900-77190 | 17 | 15 |
| 129900-77270 | 17 | 17 |
| 129900-77280 | 17 | 22 |
| 129900-77290 | 17 | 23 |
| 129900-77330 | 18 | 31 |
| 129900-77380 | 17 | 24 |
| 129900-77390 | 17 | 25 |
| 129900-77420 | 17 | 26 |
| 129900-77430 | 17 | 27 |
| 129900-77450 | 17 | 7 |
| | | 12 |
| 129906-51580 | 13 | 62 |
| 129906-53000 | 15 | 2 |
| 129907-01190 | 1 | 29 |
| 129907-01331 | 1 | 28 |
| | 19 | 4 |
| 129907-01950 | 13 | 134 |
| 129907-01960 | 13 | 135 |
| 129907-03011 | 4 | 51 |
| 129907-03061 | 4 | 52 |
| 129907-03070 | 4 | 53 |
| 129907-07900 | 4 | 61 |
| 129907-11100 | 4 | 11 |
| 129907-11110 | 4 | 12 |
| 129907-11120 | 4 | 13 |
| 129907-11250 | 4 | 31 |
| 129907-11260 | 4 | 32 |
| 129907-11270 | 4 | 33 |
| 129907-11341 | 4 | 30 |
| 129907-11510 | 4 | 17 |
| 129907-11650 | 4 | 35 |
| 129907-11660 | 4 | 39 |
| 129907-11800 | 4 | 80 |
| 129907-11910 | 4 | 26 |
| 129907-11920 | 4 | 43 |
| 129907-11950 | 4 | 27 |
| 129907-12110 | 5 | 1 |

| Parts No. | Fig. No. | Ref. No. |
|---|---|---|
| 129907-12110 | 19 | 9 |
| 129907-14400 | 7 | 2 |
| 129907-21660 | 9 | 9 |
| 129907-22050 | 9 | 16 |
| 129907-25900 | 7 | 15 |
| 129907-39061 | 11 | 12 |
| 129907-42001 | 12 | 1 |
| 129907-44560 | 12 | 55 |
| 129907-44600 | 12 | 49 |
| 129907-44610 | 12 | 50 |
| 129907-49610 | 12 | 39 |
| 129907-49620 | 12 | 43 |
| 129907-49710 | 12 | 40 |
| 129907-49720 | 12 | 44 |
| 129907-49730 | 12 | 25 |
| 129907-49750 | 12 | 41 |
| 129907-49800 | 12 | 19 |
| 129907-51560 | 13 | 58 |
| 129907-55801 | 16 | 2 |
| 129907-59140 | 16 | 13 |
| 129907-59710 | 15 | 50 |
| 129908-01500 | 2 | 8 |
| 129908-03099 | 4 | 64 |
| 129908-03230 | 4 | 66 |
| 129908-03240 | 4 | 68 |
| 129908-03250 | 4 | 69 |
| 129908-11700 | 4 | 2 |
| 129908-14581 | 7 | 3 |
| 129908-21000 | 9 | 1 |
| 129908-22080 | 9 | 14 |
| 129908-32060 | 2 | 9 |
| 129908-33010 | 10 | 1 |
| 129908-33101 | 10 | 4 |
| 129908-39410 | 11 | 32 |
| 129908-39690 | 11 | 27 |
| | 19 | 3 |
| 129908-49060 | 10 | 6 |
| 129908-59810 | 15 | 52 |
| 129908-59820 | 15 | 53 |
| 129908-59830 | 15 | 54 |
| 129908-59840 | 15 | 55 |
| 129915-01610 | 3 | 2 |
| 129916-01790 | 3 | 5 |
| 129916-01800 | 2 | 4 |
| 129916-21610 | 9 | 7 |
| 129916-44740 | 12 | 16 |
| 129916-49530 | 12 | 22 |
| 129916-59020 | 13 | 132 |
| 129920-21580 | 9 | 11 |
| 129927-42140 | 2 | 12 A |

| Parts No. | Fig. No. | Ref. No. |
|---|---|---|
| 129928-51900 | 13 | 11 |
| 129933-11310 | 4 | 55 |
| | 19 | 8 |
| 129933-11320 | 4 | 50 |
| 129935-03260 | 4 | 71 |
| 129935-03270 | 4 | 72 |
| 129935-12070 | 5 | 13 |
| 129935-12520 | 5 | 16 |
| 129935-13100 | 6 | 1 |
| 129935-18010 | 8 | 1 |
| 129935-18350 | 5 | 7 |
| 129935-39040 | 11 | 2 |
| 129935-39610 | 11 | 24 |
| 129937-12500 | 5 | 14 |
| 129937-61440 | 14 | 25 |
| 129940-42320 | 12 | 15 |
| 129940-44500 | 12 | 46 |
| 129944-12110 | 5 | 2 |
| 129944-12620 | 5 | 21 |
| 129946-61061 | 14 | 89 |
| 129950-59221 | 16 | 10 |
| 129951-01740 | 2 | 6 |
| 129953-25300 | 7 | 14 |
| 129953-34830 | 10 | 16 |
| 129953-35000 | 10 | 19 |
| 129957-59120 | 16 | 6 |
| 129960-03990 | 4 | 76 |
| 129960-21930 | 9 | 39 |
| 129960-21940 | 9 | 8 -1 |
| 129980-59510 | 16 | 11 |
| 129981-49050 | 12 | 57 |
| 129981-49062 | 12 | 58 |
| 129981-59010 | 16 | 8 |
| 129982-01710 | 3 | 6 |
| 144626-51090 | 13 | 13 |
| 158552-51571 | 13 | 59 |
| 158552-51580 | 13 | 63 |
| 158552-51670 | 13 | 130 |
| 158552-51781 | 13 | 101 |
| 158552-52100 | 13 | 110 |
| 158552-52311 | 13 | 112 |
| 158552-52400 | 13 | 113 |
| 158552-52500 | 13 | 111 |
| 158552-61900 | 14 | 74 |
| 158553-51551 | 13 | 56 |
| 158553-51630 | 13 | 74 |
| 158553-51640 | 13 | 76 |
| 158553-51660 | 13 | 78 |
| 158553-51670 | 13 | 68 |
| 158553-51680 | 13 | 79 |

| Parts No. | Fig. No. | Ref. No. |
|---|---|---|
| 158553-51930 | 13 | 104 |
| 158557-51570 | 13 | 60 |
| 158560-51600 | 13 | 73 |
| 158560-61050 | 14 | 2 |
| 158560-61071 | 14 | 3 |
| 158560-61430 | 14 | 24 |
| 158563-51150 | 13 | 16 |
| 158563-51281 | 13 | 23 |
| | | 24 |
| 158563-51330 | 13 | 34 |
| 158600-51270 | 13 | 22 |
| 158601-51550 | 13 | 57 |
| 158601-51570 | 13 | 61 |
| 158601-51650 | 13 | 77 |
| 158601-51770 | 13 | 100 |
| 158601-51790 | 13 | 102 |
| 171008-77410 | 17 | 3 |
| 171008-77420 | 17 | 4 |
| 171008-77450 | 17 | 8 |
| 171008-77670 | 17 | 18 |
| 171008-77750 | 17 | 29 |
| 171051-01921 | 1 | 5 |
| 171056-49120 | 10 | 14 |
| 22190-080002 | 11 | 9 |
| | | 17 |
| | | 19 |
| | | 21 |
| | 16 | 20 |
| | 19 | 25 |
| 22190-120002 | 13 | 105 |
| | | 114 |
| | | 115 |
| 22190-160002 | 14 | 79 |
| 22190-180002 | 13 | 106 |
| | | 116 |
| 22190-220002 | 3 | 9 |
| | 19 | 26 |
| 22217-180000 | 13 | 117 |
| 22252-000300 | 9 | 23 |
| 22312-050140 | 13 | 118 |
| 22351-030010 | 11 | 39 |
| 22351-050010 | 13 | 119 |
| 22351-060012 | 1 | 11 |
| 22512-070140 | 7 | 7 |
| | 9 | 6 |
| 22857-500100 | 4 | 57 |
| 23000-022000 | 4 | 77 |
| 23000-025000 | 10 | 12 |
| | 11 | 30 |
| 23000-054000 | 5 | 6 |

# Parts No. Index

| Parts No. | Fig. No. | Ref. No. |
|---|---|---|
| 23000-060000 | 12 | 59 |
| 23000-102000 | 5 | 22 |
| 23414-080000 | 12 | 32 |
| | 19 | 20 |
| 23414-100000 | 11 | 10 |
| | 19 | 2 |
| 23857-030000 | 11 | 18 |
| 23857-060000 | 13 | 120 |
| 23875-030000 | 12 | 28 |
| 23876-020000 | 4 | 8 |
| 23876-030000 | 1 | 12 |
| | | 13 |
| | | 14 |
| | 4 | 9 |
| 23887-160002 | 14 | 82 |
| 24311-000070 | 2 | 13 |
| | 13 | 121 |
| | 19 | 22 |
| 24311-000120 | 4 | 28 |
| | | 59 |
| | 19 | 23 |
| 24311-000160 | 16 | 26 |
| 24311-000320 | 2 | 25 |
| | 4 | 60 |
| | 19 | 24 |
| 24321-000600 | 10 | 13 |
| | 19 | 31 |
| 24321-000650 | 16 | 27 |
| 24341-000240 | 2 | 31 |
| | 19 | 33 |
| 24351-030750 | 2 | 14 |
| | 19 | 27 |
| 24356-190200 | 13 | 71 |
| | | 122 |
| 24356-240210 | 13 | 123 |
| 24372-000150 | 13 | 72 |
| 26014-060122 | 12 | 51 |
| 26014-080252 | 18 | 33 |
| 26106-060102 | 13 | 124 |
| | 14 | 64 |
| | | 65 |
| 26106-060122 | 12 | 29 |
| 26106-060142 | 14 | 83 |
| 26106-060162 | 2 | 32 |
| | 11 | 31 |
| | 15 | 56 |
| 26106-060202 | 12 | 30 |
| 26106-060252 | 14 | 84 |
| 26106-060302 | 12 | 12 |
| 26106-060352 | 13 | 125 |

| Parts No. | Fig. No. | Ref. No. |
|---|---|---|
| 26106-060402 | 14 | 85 |
| 26106-080122 | 3 | 10 |
| | 4 | 78 |
| | 10 | 24 |
| | 11 | 11 |
| | | 20 |
| | | 22 |
| | 12 | 33 |
| 26106-080142 | 4 | 79 |
| 26106-080162 | 2 | 15 |
| | | 28 |
| | 4 | 62 |
| | 7 | 8 |
| | 10 | 25 |
| | 13 | 136 |
| 26106-080182 | 15 | 57 |
| 26106-080202 | 2 | 16 |
| | | 17 |
| 26106-080222 | 13 | 137 |
| | | 138 |
| 26106-080302 | 12 | 18 |
| | 16 | 3 |
| 26106-080402 | 2 | 18 |
| | 4 | 45 |
| 26106-080452 | 2 | 19 |
| | | 20 |
| | 5 | 3 |
| 26106-080552 | 7 | 13 |
| | 12 | 13 |
| 26106-080602 | 4 | 46 |
| | | 47 |
| | 12 | 34 |
| 26106-080702 | 2 | 21 |
| | 5 | 11 |
| 26106-080752 | 2 | 22 |
| 26106-080802 | 5 | 4 |
| 26106-080902 | 5 | 12 |
| 26106-100202 | 13 | 139 |
| 26116-050102 | 4 | 70 |
| 26116-120302 | 17 | 30 |
| 26206-100352 | 3 | 4 |
| 26216-100302 | 2 | 10 |
| 26226-080222 | 4 | 44 |
| 26306-080002 | 4 | 48 |
| | 8 | 4 |
| 26306-100002 | 2 | 23 |
| | 18 | 30 |
| 26450-100452 | 13 | 126 |
| 26756-060002 | 14 | 66 |
| 26776-180002 | 13 | 127 |

| Parts No. | Fig. No. | Ref. No. |
|---|---|---|
| 27241-300000 | 1 | 10 |
| 27241-400000 | 4 | 10 |
| 27310-070001 | 4 | 22 |
| 720445-44200 | 12 | 52 |
| 729900-02801 | 1 | 30 |
| 729906-53100 | 15 | 1 |
| 729907-01580 | 2 | 1 |
| 729907-22950 | 9 | 35 |
| 729908-01560 | 1 | 1 |
| 729908-22900 | 9 | 33 |
| 729908-92620 | 19 | 1 |
| 729937-51390 | 13 | 1 |
| 977770-1207F | 19 | 35 |
| X2114955020 | 17 | 16 |
| X2130631300 | 17 | 11 |
| X9490561001 | 18 | 3 |

| Parts No. | Fig. No. | Ref. No. |
|---|---|---|