YANMAR

PARTS CATALOG

0CR10-M22401EN

Last update Aug., 2014

P R E F A C E

1. This Parts Catalog carries all parts incorporated in YANMAR Model 3TN66E—S, 3TNA72E—S, 3TN66E—G2, & 3TNA72E—G2, engine manufactured since October 1985.

2. Each illustration corresponds to the parts list on the following page.

3. When ordering parts, clearly write down the engine model and serial number, as well as the name and number of each part in your order sheet. This will help insure reliable delivery of the parts you have ordered.

4. Pub. No. 000Y00R2240 First Published : November, 1985.

Pub. No. 000Y00R2241 First Revised : November, 1991.

Directions for the Parts Catalog.

1.This Parts Catalog shows both standard and optional parts.
2.Parts may change without prior notice.
3.The following is an example of the Parts Catalog format.

0CF10-G21601 29. FUEL INJECTION PUMP(W/BOOST)

(A)=4JH-DT
(B)=4JH-DTZ
(C)=4JH-DTZP
(D)=4JH-DTZA
(E)=4JH-DTZY
(F)=

① REF.	② LEV.	PARTS NO.	DESCRIPTION	Q'TY (A)	(B)	(C)	(D)	(E)	(F)	③ I	⑤ R
1	1	729595-51390	FUEL INJECTION PUMP	1	1	1	1	1			1
1-1	1	729595-51391	FUEL INJECTION PUMP	1	1	1	1	1		N	1
	(A=E00185)	(B=E00200)									
3	2	26022-060162	SCREW M 6X 16	9	9	9	9	9			
3-1 ④	2	26022-060162	SCREW M 6X 16	4	4	4	4	4		K	
	(A=E00156)	(B=E00156)	(C=E00156) (D=E00156)	(E=E00156)							
4	2	129470-51040	CAMSHAFT	1	1	1	1	1			
5	2	122710-51050	BEARING, ROLLER	2	2	2	2	2			
6	2	129470-51060	RETAINER	1	1	1	1	1			

Remarks
(1) BOOST COMPEMSATOR TYPE. OPTIONAL PART, TO E00155,(4JH-DT, 4JH-DTZ

①Ref. No.

The Ref. No. listed may not be in accordance with the illustration Ref. No.

(Ex.) Illustration No. 1 List Ref No. 1 (Before change) → 1- 1 (After change)

For interchangeable symbols N, R and K, illustrations for new parts may be abbreviated.

②Lev. (Level)

Level indication
The numbers below indicate the level of relativity towards the main part.
1 ----- Main parts (Assembly parts)
2 ----- Sub component included in " 1 ".
3 ----- Sub component included in " 2 ".
Note) Parts that are not for sale are partially illustrated but not listed.

③Interchangeability Symbol

When a part change takes place, one of the following interchangeability symbols is indicated beside the part.

Symbol	Interchangeability	Contents note
N	Old ← Yes / No → New	New Part is interchangeable for Old Part but Old Part is not interchangeable for New Part.
Q	Old ← No / Yes → New	New Part is not interchangeable for Old Part but Old Part is interchangeable for New Part.
R	Old ← Yes / Yes → New	New/ Old Parts are both interchangeable.
S	Old ← No / No → New	New/ Old Parts are both not interchangeable.
W		Part newly added.
Z		Part discontinued.
F		Not interchangeable by a single part but interchangeable together with related parts.
K		Changes only for used parts quantities.

④Effective Machine No.

When a part changes, the effective Machine No. will be indicated in the (A)-(F) column.

Product Symbol	Product No.	Product Symbol	Product No.
C	Clutch No. Compressor No.	F	Machine No. (Agricultural Equip.)
D	Drive No.	M	Machine No.
E	Engine No.		

Note 1) A date may follow the symbol. (Ex.) 1996.01
Note 2) " XXXXX " and " ZZZZZ " are for parts that could not be predicted or for engine models that could not be identified.
Note 3) (A=E00185) is the E (Engine Serial Number) for the column (A) model (in this case 4JH-DT) after the parts design change.

⑤Remarks

Figures or alphabets (symbols) are entered in the remarks column.
The comments (remarks) on parts that are indicated at the bottom of the illustration are the same symbols as those stated above.

Contents

Fig. No.	Fig. Name
ENGINE	
1.	CYLINDER BLOCK
2.	CYLINDER BLOCK
3.	GEAR HOUSING
4.	GEAR HOUSING
5.	FLYWHEEL HOUSING
6.	LUBRICATING OIL SUMP
7.	LUBRICATING OIL SUMP
8.	LABEL
9.	ENGINE LIFTER & FOOT BRACKET
10.	CYLINDER HEAD
11.	CYLINDER HEAD
12.	ROCKER ARM
13.	ROCKER ARM
14.	BONNET
15.	BONNET
16.	AIR CLEANER
17.	INTAKE MANIFOLD
18.	SILENCER
19.	EXHAUST MANIFOLD
20.	EXHAUST MANIFOLD
21.	CAMSHAFT
22.	CAMSHAFT & FUEL I. CAMSHAFT
23.	CRANKSHAFT
24.	PISTON
25.	IDLE GEAR
26.	LUBRICATING OIL PUMP
27.	DIPSTICK
28.	LUBRICATING OIL FILTER
29.	LUBRICATING OIL FILTER
30.	LUBRICATING OIL INTAKE PIPE
31.	COOLING WATER PUMP
32.	COOLING WATER PUMP
33.	RADIATOR & COOLING FAN
34.	RADIATOR & COOLING FAN
35.	THERMOSTAT
36.	COOLING WATER DRAIN
37.	FUEL INJECTION PUMP
38.	FUEL INJECTION VALVE
39.	FUEL FILTER
40.	FUEL INJECTION PIPE
41.	FUEL LINE
42.	FUEL LINE
43.	FUEL RETURN PIPE
44.	GOVERNOR
45.	ENGINE CONTROL DEVICE
46.	ENGINE CONTROL LINK
47.	STARTER
48.	STARTER
49.	GENERATOR

Contents

Fig. No.	Fig. Name
50.	GENERATOR(3TN66E-S:E/#19166--)
51.	INSTRUMENT PANEL
52.	GASKET SET

Fig. No.	Fig. Name

Fig.1. CYLINDER BLOCK

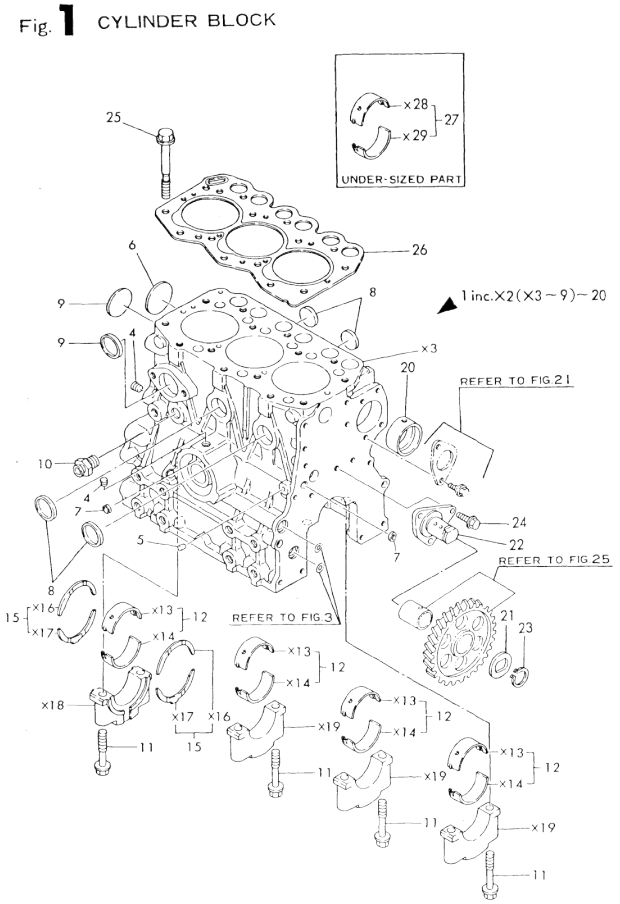

Remarks
(1) UNDER-SIZED PART.

(A)=3TN66E-S (D)=3TNA72E-G2
(B)=3TNA72E-S (E)=
(C)=3TN66E-G2 (F)=

No.	Lev.	Parts No.	Description	Q'ty (A)	(B)	(C)	(D)	(E)	(F)	I	R
1	1	719288-01560	BLOCK ASSY, CYLINDER	1		1					
4	3	124060-01050	PLUG, PT1/8	2		2					
5	3	27221-060100	PLUG, 6X10	1		1					
6	3	27231-400000	PLUG 40	1		1					
7	3	27241-100000	PLUG, 10	2		2					
8	3	27241-250000	PLUG, 25	4		4					
9	3	27241-300000	PLUG 30	2		2					
10	2	121550-49111	JOINT, PT1/4	1		1					
11	2	119260-02020	BOLT, METAL CAP	8		8					
12	2	719260-02800	BEARING, MAIN	4		4					
15	2	719260-02930	BEARING, THRUST	2		2					
20	2	119260-02410	BUSH, CAMSHAFT	1		1					
21	1	119660-25022	RETAINER	1		1					
22	1	119660-25052	SHAFT, IDLE	1		1					
23	1	22242-000200	RING, 20	1		1					
24	1	26106-060122	BOLT, M6X 12 PLATED	3		3					
25	1	119260-01200	BOLT, HEAD	14		14					
26	1	119225-01340	GASKET, HEAD	1		1					
27	1	719260-02870	BEARING, 0.25 US	1		1					1

N:Old ←Yes/No→ New. Q:Old ←No/Yes→ New. R:Old ←Yes/Yes→ New. S:Old ←No/No→ New. W:Add. Z:Discontinued. F:Interchangeable by set. K:Q'ty Change

Copyright (C) YANMAR CO., LTD. All RightsReserved.

Fig.2. CYLINDER BLOCK

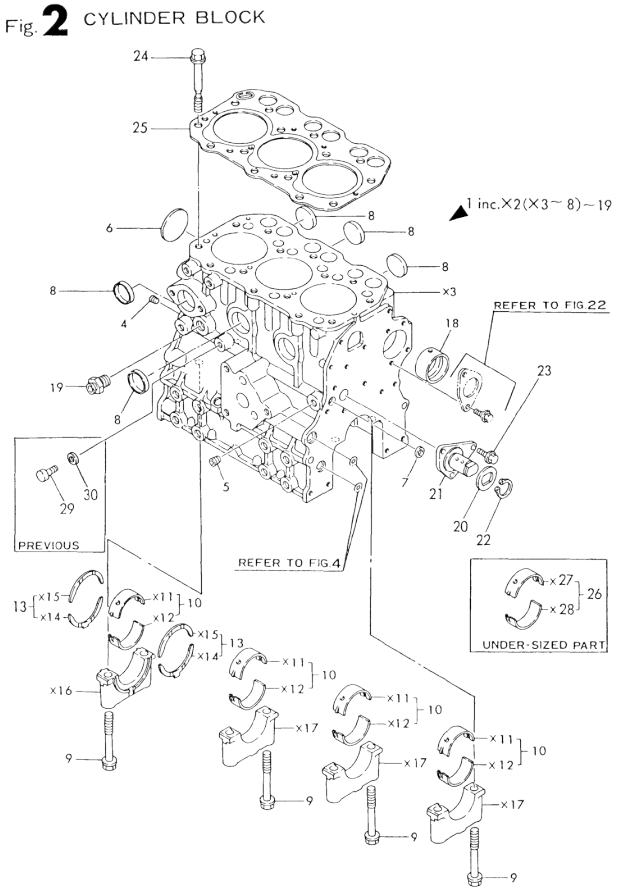

Remarks
(1) UNDER-SIZED PART.

(A)=3TN66E-S (D)=3TNA72E-G2
(B)=3TNA72E-S (E)=
(C)=3TN66E-G2 (F)=

No.	Lev.	Parts No.	Description	Q'ty (A)	(B)	(C)	(D)	(E)	(F)	I	R
1	1	719610-01560	BLOCK ASSY, CYLINDER		1		1				
4	3	124160-01910	PLUG, PT1/4		1		1				
4-1	3	119600-01050	PLUG, PT1/4		1		1				R
		(B=E17007)	(D=E17064)								
5	3	23871-010000	PLUG, R01		1		1				
6	3	27231-450000	PLUG 45		1		1				
7	3	27241-120000	PLUG, 12		1		1				
8	3	27241-300000	PLUG 30		6		6				
9	2	119620-02020	BOLT, METAL CAP		8		8				
10	2	719620-02800	BEARING, MAIN		4		4				
13	2	719620-02930	BEARING, THRUST		2		2				
18	2	119620-02410	BUSH, CAMSHAFT		1		1				
19	2	121550-49111	JOINT, PT1/4		1		1				
20	1	119660-25022	RETAINER		1		1				
21	1	119660-25052	SHAFT, IDLE		1		1				
22	1	22242-000200	RING, 20		1		1				
23	1	26106-060122	BOLT, M6X 12 PLATED		3		3				
24	1	119620-01200	BOLT, HEAD		14		14				
25	1	119620-01340	GASKET, HEAD		1		1				
25-1	1	119610-01340	GASKET, HEAD		1		1			N	
		(B=E01606)	(D=E01486)								
26	1	719620-02870	BEARING, 0.25 US		1		1				1
29	1	119656-01900	PLUG, 8		1		1			Z	
		(B=EXXX)	(D=EXXX)								
30	1	104884-59170	GASKET		1		1			Z	
		(B=EXXX)	(D=EXXX)								

N:Old $\xleftarrow[\text{No}]{\text{Yes}}$ New. Q:Old $\xleftarrow[\text{Yes}]{\text{No}}$ New. R:Old $\xleftarrow[\text{Yes}]{\text{Yes}}$ New. S:Old $\xleftarrow[\text{No}]{\text{No}}$ New. W:Add. Z:Discontinued. F:Interchangeable by set. K:Q'ty Change

Copyright (C) YANMAR CO., LTD. All RightsReserved.

Fig.3. GEAR HOUSING

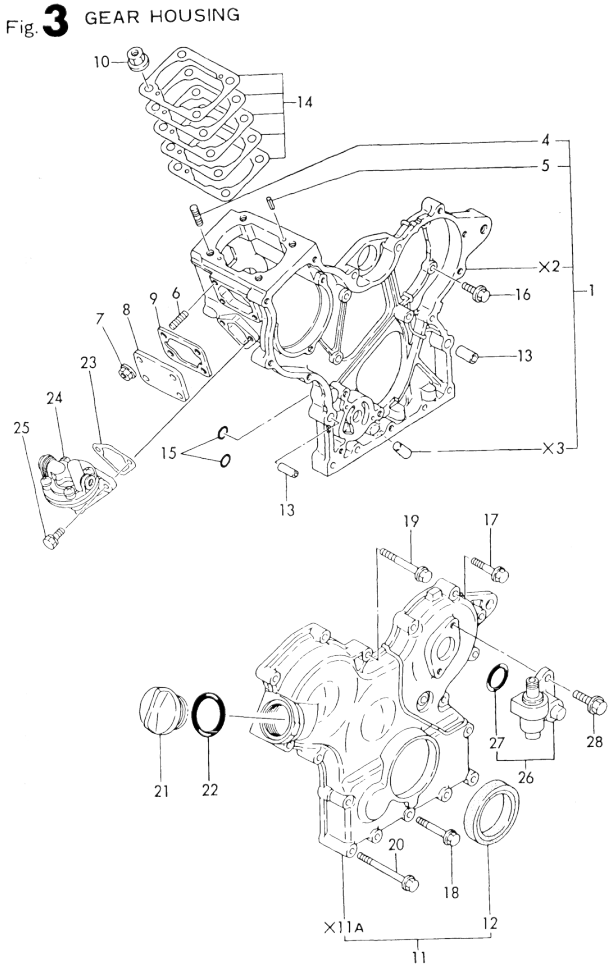

(A)=3TN66E-S (D)=3TNA72E-G2
(B)=3TNA72E-S (E)=
(C)=3TN66E-G2 (F)=

No.	Lev.	Parts No.	Description	Q'ty (A)	(B)	(C)	(D)	(E)	(F)	I	R
1	1	719370-01610	CASE ASSY, GEAR	1		1					
1-1	1	119260-01490	CASE ASSY, GEAR	1		1				N	
	(A=E14053)		(C=E13198)								
4	2	121450-01560	STUD, M8X22	4		4					
5	2	22351-040010	PIN, SPRING 4.0X10	2		2					
6	1	119660-01570	STUD, M6X12	4		4					
7	1	26366-060002	NUT, M6	4		4					
8	1	119660-01551	COVER	1		1					
9	1	119660-01561	GASKET	1		1					
9-1	1	119660-01562	GASKET	1		1				N	
	(A=EXXX)		(C=EXXX)								
10	1	194990-22050	NUT, M8	4		4					
11	1	119260-01590	COVER ASSY,GEAR CASE	1		1				W	
	(A=E25453)		(C=E25052)								
12	2	119620-01800	SEAL, OIL	1		1					
13	1	119660-01911	PIPE, KNOCK	4		4					
14	1	119620-01950	SHIM SET, ADJUSTING	1		1					
15	1	24311-000120	O-RING, 1AP12.0	2		2					
16	1	26106-060162	BOLT, M6X 16 PLATED	5		5					
17	1	26106-060302	BOLT, M6X 30 PLATED	5		5					
18	1	26106-060402	BOLT, M6X 40 PLATED	3		3					
19	1	26106-060502	BOLT, M6X 50 PLATED	4		4					
20	1	26106-060652	BOLT, M6X 65 PLATED	6		6					
21	1	124160-01751	COVER, FILLER	1		1					
22	1	121420-01760	O-RING	1		1					
22-1	1	24311-000320	O-RING, 1AP32.0	1		1				N	
	(A=E17057)		(C=E16975)								
23	1	121520-01850	GASKET	1		1					
23-1	1	121520-01851	GASKET	1		1				R	
	(A=E23030)		(C=E23602)								
24	1	119600-52021	PUMP ASSY, FUEL FEED	1		1					
25	1	26014-060202	BOLT, M6X 20	2		2					
26	1	129150-91400	GEAR	1	1	1	1				
27	2	24311-000260	O-RING, 1AP26.0	1	1	1	1				
27-1	2	24341-000240	O-RING, 1AS24.0	1	1	1	1			N	
	(A=E02137)	(B=E01154)	(C=E03973) (D=E01486)								
28	1	26106-060162	BOLT, M6X 16 PLATED	2	2	2	2				

N:Old ←Yes/No→ New. Q:Old ←No/Yes→ New. R:Old ←Yes/Yes→ New. S:Old ←No/No→ New. W:Add. Z:Discontinued. F:Interchangeable by set. K:Q'ty Change

Copyright (C) YANMAR CO., LTD. All RightsReserved.

Fig.4. GEAR HOUSING

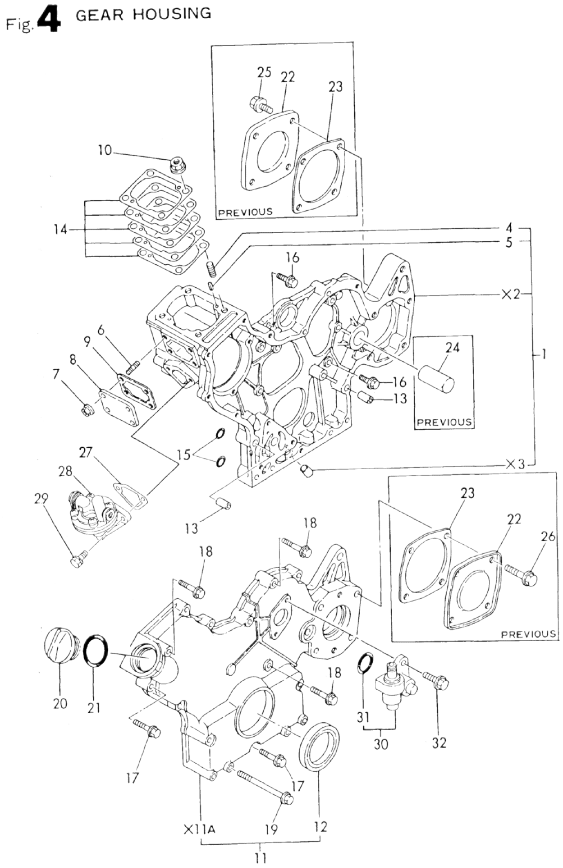

Remarks
(1) SIMULTANEOUS REPLACEMENT OF REF. NO.1-1,11-1 & 17-1 ARE INTERCHANGEABLE.

(A)=3TN66E-S (B)=3TNA72E-S (C)=3TN66E-G2 (D)=3TNA72E-G2 (E)= (F)=

No.	Lev.	Parts No.	Description	Q'ty (A)	(B)	(C)	(D)	(E)	(F)	I	R
1	1	119600-01501	CASE ASSY, GEAR		1		1				
1-1	1	119610-01490	CASE ASSY, GEAR		1		1			F	1
		(B=E22675)	(D=E21965)								
4	2	121450-01560	STUD, M8X22		4		4				
5	2	22351-040010	PIN, SPRING 4.0X10		2		2				
6	1	26216-060162	STUD, M6X 16		4		4				
7	1	26366-060002	NUT, M6		4		4				
8	1	119660-01551	COVER		1		1				
9	1	119660-01561	GASKET		1		1				
9-1	1	119660-01562	GASKET		1		1			N	
		(B=EXXX)	(D=EXXX)								
10	1	194990-22050	NUT, M8		4		4				
11	1	119610-01590	COVER ASSY,GEAR CASE		1		1			W	
		(B=E43621)	(D=E37751)								
12	2	119620-01800	SEAL, OIL		1		1				
13	1	119660-01911	PIPE, KNOCK		4		4				
14	1	119620-01950	SHIM SET, ADJUSTING		1		1				
15	1	24311-000120	O-RING, 1AP12.0		2		2				
16	1	26106-060162	BOLT, M6X 16 PLATED		7		7				
17	1	26106-060302	BOLT, M6X 30 PLATED		6		6				
17-1	1	26106-060302	BOLT, M6X 30 PLATED		8		8			F	1
		(B=E22675)	(D=E21965)								
18	1	26106-060602	BOLT, M6X 60 PLATED		4		4				
19	1	26106-060802	BOLT, M6X 80 PLATED		6		6				
20	1	124160-01751	COVER, FILLER		1		1				
21	1	121420-01760	O-RING		1		1				
21-1	1	24311-000320	O-RING, 1AP32.0		1		1			N	
		(B=E22675)	(D=E21965)								
22	1	124240-01871	COVER		2		2			Z	
		(B=E22675)	(D=E21965)								
23	1	124240-01882	GASKET		2		2			Z	
		(B=E22675)	(D=E21965)								
24	1	119621-26140	PLUG		1		1			Z	
		(B=E22675)	(D=E21965)								
25	1	26106-080122	BOLT, M8X 12 PLATED		4		4			Z	
		(B=E22675)	(D=E21965)								
26	1	26106-080402	BOLT, M8X 40 PLATED		4		4			Z	
		(B=E22675)	(D=E21965)								
27	1	121520-01850	GASKET		1		1				
27-1	1	121520-01851	GASKET		1		1			R	
		(B=E43621)	(D=E37750)								
28	1	119600-52021	PUMP ASSY, FUEL FEED		1		1				
29	1	26014-060202	BOLT, M6X 20		2		2				
30	1	129150-91400	GEAR		1		1				
31	2	24311-000260	O-RING, 1AP26.0		1		1				
31-1	2	24341-000240	O-RING, 1AS24.0		1		1			N	
		(B=E01154)	(D=E01486)								
32	1	26106-060162	BOLT, M6X 16 PLATED		2		2				

N:Old ←Yes/No→ New. Q:Old ←No/Yes→ New. R:Old ←Yes/Yes→ New. S:Old ←No/No→ New. W:Add. Z:Discontinued. F:Interchangeable by set. K:Q'ty Change

Copyright (C) YANMAR CO., LTD. All RightsReserved.

Fig.5. FLYWHEEL HOUSING

Fig. **5** FLYWHEEL HOUSING

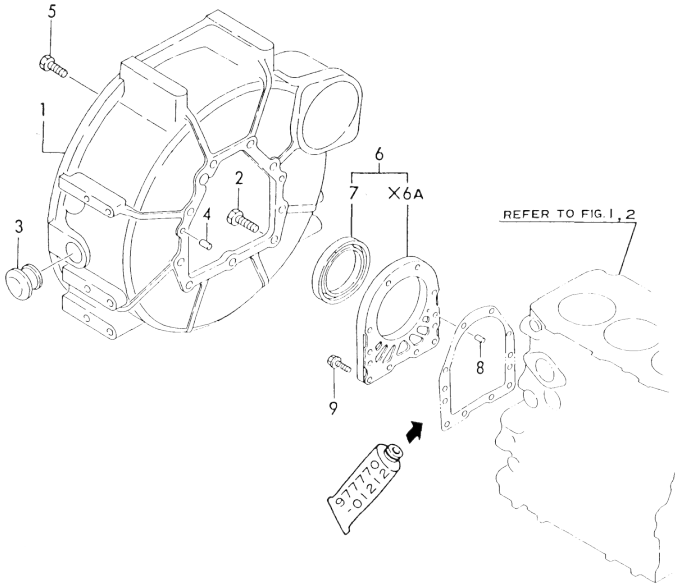

(A)=3TN66E-S
(B)=3TNA72E-S
(C)=3TN66E-G2
(D)=3TNA72E-G2
(E)=
(F)=

No.	Lev.	Parts No.	Description	Q'ty (A)	(B)	(C)	(D)	(E)	(F)	I	R
1A	1	119280-01600	FLANGE, MOUNTING	1	1						
1B	1	119260-01600	HOUSING, FLYWHEEL			1					
1C	1	119600-01600	HOUSING, FLYWHEEL				1				
2	1	121120-01620	BOLT, M10X28	3	3	3	3				
3	1	119620-01750	CAP	1	1	1	1				
4	1	22312-080160	PIN, PARALLEL M8X16	2	2	2	2				
4-1	1	129100-01580	PIN, M8X16	2	2	2	2				N
	(A=E07809)	(B=E14948)	(C=E06944) (D=E06154)								
5	1	26206-100252	BOLT, M10X 25 PLATED	6	6	6	6				
6	1	119660-01640	CASE ASSY, OIL SEAL	1	1	1	1				W
	(A=E25453)	(B=E43621)	(C=E25052) (D=E37751)								
7	2	124085-02220	SEAL, OIL	1	1	1	1				
8	1	22312-060100	PIN, PARALLEL M6X10	2	2	2	2				
8-1	1	119620-01620	PIN, M6X10	2	2	2	2				N
	(A=E07809)	(B=E14948)	(C=E06944) (D=E06154)								
9	1	26106-060202	BOLT, M6X 20 PLATED	10	10	10	10				
9-1	1	26106-060222	BOLT, M6X 22 PLATED	10	10	10	10				N
	(A=E03353)	(B=E01606)	(C=E03973) (D=E01486)								

N:Old ←Yes/No→ New. Q:Old ←No/Yes→ New. R:Old ←Yes/Yes→ New. S:Old ←No/No→ New. W:Add. Z:Discontinued. F:Interchangeable by set. K:Q'ty Change

Copyright (C) YANMAR CO., LTD. All RightsReserved.

Fig.6. LUBRICATING OIL SUMP

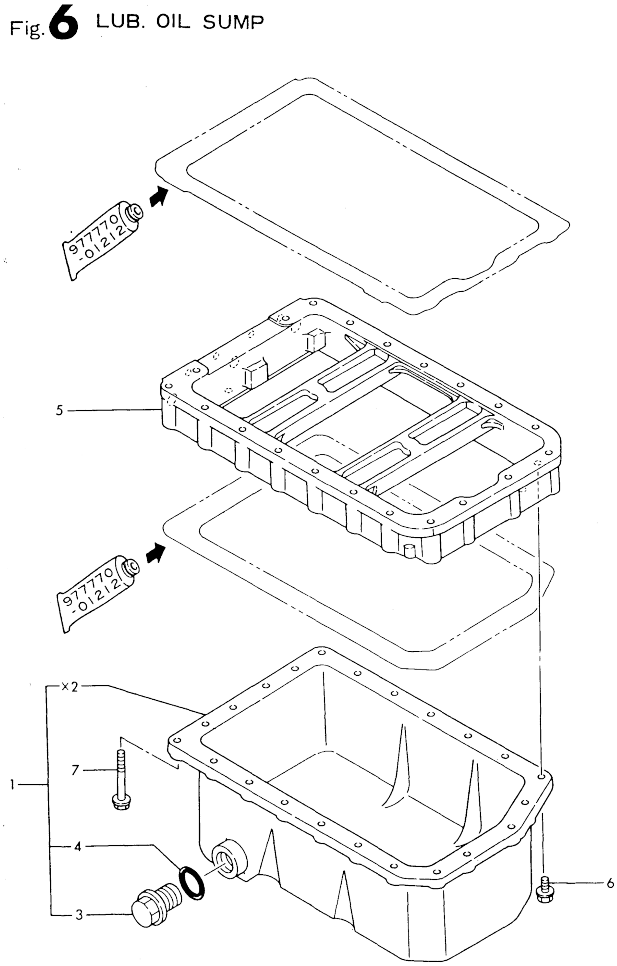

(A)=3TN66E-S
(B)=3TNA72E-S
(C)=3TN66E-G2
(D)=3TNA72E-G2
(E)=
(F)=

No.	Lev.	Parts No.	Description	Q'ty (A)	(B)	(C)	(D)	(E)	(F)	I	R
1	1	719288-01540	SUMP ASSY, OIL	1		1					
1-1	1	119260-01770	SUMP ASSY, OIL	1		1				N	
	(A=EXXX)		(C=EXXX)								
3	2	121400-01640	PLUG, 16	1		1					
4	2	24311-000180	O-RING, 1AP18.0	1		1					
5	1	119454-01721	SPACER, OIL SUMP	1		1					
6	1	26106-060102	BOLT, M6X 10 PLATED	3		3					
7	1	26106-060452	BOLT, M6X 45 PLATED	20		20					

N:Old ◄Yes/No► New. Q:Old ◄No/Yes► New. R:Old ◄Yes/Yes► New. S:Old ◄No/No► New. W:Add. Z:Discontinued. F:Interchangeable by set. K:Q'ty Change

Copyright (C) YANMAR CO., LTD. All RightsReserved.

Fig.7. LUBRICATING OIL SUMP

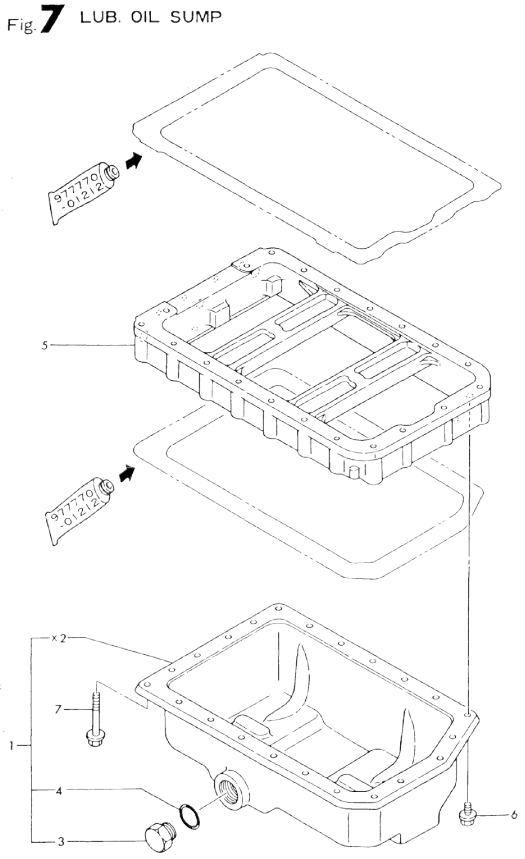

Remarks
(1) SIMULTANEOUS REPLACEMENT OF REF. NO.5-1 & FIG.30.REF.NO.2-1 ARE INTERCHANGEABLE.

(A)=3TN66E-S (D)=3TNA72E-G2
(B)=3TNA72E-S (E)=
(C)=3TN66E-G2 (F)=

No.	Lev.	Parts No.	Description		Q'ty (A)	(B)	(C)	(D)	(E)	(F)	I	R
1A	1	719688-01540	SUMP ASSY, OIL			1						
1A-1	1	719631-01540	SUMP ASSY, OIL			1					N	
		(B=E02649)										
1B	1	719600-01541	SUMP ASSY, OIL					1				
1B-1	1	719600-01542	SUMP ASSY, OIL					1			N	
				(D=E17064)								
1B-2	1	119600-01770	SUMP ASSY, OIL					1			N	
				(D=EXXX)								
3	2	171301-01640	PLUG, 22			1		1				
4	2	24341-000250	O-RING, 1AS25.0			1		1				
4-1	2	24341-000240	O-RING, 1AS24.0			1		1			N	
		(B=E02649)		(D=E02936)								
5	1	119600-01720	SPACER, OIL SUMP			1		1				
5-1	1	119600-01721	SPACER, OIL SUMP			1		1			F	1
		(B=E00583)		(D=E00581)								
5-2	1	119600-01722	SPACER, OIL SUMP			1		1			R	
		(B=E14948)		(D=E06154)								
6	1	26106-060122	BOLT, M6X 12 PLATED			3		3				
7	1	26106-060452	BOLT, M6X 45 PLATED			20		20				

N:Old ←Yes/No→ New. Q:Old ←No/Yes→ New. R:Old ←Yes/Yes→ New. S:Old ←No/No→ New. W:Add. Z:Discontinued. F:Interchangeable by set. K:Q'ty Change

Copyright (C) YANMAR CO., LTD. All RightsReserved.

Fig.8. LABEL

Fig. 8 LABEL

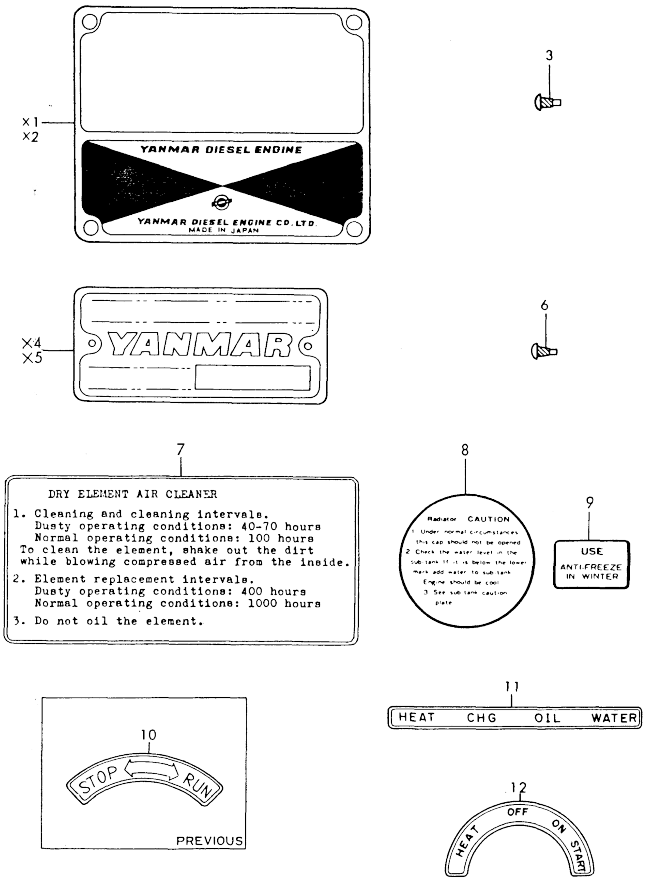

(A)=3TN66E-S (D)=3TNA72E-G2
(B)=3TNA72E-S (E)=
(C)=3TN66E-G2 (F)=

No.	Lev.	Parts No.	Description	Q'ty (A)	(B)	(C)	(D)	(E)	(F)	I	R
3	1	102210-07990	RIVET	4	4	4	4				
6	1	102210-07990	RIVET	2	2	2	2				
7	1	124764-12600	LABEL, AIR CLEANER	1	1	1	1				
7-1	1	129136-12600	LABEL, AIR CLEANER	1	1	1	1				N
	(A=E25453)	(B=E43621)	(C=E23602) (D=E37751)								
8	1	124764-44800	LABEL, RADIATOR	1	1	1	1				
9	1	124764-44920	LABEL, ANTI-FREEZING	1	1	1	1				
10	1	119888-66140	LABEL, INSTRUCTION	1	1	1	1				Z
	(A=EXXX)	(B=EXXX)	(C=EXXX) (D=EXXX)								
11	1	119888-91610	LABEL, CW & OIL LAMP	1	1	1	1				
12	1	119888-91620	LABEL, KEY SWITCH	1	1	1	1				

N:Old ←Yes/No→ New. Q:Old ←No/Yes→ New, R:Old ←Yes/Yes→ New, S:Old ←No/No→ New, W:Add, Z:Discontinued, F:Interchangeable by set, K:Q'ty Change

Copyright (C) YANMAR CO., LTD. All RightsReserved.

Fig.9. ENGINE LIFTER & FOOT BRACKET

Fig. 9 ENGINE LIFTER & ENGINE BRACKET

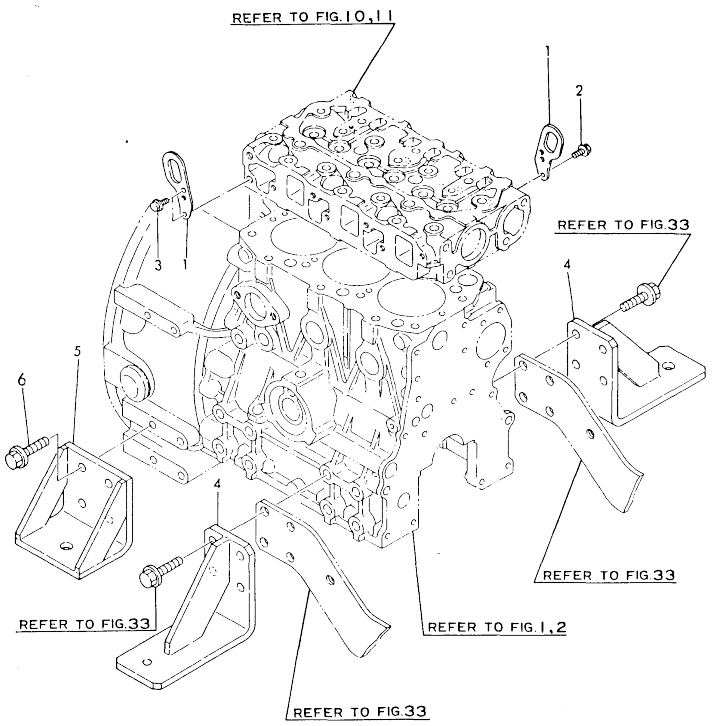

(A)=3TN66E-S (D)=3TNA72E-G2
(B)=3TNA72E-S (E)=
(C)=3TN66E-G2 (F)=

No.	Lev.	Parts No.	Description	Q'ty (A)	(B)	(C)	(D)	(E)	(F)	I	R
1	1	119260-07900	LIFTER	2	2	2	2				
2	1	26106-080142	BOLT, M8X 14 PLATED	1	1	1	1				
3	1	26106-080142	BOLT, M8X 14 PLATED	2	2	2	2				
4	1	119288-08100	FOOT	2	2						
5	1	119888-08110	FOOT	2	2						
6	1	26106-100202	BOLT, M10X 20 PLATED	8	8						

N:Old ←Yes/No→ New. Q:Old ←No/Yes→ New. R:Old ←Yes/Yes→ New. S:Old ←No/No→ New. W:Add. Z:Discontinued. F:Interchangeable by set. K:Q'ty Change

Copyright (C) YANMAR CO., LTD. All RightsReserved.

Fig.10. CYLINDER HEAD

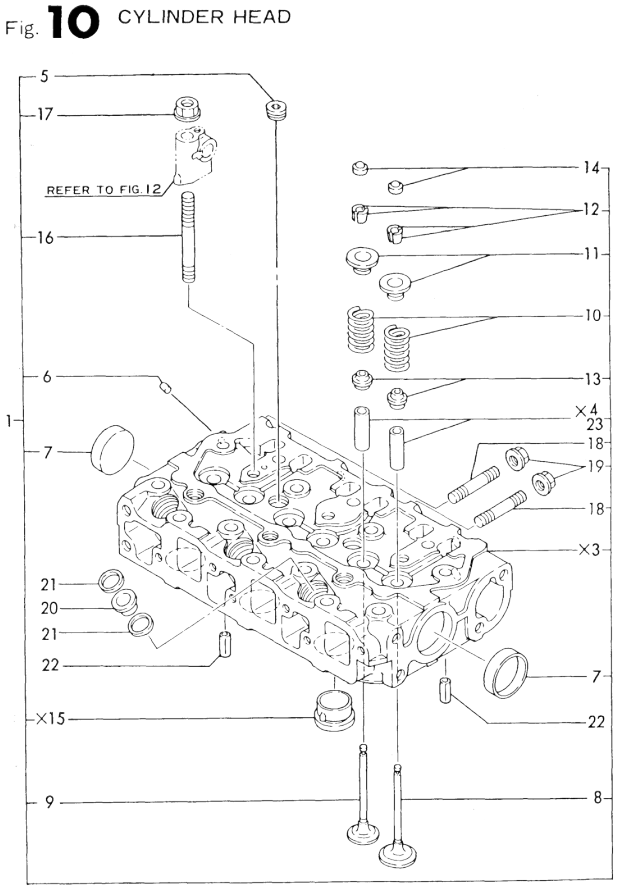

(A)=3TN66E-S
(B)=3TNA72E-S
(C)=3TN66E-G2
(D)=3TNA72E-G2
(E)=
(F)=

No.	Lev.	Parts No.	Description	Q'ty (A)	(B)	(C)	(D)	(E)	(F)	I	R
1	1	719260-11700	HEAD ASSY, CYLINDER	1		1					
5	3	121850-11860	PLUG, PT1/4	2		2					
5-1	3	23871-020000	PLUG, R02	2		2				N	
	(A=E26502)		(C=E27264)								
6	3	27221-050080	PLUG, 5X 8	1		1					
7	3	27241-350000	PLUG, 35	2		2					
8	2	119260-11100	VALVE, INTAKE	3		3					
9	2	119260-11110	VALVE, EXHAUST	3		3					
10	2	114250-11120	SPRING, VALVE	6		6					
11	2	114250-11180	RETAINER, SPRING	6		6					
12	2	114250-11190	COTTER	12		12					
13	2	119260-11340	SEAL, VALVE STEM	6		6					
14	2	119260-11370	CAP, VALVE	6		6					
16	2	119620-11350	STUD	2		2					
17	2	26366-080002	NUT, M8	2		2					
18	2	26216-080502	STUD, M8X 50	2		2					
19	2	194990-22050	NUT, M8	2							
19-1	2	26366-080002	NUT, M8	2		2				N	
	(A=EXXX)		(C=EXXX)								
20	1	119600-11450	PROTECTOR, NOZZLE	3		3					
21	1	119600-11460	GASKET, NOZZLE	6		6					
22	1	22351-060012	PIN, SPRING 6.0X12	2		2					
23	1	119260-11800	GUIDE, VALVE	6		6					1

Remarks
(1) REPAIR PART.

N:Old ←Yes/No→ New. Q:Old ←No/Yes→ New, R:Old ←Yes/Yes→ New, S:Old ←No/No→ New. W:Add. Z:Discontinued. F:Interchangeable by set. K:Q'ty Change

Copyright (C) YANMAR CO., LTD. All RightsReserved.

Fig.11. CYLINDER HEAD

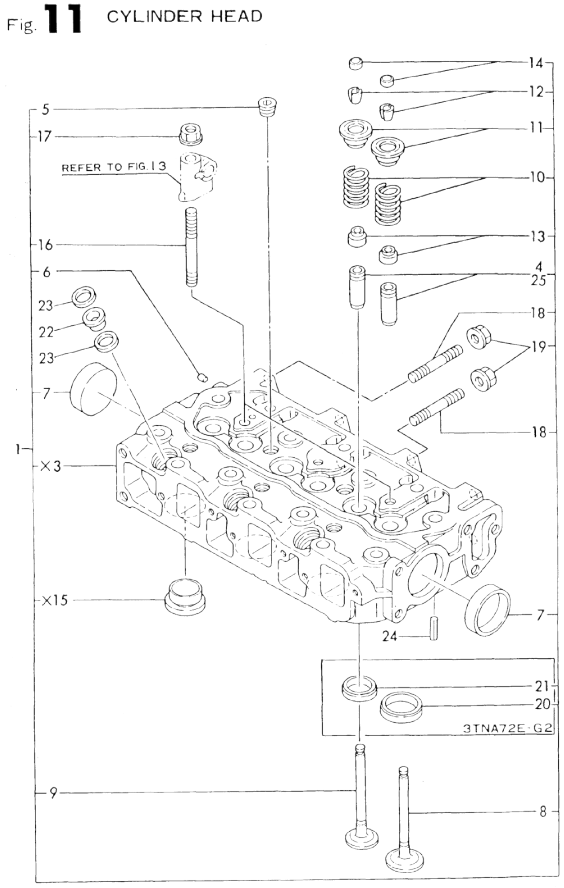

(A)=3TN66E-S (B)=3TNA72E-S (C)=3TN66E-G2 (D)=3TNA72E-G2 (E)= (F)=

No.	Lev.	Parts No.	Description	Q'ty (A)	(B)	(C)	(D)	(E)	(F)	I	R
1A	1	719620-11701	HEAD ASSY, CYLINDER		1						
1A-1	1	719688-11700	HEAD ASSY, CYLINDER		1					N	
		(B=E14948)									
1B	1	719620-11701	HEAD ASSY, CYLINDER				1				
1B-1	1	719620-11702	HEAD ASSY, CYLINDER				1			N	
			(D=E13024)								
5	3	121850-11860	PLUG, PT1/4		2		2				
6	3	27221-050080	PLUG, 5X 8		1		1				
7	3	27241-400000	PLUG, 40		2		2				
8	2	119620-11100	VALVE, INTAKE		3		3				
9	2	119620-11110	VALVE, EXHAUST		3		3				
10	2	119620-11120	SPRING, VALVE		6		6				
11	2	119620-11180	RETAINER, SPRING		6		6				
12	2	101158-11190	COTTER		6		6				
12-1	2	27310-070001	COTTER, 7		6		6			R	
		(B=EXXXXX)	(D=EXXXXX)								
13	2	124950-11340	SEAL, VALVE STEM		6		6				
13-1	2	124950-11340	SEAL, VALVE STEM		3		3			K	
		(B=E14948)	(D=E13024)								
13A	2	124160-11340	SEAL, VALVE STEM		3		3			W	
		(B=E14948)	(D=E13024)								
14	2	104211-11370	CAP, VALVE		6		6				
16	2	119620-11350	STUD		2		2				
17	2	26366-080002	NUT, M8		2		2				
18	2	26216-080552	STUD, M8X 55		2		2				
19	2	194990-22050	NUT, M8		2		2				
20	2	119620-11080	SEAT, INTAKE VALVE				3			W	
			(D=EXXX)								
21	2	119620-11090	SEAT, EXHAUST VALVE				3			W	
			(D=EXXX)								
22	1	119600-11450	PROTECTOR, NOZZLE		3		3				
23	1	119600-11460	GASKET, NOZZLE		6		6				
24	1	22351-060012	PIN, SPRING 6.0X12		2		2				
25	1	119620-11801	GUIDE, VALVE		6		6				1

Remarks
(1) REPAIR PART.

N:Old ←Yes/No→ New. Q:Old ←No/Yes→ New, R:Old ←Yes/Yes→ New, S:Old ←No/No→ New. W:Add. Z:Discontinued. F:Interchangeable by set. K:Q'ty Change

Copyright (C) YANMAR CO., LTD. All RightsReserved.

Fig.12. ROCKER ARM

Fig. 12 ROCKER ARM

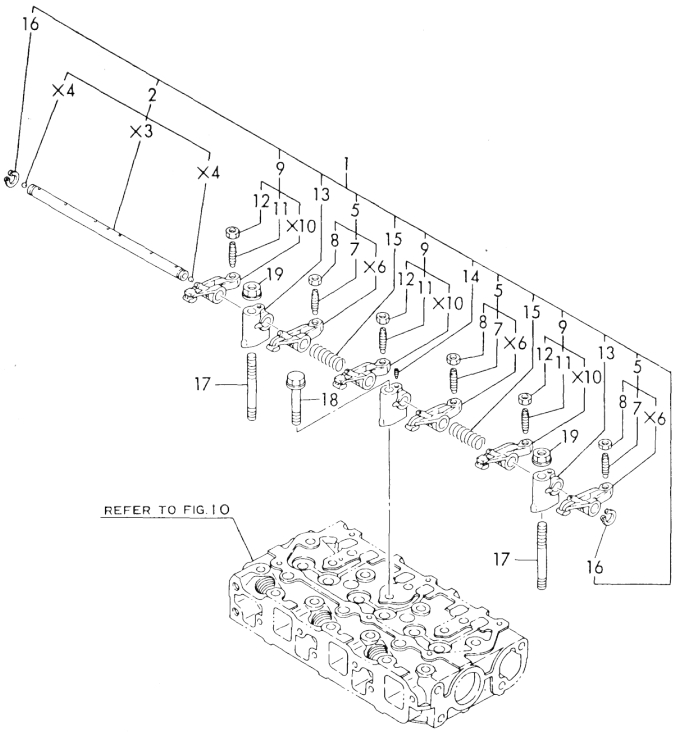

(A)=3TN66E-S
(B)=3TNA72E-S
(C)=3TN66E-G2
(D)=3TNA72E-G2
(E)=
(F)=

No.	Lev.	Parts No.	Description	Q'ty (A)	(B)	(C)	(D)	(E)	(F)	I	R
1	1	119260-11200	SUPPORT ASSY, ARM	1		1					
2	2	119260-11240	SHAFT ASSY, ROCKER	1		1					
5	2	719260-11650	ARM ASSY, ROCKER	3		3					
7	3	105010-11230	SCREW, VALVE ADJUST	3		3					
8	3	26756-060002	NUT, LOCK M6	3		3					
9	2	719260-11660	ARM ASSY, ROCKER	3		3					
11	3	105010-11230	SCREW, VALVE ADJUST	3		3					
12	3	26756-060002	NUT, LOCK M6	3		3					
13	2	119260-11260	SUPPORT, ROCKER ARM	3		3					
14	2	119260-11270	SCREW	1		1					
15	2	119260-11280	SPRING	2		2					
16	2	22242-000100	RING, 10	2		2					
17	1	119620-11350	STUD	2		2					
18	1	26106-080452	BOLT, M8X 45 PLATED	1		1					
19	1	26366-080002	NUT, M8	2		2					

N:Old ←Yes/No→ New. Q:Old ←No/Yes→ New. R:Old ←Yes/Yes→ New. S:Old ←No/No→ New. W:Add. Z:Discontinued. F:Interchangeable by set. K:Q'ty Change

Copyright (C) YANMAR CO., LTD. All RightsReserved.

Fig.13. ROCKER ARM

Fig. 13 ROCKER ARM

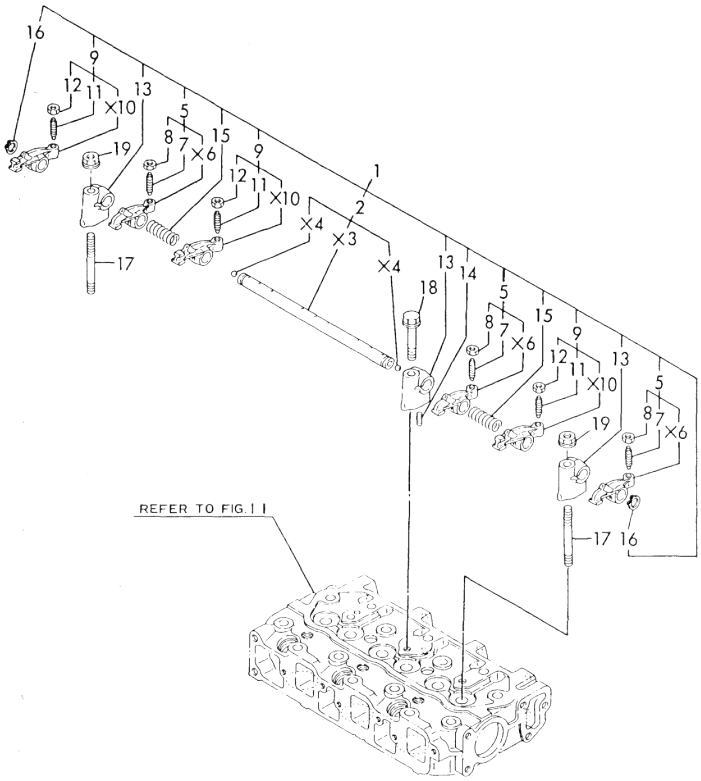

(A)=3TN66E-S
(B)=3TNA72E-S
(C)=3TN66E-G2
(D)=3TNA72E-G2
(E)=
(F)=

No.	Lev.	Parts No.	Description	Q'ty (A)	(B)	(C)	(D)	(E)	(F)	I	R
1	1	119620-11200	SUPPORT ASSY, ARM		1		1				
2	2	119620-11240	SHAFT ASSY, ROCKER		1		1				
5	2	719620-11650	ARM ASSY, ROCKER		3		3				
7	3	105010-11230	SCREW, VALVE ADJUST		3		3				
8	3	26756-060002	NUT, LOCK M6		3		3				
9	2	719620-11660	ARM ASSY, ROCKER		3		3				
11	3	105010-11230	SCREW, VALVE ADJUST		3		3				
12	3	26756-060002	NUT, LOCK M6		3		3				
13	2	119620-11260	SUPPORT, ROCKER ARM		3		3				
14	2	26979-050162	SCREW, M5X16		1		1				
15	2	119620-11280	SPRING		2		2				
16	2	22242-000120	RING, 12		2		2				
17	1	119620-11350	STUD		2		2				
18	1	26106-080452	BOLT, M8X 45 PLATED		1		1				
19	1	26366-080002	NUT, M8		2		2				

N:Old ←Yes/No→ New. Q:Old ←No/Yes→ New. R:Old ←Yes/Yes→ New. S:Old ←No/No→ New. W:Add. Z:Discontinued. F:Interchangeable by set. K:Q'ty Change

Copyright (C) YANMAR CO., LTD. All RightsReserved.

Fig.14. BONNET

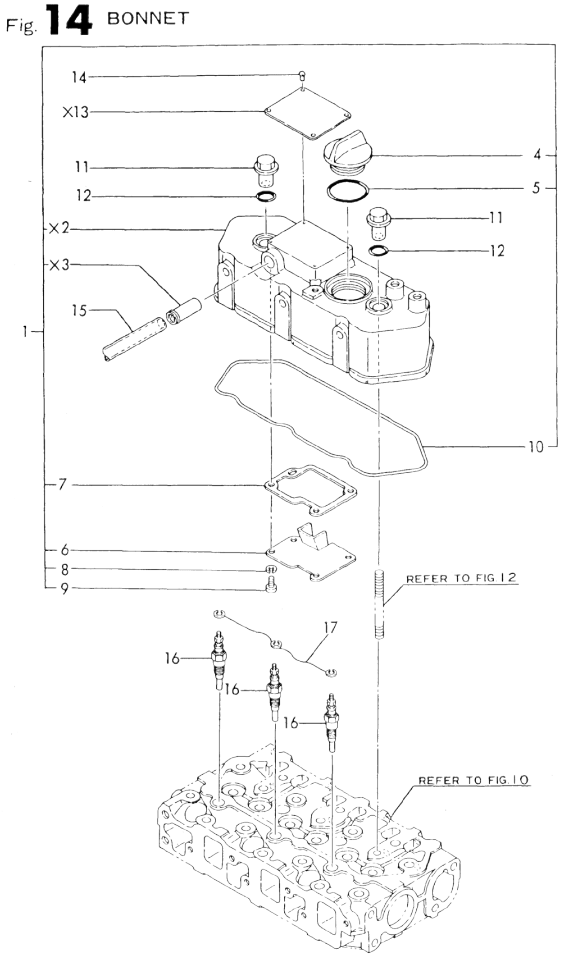

(A)=3TN66E-S
(B)=3TNA72E-S
(C)=3TN66E-G2
(D)=3TNA72E-G2
(E)=
(F)=

No.	Lev.	Parts No.	Description	Q'ty (A)	(B)	(C)	(D)	(E)	(F)	I	R
1	1	719260-11520	BONNET ASSY, HEAD	1		1					
1-1	1	719260-11521	BONNET ASSY, HEAD	1		1				N	
	(A=E17057)		(C=E16975)								
1-2	1	119260-11330	BONNET ASSY, HEAD	1		1				N	
	(A=E25453)		(C=E25052)								
4	2	124160-01750	COVER	1		1					
4-1	2	124160-01751	COVER, FILLER	1		1				R	
	(A=E04345)		(C=E06944)								
5	2	121420-01760	O-RING	1		1					
5-1	2	24311-000320	O-RING, 1AP32.0	1		1				N	
	(A=E17057)		(C=E16975)								
6	2	119260-03020	PLATE, SHELTER	1		1					
7	2	119260-03030	GASKET	1		1					
7-1	2	119260-03031	GASKET	1		1				N	
	(A=E25453)		(C=E25052)								
8	2	22217-050000	WASHER, SPRING 5	4		4					
9	2	26557-050102	SCREW, M5X10	4		4					
10	2	119260-11310	GASKET, BONNET	1		1					
11	1	124160-11360	KNOB	2		2					
12	1	24311-000120	O-RING, 1AP12.0	2		2					
14	1	102210-07990	RIVET	4		4					
15	1	23065-120500	PIPE, 12X 500	1		1					
16	1	129795-77800	PLUG, GLOW	3		3					
17	1	119620-77820	CONNECTOR, GLOW PLUG	1		1					

N:Old ←Yes/No→ New. Q:Old ←No/Yes→ New. R:Old ←Yes/Yes→ New. S:Old ←No/No→ New. W:Add. Z:Discontinued. F:Interchangeable by set. K:Q'ty Change

Copyright (C) YANMAR CO., LTD. All RightsReserved.

Fig.15. BONNET

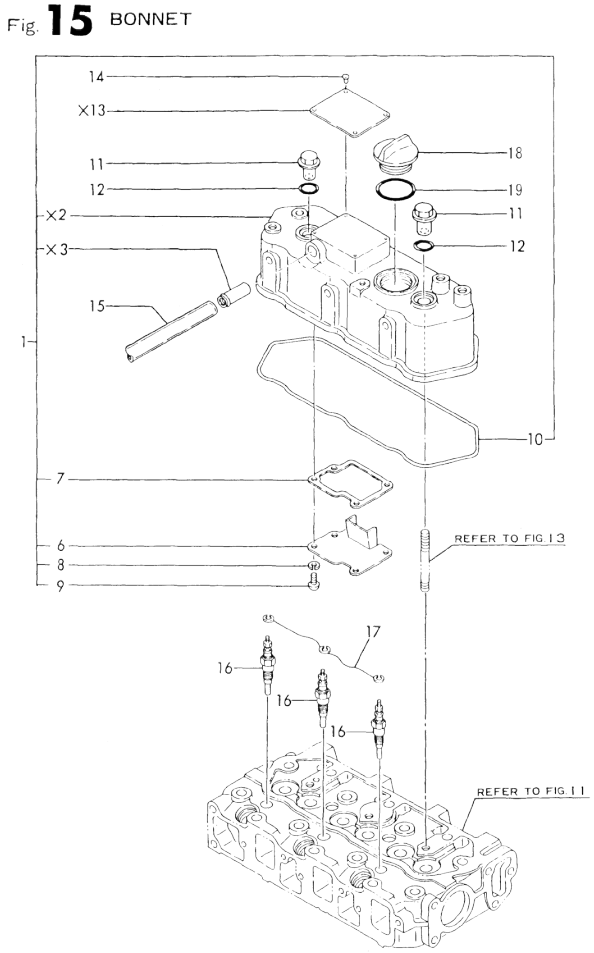

(A)=3TN66E-S (D)=3TNA72E-G2
(B)=3TNA72E-S (E)=
(C)=3TN66E-G2 (F)=

No.	Lev.	Parts No.	Description	Q'ty (A)	(B)	(C)	(D)	(E)	(F)	I	R
1	1	719620-11520	BONNET ASSY, HEAD		1		1				
1-1	1	719620-11521	BONNET ASSY, HEAD		1		1				N
		(B=E22675)	(D=E21965)								
1-2	1	119620-11330	BONNET ASSY, HEAD		1		1				N
		(B=E25453)	(D=E25052)								
6	2	119620-03020	PLATE, SHELTER		1		1				
7	2	119620-03030	GASKET		1		1				
7-1	2	119620-03031	GASKET		1		1				N
		(B=EXXX)	(D=EXXX)								
8	2	22217-050000	WASHER, SPRING 5		4		4				
9	2	26557-050102	SCREW, M5X10		4		4				
10	2	119620-11310	GASKET, BONNET		1		1				
11	1	129150-11360	BONNET ASSY, HEAD		2		2				
11-1	1	124160-11360	KNOB		2		2				R
		(B=E14948)	(D=E06154)								
12	1	24311-000120	O-RING, 1AP12.0		2		2				
14	1	102210-07990	RIVET		4		4				
15	1	23065-120500	PIPE, 12X 500		1		1				
16	1	129795-77800	PLUG, GLOW		3		3				
17	1	119620-77820	CONNECTOR, GLOW PLUG		1		1				
18	1	124160-01751	COVER, FILLER		1		1				
19	1	24311-000320	O-RING, 1AP32.0		1		1				

N:Old ←Yes/No→ New. Q:Old ←No/Yes→ New. R:Old ←Yes/Yes→ New. S:Old ←No/No→ New. W:Add. Z:Discontinued. F:Interchangeable by set. K:Q'ty Change

Copyright (C) YANMAR CO., LTD. All RightsReserved.

Fig.16. AIR CLEANER

Fig. 16 AIR CLEANER

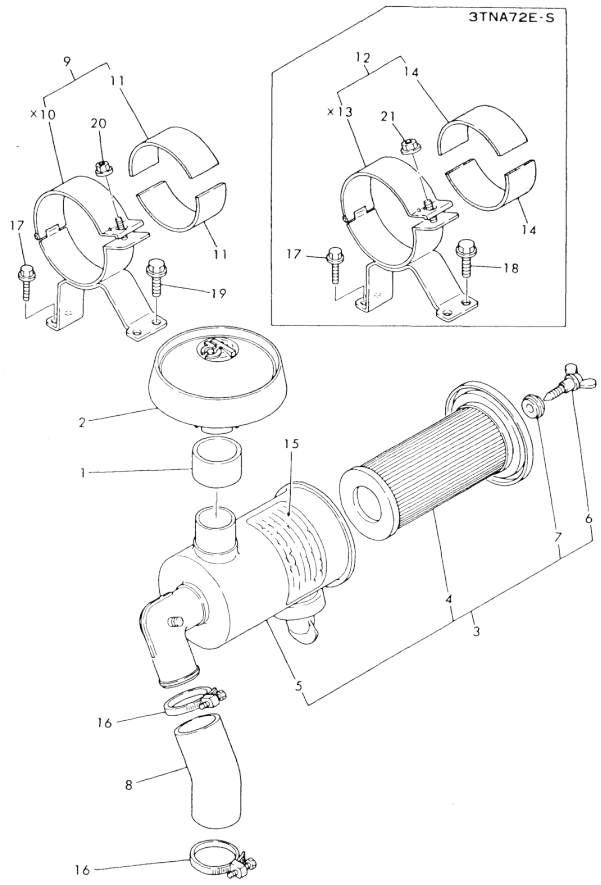

(A)=3TN66E-S
(B)=3TNA72E-S
(C)=3TN66E-G2
(D)=3TNA72E-G2
(E)=
(F)=

No.	Lev.	Parts No.	Description	Q'ty (A)	(B)	(C)	(D)	(E)	(F)	I	R
1	1	119288-12050	JOINT, PIPE	1	1	1	1				
2	1	121521-12400	CAP, RAIN	1	1	1	1				
3	1	119688-12500	CLEANER ASSY, AIR	1	1	1	1				
4	2	119860-12510	ELEMENT	1	1	1	1				
5	2	119688-12540	CASE ASSY, CLEANER	1	1	1	1				
6	2	119860-12550	BOLT	1	1	1	1				
7	2	119860-12560	WASHER, SEAL	1	1	1	1				
8	1	119654-12550	PIPE, AIR INTAKE	1	1	1	1				
8-1	1	119462-12550	PIPE, AIR INTAKE	1		1				S	
	(A=E17057)		(C=E16975)								
9	1	119288-12590	SUPPORT ASSY,CLEANER	1		1					
11	2	119640-12580	SEAT, RUBBER	2		2					
12	1	119640-12590	BRACKET		1		1				
14	2	119640-12580	SEAT, RUBBER		2		2				
15	1	124764-12600	LABEL, AIR CLEANER	1	1	1	1				
15-1	1	129136-12600	LABEL, AIR CLEANER	1	1	1	1			N	
	(A=E25453)		(B=E43621) (C=E23602) (D=E37751)								
16	1	23000-060000	CLAMP, 60	2	2	2	2				
17	1	26106-060122	BOLT, M6X 12 PLATED	2	2	2	2				
17-1	1	26106-060182	BOLT, M6X 18 PLATED		2		2			N	
			(B=E52499) (D=E37751)								
18	1	26106-080122	BOLT, M8X 12 PLATED		2		2				
18-1	1	26106-080182	BOLT, M8X 18 PLATED		2		2			N	
			(B=E52499) (D=E37751)								
19	1	26106-080162	BOLT, M8X 16 PLATED	2		2					
20	1	26366-060002	NUT, M6	1		1					
21	1	26366-080002	NUT, M8		1		1				

N:Old ◄Yes/No► New. Q:Old ◄No/Yes► New. R:Old ◄Yes/Yes► New. S:Old ◄No/No► New. W:Add. Z:Discontinued. F:Interchangeable by set. K:Q'ty Change

Copyright (C) YANMAR CO., LTD. All RightsReserved.

Fig.17. INTAKE MANIFOLD

Fig. 17 SUCTION MANIFOLD

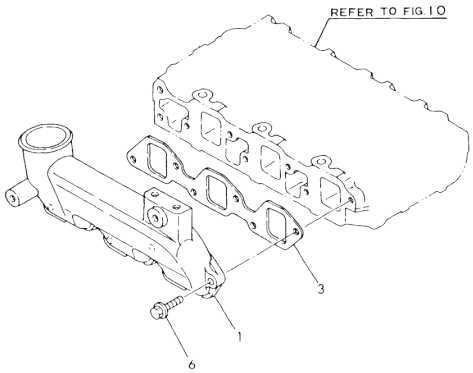

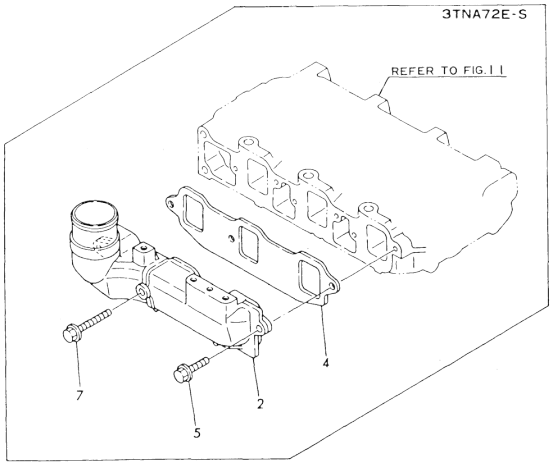

(A)=3TN66E-S
(B)=3TNA72E-S
(C)=3TN66E-G2
(D)=3TNA72E-G2
(E)=
(F)=

No.	Lev.	Parts No.	Description	Q'ty (A)	(B)	(C)	(D)	(E)	(F)	I	R
1	1	119288-12100	MANIFOLD, AIR INTAKE	1		1					
2	1	119660-12101	MANIFOLD, AIR INTAKE		1		1				
3	1	119260-12110	GASKET, MANIFOLD	1		1					
3-1	1	119260-12111	GASKET, MANIFOLD	1		1				N	
	(A=E25453)		(C=E25052)								
4	1	119660-12111	GASKET, MANIFOLD		1		1				
5	1	26106-060162	BOLT, M6X 16 PLATED		2		2				
6	1	26106-060202	BOLT, M6X 20 PLATED	4		4					
7	1	26106-060402	BOLT, M6X 40 PLATED		1		1				

N:Old ←Yes/No→ New. Q:Old ←No/Yes→ New. R:Old ←Yes/Yes→ New. S:Old ←No/No→ New. W:Add. Z:Discontinued. F:Interchangeable by set. K:Q'ty Change

Copyright (C) YANMAR CO., LTD. All RightsReserved.

Fig.18. SILENCER

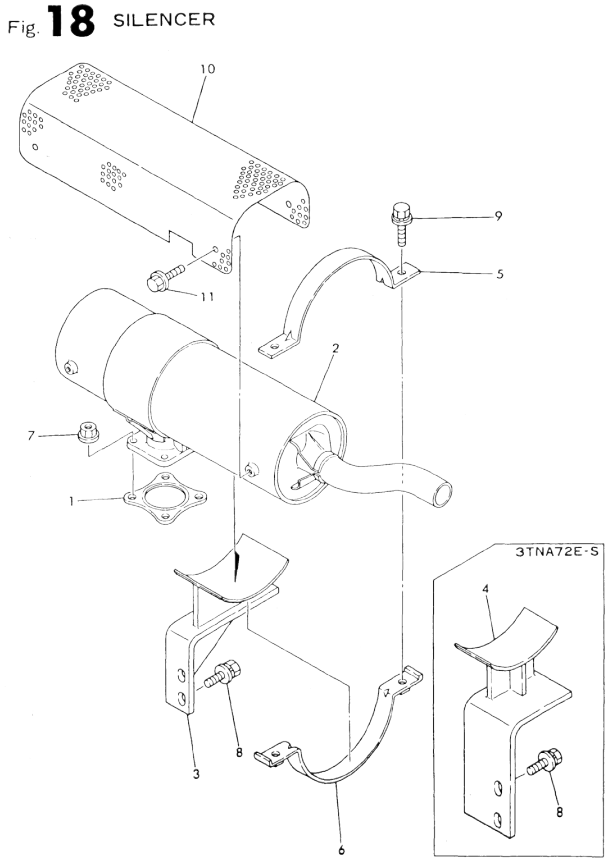

Remarks
(1) SIMULTANEOUS REPLACEMENT OF REF. NO.4-1 & FIG.20.REF.NO.1-1 ARE INTERCHANGEABLE.

(A)=3TN66E-S (D)=3TNA72E-G2
(B)=3TNA72E-S (E)=
(C)=3TN66E-G2 (F)=

No.	Lev.	Parts No.	Description	Q'ty (A)	(B)	(C)	(D)	(E)	(F)	I	R
1	1	121000-13200	GASKET, SILENCER	1	1	1	1				
2	1	119288-13500	SILENCER	1	1	1	1				
3	1	119288-13650	STAY, SILENCER	1		1					
4	1	119688-13650	STAY, SILENCER		1		1				
4-1	1	119688-13651	STAY, SILENCER		1		1			F	1
		(B=E01252)	(D=E01486)								
5	1	119888-13670	BAND, SILENCER	1	1	1	1				
6	1	119888-13680	BAND, SILENCER	1	1	1	1				
7	1	194990-22050	NUT, M8	4	4	4	4				
8	1	26014-080302	BOLT, M8X 30	2	2	2	2				
9	1	26106-080162	BOLT, M8X 16 PLATED	2	2	2	2				
10	1	119888-13600	COVER, SILENCER	1	1	1	1				
11	1	26106-080102	BOLT, M8X 10 PLATED	4	4	4	4				
11-1	1	26106-080122	BOLT, M8X 12 PLATED	4	4	4	4			N	
	(A=E03686)	(B=E02649)	(C=E03973) (D=E02936)								

N:Old $\frac{\text{Yes}}{\text{No}}$ New. Q:Old $\frac{\text{No}}{\text{Yes}}$ New. R:Old $\frac{\text{Yes}}{\text{Yes}}$ New. S:Old $\frac{\text{No}}{\text{No}}$ New. W:Add. Z:Discontinued. F:Interchangeable by set. K:Q'ty Change

Copyright (C) YANMAR CO., LTD. All RightsReserved.

Fig.19. EXHAUST MANIFOLD

Fig. 19 EXHAUST MANIFOLD

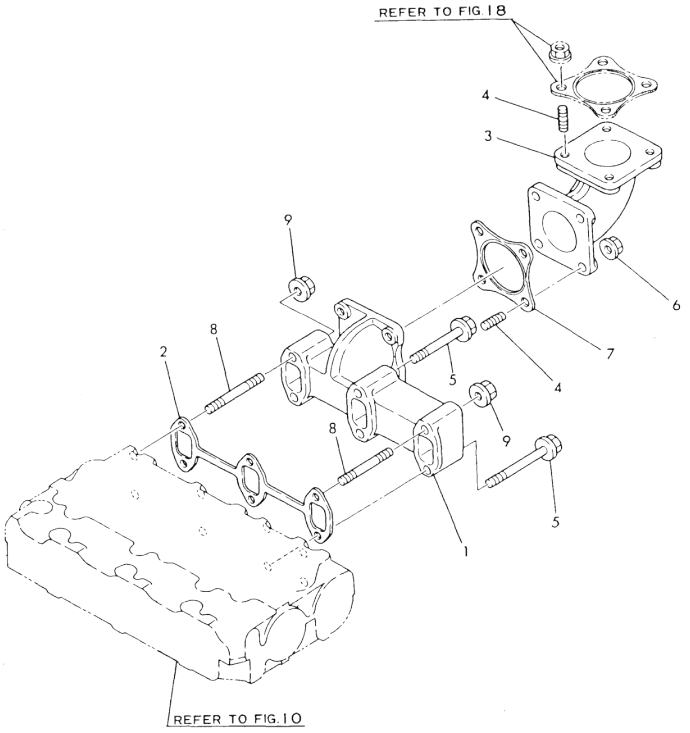

(A)=3TN66E-S
(B)=3TNA72E-S
(C)=3TN66E-G2
(D)=3TNA72E-G2
(E)=
(F)=

No.	Lev.	Parts No.	Description	Q'ty (A)	(B)	(C)	(D)	(E)	(F)	I	R
1	1	119260-13100	MANIFOLD, EXHAUST	1		1					
2	1	119260-13110	GASKET	1		1					
3	1	119620-13550	BEND	1		1					
4	1	26216-080222	STUD, M8X 22	8		8					
4-1	1	26216-080222	STUD, M8X 22	4		4					K
	(A=EXXX)		(C=EXXX)								
5	1	26106-060402	BOLT, M6X 40 PLATED	4		4					
5-1	1	26106-060352	BOLT, M6X 35 PLATED	4		4					N
	(A=E01174)		(C=E01710)								
6	1	194990-22050	NUT, M8	4		4					
7	1	121000-13200	GASKET, SILENCER	1		1					
8	1	26216-080502	STUD, M8X 50	2		2					
9	1	26366-080002	NUT, M8	2		2					
9-1	1	26366-060002	NUT, M6	2		2					N
	(A=EXXX)		(C=EXXX)								

N:Old ←Yes/No→ New. Q:Old ←No/Yes→ New. R:Old ←Yes/Yes→ New. S:Old ←No/No→ New. W:Add. Z:Discontinued. F:Interchangeable by set. K:Q'ty Change

Copyright (C) YANMAR CO., LTD. All RightsReserved.

Fig.20. EXHAUST MANIFOLD

Fig. 20 EXHAUST MANIFOLD

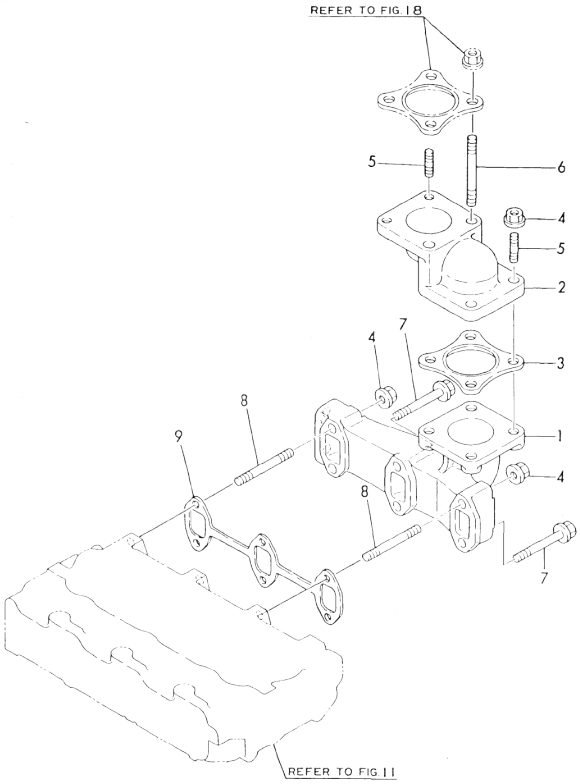

Remarks
(1) SIMULTANEOUS REPLACEMENT OF REF. NO.1-1 & FIG.18.REF.NO.4-1 ARE INTERCHANGEABLE.

(A)=3TN66E-S
(B)=3TNA72E-S
(C)=3TN66E-G2
(D)=3TNA72E-G2
(E)=
(F)=

No.	Lev.	Parts No.	Description	Q'ty (A)	(B)	(C)	(D)	(E)	(F)	I	R
1	1	119631-13100	MANIFOLD, EXHAUST		1		1				
1-1	1	119631-13101	MANIFOLD, EXHAUST		1		1			F	1
		(B=E01252)	(D=E01486)								
2	1	119840-13150	PIPE		1		1				
3	1	121000-13200	GASKET, SILENCER		1		1				
4	1	194990-22050	NUT, M8		4		4				
5	1	26216-080222	STUD, M8X 22		4		4				
6	1	26216-080702	STUD, M8X 70		2		2				
7	1	26106-060402	BOLT, M6X 40 PLATED		4		4				
8	1	26216-080552	STUD, M8X 55		2		2				
9	1	119620-13110	GASKET		1		1			W	
		(B=E01040)	(D=E01486)								

N:Old $\xleftarrow[\text{No}]{\text{Yes}}$ New. Q:Old $\xleftarrow[\text{Yes}]{\text{No}}$ New, R:Old $\xleftarrow[\text{Yes}]{\text{Yes}}$ New, S:Old $\xleftarrow[\text{No}]{\text{No}}$ New, W:Add, Z:Discontinued, F:Interchangeable by set, K:Q'ty Change

Copyright (C) YANMAR CO., LTD. All RightsReserved.

Fig.21. CAMSHAFT

Fig. 21 CAMSHAFT

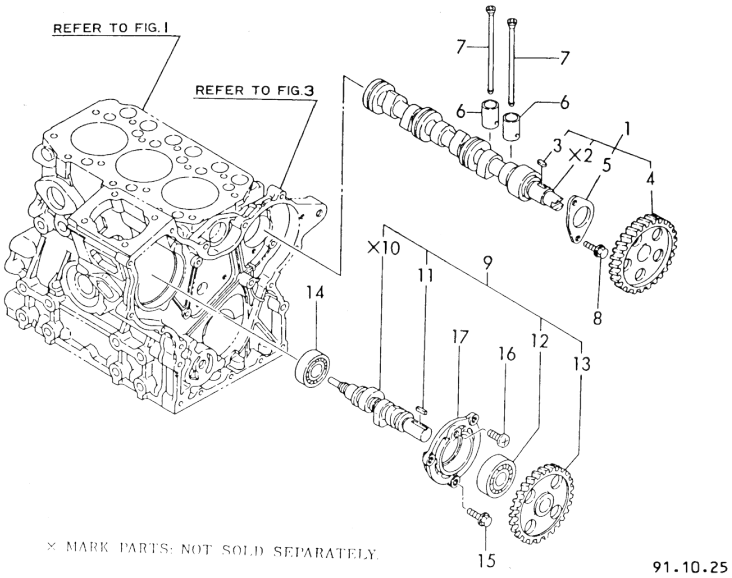

(A)=3TN66E-S
(B)=3TNA72E-S
(C)=3TN66E-G2
(D)=3TNA72E-G2
(E)=
(F)=

No.	Lev.	Parts No.	Description	Q'ty (A)	(B)	(C)	(D)	(E)	(F)	I	R
1	1	719260-14580	CAMSHAFT ASSY	1		1					
3	2	22512-040120	KEY, 4X 12	1		1					
4	2	119260-14100	GEAR, CAMSHAFT	1		1					
5	2	119620-02450	BEARING, THRUST	1		1					
6	1	119260-14200	TAPPET	6		6					
7	1	119260-14400	ROD, PUSH	6		6					
8	1	26106-060122	BOLT, M6X 12 PLATED	2		2					
9	1	719660-14590	CAMSHAFT	1		1					
11	2	22512-040120	KEY, 4X 12	1		1					
12	2	24102-063034	BEARING, BALL 6303U	1		1					
13	2	119260-25900	GEAR, PUMP	1		1					
14	1	24101-062034	BEARING, BALL 6203	1		1					
15	1	26106-060162	BOLT, M6X 16 PLATED	3		3					
16	1	26587-080102	SCREW, M8X10	1		1					
17	1	119660-01821	BEARING, FUEL CAM	1		1					

N:Old ←Yes/No→ New. Q:Old ←No/Yes→ New. R:Old ←Yes/Yes→ New. S:Old ←No/No→ New. W:Add. Z:Discontinued. F:Interchangeable by set. K:Q'ty Change

Copyright (C) YANMAR CO., LTD. All RightsReserved.

Fig.22. CAMSHAFT & FUEL I. CAMSHAFT

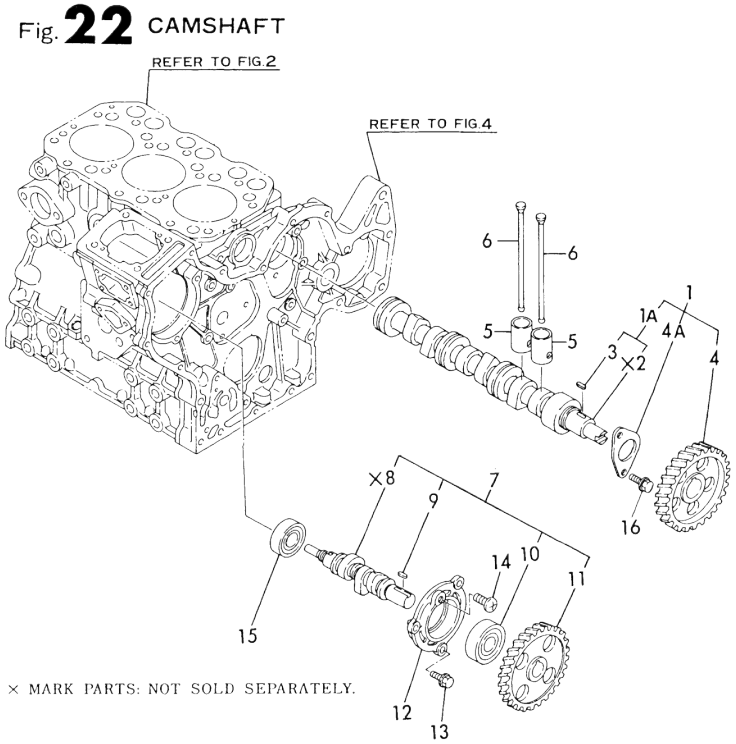

(A)=3TN66E-S
(B)=3TNA72E-S
(C)=3TN66E-G2
(D)=3TNA72E-G2
(E)=
(F)=

No.	Lev.	Parts No.	Description	Q'ty (A)	(B)	(C)	(D)	(E)	(F)	I	R
1	1	119629-14580	CAMSHAFT ASSY		1		1				
1A	2	719620-14581	CAMSHAFT ASSY		1		1				
3	3	22512-040120	KEY, 4X 12		1		1				
4	2	119620-14100	GEAR, CAMSHAFT		1		1				
4A	2	119620-02450	BEARING, THRUST		1		1				
5	1	119620-14200	TAPPET		6		6				
6	1	119620-14400	ROD, PUSH		6		6				
7	1	719660-14590	CAMSHAFT		1		1				
9	2	22512-040120	KEY, 4X 12		1		1				
10	2	24102-063034	BEARING, BALL 6303U		1		1				
11	2	119660-25902	GEAR, PUMP		1		1				
12	1	119660-01821	BEARING, FUEL CAM		1		1				
13	1	26106-060162	BOLT, M6X 16 PLATED		3		3				
14	1	26587-080102	SCREW, M8X10		1		1				
15	1	24101-062034	BEARING, BALL 6203		1		1				
16	1	26106-060122	BOLT, M6X 12 PLATED		2		2				

N:Old ◄Yes/No► New. Q:Old ◄No/Yes► New. R:Old ◄Yes/Yes► New. S:Old ◄No/No► New. W:Add. Z:Discontinued. F:Interchangeable by set. K:Q'ty Change

Copyright (C) YANMAR CO., LTD. All RightsReserved.

Fig.23. CRANKSHAFT

Fig. 23 CRANKSHAFT

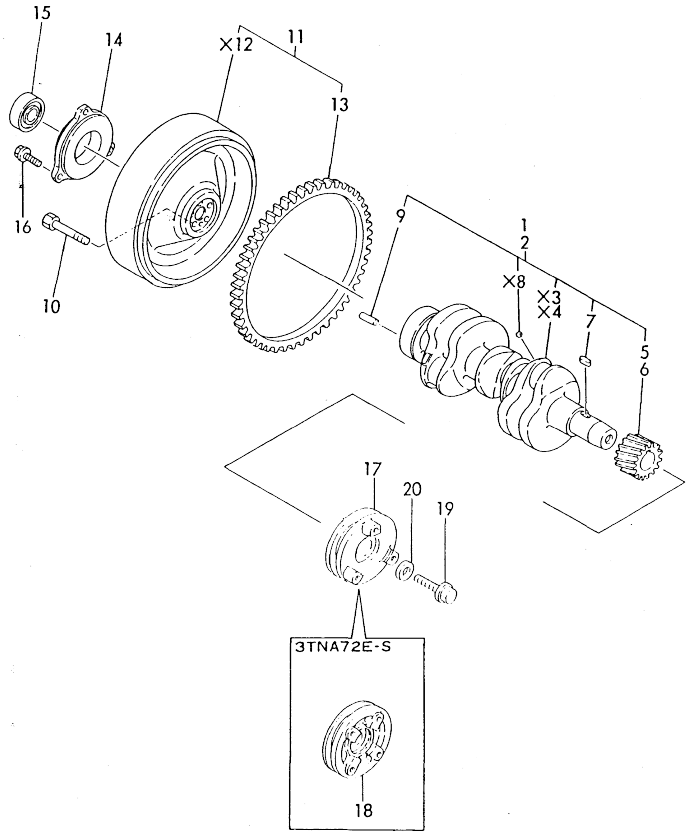

(A)=3TN66E-S
(B)=3TNA72E-S
(C)=3TN66E-G2
(D)=3TNA72E-G2
(E)=
(F)=

No.	Lev.	Parts No.	Description	Q'ty (A)	(B)	(C)	(D)	(E)	(F)	I	R
1	1	719260-21700	CRANKSHAFT ASSY	1		1					
2	1	719660-21700	CRANKSHAFT ASSY		1		1				
5	2	119260-21200	GEAR, CRANKSHAFT	1		1					
6	2	119660-21201	GEAR, CRANKSHAFT		1		1				
7	2	22512-040120	KEY, 4X 12	1	1	1	1				
9	2	129100-01580	PIN, M8X16	1	1	1	1				
10	1	121111-21501	BOLT, FLYWHEEL	5	5	5	5				
11A	1	119688-21590	FLYWHEEL ASSY	1	1						
11B	1	119260-21590	FLYWHEEL ASSY			1					
11C	1	119600-21580	FLYWHEEL ASSY				1				
13A	2	119865-21600	GEAR, RING	1	1		1				
13B	2	124950-21600	GEAR, RING			1					
14	1	119888-21450	RETAINER, BEARING	1	1						
15	1	24104-062054	BEARING, BALL 6205UU	1	1						
16	1	26106-080222	BOLT, M8X 22 PLATED	3	3						
17	1	119260-21650	V-PULLEY	1		1					
18	1	119660-21651	V-PULLEY		1		1				
19	1	119621-21680	BOLT, FLANGE 12X1.25	1	1	1	1				
20	1	119620-21941	WASHER	1	1	1	1				

N:Old ←Yes/No→ New. Q:Old ←No/Yes→ New. R:Old ←Yes/Yes→ New. S:Old ←No/No→ New. W:Add. Z:Discontinued. F:Interchangeable by set. K:Q'ty Change

Copyright (C) YANMAR CO., LTD. All RightsReserved.

Fig.24. PISTON

Fig. **24** PISTON

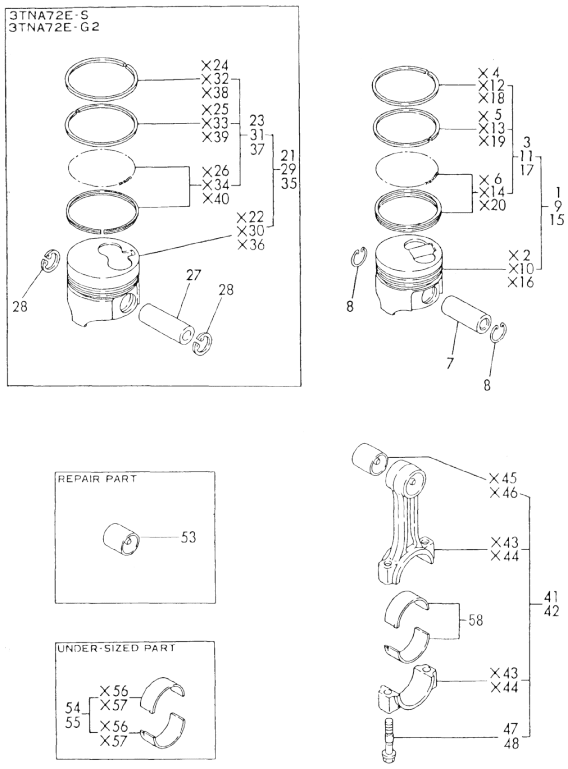

Remarks
(1) OVER-SIZED(O.S=0.25)PART.
(2) 0VER-SIZED(O.S=0.5)PART.
(3) REPAIR PART.
(4) UNDER-SIZED PART.

(A)=3TN66E-S
(B)=3TNA72E-S
(C)=3TN66E-G2
(D)=3TNA72E-G2
(E)=
(F)=

No.	Lev.	Parts No.	Description	Q'ty (A)	(B)	(C)	(D)	(E)	(F)	I	R
1	1	119270-22090	PISTON ASSY	3		3					
1-1	1	119270-22091	PISTON ASSY	3		3				N	
	(A=E09892)		(C=E09971)								
3	2	719270-22500	RING SET, PISTON	3		3					
3-1	2	719270-22501	RING SET, PISTON	3		3				N	
	(A=E09892)		(C=E09971)								
5-1	3	119270-22111	2ND RING, PISTON	3		3				N	
	(A=E09892)		(C=E09971)								
7	1	119260-22300	PIN, PISTON	3		3					
8	1	105225-22400	CIRCLIP	6		6					
9	1	719270-22820	PISTON ASSY, 0.25 OS	3		3					1
11	2	719270-22540	RING SET, 0.25 OS	3		3					1
11-1	2	719270-22541	RING SET, 0.25 OS	3		3				N	
	(A=E09892)		(C=E09971)								
15	1	119270-22920	PISTON ASSY, 0.50 OS	3		3					2
17	2	119270-22970	RING SET, 0.50 OS	3		3					2
21	1	119620-22090	PISTON ASSY		3		3				
23	2	719620-22500	RING SET, PISTON		3		3				
25-1	3	119620-22110	RING, PISTON		3		3			N	
		(B=E14948)	(D=E08933)								
27	1	119620-22300	PIN, PISTON		3		3				
28	1	22252-000210	RING, 21		6		6				
29	1	719620-22820	PISTON ASSY, 0.25 OS		3		3				1
31	2	719620-22540	RING SET, 0.25 OS		3		3				1
35	1	119620-22920	PISTON ASSY, 0.50 OS		3		3				2
37	2	119620-22970	RING SET, 0.50 OS		3		3				2
41	1	719260-23100	ROD ASSY, CONNECTING	3		3					
42	1	719620-23100	ROD ASSY, CONNECTING		3		3				
47	2	119260-23200	BOLT, CONNECTING ROD	6		6					
48	2	105225-23200	BOLT, CONNECTING ROD		6		6				
53	1	119260-23910	BEARING, PISTON PIN	1	1	1	1				3
53-1	1	119620-23910	BEARING, PISTON PIN		1		1			S	3
		(B=FROM 1ST)	(D=FROM 1ST)								
54	1	719260-23610	BEARING ASSY, 0.25	1		1					4
55	1	719620-23610	BEARING ASSY, 0.25		1		1				4
58	1	719260-23600	BEARING, CRANK PIN	3	3	3	3				

N:Old ←Yes/No→ New. Q:Old ←No/Yes→ New, R:Old ←Yes/Yes→ New, S:Old ←No/No→ New. W:Add. Z:Discontinued. F:Interchangeable by set. K:Q'ty Change

Copyright (C) YANMAR CO., LTD. All RightsReserved.

Fig.25. IDLE GEAR

Fig. 25 IDLE GEAR

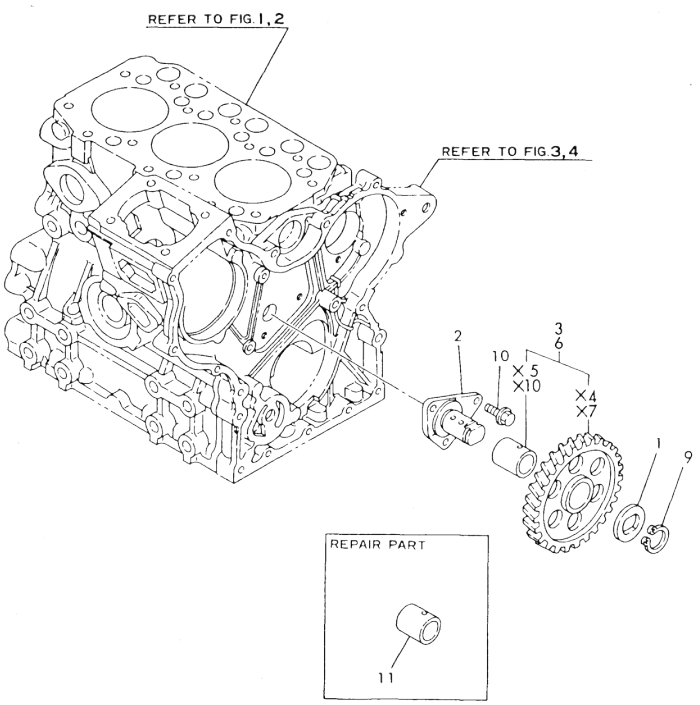

Remarks
(1) REPAIR PART.

(A)=3TN66E-S
(B)=3TNA72E-S
(C)=3TN66E-G2
(D)=3TNA72E-G2
(E)=
(F)=

No.	Lev.	Parts No.	Description	Q'ty (A)	(B)	(C)	(D)	(E)	(F)	I	R
1	1	119660-25022	RETAINER	1	1	1	1				
2	1	119660-25052	SHAFT, IDLE	1	1	1	1				
3	1	119260-25100	GEAR ASSY, IDLE	1		1					
6	1	119620-25102	GEAR ASSY, IDLE		1		1				
9	1	22242-000200	RING, 20	1	1	1	1				
10	1	26106-060122	BOLT, M6X 12 PLATED	3	3	3	3				
11	1	119620-25912	BUSH	1	1	1	1				1

N:Old ←Yes/No→ New. Q:Old ←No/Yes→ New. R:Old ←Yes/Yes→ New. S:Old ←No/No→ New. W:Add. Z:Discontinued. F:Interchangeable by set. K:Q'ty Change

Copyright (C) YANMAR CO., LTD. All RightsReserved.

Fig.26. LUBRICATING OIL PUMP

Fig. **26** LUB. OIL PUMP

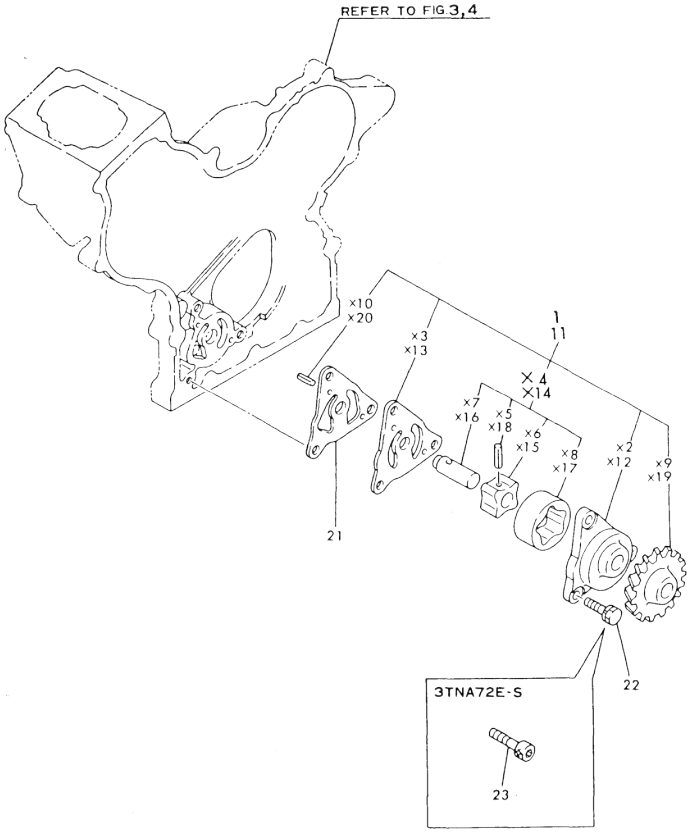

(A)=3TN66E-S
(B)=3TNA72E-S
(C)=3TN66E-G2
(D)=3TNA72E-G2
(E)=
(F)=

No.	Lev.	Parts No.	Description	Q'ty (A)	(B)	(C)	(D)	(E)	(F)	I	R
1	1	119260-32000	PUMP ASSY, OIL	1		1					
11	1	119660-32001	PUMP ASSY, OIL		1		1				
21	1	119660-32020	GASKET, PUMP	1	1	1	1				
22	1	26013-060202	BOLT, M6X 20	3		3					
22-1	1	26450-060202	BOLT, M6X 20	3		3				N	
	(A=E26502)		(C=E27264)								
23	1	26450-060202	BOLT, M6X 20		3		3				

N:Old ←Yes/No→ New. Q:Old ←No/Yes→ New. R:Old ←Yes/Yes→ New. S:Old ←No/No→ New. W:Add. Z:Discontinued. F:Interchangeable by set. K:Q'ty Change

Copyright (C) YANMAR CO., LTD. All RightsReserved.

Fig.27. DIPSTICK

Fig. 27 LUB. OIL DIPSTICK

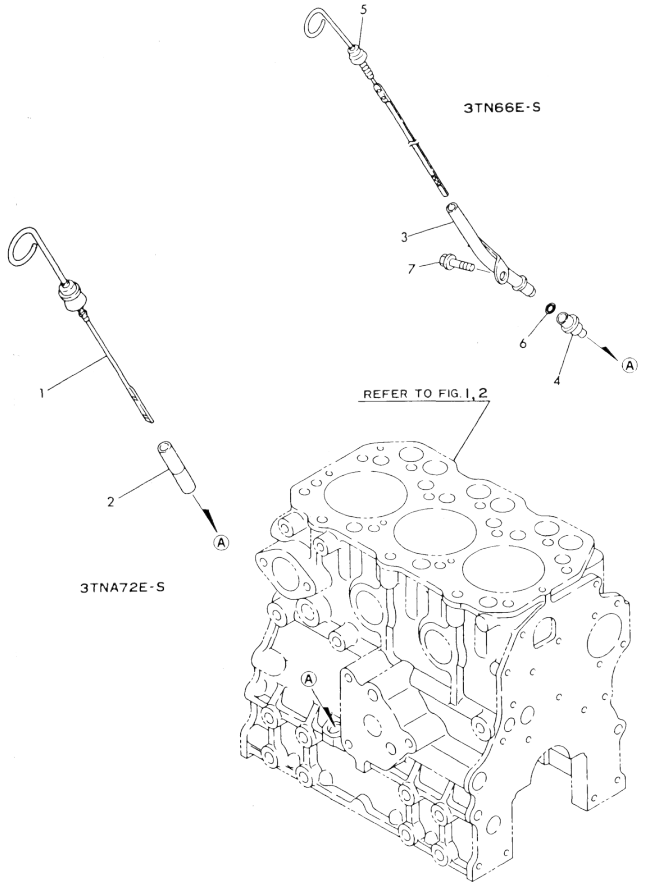

(A)=3TN66E-S
(B)=3TNA72E-S
(C)=3TN66E-G2
(D)=3TNA72E-G2
(E)=
(F)=

No.	Lev.	Parts No.	Description	Q'ty (A)	(B)	(C)	(D)	(E)	(F)	I	R
1A	1	119600-34800	DIPSTICK, OIL		1						
1B	1	119600-34820	DIPSTICK, OIL				1				
2	1	121520-34810	GUIDE, DIPSTICK		1		1				
3	1	119225-34810	GUIDE, DIPSTICK	1		1					
4	1	119260-34810	GUIDE, DIPSTICK	1		1					
5	1	119620-34822	DIPSTICK, OIL	1		1					
6	1	24311-240100	O-RING, 1AP10A	1		1					
7	1	26106-060102	BOLT, M6X 10 PLATED	1		1					

N:Old ←Yes/No→ New. Q:Old ←No/Yes→ New, R:Old ←Yes/Yes→ New. S:Old ←No/No→ New. W:Add. Z:Discontinued. F:Interchangeable by set. K:Q'ty Change

Copyright (C) YANMAR CO., LTD. All RightsReserved.

Fig.28. LUBRICATING OIL FILTER

Fig. 28 LUB. OIL STRAINER

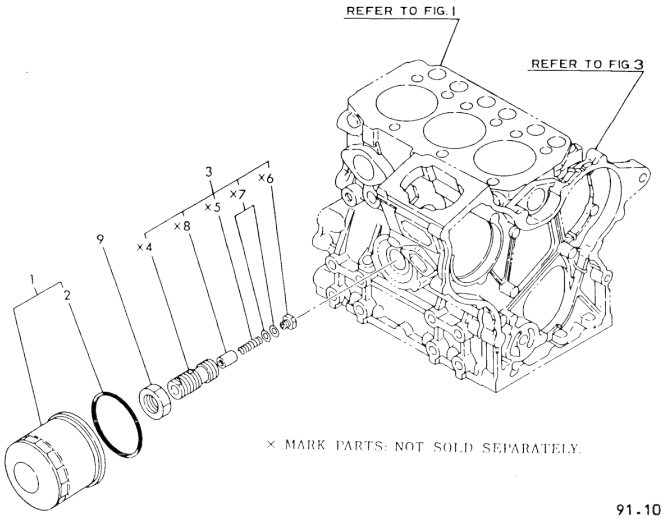

91.10.25

(A)=3TN66E-S
(B)=3TNA72E-S
(C)=3TN66E-G2
(D)=3TNA72E-G2
(E)=
(F)=

No.	Lev.	Parts No.	Description	Q'ty (A)	(B)	(C)	(D)	(E)	(F)	I	R
1	1	119660-35150	FILTER, LUB. OIL	1		1					
2	2	124450-35110	O-RING	1		1					
3	1	119225-35300	VALVE ASSY,OIL PRESS	1		1					
9	1	129150-35350	NUT	1		1					

N:Old ←Yes/No→ New. Q:Old ←No/Yes→ New, R:Old ←Yes/Yes→ New, S:Old ←No/No→ New, W:Add, Z:Discontinued, F:Interchangeable by set, K:Q'ty Change

Copyright (C) YANMAR CO., LTD. All RightsReserved.

Fig.29. LUBRICATING OIL FILTER

Fig. 29 LUB. OIL STRAINER

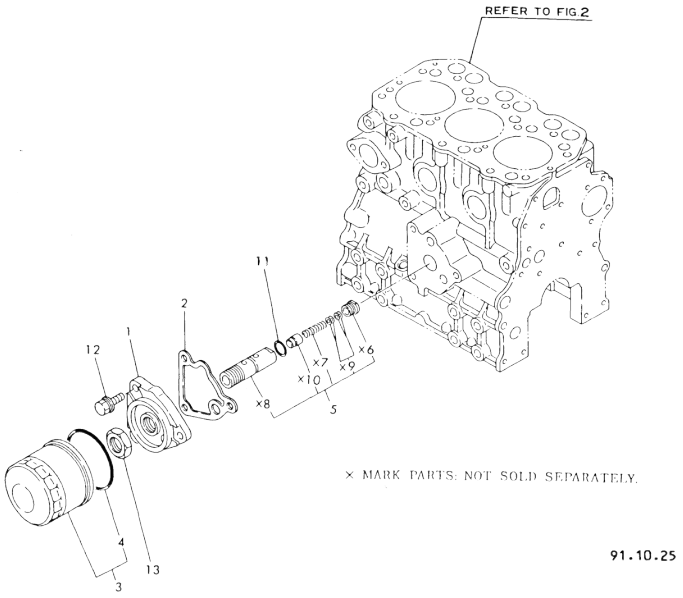

(A)=3TN66E-S
(B)=3TNA72E-S
(C)=3TN66E-G2
(D)=3TNA72E-G2
(E)=
(F)=

No.	Lev.	Parts No.	Description	Q'ty (A)	(B)	(C)	(D)	(E)	(F)	I	R
1	1	119660-35102	BRACKET, FILTER		1		1				
2	1	119660-35112	GASKET		1		1				
2-1	1	119660-35113	GASKET		1		1			N	
		(B=E43621)	(D=E37750)								
3	1	119660-35150	FILTER, LUB. OIL		1		1				
4	2	124450-35110	O-RING		1		1				
5	1	119660-35300	VALVE ASSY, CONTROL		1		1				
11	1	24311-000160	O-RING, 1AP16.0		1		1				
12	1	26106-080202	BOLT, M8X 20 PLATED		3		3				
13	1	129150-35350	NUT		1		1				

N:Old ←Yes/No→ New. Q:Old ←No/Yes→ New, R:Old ←Yes/Yes→ New. S:Old ←No/No→ New. W:Add. Z:Discontinued. F:Interchangeable by set. K:Q'ty Change

Copyright (C) YANMAR CO., LTD. All RightsReserved.

Fig.30. LUBRICATING OIL INTAKE PIPE

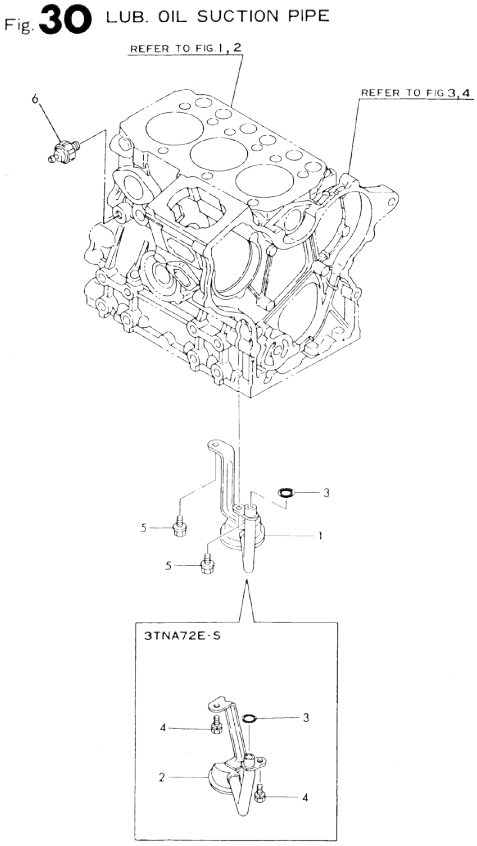

Remarks
(1) SIMULTANEOUS REPLACEMENT OF REF. NO.2-1 & FIG.7.REF.NO.5-1 ARE INTERCHANGEABLE.

(A)=3TN66E-S
(B)=3TNA72E-S
(C)=3TN66E-G2
(D)=3TNA72E-G2
(E)=
(F)=

No.	Lev.	Parts No.	Description	Q'ty (A)	(B)	(C)	(D)	(E)	(F)	I	R
1	1	119260-35081	PIPE, OIL INLET	1		1					
2	1	119600-35080	PIPE ASSY, OIL INLET		1		1				
2-1	1	119600-35081	PIPE ASSY, OIL INLET		1		1			F	1
		(B=E00583)	(D=E00581)								
2-2	1	119600-35091	PIPE ASSY, OIL INLET				1			N	
			(D=E00581)								
3	1	24311-000120	O-RING, 1AP12.0	1	1	1	1				
4	1	26106-060102	BOLT, M6X 10 PLATED		2		2				
5	1	26106-060122	BOLT, M6X 12 PLATED	2		2					
6	1	124160-39450	SWITCH, 0.5KG	1	1	1	1				

N:Old $\xleftarrow[\text{No}]{\text{Yes}}$ New. Q:Old $\xleftarrow[\text{Yes}]{\text{No}}$ New, R:Old $\xleftarrow[\text{Yes}]{\text{Yes}}$ New. S:Old $\xleftarrow[\text{No}]{\text{No}}$ New. W:Add. Z:Discontinued. F:Interchangeable by set. K:Q'ty Change

Copyright (C) YANMAR CO., LTD. All RightsReserved.

Fig.31. COOLING WATER PUMP

Fig. 31 COOLING WATER PUMP

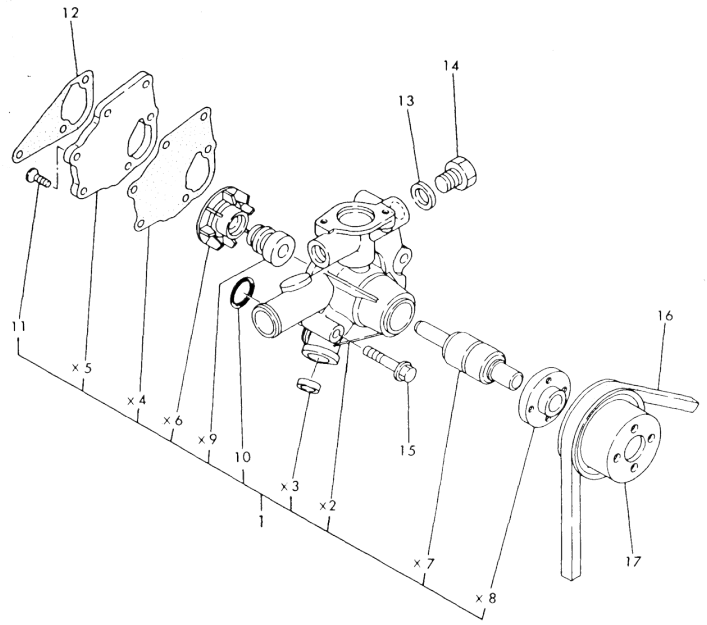

(A)=3TN66E-S (D)=3TNA72E-G2
(B)=3TNA72E-S (E)=
(C)=3TN66E-G2 (F)=

No.	Lev.	Parts No.	Description	Q'ty (A)	(B)	(C)	(D)	(E)	(F)	I	R
1	1	119260-42000	PUMP ASSY, WATER	1		1					
1-1	1	119260-42001	PUMP ASSY, WATER	1		1				N	
	(A=E25453)		(C=E25052)								
4-1	2	119260-42051	GASKET, WATER PUMP	1		1				N	
	(A=E25453)		(C=E25052)								
10	2	119225-42320	O-RING	1		1					
11	2	26577-060122	SCREW, M6X12	3		3					
12	1	119260-42020	GASKET, WATER PUMP	1		1					
13	1	23414-160021	GASKET, 16X1.0	1		1					
14	1	23887-160002	PLUG, 16	1		1					
14-1	1	121450-42450	PLUG, M16	1		1				N	
	(A=E09724)		(C=E09238)								
15	1	26106-080452	BOLT, M8X 45 PLATED	3		3					
16A	1	119256-42290	V-BELT, FM33.5			1					
16B	1	104514-42780	V-BELT, HM33	1							
17	1	119620-42350	V-PULLEY	1		1					

N:Old ◄Yes/No► New. Q:Old ◄No/Yes► New. R:Old ◄Yes/Yes► New. S:Old ◄No/No► New. W:Add. Z:Discontinued. F:Interchangeable by set. K:Q'ty Change

Copyright (C) YANMAR CO., LTD. All RightsReserved.

Fig.32. COOLING WATER PUMP

Fig. 32 COOLING WATER PUMP

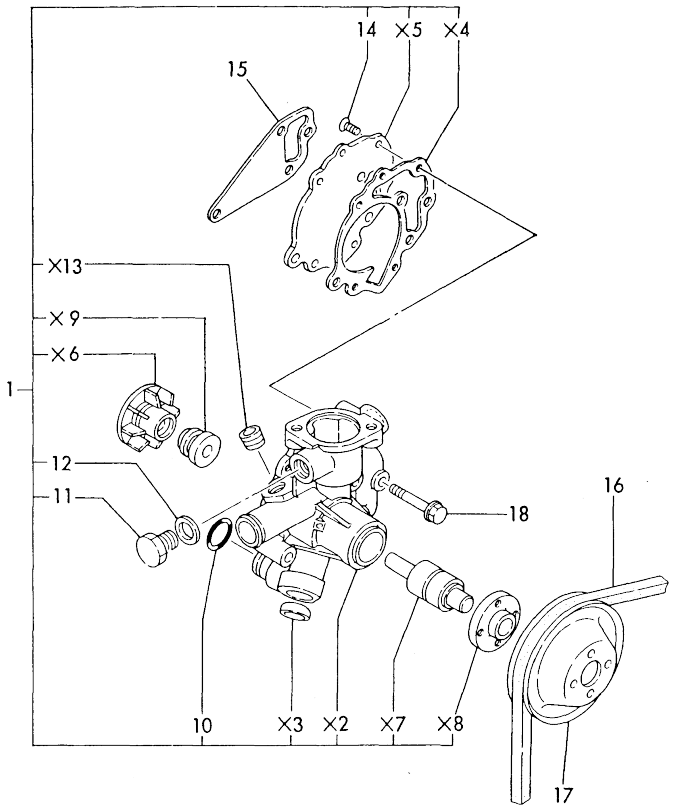

(A)=3TN66E-S (D)=3TNA72E-G2
(B)=3TNA72E-S (E)=
(C)=3TN66E-G2 (F)=

No.	Lev.	Parts No.	Description		Q'ty (A)	(B)	(C)	(D)	(E)	(F)	I	R
1	1	119660-42003	PUMP ASSY, WATER			1		1				
1-1	1	119660-42004	PUMP ASSY, WATER			1		1				N
		(B=E37750)		(D=E43621)								
10	2	119620-42320	O-RING			1		1				
11	2	121450-42450	PLUG, M16			1		1				Z
		(B=EXXX)		(D=EXXX)								
12	2	124465-44950	GASKET, 16			1		1				Z
		(B=EXXX)		(D=EXXX)								
13	2	23871-030000	PLUG, R03			1		1				
14	2	26577-060122	SCREW, M6X12			5		5				
15	1	119620-42020	GASKET, WATER PUMP			1		1				
16	1	119656-42290	V-BELT, FM35.5			1		1				
17	1	119656-42350	V-PULLEY			1		1				
17-1	1	119660-42350	V-PULLEY			1		1				S
		(B=E01154)		(D=E01486)								
18	1	26106-080452	BOLT, M8X 45 PLATED			4		4				

N:Old ←Yes/No→ New. Q:Old ←No/Yes→ New. R:Old ←Yes/Yes→ New. S:Old ←No/No→ New. W:Add. Z:Discontinued. F:Interchangeable by set. K:Q'ty Change

Copyright (C) YANMAR CO., LTD. All RightsReserved.

Fig.33. RADIATOR & COOLING FAN

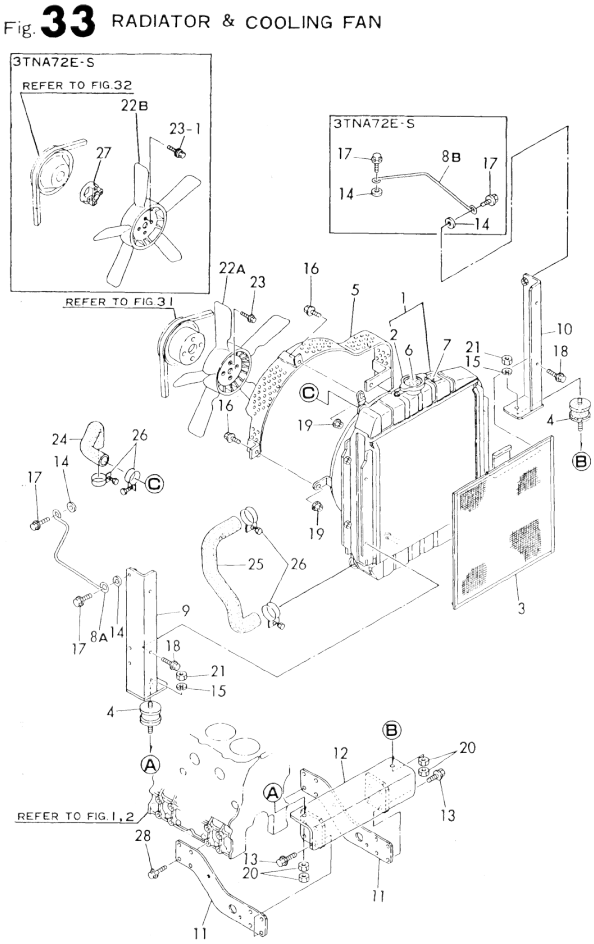

(A)=3TN66E-S
(B)=3TNA72E-S
(C)=3TN66E-G2
(D)=3TNA72E-G2
(E)=
(F)=

No.	Lev.	Parts No.	Description	Q'ty (A)	(B)	(C)	(D)	(E)	(F)	I	R
1A	1	119260-44500	RADIATOR	1							
1B	1	119600-44500	RADIATOR		1						
2	2	123682-44210	CAP, RADIATOR	1	1						
3A	1	121462-44580	SCREEN, RADIATOR	1							
3B	1	121150-44580	SCREEN, 345X345		1						
4	1	121400-44650	ABSORBER	2	2						
5A	1	119288-44760	GUARD	1							
5B	1	171301-44560	PROTECTOR, FAN		1						
5B-1	1	119888-44560	PROTECTOR, FAN		1						S
		(B=E01154)									
6	1	124764-44800	LABEL, RADIATOR	1		1					
7	1	124764-44920	LABEL, ANTI-FREEZING	1		1					
8A	1	119288-44940	RETAINER	1							
8B	1	119688-44940	RETAINER		1						
9A	1	119288-44970	SUPPORT, RADIATOR	1							
9B	1	119688-44970	SUPPORT, A		1						
10A	1	119288-44980	SUPPORT, RADIATOR	1							
10B	1	119688-44980	SUPPORT		1						
11	1	119288-44950	BRACKET, RADIATOR	2	2						
11-1	1	119688-44950	BRACKET	2	2						N
	(A=E01476)	(B=E01040)									
12A	1	119288-44960	BRACKET, RADIATOR	1							
12B	1	119688-44960	BRACKET		1						
13	1	26106-080252	BOLT, M8X 25 PLATED	8	8						
14	1	22137-080000	WASHER, 8	2	2						
15	1	22217-100000	WASHER, SPRING 10	2	2						
16	1	26106-080122	BOLT, M8X 12 PLATED	3	2						
17	1	26106-080162	BOLT, M8X 16 PLATED	2	2						
18	1	26106-080202	BOLT, M8X 20 PLATED	4	2						
19	1	26366-080002	NUT, M8	3	2						
20	1	26716-100002	NUT, M10	4	4						
21	1	26756-100002	NUT, LOCK M10	2	2						
22A	1	121023-44740	FAN, COOLING	1							
22B	1	124700-44740	FAN, COOLING 5X310		1						
23	1	26106-060122	BOLT, M6X 12 PLATED	4	4						
23-1	1	26014-060352	BOLT, M6X 35		4						S
		(B=E52499)									
24A	1	119288-49010	PIPE, WATER	1							W
	(A=E02137)										
24B	1	119288-49010	PIPE, WATER		1						
25	1	119280-49020	PIPE, WATER	1	1						W
	(A=E01476)										
26	1	23010-038000	CLAMP, 38	4	4						W
	(A=E01476)										
27	1	121267-44760	SPACER		1						W
		(B=E52499)									
28	1	26106-100302	BOLT, M10X 30 PLATED		8						W
		(B=EXXX)									

N:Old ←Yes/No→ New. Q:Old ←No/Yes→ New. R:Old ←Yes/Yes→ New. S:Old ←No/No→ New. W:Add. Z:Discontinued. F:Interchangeable by set. K:Q'ty Change

Copyright (C) YANMAR CO., LTD. All RightsReserved.

Fig.34. RADIATOR & COOLING FAN

Fig. 34 RADIATOR & COOLING FAN

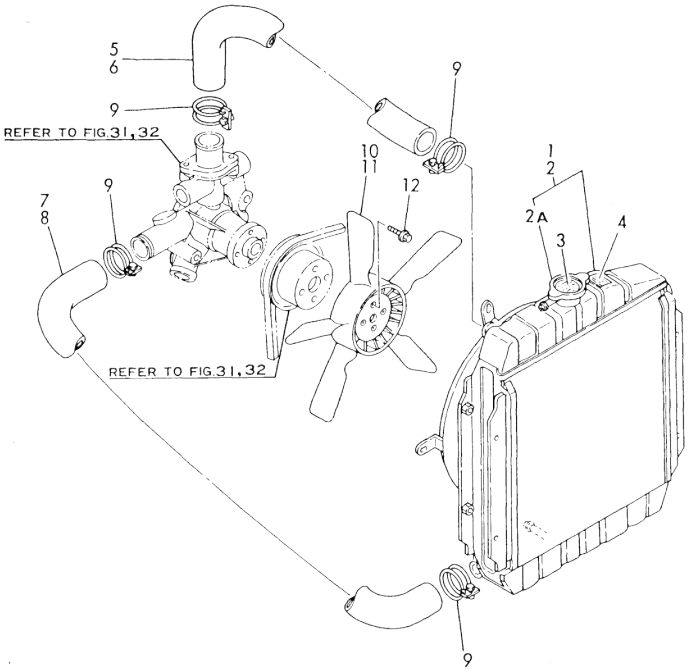

(A)=3TN66E-S
(B)=3TNA72E-S
(C)=3TN66E-G2
(D)=3TNA72E-G2
(E)=
(F)=

No.	Lev.	Parts No.	Description	Q'ty (A)	(B)	(C)	(D)	(E)	(F)	I	R
1	1	119260-44500	RADIATOR			1					
2	1	171002-44502	RADIATOR				1				
2A	2	123682-44210	CAP, RADIATOR			1	1				
3	1	124764-44800	LABEL			1	1				
4	1	124764-44920	LABEL, ANTI-FREEZING			1	1				
5	1	119288-49010	PIPE, WATER			1					
6	1	119688-49010	PIPE, WATER				1				
7	1	119280-49020	PIPE, WATER			1					
8	1	119645-49020	PIPE, WATER				1				
9	1	23010-038000	CLAMP, 38			4	4				
10	1	121023-44740	FAN, COOLING			1					
11	1	124700-44740	FAN, COOLING 5X310				1				
12	1	26106-060122	BOLT, M6X 12 PLATED			1					
12-1	1	26014-060162	BOLT, M6X 16 (C=EXXX) (D=EXXX)			4	4				N

N:Old ←Yes/No→ New. Q:Old ←No/Yes→ New. R:Old ←Yes/Yes→ New. S:Old ←No/No→ New. W:Add. Z:Discontinued. F:Interchangeable by set. K:Q'ty Change

Copyright (C) YANMAR CO., LTD. All RightsReserved.

Fig.35. THERMOSTAT

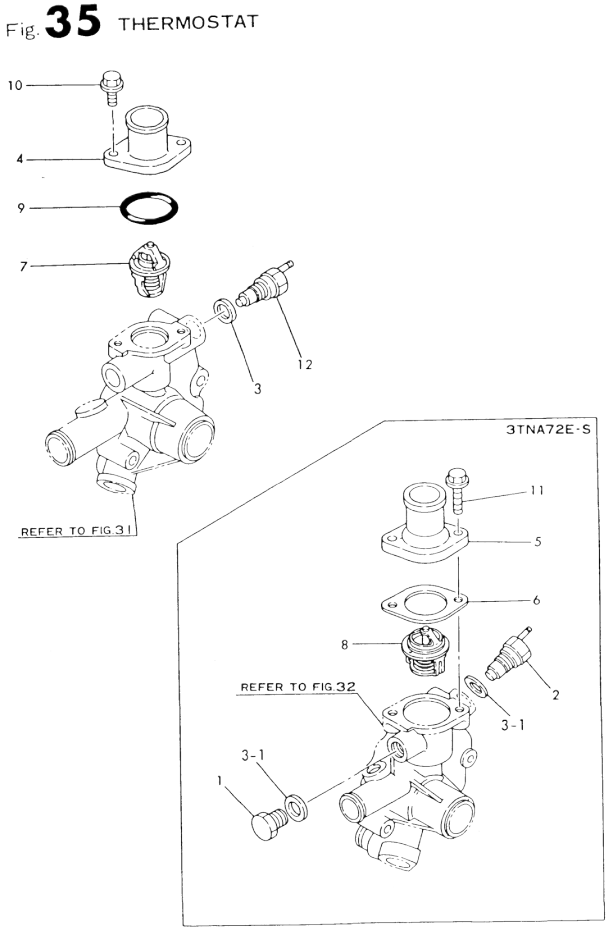

(A)=3TN66E-S
(B)=3TNA72E-S
(C)=3TN66E-G2
(D)=3TNA72E-G2
(E)=
(F)=

No.	Lev.	Parts No.	Description	Q'ty (A)	(B)	(C)	(D)	(E)	(F)	I	R
1	1	121450-42450	PLUG, M16		1		1				
2	1	121250-44901	SWITCH, 110		1		1				
3	1	124465-44950	GASKET, 16		1		1				
3-1	1	124465-44950	GASKET, 16		2		2			K	
		(B=EXXX)	(D=EXXX)								
4	1	119260-49530	COVER, THERMOSTAT	1		1					
5	1	129350-49530	COVER, THERMOSTAT		1		1				
6	1	129350-49540	GASKET		1		1				
6-1	1	129350-49541	GASKET		1		1			R	
		(B=E43621)	(D=E37751)								
7	1	119260-49800	THERMOSTAT, 71	1		1					
8	1	129350-49800	THERMOSTAT, 71		1		1				
9	1	24321-000350	O-RING, 1AG35.0	1		1					
10	1	26106-060182	BOLT, M6X 18 PLATED	2		2					
11	1	26106-080202	BOLT, M8X 20 PLATED		2		2				
12	1	121250-44901	SWITCH, 110	1		1					

N:Old ←Yes/No→ New. Q:Old ←No/Yes→ New. R:Old ←Yes/Yes→ New. S:Old ←No/No→ New. W:Add. Z:Discontinued. F:Interchangeable by set. K:Q'ty Change

Copyright (C) YANMAR CO., LTD. All RightsReserved.

Fig.36. COOLING WATER DRAIN

Fig. 36 COOLING WATER LINE

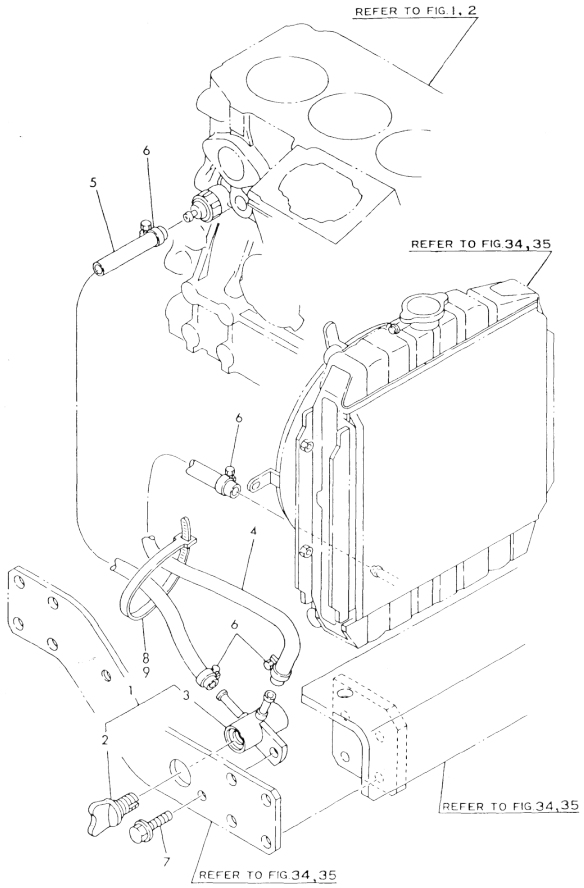

(A)=3TN66E-S (B)=3TNA72E-S (C)=3TN66E-G2 (D)=3TNA72E-G2 (E)= (F)=

No.	Lev.	Parts No.	Description	Q'ty (A)	(B)	(C)	(D)	(E)	(F)	I	R
1	1	129150-49100	COCK ASSY, 3-WAY	1	1	1	1				
2	2	129150-49080	COCK, DRAIN	1	1	1	1				
3	2	129150-49090	BODY, 3-WAY COCK	1	1	1	1				
4	1	121023-49150	PIPE, DRAIN L=165	1	1						
5	1	121750-49150	PIPE, WATER DRAIN	1	1						
6	1	124766-59050	CLIP, HOSE 12	4	4						
7	1	26106-080162	BOLT, M8X 16 PLATED	1	1						
8	1	129301-01650	CLAMP, PIPE	1	1						
8-1	1	121750-59890	BAND, 140	1	1					N	
	(A=E03686)	(B=E02649)									
9	1	121750-59890	BAND, 140			1	1			W	
			(C=E03973) (D=E02936)								

N:Old ←Yes/No→ New. Q:Old ←No/Yes→ New. R:Old ←Yes/Yes→ New. S:Old ←No/No→ New. W:Add. Z:Discontinued. F:Interchangeable by set. K:Q'ty Change

Copyright (C) YANMAR CO., LTD. All RightsReserved.

Fig.37. FUEL INJECTION PUMP

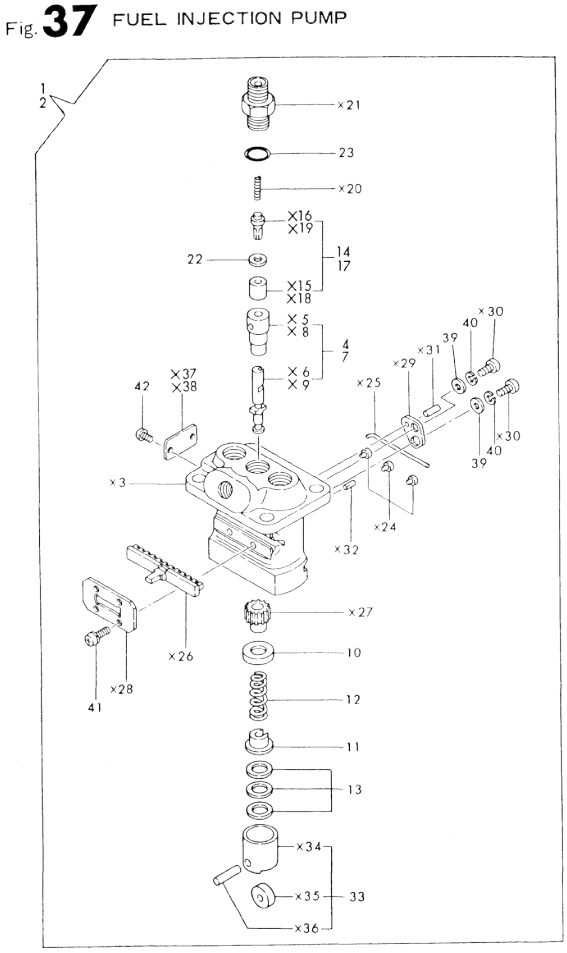

(A)=3TN66E-S
(B)=3TNA72E-S
(C)=3TN66E-G2
(D)=3TNA72E-G2
(E)=
(F)=

No.	Lev.	Parts No.	Description	Q'ty (A)	(B)	(C)	(D)	(E)	(F)	I	R
1	1	719225-51100	PUMP ASSY, INJECTION	1		1					
2	1	719621-51100	PUMP ASSY, INJECTION		1		1				
4	2	119225-51100	PLUNGER ASSY	3		3					
7	2	119620-51101	PLUNGER ASSY		3		3				
10	2	119620-51170	RETAINER, SPRING A	3	3	3	3				
11	2	119620-51180	RETAINER, SPRING B	3	3	3	3				
12	2	119620-51190	SPRING, PLUNGER	3	3	3	3				
13	2	119620-51250	SHIM SET	3	3	3	3				
14	2	119225-51300	VALVE ASSY, DELIVERY	3		3					
17	2	119620-51300	VALVE ASSY, DELIVERY		3		3				
22	2	119620-51350	GASKET	3	3	3	3				
23	2	119620-51370	O-RING	3	3	3	3				
33	2	119620-51700	TAPPET ASSY	3	3	3	3				
39	2	22137-040000	WASHER, 4	2	2	2	2				
40	2	22217-040000	WASHER, SPRING 4	2	2	2	2				
41	2	26022-040082	SCREW, M4X 8	4	4	4	4				
42	2	26587-040102	SCREW, M4X10	2	2	2	2				

N:Old ◄Yes/No► New. Q:Old ◄No/Yes► New, R:Old ◄Yes/Yes► New, S:Old ◄No/No► New. W:Add. Z:Discontinued. F:Interchangeable by set. K:Q'ty Change

Copyright (C) YANMAR CO., LTD. All RightsReserved.

Fig.38. FUEL INJECTION VALVE

Fig. **38** FUEL INJECTION VALVE

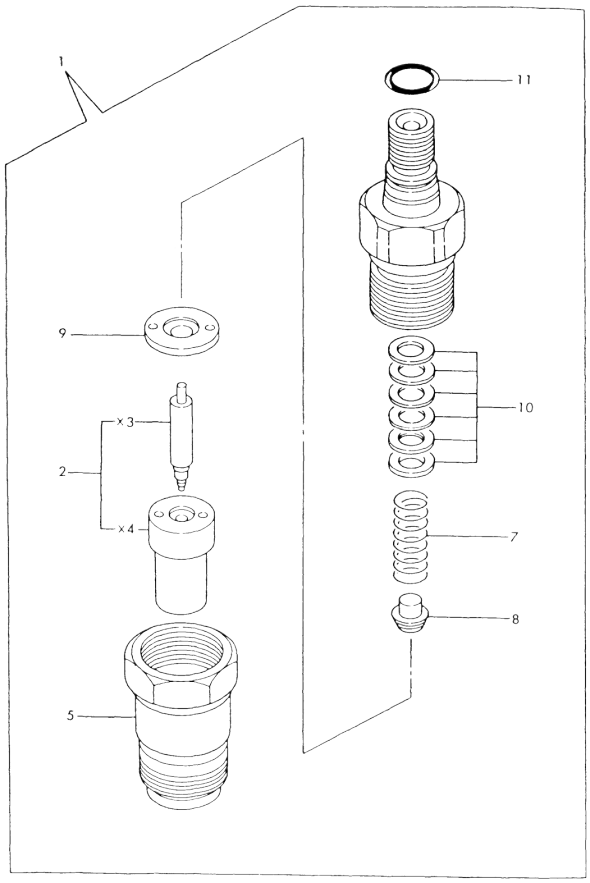

(A)=3TN66E-S
(B)=3TNA72E-S
(C)=3TN66E-G2
(D)=3TNA72E-G2
(E)=
(F)=

No.	Lev.	Parts No.	Description	Q'ty (A)	(B)	(C)	(D)	(E)	(F)	I	R
1	1	719620-53100	VALVE ASSY,INJECTION	3	3	3	3				
2	2	119620-53000	VALVE ASSY,INJECTION	3	3	3	3				
5	2	119620-53080	NUT, NOZZLE	3	3	3	3				
7	2	119620-53120	SPRING, NOZZLE	3	3	3	3				
8	2	114250-53130	SEAT, SPRING	3	3	3	3				
9	2	119620-53140	SPACER, VALVE STOP	3	3	3	3				
10	2	114250-53400	SHIM SET	3	3	3	3				
11	2	129155-61830	O-RING, S10	3	3	3	3				

N:Old ◄Yes/No► New. Q:Old ◄No/Yes► New, R:Old ◄Yes/Yes► New, S:Old ◄No/No► New, W:Add, Z:Discontinued, F:Interchangeable by set, K:Q'ty Change

Copyright (C) YANMAR CO., LTD. All RightsReserved.

Fig.39. FUEL FILTER

Fig. 39 FUEL STRAINER

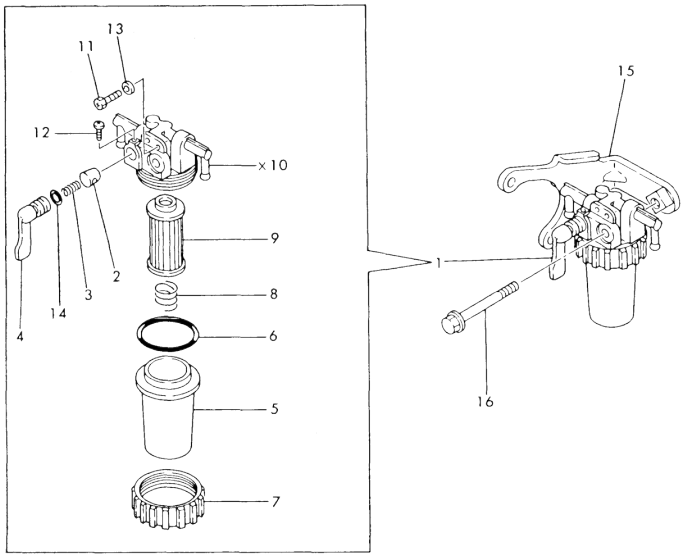

(A)=3TN66E-S (D)=3TNA72E-G2
(B)=3TNA72E-S (E)=
(C)=3TN66E-G2 (F)=

No.	Lev.	Parts No.	Description	Q'ty (A)	(B)	(C)	(D)	(E)	(F)	I	R
1	1	171059-55600	FILTER ASSY, FUEL	1	1	1	1				
2	2	104200-55321	VALVE, TAPER	1	1	1	1				
3	2	104200-55330	SPRING, VALVE	1	1	1	1				
4	2	104200-55341	HANDLE	1	1	1	1				
5	2	121254-55510	COVER	1	1	1	1				
6	2	102103-55520	O-RING	1	1	1	1				
7	2	110250-55610	RING, RETAINING	1	1	1	1				
8	2	121250-55620	SPRING	1	1	1	1				
9	2	124550-55700	FILTER, FUEL L=90	1	1	1	1				
11	2	101720-55750	PLUG, 6	2	2	2	2				
12	2	104200-55750	SCREW, M4	1	1	1	1				
13	2	23418-060000	GASKET, 6X1.0	2	2	2	2				
14	2	24311-240100	O-RING, 1AP10A	1	1	1	1				
15	1	119288-55900	BRACKET, FILTER	1	1	1	1				
16	1	26106-080652	BOLT, M8X 65 PLATED	1	1	1	1				
16-1	1	26014-080702	BOLT, M8X 70	1		1					R
	(A=E17657)		(C=E16975)								

N:Old ←Yes/No→ New. Q:Old ←No/Yes→ New. R:Old ←Yes/Yes→ New. S:Old ←No/No→ New. W:Add. Z:Discontinued. F:Interchangeable by set. K:Q'ty Change

Copyright (C) YANMAR CO., LTD. All RightsReserved.

Fig.40. FUEL INJECTION PIPE

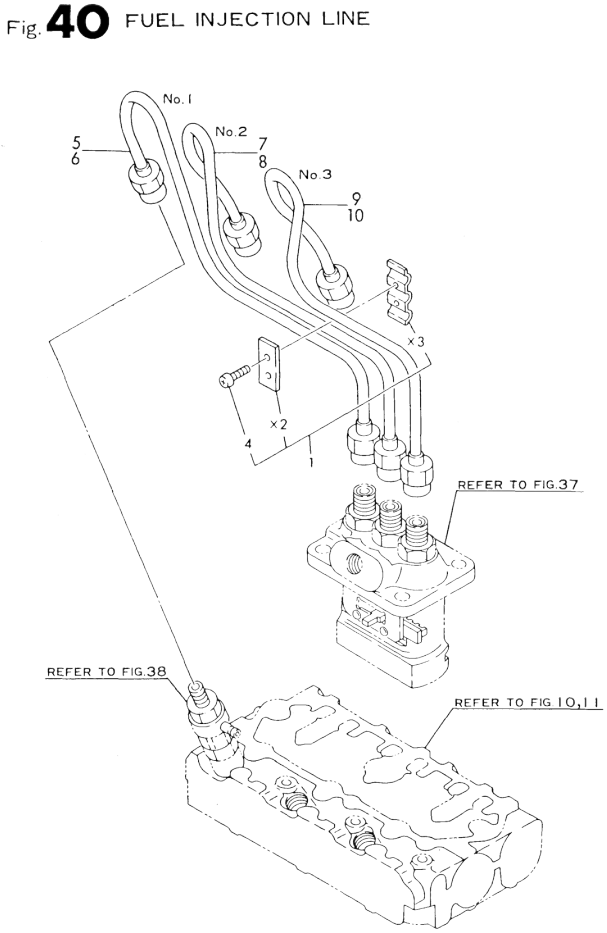

(A)=3TN66E-S (D)=3TNA72E-G2
(B)=3TNA72E-S (E)=
(C)=3TN66E-G2 (F)=

No.	Lev.	Parts No.	Description		Q'ty (A)	(B)	(C)	(D)	(E)	(F)	I	R
1	1	129150-59120	RETAINER, PIPE		1	1	1	1				
4	2	129150-59130	BOLT, M4X12		2	2	2	2				
5	1	119260-59810	PIPE ASSY, INJECTION		1		1					
5-1	1	119225-59810	PIPE ASSY, INJECTION		1		1					R
	(A=E11148)			(C=E10954)								
6	1	119620-59810	PIPE ASSY, INJECTION			1		1				
6-1	1	119620-59811	PIPE ASSY, INJECTION			1		1				R
		(B=E14948)		(D=E16137)								
7	1	119260-59820	PIPE ASSY, INJECTION		1		1					
8	1	119620-59820	PIPE ASSY, INJECTION			1		1				
8-1	1	119620-59821	PIPE ASSY, INJECTION			1		1				R
		(B=E14948)		(D=E16137)								
9	1	119260-59830	PIPE ASSY, INJECTION		1		1					
10	1	119620-59830	PIPE ASSY, INJECTION			1		1				
10-1	1	119620-59831	PIPE ASSY, INJECTION			1		1				R
		(B=E14948)		(D=E16137)								

N:Old ←Yes/No→ New. Q:Old ←No/Yes→ New. R:Old ←Yes/Yes→ New. S:Old ←No/No→ New. W:Add. Z:Discontinued. F:Interchangeable by set. K:Q'ty Change

Copyright (C) YANMAR CO., LTD. All RightsReserved.

Fig.41. FUEL LINE

Fig. 41 FUEL LINE

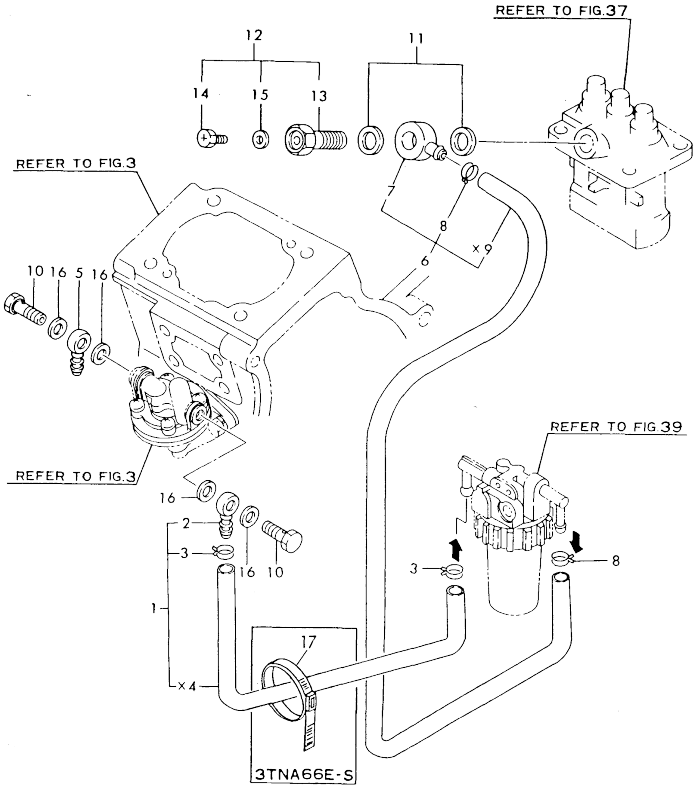

(A)=3TN66E-S
(B)=3TNA72E-S
(C)=3TN66E-G2
(D)=3TNA72E-G2
(E)=
(F)=

No.	Lev.	Parts No.	Description	Q'ty (A)	(B)	(C)	(D)	(E)	(F)	I	R
1	1	119260-59020	PIPE ASSY, D12XL400	1		1					
2	2	104264-59030	JOINT, PIPE 8	1		1					
3	2	124766-59050	CLIP, HOSE 12	2		2					
5	1	104264-59030	JOINT, PIPE 8	1		1					
6	1	119260-59030	PIPE, FUEL	1		1					
7	2	101304-59020	JOINT, PIPE 12	1		1					
8	2	124766-59050	CLIP, HOSE 12	2		2					
10	1	105582-59150	BOLT, PIPE JOINT	2		2					
11	1	104200-59170	GASKET, 12	2		2					
12	1	103854-59191	BOLT ASSY, JOINT M12	1		1					
13	2	103854-59201	BOLT, PIPE JOINT M12	1		1					
14	2	124060-59380	PLUG, 6	1		1					
15	2	43400-500390	SEAL WASHER 6	1		1					
16	1	23414-080012	GASKET, 8X1.0	4		4					
17	1	121750-59890	BAND, 140	1						W	

(A=E03686)

N:Old ←Yes/No→ New. Q:Old ←No/Yes→ New. R:Old ←Yes/Yes→ New. S:Old ←No/No→ New. W:Add. Z:Discontinued. F:Interchangeable by set. K:Q'ty Change

Copyright (C) YANMAR CO., LTD. All RightsReserved.

Fig.42. FUEL LINE

Fig. 42 FUEL LINE

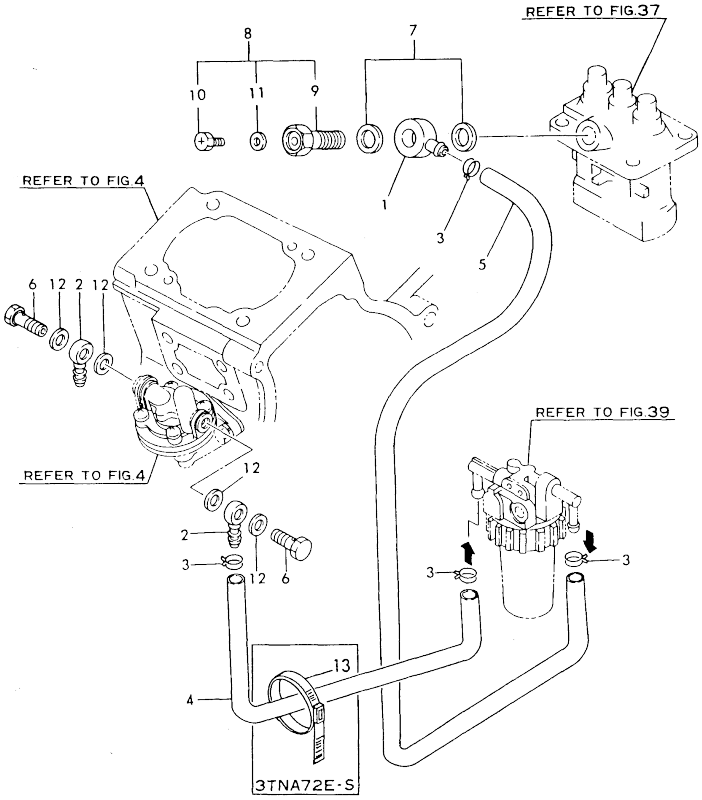

(A)=3TN66E-S
(B)=3TNA72E-S
(C)=3TN66E-G2
(D)=3TNA72E-G2
(E)=
(F)=

No.	Lev.	Parts No.	Description	Q'ty (A)	(B)	(C)	(D)	(E)	(F)	I	R
1	1	101304-59020	JOINT, PIPE 12		1		1				
2	1	104264-59030	JOINT, PIPE 8		2		2				
3	1	124766-59050	CLIP, HOSE 12		4		4				
4	1	121236-59080	PIPE, FUEL D12X400		1		1				
5	1	124160-59080	PIPE, FUEL D12X220		1		1				
6	1	105582-59150	BOLT, PIPE JOINT		2		2				
7	1	104200-59170	GASKET, 12		2		2				
8	1	103854-59191	BOLT ASSY, JOINT M12		1		1				
9	2	103854-59201	BOLT, PIPE JOINT M12		1		1				
10	2	124060-59380	PLUG, 6		1		1				
11	2	43400-500390	SEAL WASHER 6		1		1				
12	1	23414-080012	GASKET, 8X1.0		4		4				
13	1	121750-59890	BAND, 140		1					W	
	(A=E03686)										

N:Old ←Yes/No→ New. Q:Old ←No/Yes→ New. R:Old ←Yes/Yes→ New. S:Old ←No/No→ New. W:Add. Z:Discontinued. F:Interchangeable by set. K:Q'ty Change

Copyright (C) YANMAR CO., LTD. All RightsReserved.

Fig.43. FUEL RETURN PIPE

Fig. 43 FUEL RETURN LINE

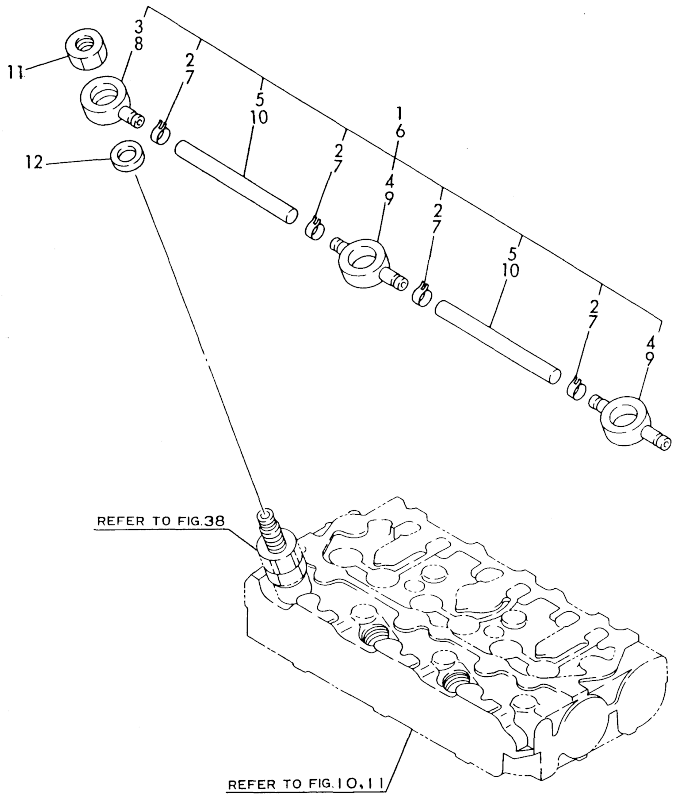

(A)=3TN66E-S
(B)=3TNA72E-S
(C)=3TN66E-G2
(D)=3TNA72E-G2
(E)=
(F)=

No.	Lev.	Parts No.	Description	Q'ty (A)	(B)	(C)	(D)	(E)	(F)	I	R
1	1	119260-59540	PIPE ASSY, RETURN	1		1					
2	2	124066-59100	CLIP, HOSE 8	4		4					
3	2	119260-59520	JOINT	1		1					
4	2	119260-59530	JOINT	2		2					
5	2	119260-59550	PIPE, FUEL	2		2					
6	1	119620-59540	PIPE ASSY, FUEL		1		1				
7	2	124066-59100	CLIP, HOSE 8		4		4				
8	2	129155-59520	JOINT		1		1				
8-1	2	119260-59520	JOINT		1		1				N
		(B=E14948)	(D=E13024)								
9	2	129155-59530	JOINT		2		2				
9-1	2	119260-59530	JOINT		2		2				N
		(B=E14948)	(D=E13024)								
10	2	105025-59550	PIPE, FUEL RETURN		2		2				
11	1	119620-59700	NUT, NOZZLE	3	3	3	3				
12	1	23414-140000	GASKET, 14X1.0	3	3	3	3				

N:Old ←Yes/No→ New. Q:Old ←No/Yes→ New. R:Old ←Yes/Yes→ New. S:Old ←No/No→ New. W:Add. Z:Discontinued. F:Interchangeable by set. K:Q'ty Change

Copyright (C) YANMAR CO., LTD. All RightsReserved.

Fig.44. GOVERNOR

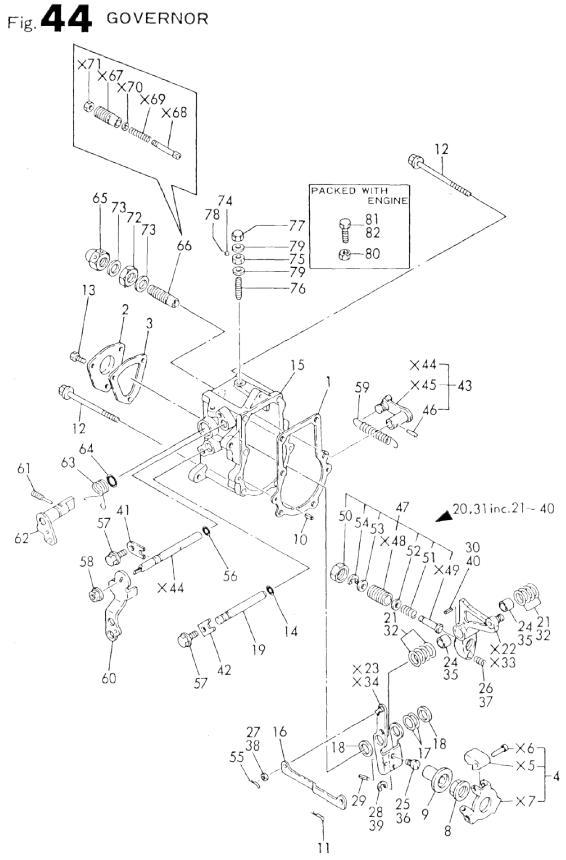

Remarks
(1) SELECTIVE PARTS : CERTAIN THE CLASSIFICATION MARK, THEN PLACE YOUR ORDER. (ILLUSTRATION)

(A)=3TN66E-S (B)=3TNA72E-S (C)=3TN66E-G2 (D)=3TNA72E-G2 (E)= (F)=

No.	Lev.	Parts No.	Description	Q'ty (A)	(B)	(C)	(D)	(E)	(F)	I	R
1	1	119660-61051	GASKET	1	1	1	1				
1-1	1	119660-61052	GASKET	1	1	1	1			N	
	(A=E23030)	(B=E43621)	(C=E23602) (D=E37750)								
2	1	119660-61060	COVER, GOVERNOR CASE	1	1	1	1				
3	1	119660-61070	GASKET	1	1	1	1				
3-1	1	119660-61071	GASKET	1	1	1	1			N	
	(A=E23030)	(B=E43621)	(C=E23602) (D=E37750)								
4	1	119600-61200	WEIGHT ASSY,GOVERNOR	1	1	1	1				
8	1	119660-61300	NUT	1	1	1	1				
9	1	119660-61341	SLEEVE	1	1	1	1				
10	1	22351-040010	PIN, SPRING 4.0X10	2	2	2	2				
11	1	22360-060000	PIN, SNAP 6	1	1	1	1				
12	1	26106-060702	BOLT, M6X 70 PLATED	6	6	6	6				
13	1	26116-050102	BOLT, M5X 10 PLATED	3	3	3	3				
14	1	129155-51280	O-RING, S6	1	1	1	1				
15	1	119660-61013	CASE, GOVERNOR	1	1	1	1				
16	1	119660-61121	LINK, NO MARK	1	1	1	1				1
16A	1	119660-61140	LINK, MARK :2	1	1	1	1			W	1
	(A=E14053)	(B=E17007)	(C=E11904) (D=E17064)								
16B	1	119660-61150	LINK, MARK :3	1	1	1	1			W	1
	(A=E14053)	(B=E17007)	(C=E11904) (D=E17064)								
17	1	119660-61460	SHIM SET	1	1	1	1				
18	1	129155-61480	SPACER ASSY	2	2	2	2				
19	1	119660-61491	SHAFT	1	1	1	1				
20	1	119600-61500	LEVER ASSY, GOVERNOR	1		1					
20-1	1	119656-61500	LEVER ASSY, GOVERNOR	1		1				S	
	(A=E07809)		(C=E06944)								
21	2	174307-51700	SHIM SET	2		2					
24	2	129155-61530	BUSH	2		2					
24-1	2	121450-61520	BEARING, NEEDLE 8	2		2				S	
	(A=E00483)		(C=E00531)								
25	2	119600-61540	SHIFTER	1		1					
26	2	119600-61650	SPRING, STARTING	1		1					
26-1	2	119660-61651	SPRING, STARTING	1		1				S	
	(A=E07809)		(C=E06944)								
27	2	22117-040000	WASHER, 4	1		1					
28	2	22272-000040	RING, E- 4	1		1					
29	2	22351-020004	PIN, SPRING 2.0X 4	1		1					
30	2	22351-030014	PIN, SPRING 3.0X14	1		1					
31	1	119660-61501	LEVER ASSY, GOVERNOR		1		1				
31-1	1	119656-61500	LEVER ASSY, GOVERNOR		1		1			S	
		(B=E14948)	(D=E06154)								
32	2	174307-51700	SHIM SET		2		2				
35	2	129155-61530	BUSH		2		2				
35-1	2	121450-61520	BEARING, NEEDLE 8		2		2			S	
		(B=E00583)	(D=E00581)								
36	2	129155-61540	SHIFTER		1		1				
36-1	2	119600-61540	SHIFTER		1		1			S	
		(B=E14948)	(D=E06154)								
37	2	119660-61651	SPRING, STARTING		1		1				
38	2	22117-040000	WASHER, 4		1		1				

N:Old ←Yes/No→ New. Q:Old ←No/Yes→ New. R:Old ←Yes/Yes→ New. S:Old ←No/No→ New. W:Add. Z:Discontinued. F:Interchangeable by set. K:Q'ty Change

++ CONTINUE ++

Copyright (C) YANMAR CO., LTD. All RightsReserved.

Fig.44. GOVERNOR

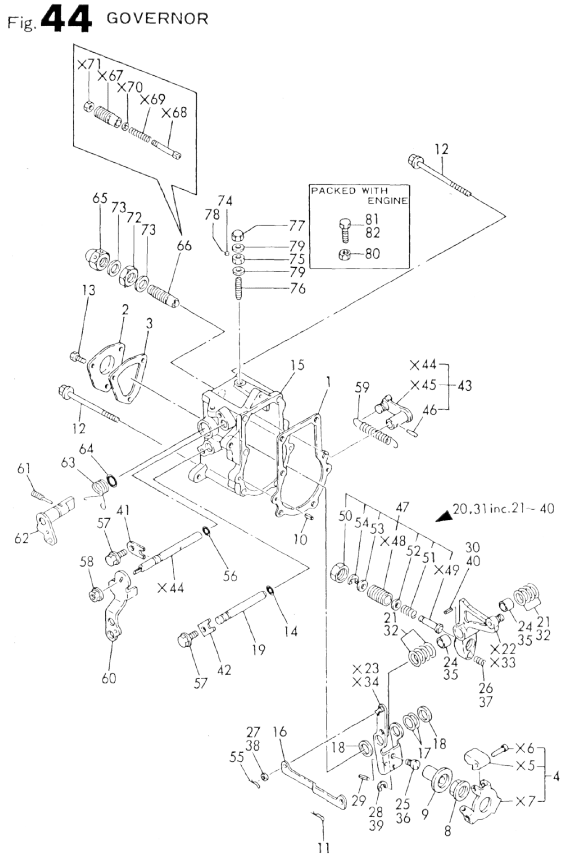

Remarks
(1) SELECTIVE PARTS : CERTAIN THE CLASSIFICATION MARK, THEN PLACE YOUR ORDER. (ILLUSTRATION)

(A)=3TN66E-S (D)=3TNA72E-G2
(B)=3TNA72E-S (E)=
(C)=3TN66E-G2 (F)=

No.	Lev.	Parts No.	Description	Q'ty (A)	(B)	(C)	(D)	(E)	(F)	I	R
39	2	22272-000040	RING, E- 4		1		1				
40	2	22351-030014	PIN, SPRING 3.0X14		1		1				
40A	2	22351-020004	PIN, SPRING 2.0X 4		1		1				W
		(B=E14948)	(D=E06154)								
41	1	119600-61900	RETAINER, SHAFT	1	1	1	1				
42	1	119660-61901	RETAINER, SHAFT	1	1	1	1				
43	1	119621-66091	SHAFT ASSY	1	1	1	1				
46	2	22322-030160	PIN, TAPER 3X16	1	1	1	1				
47	1	119600-66720	ANGLEICH ASSY	1	1	1	1				
50	1	129155-61590	NUT, LOCK	1	1	1	1				
51	2	129156-61600	SPRING, ANGLEIGH	1	1	1	1				
52	2	129555-61800	SHIM SET	1	1	1	1				
53	2	22117-050000	WASHER, 5	1	1	1	1				
54	2	22272-000040	RING, E- 4	1	1	1	1				
55	1	22360-040000	PIN, SNAP 4	1	1	1	1				
56	1	24341-000070	O-RING, 1AS7.0	1	1	1	1				
57	1	26106-060102	BOLT, M6X 10 PLATED	2	2	2	2				
58	1	194990-22050	NUT, M8	1	1	1	1				
59	1	119600-66020	SPRING, REGULATOR	1	1	1	1				
60	1	119621-66051	LEVER, REGULATOR	1	1	1	1				
61	1	124250-03640	SCREW	1	1	1	1				
62	1	119600-66521	HANDLE, STOP	1	1	1	1				
63	1	119600-66681	SPRING, RETURN	1	1	1	1				
64	1	24311-240100	O-RING, 1AP10A	1	1	1	1				
65	1	129100-61930	NUT, CAP	1	1	1	1				
66A	1	119260-66540	LIMITER ASSY, FUEL			1					
66B	1	119600-66530	LIMITER ASSY, FUEL	1	1		1				
72	1	124772-66750	NUT, LOCK M12	1	1	1	1				
73	1	43400-500450	SEAL WASHER 12	2	2	2	2				
74	1	135210-61090	LEAD	1	1	1	1				
75	1	124550-66370	NUT, M6	1	1	1	1				
76	1	119660-66830	SCREW	1	1	1	1				
76-1	1	121575-66830	SCREW	1	1	1	1				N
	(A=E14053)	(B=E17795)	(C=E13198) (D=E18549)								
77	1	119600-66840	NUT, CAP	1	1	1	1				
78	1	22451-060000	WIRE, 0.6	1	1	1	1				
79	1	43400-500400	SEAL WASHER 6	2	2	2	2				
80	1	26756-060002	NUT, LOCK M6			1	1				W
			(C=E13198) (D=E18549)								
81	1	26116-060304	BOLT, M6X 30 PLATED				1				R
			(D=E01486)								
82	1	26116-060302	BOLT, M6X 30 PLATED			1					W
			(C=EXXX)								

N:Old ←Yes/No→ New. Q:Old ←No/Yes→ New. R:Old ←Yes/Yes→ New. S:Old ←No/No→ New. W:Add. Z:Discontinued. F:Interchangeable by set. K:Q'ty Change

Copyright (C) YANMAR CO., LTD. All RightsReserved.

Fig.45. ENGINE CONTROL DEVICE

Fig. 45 ENGINE CONTROL DEVICE

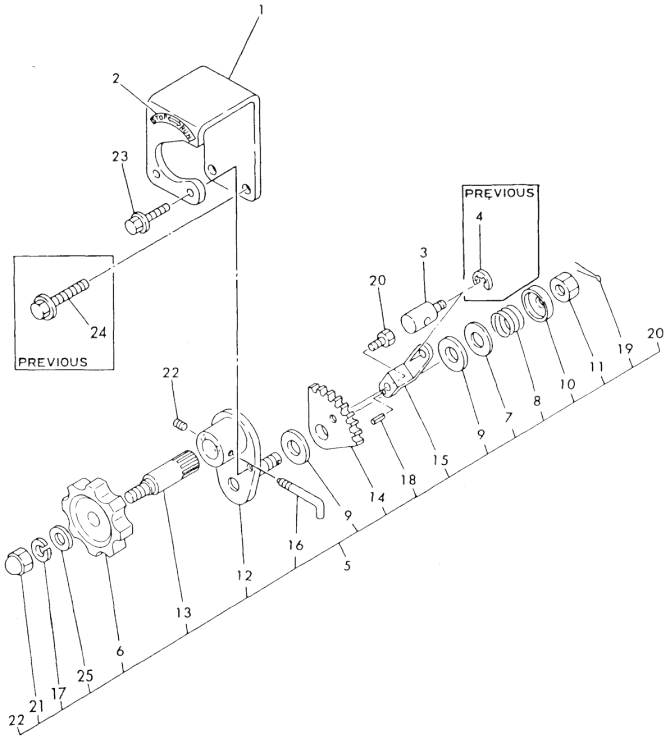

(A)=3TN66E-S (B)=3TNA72E-S (C)=3TN66E-G2 (D)=3TNA72E-G2 (E)= (F)=

No.	Lev.	Parts No.	Description	Q'ty (A)	(B)	(C)	(D)	(E)	(F)	I	R
1	1	119888-66110	BRACKET	1	1	1	1				
2	1	119888-66140	LABEL, INSTRUCTION	1	1	1	1				
2-1	1	170064-67210	LABEL, HANDLE	1	1	1	1				S
	(A=EXXX)	(B=EXXX)	(C=EXXX) (D=EXXX)								
3	1	119888-66130	PIVOT	1	1	1	1				
4	1	22272-000050	RING, E- 5	1	1	1	1				Z
	(A=EXXX)	(B=EXXX)	(C=EXXX) (D=EXXX)								
5	1	171048-67010	CONTROLLER ASSY	1	1	1	1				
6	2	126650-66020	HANDLE, REGULATOR	1	1	1	1				
7	2	171102-66080	WASHER	1	1	1	1				
8	2	104200-66820	SPRING	1	1	1	1				
9	2	104200-66830	PLATE, FRICTION	2	2	2	2				
10	2	104200-66850	WASHER	1	1	1	1				
11	2	104200-66860	NUT	1	1	1	1				
12	2	171085-67100	BRACKET	1	1	1	1				
13	2	171085-67110	SHAFT, DRIVE	1	1	1	1				
14	2	171085-67120	GEAR	1	1	1	1				
15	2	171048-67130	LEVER	1	1	1	1				
16	2	171085-67140	STOPPER	1	1	1	1				
16-1	2	171048-67140	STOPPER	1	1	1	1				S
	(A=E09724)	(B=E14948)	(C=E09238) (D=E08933)								
17	2	22217-100000	WASHER, SPRING 10	1	1	1	1				
18	2	22351-020006	PIN, SPRING 2.0X 6	1	1	1	1				
19	2	22411-200150	COTTER PIN 2.0X 15	1	1	1	1				
20	2	26116-060082	BOLT, M6X 8 PLATED	1	1	1	1				
21	2	26657-100002	NUT, CAP M10	1	1	1	1				
22	2	26979-050052	SCREW, M5X 5	1	1	1	1				
22-1	2	26921-050122	SCREW, M5X12	1	1	1	1				S
	(A=E07809)	(B=E14948)	(C=E06944) (D=E06154)								
23	1	26106-060102	BOLT, M6X 10 PLATED	2	2	2	2				
24	1	26106-080122	BOLT, M8X 12 PLATED	2	2	2	2				Z
	(A=EXXX)	(B=EXXX)	(C=EXXX) (D=EXXX)								
25	1	22117-100000	WASHER, 10	1	1	1	1				W
	(A=EXXX)	(B=EXXX)	(C=EXXX) (D=EXXX)								

N:Old ◄Yes/No► New. Q:Old ◄No/Yes► New. R:Old ◄Yes/Yes► New. S:Old ◄No/No► New. W:Add. Z:Discontinued. F:Interchangeable by set. K:Q'ty Change

Copyright (C) YANMAR CO., LTD. All RightsReserved.

Fig.46. ENGINE CONTROL LINK

Fig. 46 ENGINE CONTROL

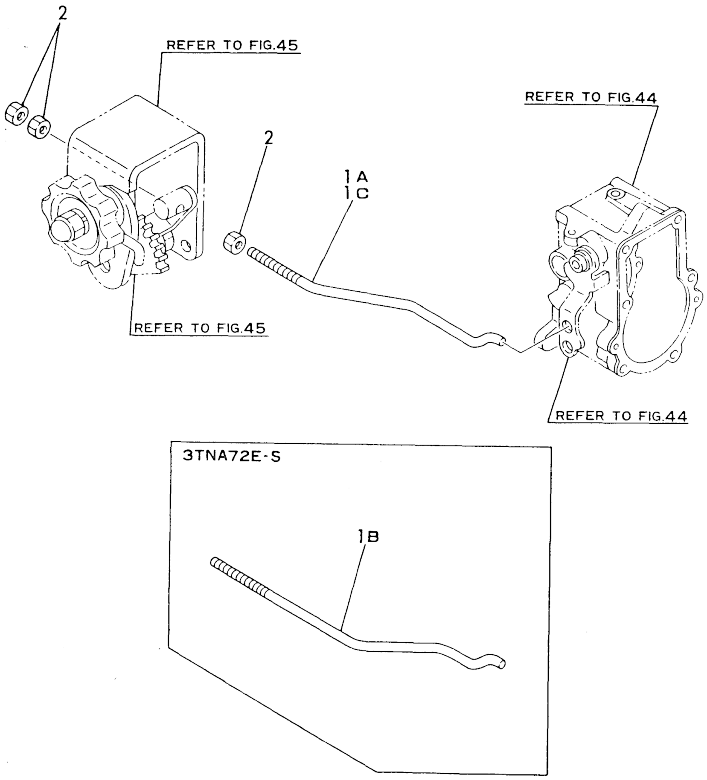

(A)=3TN66E-S
(B)=3TNA72E-S
(C)=3TN66E-G2
(D)=3TNA72E-G2
(E)=
(F)=

No.	Lev.	Parts No.	Description	Q'ty (A)	(B)	(C)	(D)	(E)	(F)	I	R
1A	1	119288-66120	LINK, ENGINE CONTROL	1							
1B	1	119688-66120	LINK, ENGINE CONTROL		1		1				
1C	1	119288-66150	LINK, ENGINE CONTROL			1					
1C-1	1	119288-66160	LINK, ENGINE CONTROL (C=E10615)			1				N	
2	1	26756-050002	NUT, LOCK M5	3	3	3	3				

N:Old ←Yes/No→ New. Q:Old ←No/Yes→ New. R:Old ←Yes/Yes→ New. S:Old ←No/No→ New. W:Add. Z:Discontinued. F:Interchangeable by set. K:Q'ty Change

Copyright (C) YANMAR CO., LTD. All RightsReserved.

Fig.47. STARTER

Fig. **47** STARTING MOTOR

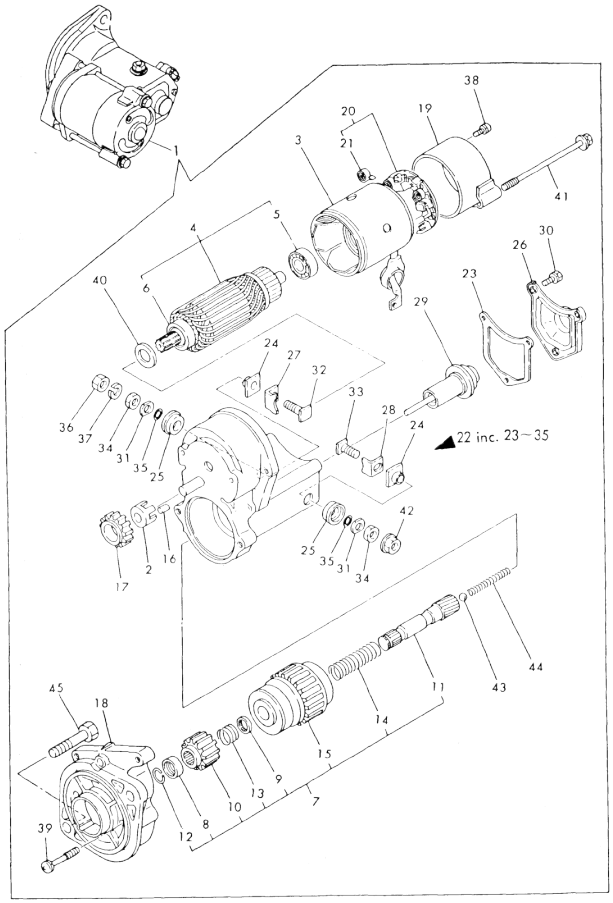

(A)=3TN66E-S (D)=3TNA72E-G2
(B)=3TNA72E-S (E)=
(C)=3TN66E-G2 (F)=

No.	Lev.	Parts No.	Description	Q'ty (A)	(B)	(C)	(D)	(E)	(F)	I	R
1	1	119620-77011	STARTER	1	1		1				
2	2	X0280630011	RETAINER	1	1		1				
3	2	X0281003751	YOKE ASSY	1	1		1				
4	2	X0282001531	ARMATURE ASSY	1	1		1				
5	3	X9491001360	BEARING	1	1		1				
6	3	X9491001860	BALL BEARING	1	1		1				
7	2	X0283005050	CLUTCH, STARTER	1	1		1				
8	3	X0280210230	NUT	1	1		1				
9	3	X0283270140	RETAINER	1	1		1				
10	3	X0283715030	PINION, STARTER	1	1		1				
11	3	X0283810040	SHAFT	1	1		1				
12	3	X9490721080	RING	1	1		1				
13	3	X9491703371	SPRING, COIL	1	1		1				
14	3	X9491704260	SPRING	1	1		1				
15	3	121120-77930	CASE ASSY, STARTER	1	1		1				
16	2	X0283060061	ROLLER	5	5		5				
17	2	X0283711420	PINION	1	1		1				
18	2	X0284004910	HOUSING, STARTER	1	1		1				
19	2	X0285040631	FRAME ASSY	1	1		1				
20	2	X0285100460	HOLDER ASSY, BRUSH	1	1		1				
21	3	X9491730461	SPRING	4	4		4				
22	2	X0534006460	SWITCH, MAGNETIC	1	1		1				
23	3	X0534040320	GASKET	1	1		1				
24	3	X0534490120	BUSH	2	2		2				
25	3	X0534490230	BUSH	2	2		2				
26	3	X0535050620	COVER	1	1		1				
27	3	X0535130320	PLATE (A)	1	1		1				
28	3	X0535130241	PLATE (B)	1	1		1				
29	3	X0536600401	PLUNGER	1	1		1				
30	3	X9151005141	BOLT W/WASHER	3	3		3				
31	3	X9490170900	WASHER	2	2		2				
32	3	X9490441303	BOLT	1	1		1				
33	3	X9490441312	BOLT	1	1		1				
34	3	X9490502820	NUT	2	2		2				
35	3	X9491402100	O-RING	2	2		2				
36	2	X9019008651	NUT	1	1		1				
37	2	X9025808001	WASHER	1	1		1				
38	2	X9490071810	SCREW W/WASHER	2	2		2				
39	2	X9490071970	SCREW W/WASHER	2	2		2				
40	2	X9490200710	WASHER	1	1		1				Z
	(A=E14053)	(B=E22675)	(D=E19333)								
41	2	X9490471500	BOLT W/WASHER	2	2		2				
41-1	2	X9490423330	BOLT W/WASHER	2	2		2				N
	(A=E14053)	(B=E22675)	(D=E19333)								
42	2	X9490561370	NUT	1	1		1				
43	2	X9491200240	BALL	1	1		1				
44	2	X9491703380	SPRING	1	1		1				
45	1	26116-120252	BOLT, M12X 25 PLATED	2	2		2				

N:Old ←Yes/No→ New. Q:Old ←No/Yes→ New. R:Old ←Yes/Yes→ New. S:Old ←No/No→ New. W:Add. Z:Discontinued. F:Interchangeable by set. K:Q'ty Change

Copyright (C) YANMAR CO., LTD. All RightsReserved.

Fig.48. STARTER

Fig.48 STARTING MOTOR

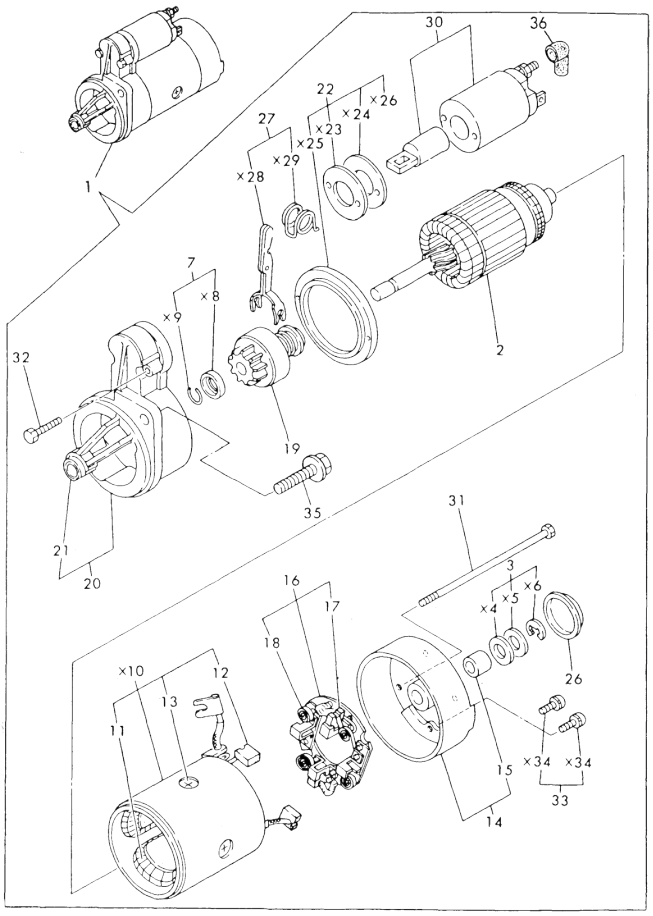

(A)=3TN66E-S
(B)=3TNA72E-S
(C)=3TN66E-G2
(D)=3TNA72E-G2
(E)=
(F)=

No.	Lev.	Parts No.	Description	Q'ty (A)	(B)	(C)	(D)	(E)	(F)	I	R
1	1	119225-77010	STARTER			1					
1-1	1	119225-77011	STARTER (C=E25052)			1				N	
2	2	X2114710080	ARMATURE ASSY			1					
3	2	X2114811000	WASHER KIT, THRUST			1					
7	2	X2114715500	STOPPER SET, PINION			1					
11	3	X2114921040	COIL ASSY, FIELD			1					
12	3	X2114531200	BRUSH (+)			2					
13	3	X2114821500	SCREW SET			4					
14	2	X2114430010	COVER ASSY, REAR			1					
15	3	X2114535200	METAL, STARTER			1					
16	2	X2114990010	HOLDER ASSY, BRUSH			1					
17	3	X2114831300	BRUSH (-)			1					
18	3	X2114931400	SPRING, BRUSH			3					
19	2	X2114455040	PINION ASSY			1					
20	2	X2114866060	HOUSING, GEAR			1					
21	3	X2114535200	METAL, STARTER			1					
22	2	X2114780060	COVER ASSY, DUST			1					
27	2	X2114660130	LEVER KIT, SHIFT			1					
30	2	X2114275070	SWITCH, MAGNETIC			1					
31	2	X2114680050	BOLT, THROUGH			2					
32	2	X2114586700	BOLT M6X 37			2					
33	2	X2114283500	SCREW SET			1					
35	1	26106-100252	BOLT, M10X 25 PLATED			2					
36	1	124550-77030	COVER, TERMINAL (C=EXXX)			1				W	

N:Old ←Yes/No→ New. Q:Old ←No/Yes→ New, R:Old ←Yes/Yes→ New, S:Old ←No/No→ New, W:Add, Z:Discontinued, F:Interchangeable by set, K:Q'ty Change

Copyright (C) YANMAR CO., LTD. All RightsReserved.

Fig.49. GENERATOR

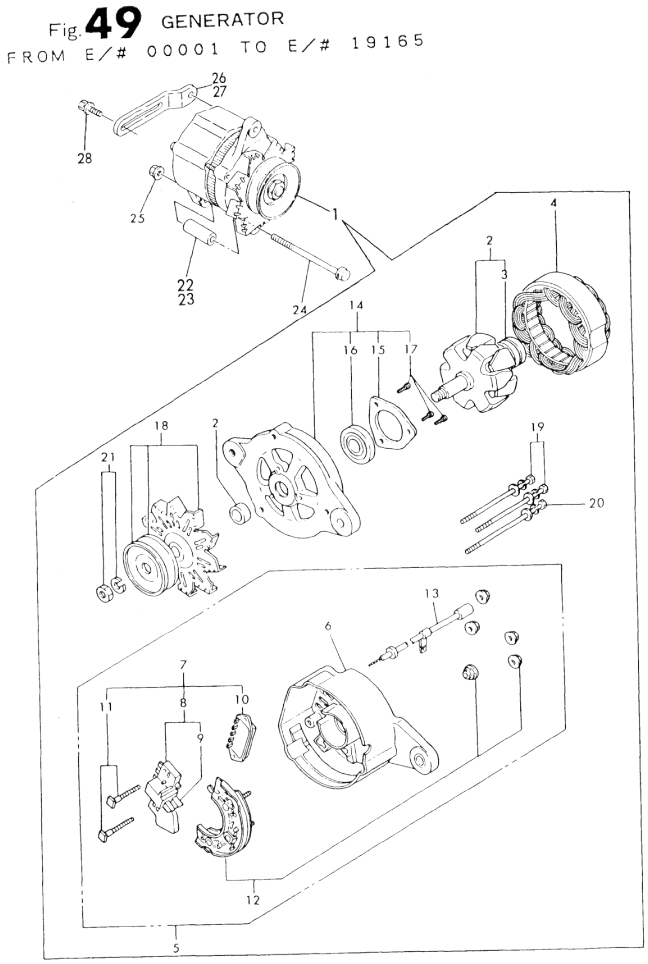

(A)=3TN66E-S
(B)=3TNA72E-S
(C)=3TN66E-G2
(D)=3TNA72E-G2
(E)=
(F)=

No.	Lev.	Parts No.	Description	Q'ty (A)	(B)	(C)	(D)	(E)	(F)	I	R
1	1	121400-77201	GENERATOR, LR120-15C	1	1	1	1				
2	2	XL12031001	ROTOR ASSY	1	1	1	1				
3	3	X6201SD	BALL BEARING	1	1	1	1				
4	2	XL1209200	STATOR ASSY	1	1	1	1				
5	2	XL13533004	COVER ASSY, REAR	1	1	1	1				
6	3	XL12033011	COVER, REAR	1	1	1	1				
7	3	XL13513152	REGULATOR ASSY	1	1	1	1				
8	4	XL1354326	BRUSH ASSY	1	1	1	1				
9	4	XL12013262	BRUSH	2	2	2	2				
10	4	XTR1Z63	REGULATOR, LC	1	1	1	1				
11	4	XL13513134	BOLT M5	2	2	2	2				
12	3	XL1358320	ARMATURE	1	1	1	1				
13	3	XL1356360	WIRE ASSY	1	1	1	1				
14	2	XL1202401	COVER ASSY, FRONT	1	1	1	1				
15	3	XL13514041	RETAINER	1	1	1	1				
16	3	X6202BM	BALL BEARING	1	1	1	1				
17	3	XL12010001	SCREW KIT	1	1	1	1				
18	2	XL1201510	PULLEY ASSY	1	1	1	1				
19	2	XL1254801	BOLT, THROUGH	2	2	2	2				
20	2	XL1255801	BOLT, THROUGH	1	1	1	1				
21	2	XB495469B	NUT ASSY, PULLEY	1	1	1	1				
22	1	119288-77340	PIECE, DISTANCE	1		1					
23	1	119688-77340	SPACER		1		1				
24	1	26106-081202	BOLT, M8X120 PLATED	1	1	1	1				
25	1	26366-080002	NUT, M8	1	1	1	1				
26	1	119660-77330	ADJUSTER		1		1				
27	1	119225-77330	ADJUSTER			1					
28	1	26014-080252	BOLT, M8X 25		1	1	1				

N:Old ◄Yes/No► New. Q:Old ◄No/Yes► New. R:Old ◄Yes/Yes► New. S:Old ◄No/No► New. W:Add. Z:Discontinued. F:Interchangeable by set. K:Q'ty Change

Copyright (C) YANMAR CO., LTD. All RightsReserved.

Fig.50. GENERATOR(3TN66E-S:E/#19166--)

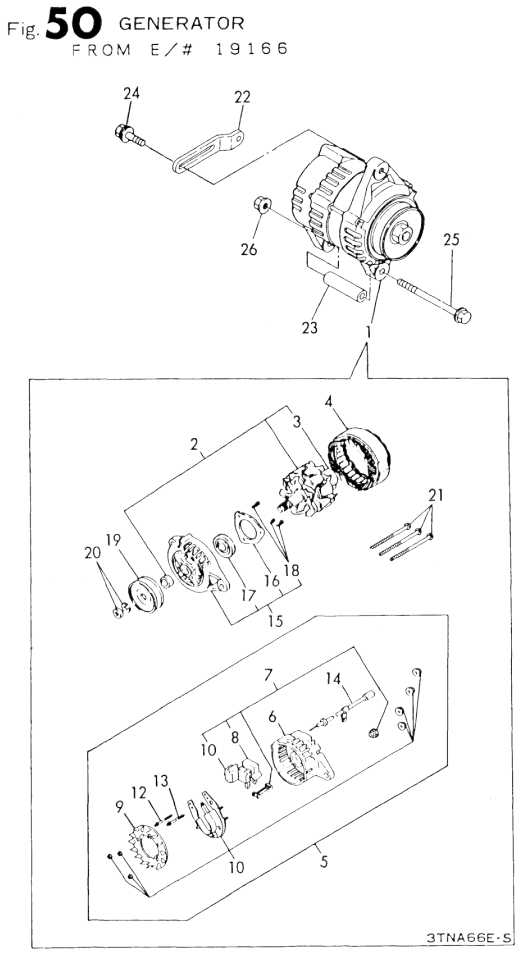

(A)=3TN66E-S
(B)=3TNA72E-S
(C)=3TN66E-G2
(D)=3TNA72E-G2
(E)=
(F)=

No.	Lev.	Parts No.	Description	Q'ty (A)	(B)	(C)	(D)	(E)	(F)	I	R
1	1	119836-77200	GENERATOR	1							
2	2	119836-77700	ROTOR ASSY	1							
3	3	119836-77850	BALL BEARING	1							
4	2	119836-77710	STARTER ASSY	1							
5	2	119836-77721	COVER ASSY, REAR	1							
6	3	119836-77730	COVER, REAR	1							
7	3	119836-77741	BRUSH ASSY,REGULATOR	1							
8	4	119836-77750	BRUSH ASSY	1							
9	3	119836-77760	GUIDE, FAN SIDE	1							
10	3	119836-77770	DIODE ASSY	1							
11	3	119836-77780	CONDENSER	1							
12	3	119836-77871	BOLT (1)	1							
13	3	119836-77880	BOLT (2)	1							
14	3	119836-77890	WIRE ASSY, LEAD	1							
15	2	119836-77790	COVER ASSY, FRONT	1							
16	3	119836-77800	RETAINER, BEARING	1							
17	3	119836-77840	BALL BEARING	1							
18	2	119836-77860	SCREW KID	1							
19	2	119836-77810	PULLEY	1							
20	2	119836-77820	NUT ASSY, PULLEY	1							
21	2	119836-77830	BOLT, THROUGH	1							
22	1	119225-77330	ADJUSTER	1							
23	1	129150-77340	SPACER	1							
24	1	26106-080182	BOLT, M8X 18 PLATED	1							
25	1	26106-081052	BOLT, M8X105 PLATED	1							
26	1	26366-080002	NUT, M8	1							

N:Old ◄Yes/No► New. Q:Old ◄No/Yes► New. R:Old ◄Yes/Yes► New. S:Old ◄No/No► New. W:Add. Z:Discontinued. F:Interchangeable by set. K:Q'ty Change

Copyright (C) YANMAR CO., LTD. All RightsReserved.

Fig.51. INSTRUMENT PANEL

Fig. **51** PANEL

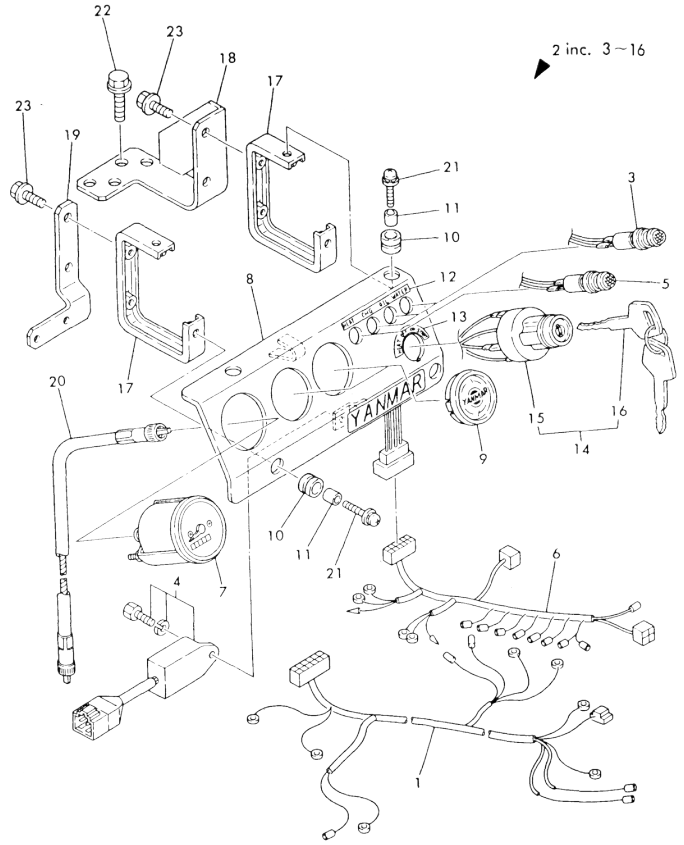

(A)=3TN66E-S (D)=3TNA72E-G2
(B)=3TNA72E-S (E)=
(C)=3TN66E-G2 (F)=

No.	Lev.	Parts No.	Description	Q'ty (A)	(B)	(C)	(D)	(E)	(F)	I	R
1	1	119888-91020	HARNESS, WIRE	1	1	1	1				
2	1	119888-91100	PANEL ASSY	1	1	1	1				
3	2	124732-77720	LAMP, CHARGING	3	3	3	3				
4	2	128300-77920	TIMER	1	1	1	1				
5	2	124559-77971	LAMP, PILOT	1	1	1	1				
6	2	119888-91030	HARNESS, WIRE	1	1	1	1				
7	2	171080-91100	TACHOMETER	1	1	1	1				
8	2	119888-91110	BODY, PANEL	1	1	1	1				
9	2	124770-91220	COVER	2	2	2	2				
10	2	121400-91520	ABSORBER	4	4	4	4				
11	2	121400-91530	SPACER	4	4	4	4				
12	2	119888-91610	LABEL, CW & OIL LAMP	1	1	1	1				
13	2	119888-91620	LABEL, KEY SWITCH	1	1	1	1				
14	2	933110-00100	SWITCH ASSY, STARTER	1	1	1	1				
15	3	933110-00200	SWITCH ASSY, STARTER	1	1	1	1				
16	3	933110-00301	KEY ASSY	1	1	1	1				
17	1	119888-91120	SUPPORT	2	2	2	2				
18	1	119288-91130	BRACKET, PANEL	1	1	1	1				
19	1	119288-91140	SUPPORT	1	1	1	1				
20	1	124701-91140	CABLE, L=985	1	1	1	1				
21	1	26033-060202	SCREW M 6X 20	4	4	4	4				
22	1	26106-100122	BOLT, M10X 12 PLATED	2	2	2	2				
22-1	1	26106-100502	BOLT, M10X 50 PLATED	2	2	2	2				S
	(A=E02137)	(B=E01154)	(C=E03973) (D=E01486)								
23	1	26106-080122	BOLT, M8X 12 PLATED	4	4	4	4				

N:Old ←Yes/No→ New. Q:Old ←No/Yes→ New. R:Old ←Yes/Yes→ New. S:Old ←No/No→ New. W:Add. Z:Discontinued. F:Interchangeable by set. K:Q'ty Change

Copyright (C) YANMAR CO., LTD. All RightsReserved.

Fig.52. GASKET SET

Fig. **52** GASKET SET

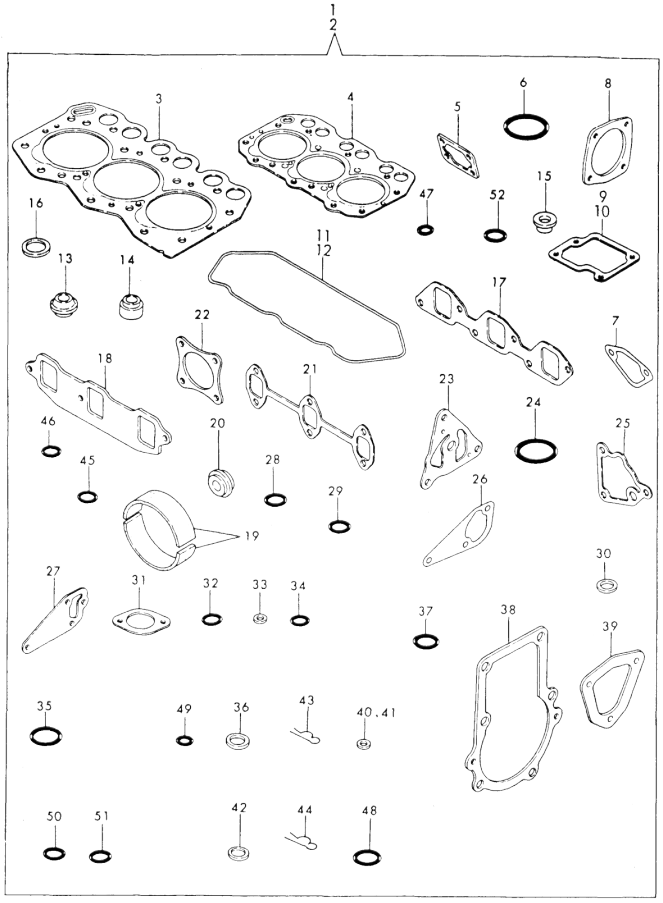

(A)=3TN66E-S (D)=3TNA72E-G2
(B)=3TNA72E-S (E)=
(C)=3TN66E-G2 (F)=

No.	Lev.	Parts No.	Description	Q'ty (A)	(B)	(C)	(D)	(E)	(F)	I	R
1	1	719288-92600	GASKET SET	1		1					
1-1	1	719288-92601	GASKET SET	1		1					N
	(A=E02137)		(C=E03973)								
1-2	1	719288-92602	GASKET SET	1		1					N
	(A=E23030)		(C=E23602)								
2	1	719688-92600	GASKET SET		1		1				
2-1	1	719688-92601	GASKET SET		1		1				N
			(B=E14948) (D=E13024)								
2-2	1	719688-92602	GASKET SET		1		1				N
			(B=E43621) (D=E43621)								
3	2	119225-01340	GASKET, HEAD	1		1					
4	2	119620-01340	GASKET, HEAD		1		1				
4-1	2	119610-01340	GASKET, HEAD		1		1				N
			(B=E01606) (D=E01486)								
5	2	119660-01561	GASKET	1	1	1	1				
5-1	2	119660-01562	GASKET	1	1	1	1				N
	(A=EXXX)		(B=EXXX) (C=EXXX) (D=EXXX)								
6	2	121420-01760	O-RING	1	1	1	1				
6-1	2	24311-000320	O-RING, 1AP32.0	1	1	1	1				N
	(A=E17057)		(B=E22675) (C=E16975) (D=E21965)								
7	2	121520-01850	GASKET	1	1	1	1				
7-1	2	121520-01851	GASKET	1	1	1	1				N
	(A=E23030)		(B=E43621) (C=E23602) (D=E43621)								
8	2	124240-01882	GASKET		2		2				Z
			(B=E22675) (D=E21965)								
9	2	119260-03030	GASKET	1		1					
9-1	2	119260-03031	GASKET	1		1					N
	(A=E25453)		(C=E25052)								
10	2	119620-03030	GASKET		1		1				
10-1	2	119620-03031	GASKET		1		1				N
			(B=EXXX) (D=EXXX)								
11	2	119260-11310	GASKET, BONNET	1		1					
12	2	119620-11310	GASKET, BONNET		1		1				
13	2	119260-11340	SEAL, VALVE STEM	6		6					
14	2	124950-11340	SEAL, VALVE STEM		6		6				
14-1	2	124950-11340	SEAL, VALVE STEM		3		3				K
			(B=E14948) (D=E13024)								
14A	2	124160-11340	SEAL, VALVE STEM		3		3				W
			(B=E14948) (D=E13024)								
15	2	119600-11450	PROTECTOR, NOZZLE	3	3	3	3				
16	2	119600-11460	GASKET, NOZZLE	6	6	6	6				
17	2	119260-12110	GASKET, MANIFOLD	1		1					
17-1	2	119260-12111	GASKET, MANIFOLD	1		1					N
	(A=E25453)		(C=E25052)								
18	2	119660-12111	GASKET, MANIFOLD		1		1				
19	2	119640-12580	SEAT, RUBBER	2	2	2	2				
20	2	119860-12560	WASHER, SEAL	1	1	1	1				
21	2	119260-13110	GASKET	1		1					
21A	2	119620-13110	GASKET		1		1				W
			(B=E01040) (D=E01486)								
22	2	121000-13200	GASKET, SILENCER	2	2	2	2				

N:Old ←Yes/No→ New. Q:Old ←No/Yes→ New. R:Old ←Yes/Yes→ New. S:Old ←No/No→ New. W:Add. Z:Discontinued. F:Interchangeable by set. K:Q'ty Change

++ CONTINUE ++

Copyright (C) YANMAR CO., LTD. All RightsReserved.

Fig.52. GASKET SET

Fig. **52** GASKET SET

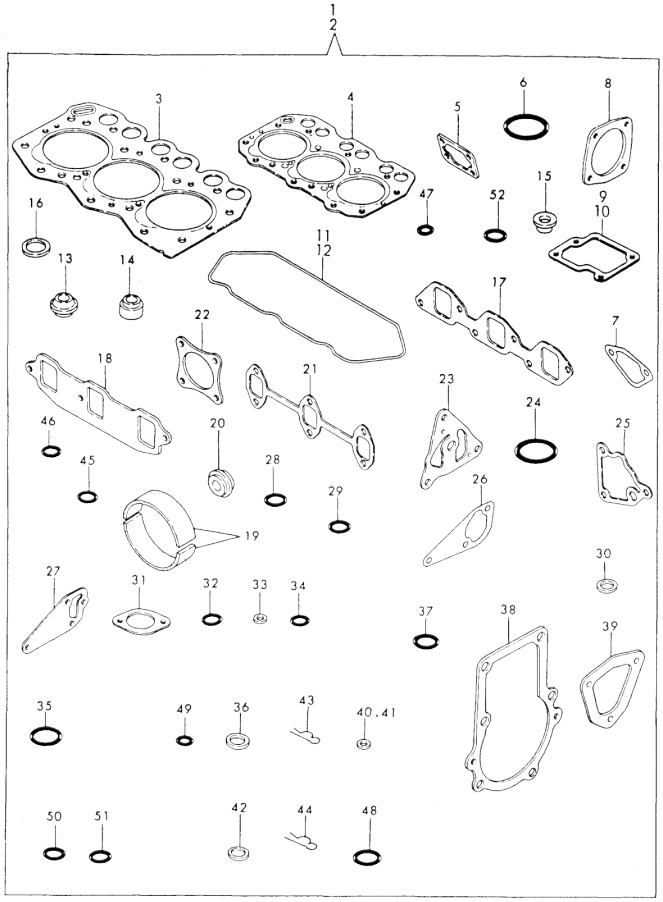

(A)=3TN66E-S (D)=3TNA72E-G2
(B)=3TNA72E-S (E)=
(C)=3TN66E-G2 (F)=

No.	Lev.	Parts No.	Description	Q'ty (A)	(B)	(C)	(D)	(E)	(F)	I	R
23	2	119660-32020	GASKET, PUMP	1	1	1	1				
24	2	124450-35110	O-RING	1	1	1	1				
25	2	119660-35112	GASKET		1		1				
25-1	2	119660-35113	GASKET		1		1				N
		(B=E43621)	(D=E37750)								
26	2	119260-42020	GASKET, WATER PUMP	1		1					
27	2	119620-42020	GASKET, WATER PUMP		1		1				
28	2	119225-42320	O-RING	1		1					
29	2	119620-42320	O-RING		1		1				
30	2	124465-44950	GASKET, 16	1	3	1	3				
31	2	129350-49540	GASKET		1		1				
31-1	2	129350-49541	GASKET		1		1				N
		(B=E43621)	(D=E37750)								
32	2	129155-51280	O-RING, S6	1	1	1	1				
33	2	119620-51350	GASKET	3	3	3	3				
34	2	119620-51370	O-RING	3	3	3	3				
35	2	102103-55520	O-RING	2	1	2	1				
36	2	104200-59170	GASKET, 12	2	2	2	2				
37	2	129155-61830	O-RING, S10	3	3	3	3				
38	2	119660-61051	GASKET	1	1	1	1				
38-1	2	119660-61052	GASKET	1	1	1	1				N
	(A=E23030)	(B=E43621)	(C=E23602) (D=E37750)								
39	2	119660-61070	GASKET	1	1	1	1				
39-1	2	119660-61071	GASKET	1	1	1	1				N
	(A=E23030)	(B=E43621)	(C=E23602) (D=E37750)								
40	2	43400-500390	SEAL WASHER 6	1	1	1	1				
41	2	43400-500400	SEAL WASHER 6	2	2	2	2				
42	2	43400-500450	SEAL WASHER 12	2	2	2	2				
43	2	22360-040000	PIN, SNAP 4	1	1	1	1				
44	2	22360-060000	PIN, SNAP 6	1	1	1	1				
45	2	24311-000120	O-RING, 1AP12.0	5	5	5	5				
46	2	24311-000160	O-RING, 1AP16.0		1		1				
47	2	24311-000180	O-RING, 1AP18.0	1		1					
48	2	24311-000260	O-RING, 1AP26.0	1	1	1	1				
48-1	2	24341-000240	O-RING, 1AS24.0	1	1	1	1				N
	(A=E02137)	(B=E01154)	(C=E03973) (D=E01486)								
49	2	24311-240100	O-RING, 1AP10A	3	2	3	2				
50	2	24321-000350	O-RING, 1AG35.0	1		1					
51	2	24341-000070	O-RING, 1AS7.0	1	1	1	1				
52	2	24341-000250	O-RING, 1AS25.0		1		1				
52-1	2	24341-000240	O-RING, 1AS24.0		1		1				N
		(B=E17007)	(D=E17064)								
53	2	23414-160021	GASKET, 16X1.0	1		1					W
	(A=E17057)		(C=E16975)								
54	2	23418-060000	GASKET, 6X1.0	2	2	2	2				W
	(A=E17057)	(B=E22675)									
55	2	23414-080012	GASKET, 8X1.0	4	4	4	4				W
	(A=E17057)	(B=E22675)									
56	2	23414-140000	GASKET, 14X1.0	3	3	3	3				W
	(A=E17057)	(B=E22675)									

N:Old $\xleftarrow[\text{No}]{\text{Yes}}$ New. Q:Old $\xleftarrow[\text{Yes}]{\text{No}}$ New. R:Old $\xleftarrow[\text{Yes}]{\text{Yes}}$ New. S:Old $\xleftarrow[\text{No}]{\text{No}}$ New. W:Add. Z:Discontinued. F:Interchangeable by set. K:Q'ty Change

Copyright (C) YANMAR CO., LTD. All RightsReserved.

Parts No. Index

Parts No.	Fig. No.	Ref. No.
101158-11190	11	12
101304-59020	41	7
	42	1
101720-55750	39	11
102103-55520	39	6
	52	35
102210-07990	8	3
		6
	14	14
	15	14
103854-59191	41	12
	42	8
103854-59201	41	13
	42	9
104200-55321	39	2
104200-55330	39	3
104200-55341	39	4
104200-55750	39	12
104200-59170	41	11
	42	7
	52	36
104200-66820	45	8
104200-66830	45	9
104200-66850	45	10
104200-66860	45	11
104211-11370	11	14
104264-59030	41	2
		5
	42	2
104514-42780	31	16 B
104884-59170	2	30
105010-11230	12	7
		11
	13	7
		11
105025-59550	43	10
105225-22400	24	8
105225-23200	24	48
105582-59150	41	10
	42	6
110250-55610	39	7
114250-11120	10	10
114250-11180	10	11
114250-11190	10	12
114250-53130	38	8
114250-53400	38	10
119225-01340	1	26
	52	3
119225-34810	27	3
119225-35300	28	3

Parts No.	Fig. No.	Ref. No.
119225-42320	31	10
	52	28
119225-51100	37	4
119225-51300	37	14
119225-59810	40	5 -1
119225-77010	48	1
119225-77011	48	1 -1
119225-77330	49	27
	50	22
119256-42290	31	16 A
119260-01200	1	25
119260-01490	3	1 -1
119260-01590	3	11
119260-01600	5	1 B
119260-01770	6	1 -1
119260-02020	1	11
119260-02410	1	20
119260-03020	14	6
119260-03030	14	7
	52	9
119260-03031	14	7 -1
	52	9 -1
119260-07900	9	1
119260-11100	10	8
119260-11110	10	9
119260-11200	12	1
119260-11240	12	2
119260-11260	12	13
119260-11270	12	14
119260-11280	12	15
119260-11310	14	10
	52	11
119260-11330	14	1 -2
119260-11340	10	13
	52	13
119260-11370	10	14
119260-11800	10	23
119260-12110	17	3
	52	17
119260-12111	17	3 -1
	52	17 -1
119260-13100	19	1
119260-13110	19	2
	52	21
119260-14100	21	4
119260-14200	21	6
119260-14400	21	7
119260-21200	23	5
119260-21590	23	11 B
119260-21650	23	17

Parts No.	Fig. No.	Ref. No.
119260-22300	24	7
119260-23200	24	47
119260-23910	24	53
119260-25100	25	3
119260-25900	21	13
119260-32000	26	1
119260-34810	27	4
119260-35081	30	1
119260-42000	31	1
119260-42001	31	1 -1
119260-42020	31	12
	52	26
119260-42051	31	4 -1
119260-44500	33	1 A
	34	1
119260-49530	35	4
119260-49800	35	7
119260-59020	41	1
119260-59030	41	6
119260-59520	43	3
		8 -1
119260-59530	43	4
		9 -1
119260-59540	43	1
119260-59550	43	5
119260-59810	40	5
119260-59820	40	7
119260-59830	40	9
119260-66540	44	66 A
119270-22090	24	1
119270-22091	24	1 -1
119270-22111	24	5 -1
119270-22920	24	15
119270-22970	24	17
119280-01600	5	1 A
119280-49020	33	25
	34	7
119288-08100	9	4
119288-12050	16	1
119288-12100	17	1
119288-12590	16	9
119288-13500	18	2
119288-13650	18	3
119288-44760	33	5 A
119288-44940	33	8 A
119288-44950	33	11
119288-44960	33	12 A
119288-44970	33	9 A
119288-44980	33	10 A
119288-49010	33	24 A

Parts No.	Fig. No.	Ref. No.
119288-49010	33	24 B
	34	5
119288-55900	39	15
119288-66120	46	1 A
119288-66150	46	1 C
119288-66160	46	1 C-1
119288-77340	49	22
119288-91130	51	18
119288-91140	51	19
119454-01721	6	5
119462-12550	16	8 -1
119600-01050	2	4 -1
119600-01501	4	1
119600-01600	5	1 C
119600-01720	7	5
119600-01721	7	5 -1
119600-01722	7	5 -2
119600-01770	7	1 B-2
119600-11450	10	20
	11	22
	52	15
119600-11460	10	21
	11	23
	52	16
119600-21580	23	11 C
119600-34800	27	1 A
119600-34820	27	1 B
119600-35080	30	2
119600-35081	30	2 -1
119600-35091	30	2 -2
119600-44500	33	1 B
119600-52021	3	24
	4	28
119600-61200	44	4
119600-61500	44	20
119600-61540	44	25
		36 -1
119600-61650	44	26
119600-61900	44	41
119600-66020	44	59
119600-66521	44	62
119600-66530	44	66 B
119600-66681	44	63
119600-66720	44	47
119600-66840	44	77
119610-01340	2	25 -1
	52	4 -1
119610-01490	4	1 -1
119610-01590	4	11
119620-01200	2	24

Parts No. Index

Parts No.	Fig. No.	Ref. No.
119620-01340	2	25
	52	4
119620-01620	5	8 -1
119620-01750	5	3
119620-01800	3	12
	4	12
119620-01950	3	14
	4	14
119620-02020	2	9
119620-02410	2	18
119620-02450	21	5
	22	4 A
119620-03020	15	6
119620-03030	15	7
	52	10
119620-03031	15	7 -1
	52	10 -1
119620-11080	11	20
119620-11090	11	21
119620-11100	11	8
119620-11110	11	9
119620-11120	11	10
119620-11180	11	11
119620-11200	13	1
119620-11240	13	2
119620-11260	13	13
119620-11280	13	15
119620-11310	15	10
	52	12
119620-11330	15	1 -2
119620-11350	10	16
	11	16
	12	17
	13	17
119620-11801	11	25
119620-13110	20	9
	52	21 A
119620-13550	19	3
119620-14100	22	4
119620-14200	22	5
119620-14400	22	6
119620-21941	23	20
119620-22090	24	21
119620-22110	24	25 -1
119620-22300	24	27
119620-22920	24	35
119620-22970	24	37
119620-23910	24	53 -1
119620-25102	25	6
119620-25912	25	11

Parts No.	Fig. No.	Ref. No.
119620-34822	27	5
119620-42020	32	15
	52	27
119620-42320	32	10
	52	29
119620-42350	31	17
119620-51101	37	7
119620-51170	37	10
119620-51180	37	11
119620-51190	37	12
119620-51250	37	13
119620-51300	37	17
119620-51350	37	22
	52	33
119620-51370	37	23
	52	34
119620-51700	37	33
119620-53000	38	2
119620-53080	38	5
119620-53120	38	7
119620-53140	38	9
119620-59540	43	6
119620-59700	43	11
119620-59810	40	6
119620-59811	40	6 -1
119620-59820	40	8
119620-59821	40	8 -1
119620-59830	40	10
119620-59831	40	10 -1
119620-77011	47	1
119620-77820	14	17
	15	17
119621-21680	23	19
119621-26140	4	24
119621-66051	44	60
119621-66091	44	43
119629-14580	22	1
119631-13100	20	1
119631-13101	20	1 -1
119640-12580	16	11
		14
	52	19
119640-12590	16	12
119645-49020	34	8
119654-12550	16	8
119656-01900	2	29
119656-42290	32	16
119656-42350	32	17
119656-61500	44	20 -1
		31 -1

Parts No.	Fig. No.	Ref. No.
119660-01551	3	8
	4	8
119660-01561	3	9
	4	9
	52	5
119660-01562	3	9 -1
	4	9 -1
	52	5 -1
119660-01570	3	6
119660-01640	5	6
119660-01821	21	17
	22	12
119660-01911	3	13
	4	13
119660-12101	17	2
119660-12111	17	4
	52	18
119660-21201	23	6
119660-21651	23	18
119660-25022	1	21
	2	20
	25	1
119660-25052	1	22
	2	21
	25	2
119660-25902	22	11
119660-32001	26	11
119660-32020	26	21
	52	23
119660-35102	29	1
119660-35112	29	2
	52	25
119660-35113	29	2 -1
	52	25 -1
119660-35150	28	1
	29	3
119660-35300	29	5
119660-42003	32	1
119660-42004	32	1 -1
119660-42350	32	17 -1
119660-61013	44	15
119660-61051	44	1
	52	38
119660-61052	44	1 -1
	52	38 -1
119660-61060	44	2
119660-61070	44	3
	52	39
119660-61071	44	3 -1
	52	39 -1

Parts No.	Fig. No.	Ref. No.
119660-61121	44	16
119660-61140	44	16 A
119660-61150	44	16 B
119660-61300	44	8
119660-61341	44	9
119660-61460	44	17
119660-61491	44	19
119660-61501	44	31
119660-61651	44	26 -1
		37
119660-61901	44	42
119660-66830	44	76
119660-77330	49	26
119688-12500	16	3
119688-12540	16	5
119688-13650	18	4
119688-13651	18	4 -1
119688-21590	23	11 A
119688-44940	33	8 B
119688-44950	33	11 -1
119688-44960	33	12 B
119688-44970	33	9 B
119688-44980	33	10 B
119688-49010	34	6
119688-66120	46	1 B
119688-77340	49	23
119836-77200	50	1
119836-77700	50	2
119836-77710	50	4
119836-77721	50	5
119836-77730	50	6
119836-77741	50	7
119836-77750	50	8
119836-77760	50	9
119836-77770	50	10
119836-77780	50	11
119836-77790	50	15
119836-77800	50	16
119836-77810	50	19
119836-77820	50	20
119836-77830	50	21
119836-77840	50	17
119836-77850	50	3
119836-77860	50	18
119836-77871	50	12
119836-77880	50	13
119836-77890	50	14
119840-13150	20	2
119860-12510	16	4
119860-12550	16	6

Parts No. Index

Parts No.	Fig. No.	Ref. No.
119860-12560	16	7
	52	20
119865-21600	23	13 A
119888-08110	9	5
119888-13600	18	10
119888-13670	18	5
119888-13680	18	6
119888-21450	23	14
119888-44560	33	5 B-1
119888-66110	45	1
119888-66130	45	3
119888-66140	8	10
	45	2
119888-91020	51	1
119888-91030	51	6
119888-91100	51	2
119888-91110	51	8
119888-91120	51	17
119888-91610	8	11
	51	12
119888-91620	8	12
	51	13
121000-13200	18	1
	19	7
	20	3
	52	22
121023-44740	33	22 A
	34	10
121023-49150	36	4
121111-21501	23	10
121120-01620	5	2
121120-77930	47	15
121150-44580	33	3 B
121236-59080	42	4
121250-44901	35	2
		12
121250-55620	39	8
121254-55510	39	5
121267-44760	33	27
121400-01640	6	3
121400-44650	33	4
121400-77201	49	1
121400-91520	51	10
121400-91530	51	11
121420-01760	3	22
	4	21
	14	5
	52	6
121450-01560	3	4
	4	4

Parts No.	Fig. No.	Ref. No.
121450-42450	31	14 -1
	32	11
	35	1
121450-61520	44	24 -1
		35 -1
121462-44580	33	3 A
121520-01850	3	23
	4	27
	52	7
121520-01851	3	23 -1
	4	27 -1
	52	7 -1
121520-34810	27	2
121521-12400	16	2
121550-49111	1	10
	2	19
121575-66830	44	76 -1
121750-49150	36	5
121750-59890	36	8 -1
		9
	41	17
	42	13
121850-11860	10	5
	11	5
123682-44210	33	2
	34	2 A
124060-01050	1	4
124060-59380	41	14
	42	10
124066-59100	43	2
		7
124085-02220	5	7
124160-01750	14	4
124160-01751	3	21
	4	20
	14	4 -1
	15	18
124160-01910	2	4
124160-11340	11	13 A
	52	14 A
124160-11360	14	11
	15	11 -1
124160-39450	30	6
124160-59080	42	5
124240-01871	4	22
124240-01882	4	23
	52	8
124250-03640	44	61
124450-35110	28	2
	29	4

Parts No.	Fig. No.	Ref. No.
124450-35110	52	24
124465-44950	32	12
	35	3
		3 -1
	52	30
124550-55700	39	9
124550-66370	44	75
124550-77030	48	36
124559-77971	51	5
124700-44740	33	22 B
	34	11
124701-91140	51	20
124732-77720	51	3
124764-12600	8	7
	16	15
124764-44800	8	8
	33	6
	34	3
124764-44920	8	9
	33	7
	34	4
124766-59050	36	6
	41	3
		8
	42	3
124770-91220	51	9
124772-66750	44	72
124950-11340	11	13
		13 -1
	52	14
		14 -1
124950-21600	23	13 B
126650-66020	45	6
128300-77920	51	4
129100-01580	5	4 -1
	23	9
129100-61930	44	65
129136-12600	8	7 -1
	16	15 -1
129150-11360	15	11
129150-35350	28	9
	29	13
129150-49080	36	2
129150-49090	36	3
129150-49100	36	1
129150-59120	40	1
129150-59130	40	4
129150-77340	50	23
129150-91400	3	26
	4	30

Parts No.	Fig. No.	Ref. No.
129155-51280	44	14
	52	32
129155-59520	43	8
129155-59530	43	9
129155-61480	44	18
129155-61530	44	24
		35
129155-61540	44	36
129155-61590	44	50
129155-61830	38	11
	52	37
129156-61600	44	51
129301-01650	36	8
129350-49530	35	5
129350-49540	35	6
	52	31
129350-49541	35	6 -1
	52	31 -1
129350-49800	35	8
129555-61800	44	52
129795-77800	14	16
	15	16
135210-61090	44	74
170064-67210	45	2 -1
171002-44502	34	2
171048-67010	45	5
171048-67130	45	15
171048-67140	45	16 -1
171059-55600	39	1
171080-91100	51	7
171085-67100	45	12
171085-67110	45	13
171085-67120	45	14
171085-67140	45	16
171102-66080	45	7
171301-01640	7	3
171301-44560	33	5 B
174307-51700	44	21
		32
194990-22050	3	10
	4	10
	10	19
	11	19
	18	7
	19	6
	20	4
	44	58
22117-040000	44	27
		38
22117-050000	44	53

Parts No. Index

Parts No.	Fig. No.	Ref. No.
22117-100000	45	25
22137-040000	37	39
22137-080000	33	14
22217-040000	37	40
22217-050000	14	8
	15	8
22217-100000	33	15
	45	17
22242-000100	12	16
22242-000120	13	16
22242-000200	1	23
	2	22
	25	9
22252-000210	24	28
22272-000040	44	28
		39
		54
22272-000050	45	4
22312-060100	5	8
22312-080160	5	4
22322-030160	44	46
22351-020004	44	29
		40 A
22351-020006	45	18
22351-030014	44	30
		40
22351-040010	3	5
	4	5
	44	10
22351-060012	10	22
	11	24
22360-040000	44	55
	52	43
22360-060000	44	11
	52	44
22411-200150	45	19
22451-060000	44	78
22512-040120	21	3
		11
	22	3
		9
	23	7
23000-060000	16	16
23010-038000	33	26
	34	9
23065-120500	14	15
	15	15
23414-080012	41	16
	42	12
	52	55

Parts No.	Fig. No.	Ref. No.
23414-140000	43	12
	52	56
23414-160021	31	13
	52	53
23418-060000	39	13
	52	54
23871-010000	2	5
23871-020000	10	5 -1
23871-030000	32	13
23887-160002	31	14
24101-062034	21	14
	22	15
24102-063034	21	12
	22	10
24104-062054	23	15
24311-000120	3	15
	4	15
	14	12
	15	12
	30	3
	52	45
24311-000160	29	11
	52	46
24311-000180	6	4
	52	47
24311-000260	3	27
	4	31
	52	48
24311-000320	3	22 -1
	4	21 -1
	14	5 -1
	15	19
	52	6 -1
24311-240100	27	6
	39	14
	44	64
	52	49
24321-000350	35	9
	52	50
24341-000070	44	56
	52	51
24341-000240	3	27 -1
	4	31 -1
	7	4 -1
	52	48 -1
		52 -1
24341-000250	7	4
	52	52
26013-060202	26	22
26014-060162	34	12 -1

Parts No.	Fig. No.	Ref. No.
26014-060202	3	25
	4	29
26014-060352	33	23 -1
26014-080252	49	28
26014-080302	18	8
26014-080702	39	16 -1
26022-040082	37	41
26033-060202	51	21
26106-060102	6	6
	27	7
	30	4
	44	57
	45	23
26106-060122	1	24
	2	23
	7	6
	16	17
	21	8
	22	16
	25	10
	30	5
	33	23
	34	12
26106-060162	3	16
		28
	4	16
		32
	17	5
	21	15
	22	13
26106-060182	16	17 -1
	35	10
26106-060202	5	9
	17	6
26106-060222	5	9 -1
26106-060302	3	17
	4	17
		17 -1
26106-060352	19	5 -1
26106-060402	3	18
	17	7
	19	5
	20	7
26106-060452	6	7
	7	7
26106-060502	3	19
26106-060602	4	18
26106-060652	3	20
26106-060702	44	12
26106-060802	4	19

Parts No.	Fig. No.	Ref. No.
26106-080102	18	11
26106-080122	4	25
	16	18
	18	11 -1
	33	16
	45	24
	51	23
26106-080142	9	2
		3
26106-080162	16	19
	18	9
	33	17
	36	7
26106-080182	16	18 -1
	50	24
26106-080202	29	12
	33	18
	35	11
26106-080222	23	16
26106-080252	33	13
26106-080402	4	26
26106-080452	12	18
	13	18
	31	15
	32	18
26106-080652	39	16
26106-081052	50	25
26106-081202	49	24
26106-100122	51	22
26106-100202	9	6
26106-100252	48	35
26106-100302	33	28
26106-100502	51	22 -1
26116-050102	44	13
26116-060082	45	20
26116-060302	44	82
26116-060304	44	81
26116-120252	47	45
26206-100252	5	5
26216-060162	4	6
26216-080222	19	4
		4 -1
	20	5
26216-080502	10	18
	19	8
26216-080552	11	18
	20	8
26216-080702	20	6
26366-060002	3	7
	4	7

Parts No. Index

Parts No.	Fig. No.	Ref. No.
26366-060002	16	20
	19	9 -1
26366-080002	10	17
		19 -1
	11	17
	12	19
	13	19
	16	21
	19	9
	33	19
	49	25
	50	26
26450-060202	26	22 -1
		23
26557-050102	14	9
	15	9
26577-060122	31	11
	32	14
26587-040102	37	42
26587-080102	21	16
	22	14
26657-100002	45	21
26716-100002	33	20
26756-050002	46	2
26756-060002	12	8
		12
	13	8
		12
	44	80
26756-100002	33	21
26921-050122	45	22 -1
26979-050052	45	22
26979-050162	13	14
27221-050080	10	6
	11	6
27221-060100	1	5
27231-400000	1	6
27231-450000	2	6
27241-100000	1	7
27241-120000	2	7
27241-250000	1	8
27241-300000	1	9
	2	8
27241-350000	10	7
27241-400000	11	7
27310-070001	11	12 -1
43400-500390	41	15
	42	11
	52	40
43400-500400	44	79

Parts No.	Fig. No.	Ref. No.
43400-500400	52	41
43400-500450	44	73
	52	42
719225-51100	37	1
719260-02800	1	12
719260-02870	1	27
719260-02930	1	15
719260-11520	14	1
719260-11521	14	1 -1
719260-11650	12	5
719260-11660	12	9
719260-11700	10	1
719260-14580	21	1
719260-21700	23	1
719260-23100	24	41
719260-23600	24	58
719260-23610	24	54
719270-22500	24	3
719270-22501	24	3 -1
719270-22540	24	11
719270-22541	24	11 -1
719270-22820	24	9
719288-01540	6	1
719288-01560	1	1
719288-92600	52	1
719288-92601	52	1 -1
719288-92602	52	1 -2
719370-01610	3	1
719600-01541	7	1 B
719600-01542	7	1 B-1
719610-01560	2	1
719620-02800	2	10
719620-02870	2	26
719620-02930	2	13
719620-11520	15	1
719620-11521	15	1 -1
719620-11650	13	5
719620-11660	13	9
719620-11701	11	1 A
		1 B
719620-11702	11	1 B-1
719620-14581	22	1 A
719620-22500	24	23
719620-22540	24	31
719620-22820	24	29
719620-23100	24	42
719620-23610	24	55
719620-53100	38	1
719621-51100	37	2
719631-01540	7	1 A-1

Parts No.	Fig. No.	Ref. No.
719660-14590	21	9
	22	7
719660-21700	23	2
719688-01540	7	1 A
719688-11700	11	1 A-1
719688-92600	52	2
719688-92601	52	2 -1
719688-92602	52	2 -2
933110-00100	51	14
933110-00200	51	15
933110-00301	51	16
X0280210230	47	8
X0280630011	47	2
X0281003751	47	3
X0282001531	47	4
X0283005050	47	7
X0283060061	47	16
X0283270140	47	9
X0283711420	47	17
X0283715030	47	10
X0283810040	47	11
X0284004910	47	18
X0285040631	47	19
X0285100460	47	20
X0534006460	47	22
X0534040320	47	23
X0534490120	47	24
X0534490230	47	25
X0535050620	47	26
X0535130241	47	28
X0535130320	47	27
X0536600401	47	29
X2114275070	48	30
X2114283500	48	33
X2114430010	48	14
X2114455040	48	19
X2114531200	48	12
X2114535200	48	15
		21
X2114586700	48	32
X2114660130	48	27
X2114680050	48	31
X2114710080	48	2
X2114715500	48	7
X2114780060	48	22
X2114811000	48	3
X2114821500	48	13
X2114831300	48	17
X2114866060	48	20
X2114921040	48	11

Parts No.	Fig. No.	Ref. No.
X2114931400	48	18
X2114990010	48	16
X6201SD	49	3
X6202BM	49	16
X9019008651	47	36
X9025808001	47	37
X9151005141	47	30
X9490071810	47	38
X9490071970	47	39
X9490170900	47	31
X9490200710	47	40
X9490423330	47	41 -1
X9490441303	47	32
X9490441312	47	33
X9490471500	47	41
X9490502820	47	34
X9490561370	47	42
X9490721080	47	12
X9491001360	47	5
X9491001860	47	6
X9491200240	47	43
X9491402100	47	35
X9491703371	47	13
X9491703380	47	44
X9491704260	47	14
X9491730461	47	21
XB495469B	49	21
XL12010001	49	17
XL12013262	49	9
XL1201510	49	18
XL1202401	49	14
XL12031001	49	2
XL12033011	49	6
XL1209200	49	4
XL1254801	49	19
XL1255801	49	20
XL13513134	49	11
XL13513152	49	7
XL13514041	49	15
XL13533004	49	5
XL1354326	49	8
XL1356360	49	13
XL1358320	49	12
XTR1Z63	49	10