YANMAR

PARTS CATALOG

0CS10-M28503EN

Last update May., 2013

PREFACE

1. This Parts Catalog carries all parts incorporated in YANMAR Model YEG12H, 15H, 25H, 35H generators manufactured since March, 1989 & YEG8HS, 10HS, 20HS, 24HS generators manufactured since August, 1992.

2. Each illustration corresponds to the parts list on the following page.

3. When ordering parts, clearly write down the model and serial number of the generator and or engine , as well as the name and number of each part in your order sheet. This will help insure reliable delivery of the parts you have ordered.

4. Model, Type and Mounted Engine.

Model Name	Phase	Engine Model	No. of cyl. - Bore×Stroke
YEG12H	3	3TN66E - GB2	3 - 66×64.2
YEG15H	3	3TNA72E - GB2	3 - 72×72
YEG25H	3	3TN84E - GB2	3 - 84×86
YEG35H	3	4TN84E - GB2	4 - 84×86
YEG8HS	1	3TN66E - GB2	3 - 66×64.2
YEG10HS	1	3TNA72E - GB2	3 - 72×72
YEG20HS	1	3TN84E - GB2	3 - 84×86
YEG24HS	1	4TN84E - GB2	4 - 84×86

Note : YEG12H - P:Pipe frame Type, YEG12H - B:Bonnet Type,
YEG12H - BS:Bonnet Silent Type.

5.

	Pub No.	Published	Remarks
1st edition	000Y00S2850	July, 1989	Scrap Oid edition
1st revised	000Y00S2851	June, 1992	Scrap Oid edition
1st edition	000Y00S3270	October, 1992	Scrap Oid edition
2nd revised	000Y00S2852	February, 1994	Scrap Oid edition
3rd revised	000Y00S2853	December, 1996	

Directions for the Parts Catalog.

1.This Parts Catalog shows both standard and optional parts.
2.Parts may change without prior notice.
3.The following is an example of the Parts Catalog format.

0CF10-G21601 29. FUEL INJECTION PUMP(W/BOOST)

(A)=4JH-DT
(B)=4JH-DTZ
(C)=4JH-DTZP
(D)=4JH-DTZA
(E)=4JH-DTZY
(F)=

① REF.	② LEV.	PARTS NO.	DESCRIPTION	Q'TY (A)	(B)	(C)	(D)	(E)	(F)	③ I	⑤ R
1	1	729595-51390	FUEL INJECTION PUMP	1	1	1	1	1			1
1-1	1	729595-51391	FUEL INJECTION PUMP	1	1	1	1	1		N	1
	(A=E00185)	(B=E00200)									
3	2	26022-060162	SCREW M 6X 16	9	9	9	9	9			
3-1 ④	2	26022-060162	SCREW M 6X 16	4	4	4	4	4		K	
	(A=E00156)	(B=E00156)	(C=E00156) (D=E00156)	(E=E00156)							
4	2	129470-51040	CAMSHAFT	1	1	1	1	1			
5	2	122710-51050	BEARING, ROLLER	2	2	2	2	2			
6	2	129470-51060	RETAINER	1	1	1	1	1			

Remarks
(1) BOOST COMPEMSATOR TYPE. OPTIONAL PART, TO E00155,(4JH-DT, 4JH-DTZ

①Ref. No.

The Ref. No. listed may not be in accordance with the illustration Ref. No.

(Ex.) Illustration No. 1 List Ref No. 1 (Before change) → 1- 1 (After change)

For interchangeable symbols N, R and K, illustrations for new parts may be abbreviated.

②Lev. (Level)

Level indication
The numbers below indicate the level of relativity towards the main part.
1 ----- Main parts (Assembly parts)
2 ----- Sub component included in " 1 ".
3 ----- Sub component included in " 2 ".
Note) Parts that are not for sale are partially illustrated but not listed.

③Interchangeability Symbol

When a part change takes place, one of the following interchangeability symbols is indicated beside the part.

Symbol	Interchangeability	Contents note
N	Old ← Yes / No → New	New Part is interchangeable for Old Part but Old Part is not interchangeable for New Part.
Q	Old ← No / Yes → New	New Part is not interchangeable for Old Part but Old Part is interchangeable for New Part.
R	Old ← Yes / Yes → New	New/ Old Parts are both interchangeable.
S	Old ← No / No → New	New/ Old Parts are both not interchangeable.
W		Part newly added.
Z		Part discontinued.
F		Not interchangeable by a single part but interchangeable together with related parts.
K		Changes only for used parts quantities.

④Effective Machine No.

When a part changes, the effective Machine No. will be indicated in the (A)-(F) column.

Product Symbol	Product No.	Product Symbol	Product No.
C	Clutch No. Compressor No.	F	Machine No. (Agricultural Equip.)
D	Drive No.	M	Machine No.
E	Engine No.		

Note 1) A date may follow the symbol. (Ex.) 1996.01
Note 2) " XXXXX " and " ZZZZZ " are for parts that could not be predicted or for engine models that could not be identified.
Note 3) (A=E00185) is the E (Engine Serial Number) for the column (A) model (in this case 4JH-DT) after the parts design change.

⑤Remarks

Figures or alphabets (symbols) are entered in the remarks column.
The comments (remarks) on parts that are indicated at the bottom of the illustration are the same symbols as those stated above.

Contents

0CS10-M28503

Fig. No. Fig. Name

ENGINE 3TN66E-GB2

1. CYLINDER BLOCK
2. GEAR HOUSING
3. FLYWHEEL HOUSING & OIL SUMP
4. CYLINDER HEAD
5. SUCTION MANIFOLD & AIR CLEANER
6. EXHAUST MANIFOLD & SILENCER
7. CAMSHAFT & DRIVING GEAR
8. CRANKSHAFT & PISTON
9. LUB.OIL SYSTEM
10. COOLING WATER SYSTEM
11. FUEL INJECTION DEVICE
12. FUEL PIPE
13. GOVERNOR
14. ENGINE STOP DEVICE
15. STARTING MOTOR
16. GENERATOR
17. ELECTRIC PART
18. GASKET SET(OPTIONAL) & TOOL

ENGINE 3TNA72E-GB2

19. CYLINDER BLOCK
20. GEAR HOUSING
21. LUB.OIL SUMP
22. CYLINDER HEAD & BONNET
23. SUCTION MANIFOLD & AIR CLEANER
24. EXHAUST MANIFOLD & SILENCER
25. CAMSHAFT & DRIVING GEAR
26. CRANKSHAFT & PISTON
27. LUB. OIL SYSTEM
28. COOLING WATER SYSTEM
29. FUEL INJECTION PUMP
30. FUEL PIPE
31. GOVERNOR
32. ENGINE STOP DEVICE
33. STARTING MOTOR
34. GENERATOR
35. ELECTRIC PART
36. GASKET SET(OPTIONAL) &TOOL

ENGINE 3TN84E-GB2

37. CYLINDER BLOCK
38. GEAR HOUSING
39. FLYWHEEL HOUSING & OIL SUMP
40. CYLINDER HEAD & BONNET
41. SUCTION MANIFOLD & AIR CLEANER
42. EXHAUST MANIFOLD & SILENCER
43. CAMSHAFT & DRIVING GEAR
44. CRANKSHAFT & PISTON
45. LUB.OIL SYSTEM

Contents

0CS10-M28503

Fig. No. Fig. Name

46. COOLING WATER SYSTEM
47. THERMOSTAT
48. FUEL INJECTION PUMP
49. FUEL INJECTION PIPE
50. FUEL PIPE
51. GOVERNOR
52. ENGINE STOP DEVICE
53. STARTING MOTOR
54. GENERATOR
55. ELECTRIC PART
56. GASKET SET(OPTIONAL) & TOOL

ENGINE 4TN84E-GB2

57. CYLINDER BLOCK
58. GEAR HOUSING
59. FLYWHEEL HOUSING & OIL SUMP
60. CYLINDER HEAD & BONNET
61. SUCTION MANIFOLD & AIR CLEANER
62. EXHAUST MANIFOLD & SILENCER
63. CAMSHAFT & DRIVING GEAR
64. CRANKSHAFT & PISTON
65. LUB. OIL PUMP
66. COOLING WATER SYSTEM
67. THERMOSTAT
68. FUEL INJECTION PUMP

Fig. No. Fig. Name

69. FUEL INJECTION PIPE
70. FUEL PIPE
71. GOVERNOR
72. ENGINE STOP DEVICE
73. STARTING MOTOR
74. GENERATOR
75. ELECTRIC PART
76. GASKET SET(OPTIONAL) & TOOL

YEG12-35H,8-20HS(-BS

77. GENERATOR
78. INSTRUMENT PANEL
79. COMMONBED FRAME
80. BONNET
81. GENERATOR
82. INSTRUMENT PANEL(PREVIOUS)
83. INSTRUMENT PANEL(NEW)
84. GENERATOR
85. INSTRUMENT PANEL
86. BONNET (YEG12H/15H)
87. BONNET (YEG25H/35H)
88. GENERATOR
89. INSTRUMENT PANEL
90. BONNET (YEG8HS/10HS)
91. BONNET (YEG20HS/24HS)

Fig.1. CYLINDER BLOCK

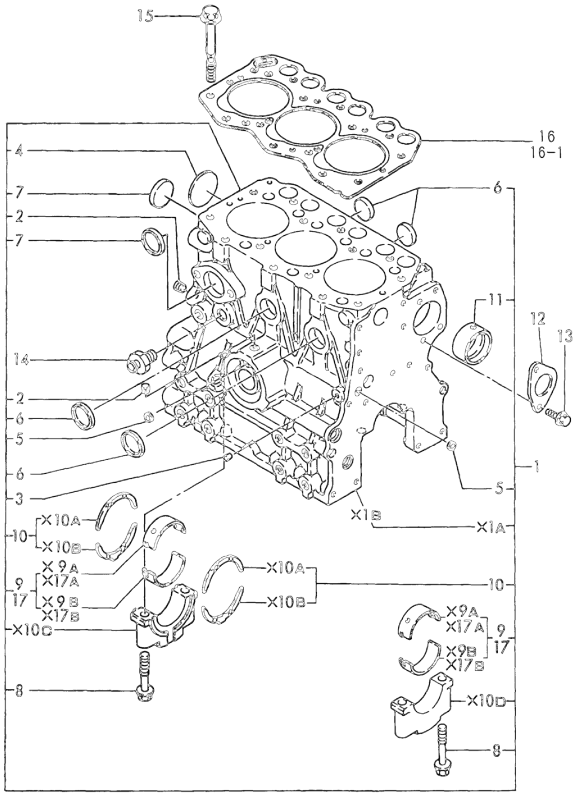

Remarks
(1) UNDER-SIZE(U.S.=0.25) PART.
(A) THIS PART IS ALSO SOLD BY GASKET SET(FIG 18.REF NO.9-2,P/# 719288 -92603.)

(A)=3TN66E-GB2
(B)=3TNA72E-GB2
(C)=3TN84E-GB2
(D)=4TN84E-GB2
(E)=
(F)=

No.	Lev.	Parts No.	Description	Q'ty (A)	(B)	(C)	(D)	(E)	(F)	I	R
1	1	719270-01560	BLOCK ASSY, CYLINDER	1							
2	2	124060-01050	PLUG, PT1/8	2							
3	2	27221-060100	PLUG, 6X10	1							
4	2	27231-400000	PLUG 40	1							
5	2	27241-100000	PLUG, 10	2							
6	2	27241-250000	PLUG, 25	4							
7	2	27241-300000	PLUG 30	2							
8	2	119260-02020	BOLT, METAL CAP	8							
9	2	119260-02800	BEARING, MAIN	4							
10	2	119260-02930	BEARING, THRUST	2							
11	2	119260-02410	BUSH, CAMSHAFT	1							
12	1	119620-02450	BEARING, THRUST	1							
13	1	26106-060122	BOLT, M6X 12 PLATED	2							
14	1	121550-49111	JOINT, PT1/4	1							
15	1	119260-01200	BOLT, HEAD	14							
16	1	119255-01340	GASKET, HEAD	1							
16-1	1	119225-01340	GASKET, HEAD	1						R	A
	(A=E/# 40141)										
17	1	119260-02870	BEARING, 0.25 US	4							1

N:Old ←Yes/No→ New. Q:Old ←No/Yes→ New. R:Old ←Yes/Yes→ New. S:Old ←No/No→ New. W:Add. Z:Discontinued. F:Interchangeable by set. K:Q'ty Change

Copyright (C) YANMAR GLOBAL CS CO., LTD. All RightsReserved.

Fig.2. GEAR HOUSING

(A)=3TN66E-GB2
(B)=3TNA72E-GB2
(C)=3TN84E-GB2
(D)=4TN84E-GB2
(E)=
(F)=

No.	Lev.	Parts No.	Description	Q'ty (A)	(B)	(C)	(D)	(E)	(F)	I	R
1	1	119260-01490	CASE ASSY, GEAR	1							
2	2	119260-01510	PLUG	1							
3	2	121450-01560	STUD, M8X22	4							
4	2	22351-040010	PIN, SPRING 4.0X10	2							
5	1	119260-01590	COVER ASSY,GEAR CASE	1						W	
	(A=E/# 23928)										
6	2	119620-01800	SEAL, OIL	1							
7	1	119660-01911	PIPE, KNOCK	4							
8	1	119620-01950	SHIM SET, ADJUSTING	1							
8-1	1	119623-01950	SHIM SET, ADJUSTING	1						N	
	(A=E/# 47464)										
9	1	194990-22050	NUT, M8	4							
10	1	24311-000120	O-RING, 1AP12.0	2							A
11	1	26106-060162	BOLT, M6X 16 PLATED	5							
12	1	26106-060302	BOLT, M6X 30 PLATED	5							
13	1	26106-060402	BOLT, M6X 40 PLATED	3							
14	1	26106-060502	BOLT, M6X 50 PLATED	4							
15	1	26106-060652	BOLT, M6X 65 PLATED	6							
16	1	119660-01551	COVER	1							
17	1	119660-01561	GASKET	1							
17-1	1	119660-01562	GASKET	1						N	A
	(A=E/# 23060)										
18	1	119660-01570	STUD, M6X12	4							
19	1	124160-01751	COVER, FILLER	1							
20	1	24311-000320	O-RING, 1AP32.0	1							A
21	1	26366-060002	NUT, M6	4							
22	1	129150-91400	GEAR	1							
24	2	24341-000240	O-RING, 1AS24.0	1							
25	1	26106-060162	BOLT, M6X 16 PLATED	2							

Remarks
(A) THIS PART IS ALSO SOLD BY GASKET SET(FIG 18.REF NO.9-2,P/# 719288 -92603.)

N:Old ←Yes/No→ New. Q:Old ←No/Yes→ New. R:Old ←Yes/Yes→ New. S:Old ←No/No→ New. W:Add. Z:Discontinued. F:Interchangeable by set. K:Q'ty Change

Copyright (C) YANMAR GLOBAL CS CO., LTD. All RightsReserved.

Fig.3. FLYWHEEL HOUSING & OIL SUMP

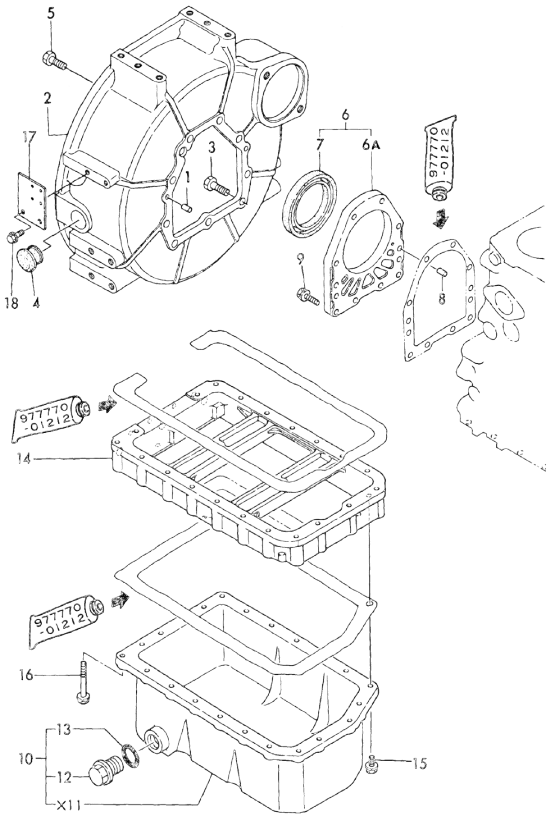

(A)=3TN66E-GB2
(B)=3TNA72E-GB2
(C)=3TN84E-GB2
(D)=4TN84E-GB2
(E)=
(F)=

No.	Lev.	Parts No.	Description	Q'ty (A)	(B)	(C)	(D)	(E)	(F)	I	R
1	1	129100-01580	PIN, M8X16	2							
2	1	119600-01600	HOUSING, FLYWHEEL	1							
3	1	121120-01620	BOLT, M10X28	3							
4	1	119620-01750	CAP	1							
5	1	26206-100252	BOLT, M10X 25 PLATED	6							
6	1	119660-01640	CASE ASSY, OIL SEAL	1						W	
	(A=E/# 23928)										
6A	2	119660-01651	CASE, OIL SEAL	1							
7	2	124085-02220	SEAL, OIL	1							
8	1	119620-01620	PIN, M6X10	2							
9	1	26106-060222	BOLT, M6X 22 PLATED	10							
10	1	719288-01540	SUMP ASSY, OIL	1							
10-1	1	119260-01770	SUMP ASSY, OIL	1						R	
	(A=EXXX)										
12	2	121400-01640	PLUG, 16	1							
13	2	24311-000180	O-RING, 1AP18.0	1							A
14	1	119454-01721	SPACER, OIL SUMP	1							
15	1	26106-060102	BOLT, M6X 10 PLATED	3							
16	1	26106-060452	BOLT, M6X 45 PLATED	20							
17	1	129111-67010	SUPPORT, WIRE	1							
18	1	26106-080162	BOLT, M8X 16 PLATED	2							

Remarks
(A) THIS PART IS ALSO SOLD BY GASKET SET(FIG.18,REF.NO.9-2, P/# 719288-92603).

N:Old ←Yes/No→ New. Q:Old ←No/Yes→ New. R:Old ←Yes/Yes→ New. S:Old ←No/No→ New. W:Add. Z:Discontinued. F:Interchangeable by set. K:Q'ty Change

Copyright (C) YANMAR GLOBAL CS CO., LTD. All RightsReserved.

Fig.4. CYLINDER HEAD

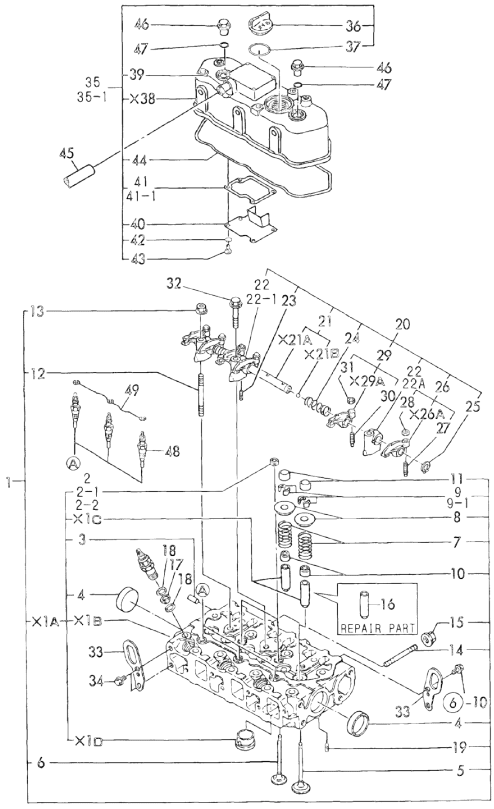

(A)=3TN66E-GB2
(B)=3TNA72E-GB2
(C)=3TN84E-GB2
(D)=4TN84E-GB2
(E)=
(F)=

No.	Lev.	Parts No.	Description	Q'ty (A)	(B)	(C)	(D)	(E)	(F)	I	R
1	1	719260-11700	HEAD ASSY, CYLINDER	1							
2	3	121850-11860	PLUG, PT1/4	2							
2-1	3	23871-020000	PLUG, R02	2						N	
	(A=E# 26817)										
2-2	3	23871-030000	PLUG, R03	2						S	
	(A=E# 48767)										
3	3	27221-050080	PLUG, 5X 8	1							
4	3	27241-350000	PLUG, 35	2							
5	2	119260-11100	VALVE, INTAKE	3							
6	2	119260-11110	VALVE, EXHAUST	3							
7	2	114250-11120	SPRING, VALVE	6							
8	2	114250-11180	RETAINER, SPRING	6							
9	2	114250-11190	COTTER	12							
9-1	2	27310-055000	COTTER	12						R	
	(A=E# 45722)										
10	2	119260-11340	SEAL, VALVE STEM	6							A
11	2	119260-11370	CAP, VALVE	6							
12	2	119620-11350	STUD	2							
13	2	26366-080002	NUT, M8	2							
14	2	26216-060402	STUD, M6X 40	2							
15	2	26366-060002	NUT, M6	2							
16	1	119260-11800	GUIDE, VALVE	6							1
17	1	119600-11450	PROTECTOR, NOZZLE	3							A
18	1	119600-11460	GASKET, NOZZLE	6							A
19	1	22351-060012	PIN, SPRING 6.0X12	2							
20	1	119260-11200	SUPPORT ASSY, ARM	1							
21	2	119260-11240	SHAFT ASSY, ROCKER	1							
22	2	119260-11260	SUPPORT, ROCKER ARM	3							
22-1	2	119260-11260	SUPPORT, ROCKER ARM	1						K	
	(A=E# 52259)										
22A	2	119265-11260	SUPPORT, ROCKER ARM	2						W	
	(A=E# 52259)										
23	2	119260-11270	SCREW	1							
24	2	119260-11280	SPRING	2							
25	2	22242-000100	RING, 10	2							
26	2	719260-11650	ARM ASSY, ROCKER	3							
27	3	105010-11230	SCREW, VALVE ADJUST	3							
28	3	26756-060002	NUT, LOCK M6	3							
29	2	719260-11660	ARM ASSY, ROCKER	3							
30	3	105010-11230	SCREW, VALVE ADJUST	3							
31	3	26756-060002	NUT, LOCK M6	3							
32	1	26106-080452	BOLT, M8X 45 PLATED	1							
33	1	119260-07900	LIFTER	2							
34	1	26106-080142	BOLT, M8X 14 PLATED	2							
35	1	719260-11521	BONNET ASSY, HEAD	1							
35-1	1	119260-11330	BONNET ASSY, HEAD	1						N	
	(A=E# 23928)										
36	2	124160-01751	COVER, FILLER	1							
37	2	24311-000320	O-RING, 1AP32.0	1							
39	2	119620-11390	JOINT	1							
40	2	119260-03020	PLATE, SHELTER	1							

Remarks
(1) REPAIR PART.
(A) THIS PART IS ALSO SOLD BY GASKET SET(FIG 18.REF NO.9-2,P/# 719288 -92603.)

N:Old ←Yes/No→ New. Q:Old ←No/Yes→ New. R:Old ←Yes/Yes→ New. S:Old ←No/No→ New. W:Add. Z:Discontinued. F:Interchangeable by set. K:Q'ty Change

++ CONTINUE ++

Copyright (C) YANMAR GLOBAL CS CO., LTD. All RightsReserved.

Fig.4. CYLINDER HEAD

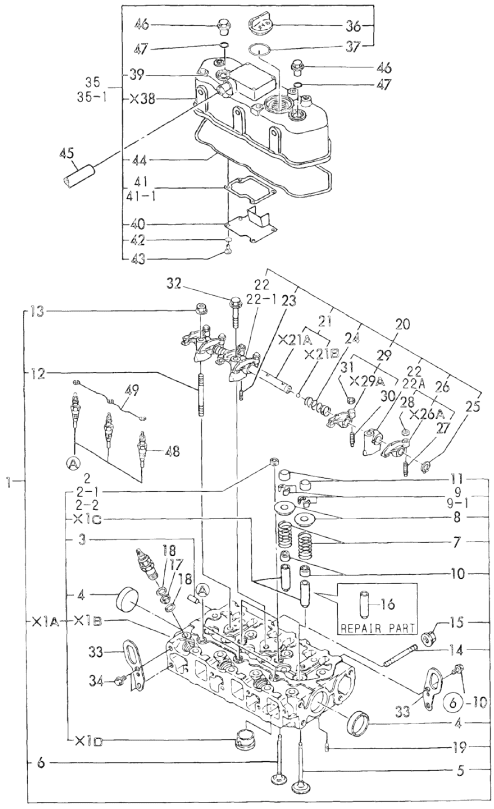

Remarks
(1) REPAIR PART.
(A) THIS PART IS ALSO SOLD BY GASKET SET(FIG 18.REF NO.9-2,P/# 719288 -92603.)

(A)=3TN66E-GB2
(B)=3TNA72E-GB2
(C)=3TN84E-GB2
(D)=4TN84E-GB2
(E)=
(F)=

No.	Lev.	Parts No.	Description	Q'ty (A)	(B)	(C)	(D)	(E)	(F)	I	R
41	2	119260-03030	GASKET	1							
41-1	2	119260-03031	GASKET	1						N	A
	(A=E/# 25073)										
42	2	22217-050000	WASHER, SPRING 5	4							
43	2	26557-050102	SCREW, M5X10	4							
44	2	119260-11310	GASKET, BONNET	1							A
45	1	23065-120500	PIPE, 12X 500	1							
46	1	124160-11360	KNOB	2							
47	1	24311-000120	O-RING, 1AP12.0	2							A
48	1	129795-77800	PLUG, GLOW	3							
49	1	119620-77820	CONNECTOR, GLOW PLUG	1							

N:Old ←Yes/No→ New. Q:Old ←No/Yes→ New, R:Old ←Yes/Yes→ New. S:Old ←No/No→ New. W:Add. Z:Discontinued. F:Interchangeable by set. K:Q'ty Change

Copyright (C) YANMAR GLOBAL CS CO., LTD. All RightsReserved.

Fig.5. SUCTION MANIFOLD & AIR CLEANER

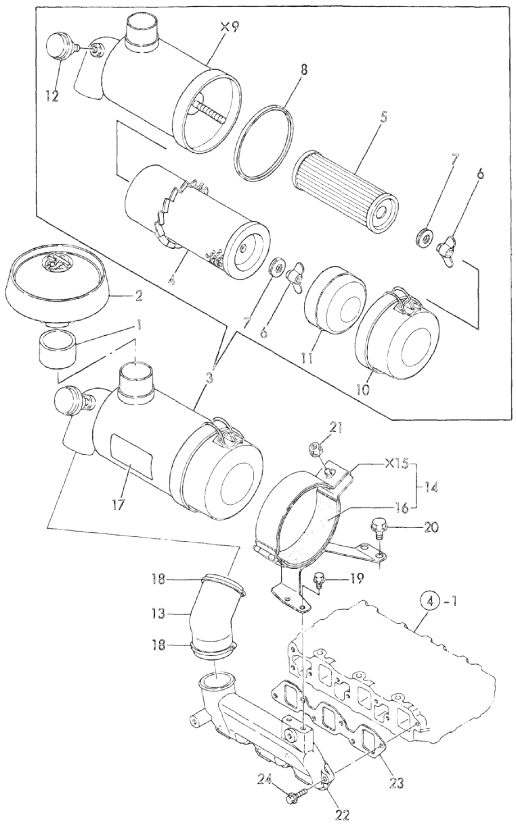

(A)=3TN66E-GB2
(B)=3TNA72E-GB2
(C)=3TN84E-GB2
(D)=4TN84E-GB2
(E)=
(F)=

No.	Lev.	Parts No.	Description	Q'ty (A)	(B)	(C)	(D)	(E)	(F)	I	R
1	1	119288-12050	JOINT, PIPE	1							
2	1	121521-12400	CAP, RAIN	1							
3	1	119249-12500	CLEANER ASSY, AIR	1							
4	2	119631-12520	ELEMENT	1							
5	2	119631-12530	ELEMENT	1							
6	2	119631-12540	NUT	2							
6-1	2	119631-12540	NUT	1						K	
	(A=FROM 1ST)										
7	2	119631-12550	WASHER	2							
7-1	2	119631-12550	WASHER	1						K	
	(A=FROM 1ST)										
8	2	119631-12570	GASKET	1							
10	2	121472-12660	CAP	1							
11	2	121465-12700	RETAINER, ELEMENT	1							
12	2	121492-12950	INDICATOR	1							
13	1	119462-12550	PIPE, AIR INTAKE	1							
14	1	119288-12590	SUPPORT ASSY,CLEANER	1							
16	2	119640-12580	SEAT, RUBBER	2							A
17	1	124764-12600	LABEL, AIR CLEANER	1							
17-1	1	129136-12600	LABEL, AIR CLEANER	1						R	
	(A=E/# 23928)										
18	1	23000-060000	CLAMP, 60	2							
19	1	26106-060122	BOLT, M6X 12 PLATED	2							
20	1	26106-080162	BOLT, M8X 16 PLATED	2							
21	1	26366-060002	NUT, M6	1							
22	1	119288-12100	MANIFOLD, AIR INTAKE	1							
23	1	119260-12110	GASKET, MANIFOLD	1							
23-1	1	119260-12111	GASKET, MANIFOLD	1						N	A
	(A=E/# 25073)										
24	1	26106-060202	BOLT, M6X 20 PLATED	4							

Remarks
(A) THIS PART IS ALSO SOLD BY GASKET SET(FIG 18.REF NO.9-2,P/# 719288 -92603.)

N:Old ←Yes/No→ New. Q:Old ←No/Yes→ New. R:Old ←Yes/Yes→ New. S:Old ←No/No→ New. W:Add. Z:Discontinued. F:Interchangeable by set. K:Q'ty Change

Copyright (C) YANMAR GLOBAL CS CO., LTD. All RightsReserved.

Fig.6. EXHAUST MANIFOLD & SILENCER

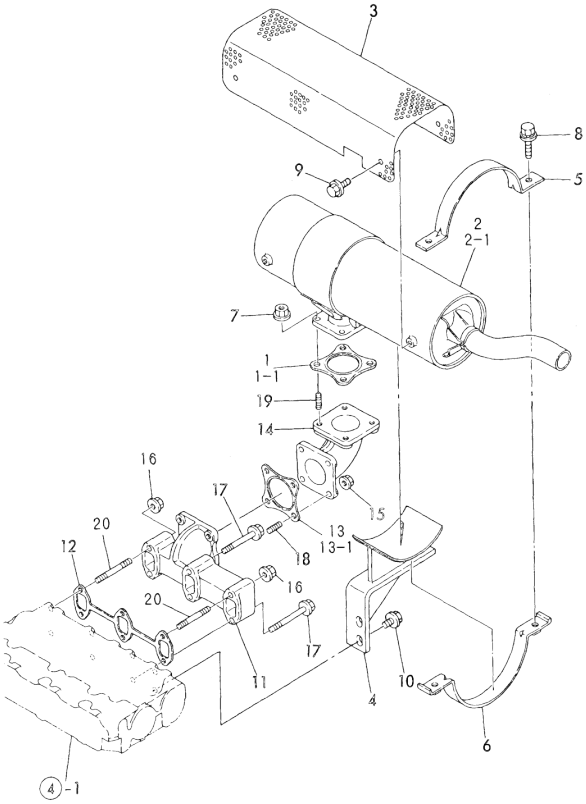

Remarks
(A) THIS PART IS ALSO SOLD BY GASKET SET(FIG 18.REF NO.9-2,P/# 719288 -92603.)

(A)=3TN66E-GB2
(B)=3TNA72E-GB2
(C)=3TN84E-GB2
(D)=4TN84E-GB2
(E)=
(F)=

No.	Lev.	Parts No.	Description	Q'ty (A)	(B)	(C)	(D)	(E)	(F)	I	R
1	1	121000-13200	GASKET, SILENCER	1							
1-1	1	121000-13201	GASKET, SILENCER	1						N	A
	(A=E/# 35138)										
2	1	119288-13500	SILENCER	1							
2-1	1	119288-13501	SILENCER	1						N	
	(A=E/# 53853)										
3	1	119888-13600	COVER, SILENCER	1							
4	1	119288-13650	STAY, SILENCER	1							
5	1	119888-13670	BAND, SILENCER	1							
6	1	119888-13680	BAND, SILENCER	1							
7	1	194990-22050	NUT, M8	4							
8	1	26014-080302	BOLT, M8X 30	2							
9	1	26106-080122	BOLT, M8X 12 PLATED	4							
10	1	26106-080162	BOLT, M8X 16 PLATED	2							
11	1	119260-13100	MANIFOLD, EXHAUST	1							
12	1	119260-13110	GASKET	1							A
13	1	121000-13200	GASKET, SILENCER	1							
13-1	1	121000-13201	GASKET, SILENCER	1						N	A
	(A=E/# 35138)										
14	1	119620-13550	BEND	1							
15	1	194990-22050	NUT, M8	4							
16	1	26366-060002	NUT, M6	2							
17	1	26106-060352	BOLT, M6X 35 PLATED	4							
18	1	26216-080222	STUD, M8X 22	4							
19	1	26216-080222	STUD, M8X 22	4							
20	1	26216-060402	STUD, M6X 40	2							

N:Old ←Yes/No→ New. Q:Old ←No/Yes→ New. R:Old ←Yes/Yes→ New. S:Old ←No/No→ New. W:Add. Z:Discontinued. F:Interchangeable by set. K:Q'ty Change

Copyright (C) YANMAR GLOBAL CS CO., LTD. All RightsReserved.

Fig.7. CAMSHAFT & DRIVING GEAR

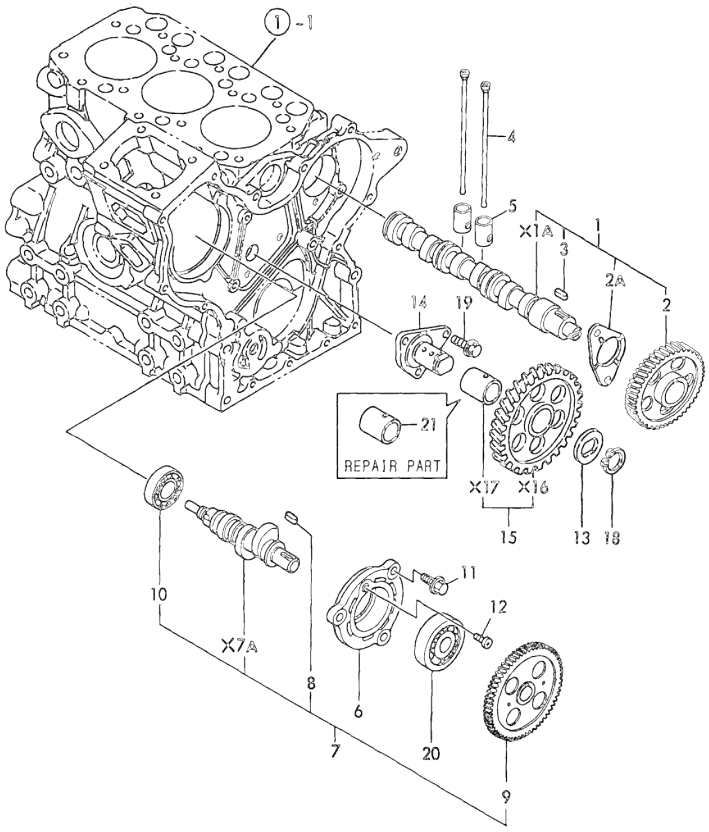

(A)=3TN66E-GB2
(B)=3TNA72E-GB2
(C)=3TN84E-GB2
(D)=4TN84E-GB2
(E)=
(F)=

No.	Lev.	Parts No.	Description	Q'ty (A)	(B)	(C)	(D)	(E)	(F)	I	R
1	1	119260-14580	CAMSHAFT ASSY	1						W	
	(A=EXXX)										
2	2	119260-14100	GEAR, CAMSHAFT	1							
2A	2	119620-02450	BEARING, THRUST	1							
3	2	22512-040120	KEY, 4X 12	1							
4	1	119260-14400	ROD, PUSH	6							
5	1	119260-14200	TAPPET	6							
6	1	119660-01821	BEARING, FUEL CAM	1							
7	1	119225-14200	CAM ASSY	1						W	
	(A=E/# 23928)										
8	2	22512-040120	KEY, 4X 12	1							
9	2	119260-25900	GEAR, PUMP	1							
10	2	24102-063034	BEARING, BALL 6303U	1							
11	1	26106-060162	BOLT, M6X 16 PLATED	3							
12	1	26587-080102	SCREW, M8X10	1							
13	1	119660-25022	RETAINER	1							
14	1	119660-25052	SHAFT, IDLE	1							
15	1	119260-25100	GEAR ASSY, IDLE	1							
18	1	22242-000200	RING, 20	1							
19	1	26106-060122	BOLT, M6X 12 PLATED	3							
20	1	24101-062034	BEARING, BALL 6203	1							
21	1	119620-25912	BUSH	1							1

Remarks
(1) REPAIR PART.

N:Old $\frac{\text{Yes}}{\text{No}}$ New. Q:Old $\frac{\text{No}}{\text{Yes}}$ New. R:Old $\frac{\text{Yes}}{\text{Yes}}$ New. S:Old $\frac{\text{No}}{\text{No}}$ New. W:Add. Z:Discontinued. F:Interchangeable by set. K:Q'ty Change

Copyright (C) YANMAR GLOBAL CS CO., LTD. All RightsReserved.

Fig.8. CRANKSHAFT & PISTON

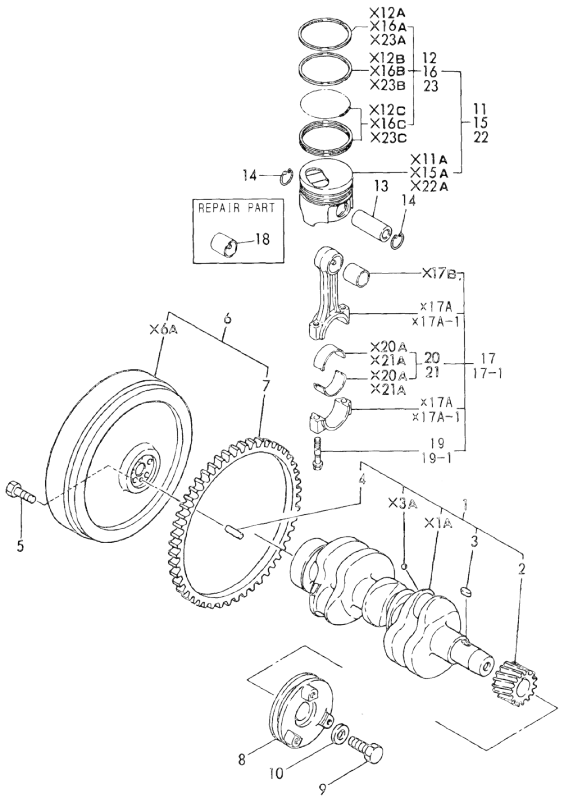

Remarks
(1) OVER-SIZE (O.S=0.25) PART.
(2) REPAIR PART.
(3) UNDER-SIZE (U.S=0.25) PART.
(4) OVER-SIZE (O.S=0.5) PART.

(A)=3TN66E-GB2
(B)=3TNA72E-GB2
(C)=3TN84E-GB2
(D)=4TN84E-GB2
(E)=
(F)=

No.	Lev.	Parts No.	Description	Q'ty (A)	(B)	(C)	(D)	(E)	(F)	I	R
1	1	719260-21700	CRANKSHAFT ASSY	1							
2	2	119260-21200	GEAR, CRANKSHAFT	1							
3	2	22512-040120	KEY, 4X 12	1							
4	2	129100-01580	PIN, M8X16	1							
5	1	121111-21501	BOLT, FLYWHEEL	5							
6	1	119600-21580	FLYWHEEL ASSY	1							
7	2	119865-21600	GEAR, RING	1							
8	1	119260-21650	V-PULLEY	1							
9	1	119621-21680	BOLT, FLANGE 12X1.25	1							
10	1	119620-21941	WASHER	1							
11	1	119270-22091	PISTON ASSY	3							
12	2	719270-22501	RING SET, PISTON	3							
13	1	119260-22300	PIN, PISTON	3							
14	1	105225-22400	CIRCLIP	6							
15	1	719270-22821	PISTON ASSY, 0.25 OS	3							1
16	2	719270-22541	RING SET, 0.25 OS	3							1
17	1	719260-23100	ROD ASSY, CONNECTING	3							
17-1	1	119265-23100	ROD ASSY, CONNECTING	3						N	
	(A=E/# 49473)										
18	2	119260-23910	BEARING, PISTON PIN	3							2
19	2	119260-23200	BOLT, CONNECTING ROD	6							
19-1	2	119265-23200	BOLT, CONNECTING ROD	6						S	
	(A=E/# 49473)										
20	2	719260-23600	BEARING, CRANK PIN	3							
21	1	719260-23610	BEARING ASSY, 0.25	3							3
22	1	119270-22920	PISTON ASSY, 0.50 OS	3							4
23	2	119270-22970	RING SET, 0.50 OS	3							4

N:Old ←Yes/No→ New. Q:Old ←No/Yes→ New. R:Old ←Yes/Yes→ New. S:Old ←No/No→ New. W:Add. Z:Discontinued. F:Interchangeable by set. K:Q'ty Change

Copyright (C) YANMAR GLOBAL CS CO., LTD. All RightsReserved.

Fig.9. LUB.OIL SYSTEM

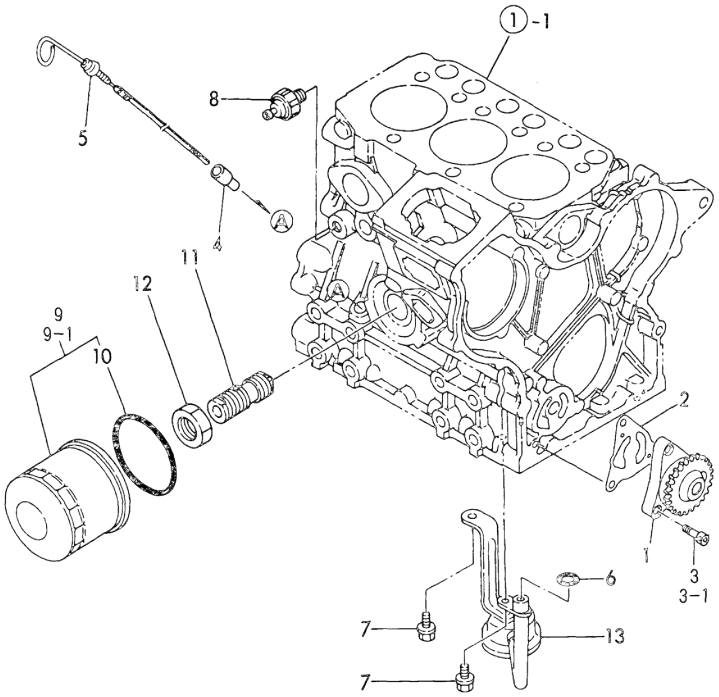

(A)=3TN66E-GB2
(B)=3TNA72E-GB2
(C)=3TN84E-GB2
(D)=4TN84E-GB2
(E)=
(F)=

No.	Lev.	Parts No.	Description	Q'ty (A)	(B)	(C)	(D)	(E)	(F)	I	R
1	1	119260-32000	PUMP ASSY, OIL	1							
2	1	119660-32020	GASKET, PUMP	1							A
3	1	26013-060202	BOLT, M6X 20	3							
3-1	1	26450-060202	BOLT, M6X 20	3						N	
	(A=E/# 26817)										
4	1	121520-34810	GUIDE, DIPSTICK	1							
5	1	119600-34820	DIPSTICK, OIL	1							
6	1	24311-000120	O-RING, 1AP12.0	1							A
7	1	26106-060122	BOLT, M6X 12 PLATED	2							
8	1	124160-39450	SWITCH, 0.5KG	1							
9	1	119660-35150	FILTER, LUB. OIL	1							
9-1	1	119305-35150	FILTER, OIL	1						N	
	(A=EXXX)										
10	2	124450-35110	O-RING	1						Z	A
	(A=EXXX)										
11	1	119225-35300	VALVE ASSY	1							
12	1	129150-35350	NUT	1							
13	1	119260-35081	PIPE, OIL INLET	1							

Remarks
(A) THIS PART IS ALSO SOLD BY GASKET SET(FIG 18.REF NO.9-2,P/# 719288 -92603.)

N:Old ←Yes/No→ New. Q:Old ←No/Yes→ New. R:Old ←Yes/Yes→ New. S:Old ←No/No→ New. W:Add. Z:Discontinued. F:Interchangeable by set. K:Q'ty Change

Copyright (C) YANMAR GLOBAL CS CO., LTD. All RightsReserved.

Fig.10. COOLING WATER SYSTEM

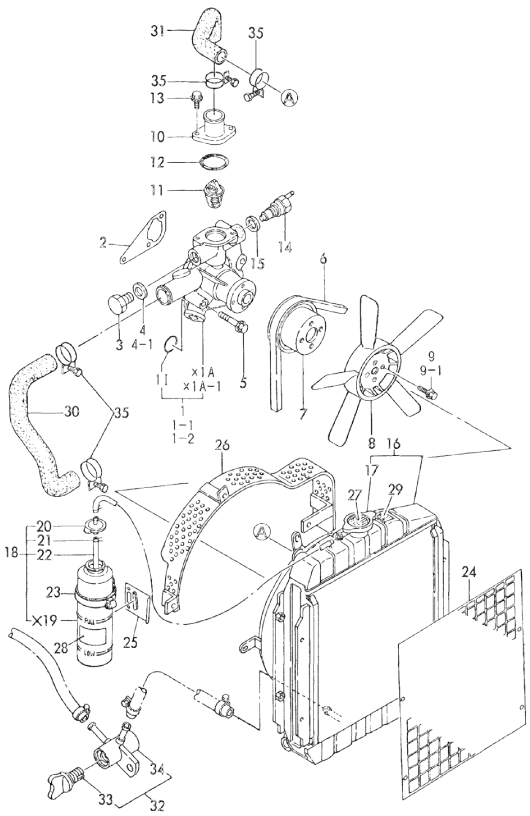

No.	Lev.	Parts No.	Description	Q'ty (A)	(B)	(C)	(D)	(E)	(F)	I	R
			(A)=3TN66E-GB2 (B)=3TNA72E-GB2 (C)=3TN84E-GB2				(D)=4TN84E-GB2 (E)= (F)=				
1	1	119260-42000	PUMP ASSY, WATER	1							
1-1	1	119260-42001	PUMP ASSY, WATER	1						N	
	(A=E/# 25073)										
1-2	1	119260-42002	PUMP ASSY, WATER	1						N	
	(A=E/# 54877)										
1I	2	119225-42320	O-RING	1							A
2	1	119260-42020	GASKET, WATER PUMP	1							A
3	1	121450-42450	PLUG, M16	1							
4	1	23414-160021	GASKET, 16X1.0	1							
4-1	1	124465-44950	GASKET, 16	1						N	A
	(A=EXXX)										
5	1	26106-080452	BOLT, M8X 45 PLATED	3							
6	1	104514-42780	V-BELT, HM33	1							
7	1	119620-42350	V-PULLEY	1							
8	1	121023-44740	FAN, COOLING	1							
9	1	26106-060122	BOLT, M6X 12 PLATED	4							
9-1	1	26014-060162	BOLT, M6X 16	4						N	
	(A=EXXX)										
10	1	119260-49530	COVER, THERMOSTAT	1							
11	1	119260-49800	THERMOSTAT, 71	1							
12	1	24321-000350	O-RING, 1AG35.0	1							A
13	1	26106-060182	BOLT, M6X 18 PLATED	2							
14	1	121250-44901	SWITCH, 110	1							
15	1	124465-44950	GASKET, 16	1							
16	1	119260-44500	RADIATOR	1							
17	2	123682-44210	CAP, RADIATOR	1							
18	1	124450-44510	TANK ASSY, SUB	1							
20	2	124450-44530	CAP	1							
21	2	124450-44560	RETAINER	1							
22	2	23061-070230	PIPE, 7X 230	1							
23	1	124450-44550	BAND	1							
24	1	119249-44590	PROTECTOR	1							
25	1	121256-44600	BRACKET, SUB TANK	1							
26	1	119288-44760	GUARD	1							
27	1	124764-44800	LABEL, RADIATOR	1							
28	1	124764-44810	LABEL, SUB TANK	1							
29	1	121400-44910	LABEL, RADIATOR	1							
30	1	119288-49010	PIPE, WATER	1							
31	1	119280-49020	PIPE, WATER	1							
32	1	129150-49100	COCK ASSY, 3-WAY	1							
33	2	129150-49080	COCK, DRAIN	1							
34	2	129150-49090	BODY, 3-WAY COCK	1							
35	1	23010-038000	CLAMP, 38	4							

Remarks
(A) THIS PART IS ALSO SOLD BY GASKET SET(FIG 18.REF NO.9-2,P/# 719288 -92603.)

N:Old ←Yes/No→ New. Q:Old ←No/Yes→ New. R:Old ←Yes/Yes→ New. S:Old ←No/No→ New. W:Add. Z:Discontinued. F:Interchangeable by set. K:Q'ty Change

Copyright (C) YANMAR GLOBAL CS CO., LTD. All RightsReserved.

Fig.11. FUEL INJECTION DEVICE

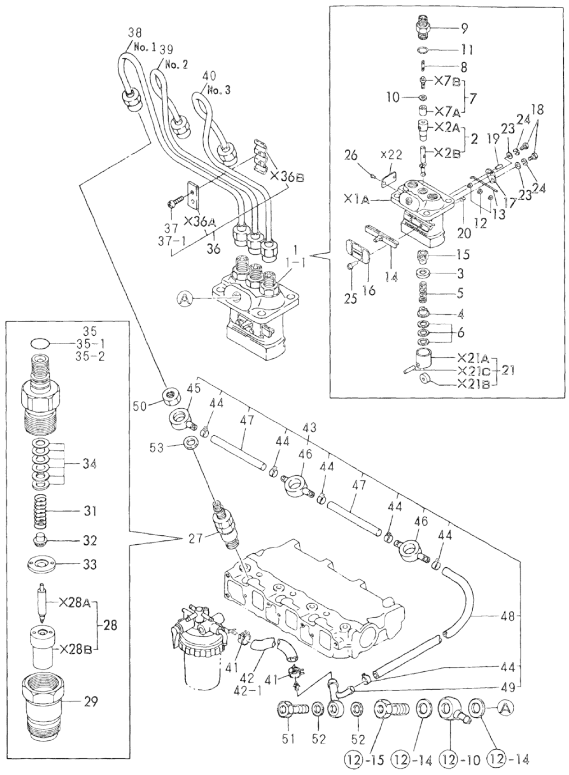

Remarks
(1) GOVERNOR ASSY(FIG NO.13)IS INCORPORATED IN THIS FUEL INJECTION PUMP ASSY(REF NO.1).
(A) THIS PART IS ALSO SOLD BY GASKET SET(FIG 18.REF NO.9-2,P/# 719288 -92603.)

(A)=3TN66E-GB2
(B)=3TNA72E-GB2
(C)=3TN84E-GB2
(D)=4TN84E-GB2
(E)=
(F)=

No.	Lev.	Parts No.	Description	Q'ty (A)	(B)	(C)	(D)	(E)	(F)	I	R
1	1	719246-51100	PUMP ASSY, INJECTION	1							1
1-1	1	719225-51700	PUMP ASSY, INJECTION	1						N	1
	(A=EXXX)										
2	2	119225-51100	PLUNGER ASSY	3							
3	2	119620-51170	RETAINER, SPRING A	3							
4	2	119620-51180	RETAINER, SPRING B	3							
5	2	119620-51190	SPRING, PLUNGER	3							
6	2	119620-51250	SHIM SET	3							
7	2	119225-51300	VALVE ASSY, DELIVERY	3							
8	2	105546-51330	SPRING, DELIVERY	3							
9	2	119620-51340	HOLDER, DELIVERY	3							
10	2	119620-51350	GASKET	3							A
11	2	119620-51370	O-RING	3							A
12	2	119620-51450	PIECE	3							
13	2	119620-51461	PIN	1							
14	2	119660-51500	RACK, CONTROL	1							
15	2	119620-51510	PINION	3							
16	2	119660-51530	RETAINER, RACK	1							
17	2	119620-51650	PLATE	2							
18	2	119620-51660	SCREW	2							
19	2	119620-51670	PIN	2							
20	2	119620-51680	PIN	1							
21	2	119620-51700	TAPPET ASSY	3							
23	2	22137-040000	WASHER, 4	2							
24	2	22217-040000	WASHER, SPRING 4	2							
25	2	26022-040082	SCREW, M4X 8	4							
26	2	26587-040102	SCREW, M4X10	2							
27	1	719620-53100	VALVE ASSY,INJECTION	3							
28	2	119620-53000	VALVE ASSY,INJECTION	3							
29	2	119620-53080	NUT, NOZZLE	3							
31	2	119620-53120	SPRING, NOZZLE	3							
32	2	114250-53130	SEAT, SPRING	3							
33	2	119620-53140	SPACER, VALVE STOP	3							
34	2	114250-53400	SHIM SET	3							
35	2	129155-61830	O-RING, S10	3							
35-1	2	129155-51580	O-RING	3						N	
	(A=E/# 35491)										
35-2	2	129155-61830	O-RING, S10	3						N	A
	(A=E/# 48767)										
36	1	129150-59120	RETAINER, PIPE	1							
37	2	129150-59130	BOLT, M4X12	2							
37-1	2	129150-59131	BOLT, M4X14	2						N	
	(A=E/# 42681)										
38	1	119225-59810	PIPE ASSY, INJECTION	1							
39	1	119260-59820	PIPE ASSY, INJECTION	1							
40	1	119260-59830	PIPE ASSY, INJECTION	1							
41	1	124766-59050	CLIP, HOSE 12	2							
42	1	121250-59080	PIPE, FUEL D12X180	1							
42-1	1	119225-59560	PIPE, FUEL	1						N	
	(A=E/# 17976)										
43	1	119249-59540	PIPE ASSY, RETURN	1							

N:Old $\frac{\text{Yes}}{\text{No}}$ New. Q:Old $\frac{\text{No}}{\text{Yes}}$ New. R:Old $\frac{\text{Yes}}{\text{Yes}}$ New. S:Old $\frac{\text{No}}{\text{No}}$ New. W:Add. Z:Discontinued. F:Interchangeable by set. K:Q'ty Change

++ CONTINUE ++

Copyright (C) YANMAR GLOBAL CS CO., LTD. All RightsReserved.

Fig.11. FUEL INJECTION DEVICE

(A)=3TN66E-GB2
(B)=3TNA72E-GB2
(C)=3TN84E-GB2
(D)=4TN84E-GB2
(E)=
(F)=

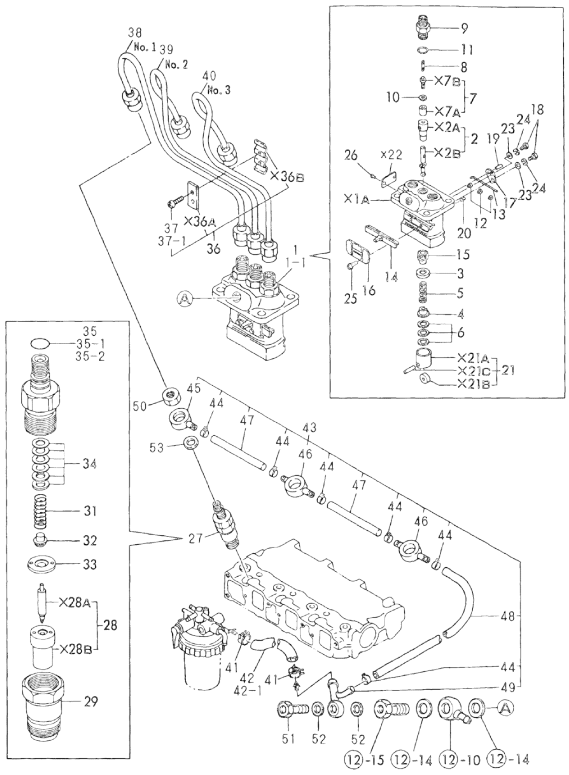

No.	Lev.	Parts No.	Description	Q'ty (A)	(B)	(C)	(D)	(E)	(F)	I	R
44	2	124066-59100	CLIP, HOSE 8	6							
45	2	119260-59520	JOINT	1							
46	2	119260-59530	JOINT	2							
47	2	119260-59550	PIPE, FUEL	2							
48	2	119642-59550	PIPE, FUEL RETURN	1							
49	2	119642-59570	JOINT, OVER FLOW	1							
50	1	119620-59700	NUT, NOZZLE	3							
51	1	124550-59820	BOLT, PIPE JOINT M8	1							
52	1	23414-080012	GASKET, 8X1.0	2							
53	1	23414-140000	GASKET, 14X1.0	3							

Remarks
(1) GOVERNOR ASSY(FIG NO.13)IS INCORPORATED IN THIS FUEL INJECTION PUMP ASSY(REF NO.1).
(A) THIS PART IS ALSO SOLD BY GASKET SET(FIG 18.REF NO.9-2,P/# 719288 -92603.)

N:Old ←Yes/No→ New. Q:Old ←No/Yes→ New. R:Old ←Yes/Yes→ New. S:Old ←No/No→ New. W:Add. Z:Discontinued. F:Interchangeable by set. K:Q'ty Change

Copyright (C) YANMAR GLOBAL CS CO., LTD. All RightsReserved.

Fig.12. FUEL PIPE

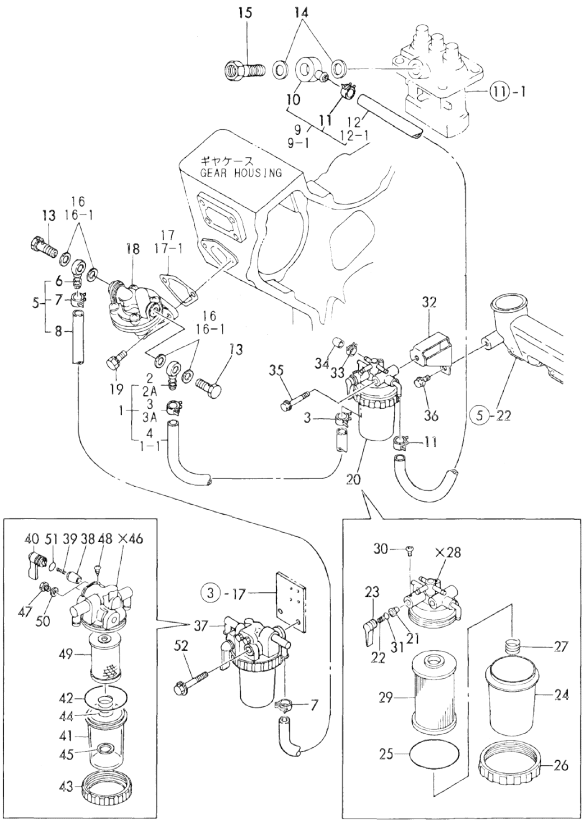

Remarks
(A) THIS PART IS ALSO SOLD BY GASKET SET(FIG 18.REF NO.9-2,P/# 719288 -92603.)

(A)=3TN66E-GB2
(B)=3TNA72E-GB2
(C)=3TN84E-GB2
(D)=4TN84E-GB2
(E)=
(F)=

No.	Lev.	Parts No.	Description	Q'ty (A)	(B)	(C)	(D)	(E)	(F)	I	R
1	1	119260-59020	PIPE ASSY, D12XL400	1							
1-1	1	121024-59090	PIPE, FUEL D12X450	1						N	
	(A=E/# 17976)										
2	2	104264-59030	JOINT, PIPE 8	1						Z	
	(A=E/# 17976)										
2A	1	104264-59030	JOINT, PIPE 8	1						W	
	(A=E/# 17976)										
3	2	124766-59050	CLIP, HOSE 12	2						Z	
	(A=E/# 17976)										
3A	1	124766-59050	CLIP, HOSE 12	2						W	
	(A=E/# 17976)										
4	2	121236-59080	PIPE, FUEL D12X400	1						Z	
	(A=E/# 17976)										
5	1	119260-59020	PIPE ASSY, D12XL400	1							
6	2	104264-59030	JOINT, PIPE 8	1							
7	2	124766-59050	CLIP, HOSE 12	2							
8	2	121236-59080	PIPE, FUEL D12X400	1							
9	1	124767-59031	PIPE ASSY, FUEL	1							
9-1	1	119225-59030	PIPE ASSY, FUEL	1						N	
	(A=EXXX)										
10	2	101304-59020	JOINT, PIPE 12	1							
11	2	124766-59050	CLIP, HOSE 12	2							
12	2	124767-59080	PIPE, FUEL	1							
12-1	2	119225-59560	PIPE, FUEL	1						N	
	(A=EXXX)										
13	1	105582-59150	BOLT, PIPE JOINT	2							
14	1	104200-59170	GASKET, 12	2							A
15	1	119650-59200	BOLT, PIPE JOINT M12	1							
16	1	23414-080012	GASKET, 8X1.0	4							
16-1	1	22190-080002	WASHER, SEAL 6	4						N	
	(A=EXXX)										
17	1	121520-01850	GASKET	1							
17-1	1	121520-01851	GASKET	1						N	A
	(A=E/# 23060)										
18	1	119600-52021	PUMP ASSY, FUEL FEED	1							
19	1	26014-060202	BOLT, M6X 20	2							
20	1	119632-55620	FILTER ASSY, FUEL	1							
21	2	104200-55321	VALVE, TAPER	1							
22	2	104200-55330	SPRING, VALVE	1							
23	2	119810-55340	LEVER	1							
24	2	121254-55510	COVER	1							
25	2	102103-55520	O-RING	1							A
26	2	110250-55610	RING, RETAINING	1							
27	2	121250-55620	SPRING	1							
29	2	124550-55700	FILTER, FUEL L=90	1							
30	2	104200-55750	SCREW, M4	1							
31	2	24311-240100	O-RING, 1AP10A	1							A
32	1	119249-55900	BRACKET, FILTER	1							
33	1	124066-59100	CLIP, HOSE 8	1							
34	1	129150-59580	CAP	1							
35	1	26014-080702	BOLT, M8X 70	1							

N:Old ←Yes/No→ New. Q:Old ←No/Yes→ New. R:Old ←Yes/Yes→ New. S:Old ←No/No→ New. W:Add. Z:Discontinued. F:Interchangeable by set. K:Q'ty Change

++ CONTINUE ++

Copyright (C) YANMAR GLOBAL CS CO., LTD. All RightsReserved.

Fig.12. FUEL PIPE

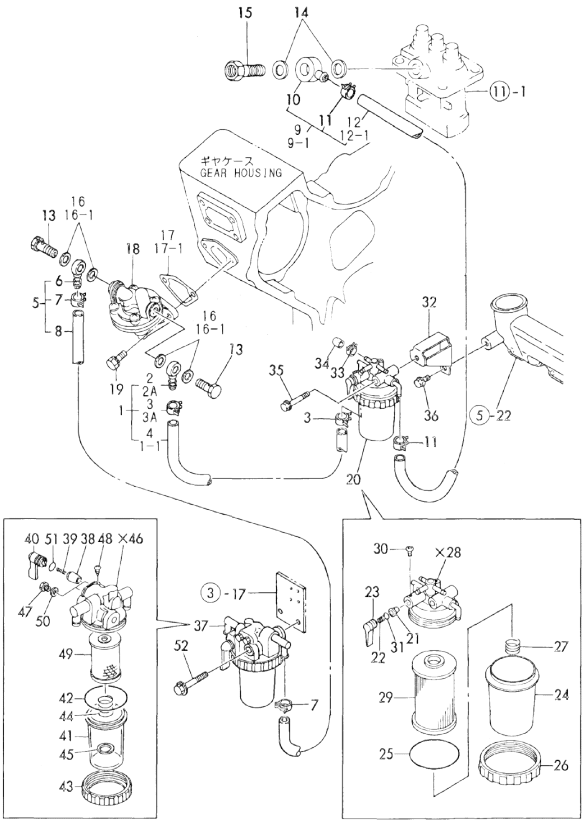

Remarks
(A) THIS PART IS ALSO SOLD BY GASKET SET(FIG 18.REF NO.9-2,P/# 719288 -92603.)

(A)=3TN66E-GB2
(B)=3TNA72E-GB2
(C)=3TN84E-GB2
(D)=4TN84E-GB2
(E)=
(F)=

No.	Lev.	Parts No.	Description	Q'ty (A)	(B)	(C)	(D)	(E)	(F)	I	R
36	1	26106-080162	BOLT, M8X 16 PLATED	1							
37	1	129335-55700	SEPARATOR ASSY,WATER	1							
38	2	104200-55321	VALVE, TAPER	1							
39	2	104200-55330	SPRING, VALVE	1							
40	2	104200-55341	HANDLE	1							
41	2	124064-55510	COVER	1							
42	2	102103-55520	O-RING	1							A
43	2	110250-55610	RING, RETAINING	1							
44	2	121257-55720	SPRING	1							
45	2	121257-55731	FLOAT	1							
47	2	101720-55750	PLUG, 6	2							
48	2	104200-55750	SCREW, M4	1							
49	2	171081-55910	SCREEN	1							
50	2	23418-060000	GASKET, 6X1.0	2							
51	2	24311-240100	O-RING, 1AP10A	1							A
52	1	26014-080702	BOLT, M8X 70	1							

N:Old ←Yes/No→ New. Q:Old ←No/Yes→ New. R:Old ←Yes/Yes→ New. S:Old ←No/No→ New. W:Add. Z:Discontinued. F:Interchangeable by set. K:Q'ty Change

Copyright (C) YANMAR GLOBAL CS CO., LTD. All RightsReserved.

Fig.13. GOVERNOR

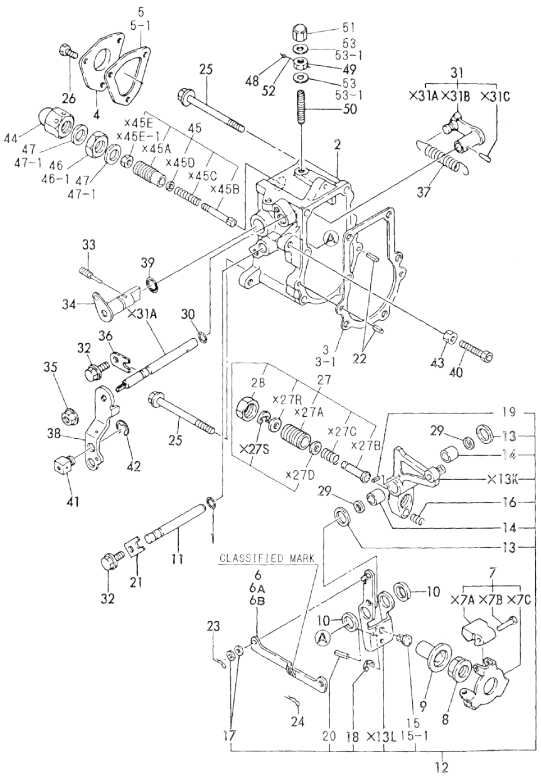

(A)=3TN66E-GB2
(B)=3TNA72E-GB2
(C)=3TN84E-GB2
(D)=4TN84E-GB2
(E)=
(F)=

No.	Lev.	Parts No.	Description	Q'ty (A)	(B)	(C)	(D)	(E)	(F)	I	R
1	1	129155-51280	O-RING, S6	1							A
2	1	119660-61013	CASE, GOVERNOR	1							
3	1	119660-61051	GASKET	1							
3-1	1	119660-61052	GASKET	1						N	A
	(A=E/# 23060)										
4	1	119660-61060	COVER, GOVERNOR CASE	1							
5	1	119660-61070	GASKET	1							
5-1	1	119660-61071	GASKET	1						N	A
	(A=E/# 23060)										
6	1	119660-61121	LINK, NO MARK	1							1
6A	1	119660-61140	LINK, MARK :2	1						W	1
	(A=FROM 1ST)										
6B	1	119660-61150	LINK, MARK :3	1						W	1
	(A=FROM 1ST)										
7	1	119600-61200	WEIGHT ASSY,GOVERNOR	1							
8	1	119660-61300	NUT	1							
9	1	119660-61341	SLEEVE	1							
10	1	129155-61480	SPACER ASSY	2							
11	1	119660-61491	SHAFT	1							
12	1	119600-61500	LEVER ASSY, GOVERNOR	1							
13	2	174307-51700	SHIM SET	2							
14	2	129155-61530	BUSH	2							
15	2	119600-61540	SHIFTER	1							
15-1	2	119600-61541	SHIFTER	1						N	
	(A=E/# 48119)										
16	2	119600-61650	SPRING, STARTING	1							
17	2	22117-040000	WASHER, 4	2							
18	2	22272-000040	RING, E- 4	1							
19	2	22351-020004	PIN, SPRING 2.0X 4	1						Z	
	(A=E/# 48119)										
20	2	22351-030014	PIN, SPRING 3.0X14	1							
21	1	119660-61901	RETAINER, SHAFT	1							
22	1	22351-040010	PIN, SPRING 4.0X10	2							
23	1	22360-040000	PIN, SNAP 4	1							A
24	1	22360-060000	PIN, SNAP 6	1							A
25	1	26106-060702	BOLT, M6X 70 PLATED	6							
26	1	26116-050102	BOLT, M5X 10 PLATED	3							
27	1	119260-66720	ANGLEICH ASSY	1							
28	2	129155-61590	NUT, LOCK	1							
29	1	119660-61460	SHIM SET	1							
30	1	24341-000070	O-RING, 1AS7.0	1							A
31	1	119621-66091	SHAFT ASSY	1							
32	1	26106-060102	BOLT, M6X 10 PLATED	2							
33	1	124250-03640	SCREW	1							
34	1	119643-66560	LEVER, STOP	1							
35	1	194990-22050	NUT, M8	1							
36	1	119600-61900	RETAINER, SHAFT	1							
37	1	119260-66010	SPRING, REGULATOR	1							
38	1	119621-66051	LEVER, REGULATOR	1							
39	1	24311-240100	O-RING, 1AP10A	1							A
40	1	26116-060304	BOLT, M6X 30 PLATED	1							

Remarks
(1) SELECTIVE PARTS:CERTAIN THE CLASSIFICATION MARK, THEN PLACE YOUR ORDER. (ILLUSTRATION)
(A) THIS PART IS ALSO SOLD BY GASKET SET(FIG 18.REF NO.9-2,P/# 719288 -92603.)

N:Old ←Yes/No→ New. Q:Old ←No/Yes→ New. R:Old ←Yes/Yes→ New. S:Old ←No/No→ New. W:Add. Z:Discontinued. F:Interchangeable by set. K:Q'ty Change

++ CONTINUE ++

Copyright (C) YANMAR GLOBAL CS CO., LTD. All RightsReserved.

Fig.13. GOVERNOR

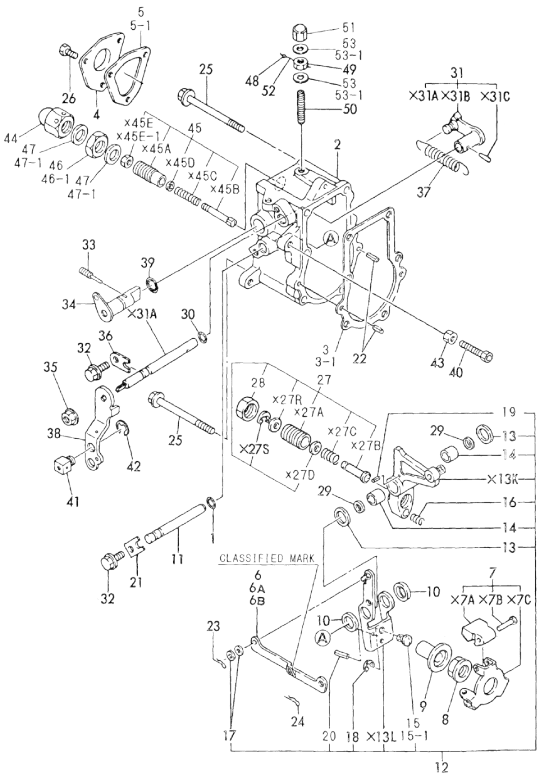

Remarks
(1) SELECTIVE PARTS:CERTAIN THE CLASSIFICATION MARK, THEN PLACE YOUR ORDER. (ILLUSTRATION)
(A) THIS PART IS ALSO SOLD BY GASKET SET(FIG 18.REF NO.9-2,P/# 719288 -92603.)

(A)=3TN66E-GB2
(B)=3TNA72E-GB2
(C)=3TN84E-GB2
(D)=4TN84E-GB2
(E)=
(F)=

No.	Lev.	Parts No.	Description	Q'ty (A)	(B)	(C)	(D)	(E)	(F)	I	R
41	1	124756-67510	RETAINER	1							
42	1	22272-000070	RING, E- 7	1							
43	1	26756-060002	NUT, LOCK M6	1							
44	1	129100-61930	NUT, CAP	1							
45	1	119260-66540	LIMITER ASSY, FUEL	1							
45E-1	2	26756-050002	NUT, LOCK M5	2						K	
	(A=EXXX)										
46	1	124772-66750	NUT, LOCK M12	1							
46-1	1	26776-120002	NUT, LOCK M12	1						R	
	(A=E/# 43727)										
47	1	43400-500450	SEAL WASHER 12S	2							
47-1	1	22190-120002	WASHER, SEAL 12	2						R	A
	(A=E/# 39502)										
48	1	135210-61090	LEAD	1						Z	
	(A=EXXX)										
49	1	124550-66370	NUT, M6	1							
50	1	121575-66830	SCREW	1							
51	1	119600-66840	NUT, CAP	1							
52	1	22451-060000	WIRE, 0.6	1						Z	
	(A=EXXX)										
53	1	43400-500400	SEAL WASHER 6	2							
53-1	1	22190-060003	SEAL WASER 6	2						R	A
	(A=E/# 39502)										

N:Old ←Yes/No→ New. Q:Old ←No/Yes→ New. R:Old ←Yes/Yes→ New. S:Old ←No/No→ New. W:Add. Z:Discontinued. F:Interchangeable by set. K:Q'ty Change

Copyright (C) YANMAR GLOBAL CS CO., LTD. All RightsReserved.

Fig.14. ENGINE STOP DEVICE

(A)=3TN66E-GB2
(B)=3TNA72E-GB2
(C)=3TN84E-GB2
(D)=4TN84E-GB2
(E)=
(F)=

No.	Lev.	Parts No.	Description	Q'ty (A)	(B)	(C)	(D)	(E)	(F)	I	R
1	1	119245-66400	BUSH	2							
2	1	119643-66532	LINK, SOLENOID	1							
3	1	119241-66541	BRACKET, SOLENOID	1							
4	1	129155-66800	SOLENOID	1							
5	1	22137-040000	WASHER, 4	4							
6	1	22360-040000	PIN, SNAP 4	2							
7	1	26106-060102	BOLT, M6X 10 PLATED	2							
8	1	26106-080182	BOLT, M8X 18 PLATED	2							

N:Old ←Yes/No→ New. Q:Old ←No/Yes→ New. R:Old ←Yes/Yes→ New. S:Old ←No/No→ New. W:Add. Z:Discontinued. F:Interchangeable by set. K:Q'ty Change

Copyright (C) YANMAR GLOBAL CS CO., LTD. All RightsReserved.

Fig.15. STARTING MOTOR

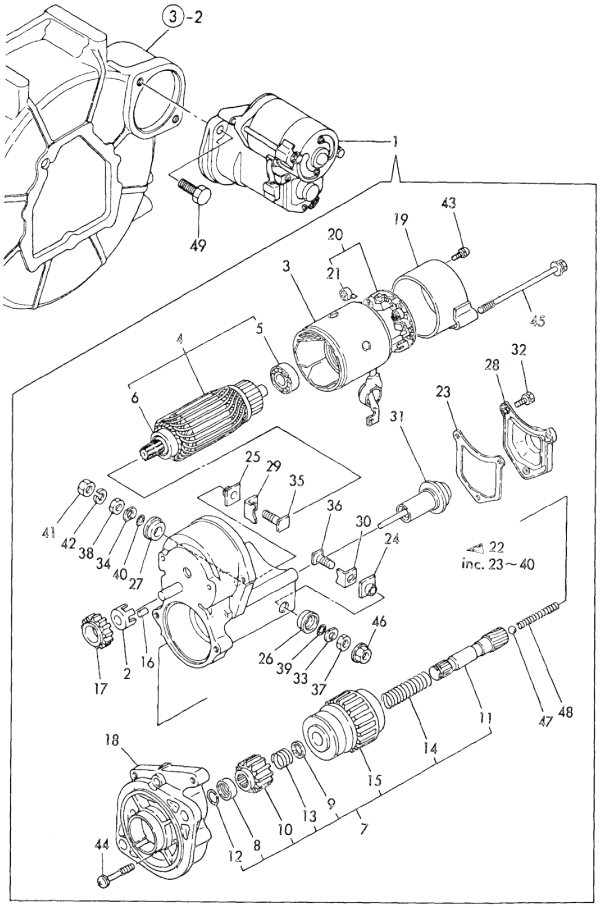

(A)=3TN66E-GB2
(B)=3TNA72E-GB2
(C)=3TN84E-GB2
(D)=4TN84E-GB2
(E)=
(F)=

No.	Lev.	Parts No.	Description	Q'ty (A)	(B)	(C)	(D)	(E)	(F)	I	R
1	1	119620-77011	STARTER	1							
2	2	X0280630011	RETAINER	1							
3	2	X0281003751	YOKE ASSY	1							
4	2	X0282001531	ARMATURE ASSY	1							
5	3	X9491001360	BEARING	1							
6	3	X9491001860	BEARING, BALL	1							
7	2	X0283005050	CLUTCH, STARTER	1							
8	3	X0280210230	NUT	1							
9	3	X0283270140	RETAINER	1							
10	3	X0283715030	PINION, STARTER	1							
11	3	X0283810040	SHAFT	1							
12	3	X9490721080	RING	1							
13	3	X9491703371	SPRING, COIL	1							
14	3	X9491704260	SPRING	1							
15	3	121120-77930	CASE ASSY, STARTER	1							
16	2	X0283060061	ROLLER	5							
17	2	X0283711420	PINION	1							
18	2	X0284004910	HOUSING	1							
19	2	X0285040631	FRAME ASSY	1							
20	2	X0285100460	HOLDER ASSY, BRUSH	1							
21	3	X9491730461	SPRING	4							
22	2	X0534006460	SWITCH	1							
23	3	X0534040320	GASKET	1							
24	3	X0534490120	BUSH	1							
25	3	X0534490120	BUSH	1							
26	3	X0534490230	BUSH	1							
27	3	X0534490230	BUSH	1							
28	3	X0535050620	COVER	1							
29	3	X0535130241	PLATE	1							
30	3	X0535130320	PLATE	1							
31	3	X0536600401	PLUNGER	1							
32	3	X9151005141	BOLT	3							
33	3	X9490170900	WASHER	1							
34	3	X9490170900	WASHER	1							
35	3	X9490441303	BOLT	1							
36	3	X9490441312	BOLT	1							
37	3	X9490502820	NUT	1							
38	3	X9490502820	NUT	1							
39	3	X9491402100	O-RING	1							
40	3	X9491402100	O-RING	1							
41	2	X9019008651	NUT	1							
42	2	X9025808001	WASHER	1							
43	2	X9490071810	SCREW	2							
44	2	X9490071970	SCREW	2							
45	2	X9490423330	BOLT	2							
46	2	X9490561370	NUT	1							
47	2	X9491200240	BALL	1							
48	2	X9491703380	SPRING	1							
49	1	26116-120252	BOLT, M12X 25 PLATED	2							

N:Old ←Yes/No→ New. Q:Old ←No/Yes→ New. R:Old ←Yes/Yes→ New. S:Old ←No/No→ New. W:Add. Z:Discontinued. F:Interchangeable by set. K:Q'ty Change

Copyright (C) YANMAR GLOBAL CS CO., LTD. All RightsReserved.

Fig.16. GENERATOR

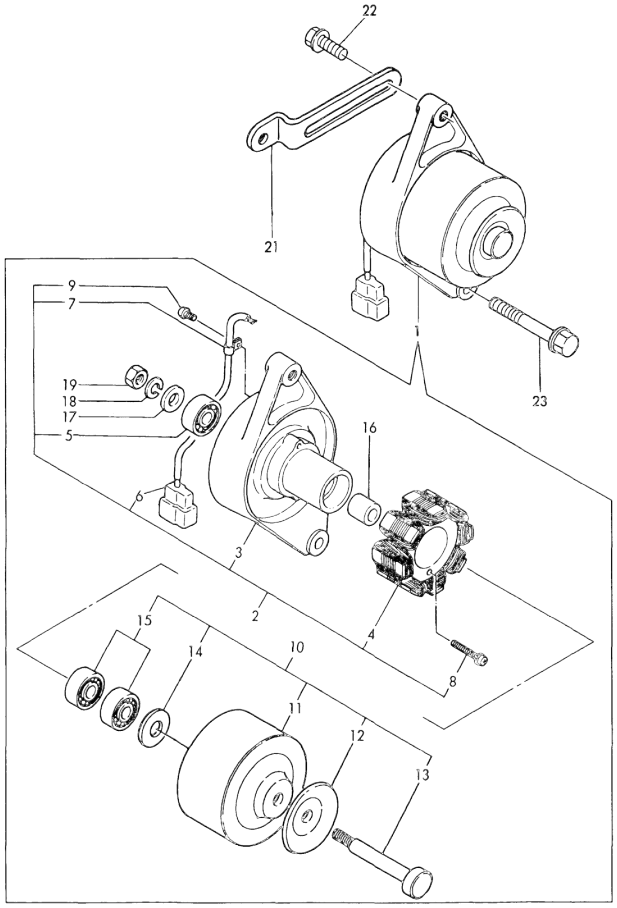

(A)=3TN66E-GB2
(B)=3TNA72E-GB2
(C)=3TN84E-GB2
(D)=4TN84E-GB2
(E)=
(F)=

No.	Lev.	Parts No.	Description	Q'ty (A)	(B)	(C)	(D)	(E)	(F)	I	R
1	1	171301-77201	DYNAMO ASSY, 15A	1							
2	2	XM08137	PLATE ASSY	1							
3	3	XM08138	PLATE	1							
4	3	XM08180	STATOR SET	1							
5	3	XM27436	BEARING, BALL	1							
6	3	XM17878	COUPLER	1							
7	3	XM36410	CLAMP	1							
8	3	26022-040252	SCREW, M4X25	2							
9	3	XYSPS4008	SCREW	1							
10	2	XM82184	FLYWHEEL ASSY	1							
11	3	XM82110	FLYWHEEL	1							
12	3	XM72174	PULLEY	1							
13	3	XM72664	SHAFT	1							
14	3	XM37336	WASHER	1							
15	3	XM27436	BEARING, BALL	2							
16	2	106383-44720	SPACER	1							
17	2	106383-44730	WASHER	1							
18	2	22212-100000	SPRING WASHER 10	1							
19	2	26716-100002	NUT, M10	1							
21	1	121450-77330	ADJUSTER	1							
22	1	26014-080252	BOLT, M8X 25	1							
23	1	26106-100402	BOLT, M10X 40 PLATED	1							

N:Old ◄Yes/No► New. Q:Old ◄No/Yes► New. R:Old ◄Yes/Yes► New. S:Old ◄No/No► New. W:Add. Z:Discontinued. F:Interchangeable by set. K:Q'ty Change

Copyright (C) YANMAR GLOBAL CS CO., LTD. All RightsReserved.

Fig.17. ELECTRIC PART

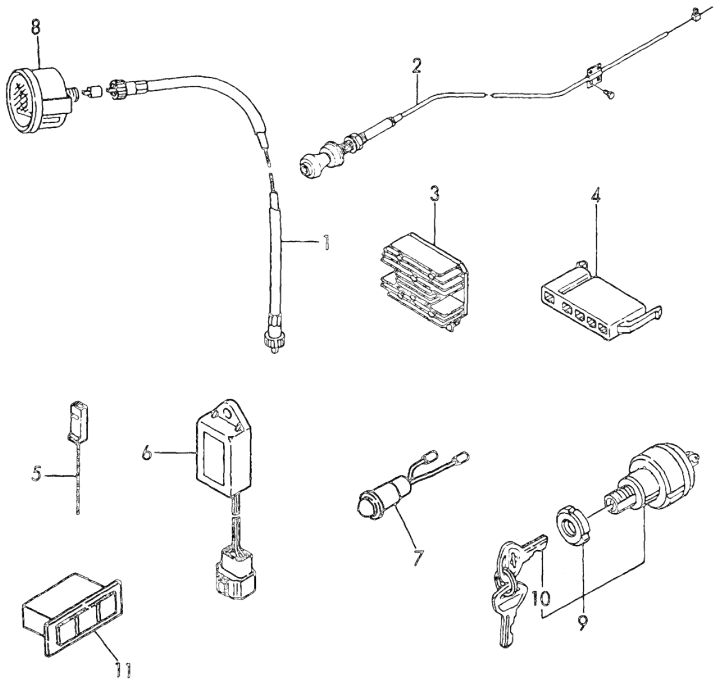

(A)=3TN66E-GB2
(B)=3TNA72E-GB2
(C)=3TN84E-GB2
(D)=4TN84E-GB2
(E)=
(F)=

No.	Lev.	Parts No.	Description	Q'ty (A)	(B)	(C)	(D)	(E)	(F)	I	R
1	1	194145-56901	CABLE ASSY, METER	1							
2	1	170022-67100	CABLE, PUSH-PULL	1							
3	1	119660-77710	LIMITER, CURRENT 15A	1							
4	1	171301-77720	COUPLER	1							
5	1	119643-77900	CONNECTOR, STARTER	1							
6	1	128300-77920	TIMER	1							
7	1	124732-77970	LAMP, PILOT	1							
8	1	171080-91100	TACHOMETER	1							
9	1	121400-91251	SWITCH, STARTER	1							
10	2	121400-91271	KEY, SWITCH	2							
11	1	170038-91310	LAMP	1							

N:Old ←Yes/No→ New. Q:Old ←No/Yes→ New. R:Old ←Yes/Yes→ New. S:Old ←No/No→ New. W:Add. Z:Discontinued. F:Interchangeable by set. K:Q'ty Change

Copyright (C) YANMAR GLOBAL CS CO., LTD. All RightsReserved.

Fig.18. GASKET SET(OPTIONAL) & TOOL

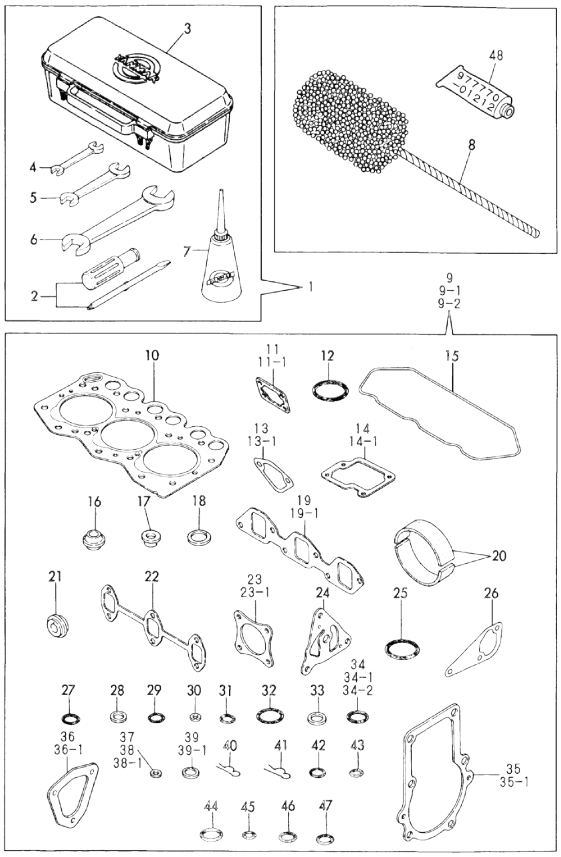

No.	Lev.	Parts No.	Description	Q'ty (A)	(B)	(C)	(D)	(E)	(F)	I	R
			(A)=3TN66E-GB2 (B)=3TNA72E-GB2 (C)=3TN84E-GB2			(D)=4TN84E-GB2 (E)= (F)=					
1	1	171001-93100	BOX, TOOL	1							
2	2	104200-92350	DRIVER, SCREW	1							
3	2	104200-92600	BOX, TOOL	1							
4	2	28110-100120	SPANNER, 10X12	1							
5	2	28110-140170	SPANNER, 14X17	1							
6	2	28110-190220	SPANNER, 19X22	1							
7	2	28210-000140	OILER	1							
8	1	129400-92400	HONE	1							1
9	1	719288-92600	GASKET SET	1							1
9-1	1	719288-92602	GASKET SET	1						N	1
	(A=E/# 23060)										
9-2	1	719288-92603	GASKET SET	1						N	1
	(A=E/# 32488)										
10	2	119225-01340	GASKET, HEAD	1							
11	2	119660-01561	GASKET	1							
11-1	2	119660-01562	GASKET	1						R	
	(A=E/# 23060)										
12	2	24311-000320	O-RING, 1AP32.0	1							
13	2	121520-01850	GASKET	1							
13-1	2	121520-01851	GASKET	1						R	
	(A=E/# 23060)										
14	2	119260-03030	GASKET	1							
14-1	2	119260-03031	GASKET	1						N	
	(A=E/# 25073)										
15	2	119260-11310	GASKET, BONNET	1							
16	2	119260-11340	SEAL, VALVE STEM	6							
17	2	119600-11450	PROTECTOR, NOZZLE	3							
18	2	119600-11460	GASKET, NOZZLE	6							
19	2	119260-12110	GASKET, MANIFOLD	1							
19-1	2	119260-12111	GASKET, MANIFOLD	1						N	
	(A=E/# 25073)										
20	2	119640-12580	SEAT, RUBBER	2							
21	2	119860-12560	WASHER, SEAL	1							
22	2	119260-13110	GASKET	1							
23	2	121000-13200	GASKET, SILENCER	2							
23-1	2	121000-13201	GASKET, SILENCER	2						N	
	(A=E/# 32488)										
24	2	119660-32020	GASKET, PUMP	1							
25	2	124450-35110	O-RING	1						Z	
	(A=EXXX)										
26	2	119260-42020	GASKET, WATER PUMP	1							
27	2	119225-42320	O-RING	1							
28	2	124465-44950	GASKET, 16	1							
29	2	129155-51280	O-RING, S6	1							
30	2	119620-51350	GASKET	3							
31	2	119620-51370	O-RING	3							
32	2	102103-55520	O-RING	2							
33	2	104200-59170	GASKET, 12	2							
34	2	129155-61830	O-RING, S10	3							
34-1	2	129155-51580	O-RING	3						N	
	(A=E/# 35491)										

Remarks
(1) OPTIONAL PARTS.

N:Old $\frac{\text{Yes}}{\text{No}}$ New. Q:Old $\frac{\text{No}}{\text{Yes}}$ New. R:Old $\frac{\text{Yes}}{\text{Yes}}$ New. S:Old $\frac{\text{No}}{\text{No}}$ New. W:Add. Z:Discontinued. F:Interchangeable by set. K:Q'ty Change

++ CONTINUE ++

Copyright (C) YANMAR GLOBAL CS CO., LTD. All RightsReserved.

Fig.18. GASKET SET(OPTIONAL) & TOOL

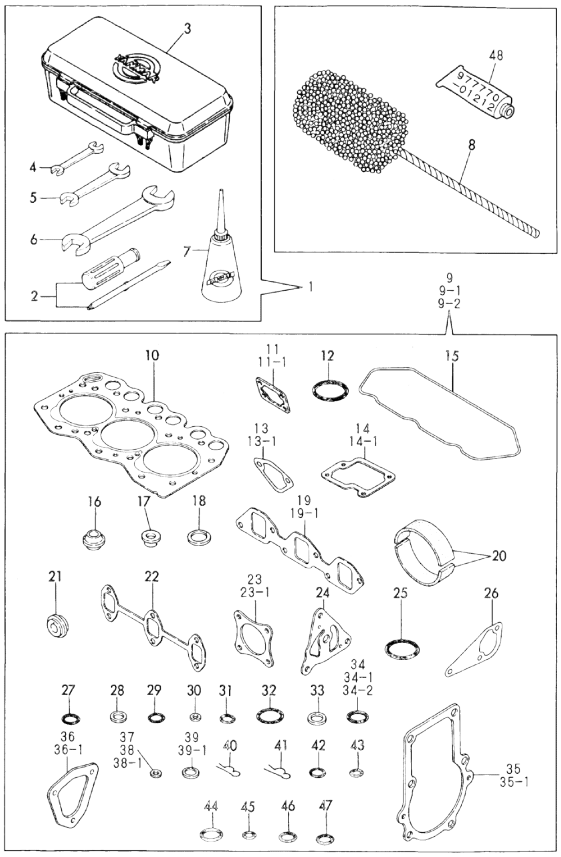

(A)=3TN66E-GB2
(B)=3TNA72E-GB2
(C)=3TN84E-GB2
(D)=4TN84E-GB2
(E)=
(F)=

No.	Lev.	Parts No.	Description	Q'ty (A)	(B)	(C)	(D)	(E)	(F)	I	R
34-2	2	129155-61830	O-RING, S10	3						N	
	(A=E/# 48767)										
35	2	119660-61051	GASKET	1							
35-1	2	119660-61052	GASKET	1						N	
	(A=E/# 23060)										
36	2	119660-61070	GASKET	1							
36-1	2	119660-61071	GASKET	1						N	
	(A=E/# 23060)										
37	2	43400-500390	SEAL WASHER 6S	1							
38	2	43400-500400	SEAL WASHER 6	2							
38-1	2	22190-060003	SEAL WASER 6	2						R	
	(A=E/# 39502)										
39	2	43400-500450	SEAL WASHER 12S	2							
39-1	2	22190-120002	WASHER, SEAL 12	2						R	
	(A=E/# 39502)										
40	2	22360-040000	PIN, SNAP 4	1							
41	2	22360-060000	PIN, SNAP 6	1							
42	2	24311-000120	O-RING, 1AP12.0	5							
43	2	24311-000180	O-RING, 1AP18.0	1							
44	2	24311-000260	O-RING, 1AP26.0	1							
45	2	24311-240100	O-RING, 1AP10A	3							
46	2	24321-000350	O-RING, 1AG35.0	1							
47	2	24341-000070	O-RING, 1AS7.0	1							
48	2	977770-01212	GASKET, LIQUID	1							1

Remarks
(1) OPTIONAL PARTS.

N:Old $\xleftarrow[\text{No}]{\text{Yes}}$ New. Q:Old $\xleftarrow[\text{Yes}]{\text{No}}$ New, R:Old $\xleftarrow[\text{Yes}]{\text{Yes}}$ New. S:Old $\xleftarrow[\text{No}]{\text{No}}$ New. W:Add. Z:Discontinued. F:Interchangeable by set. K:Q'ty Change

Copyright (C) YANMAR GLOBAL CS CO., LTD. All RightsReserved.

Fig.19. CYLINDER BLOCK

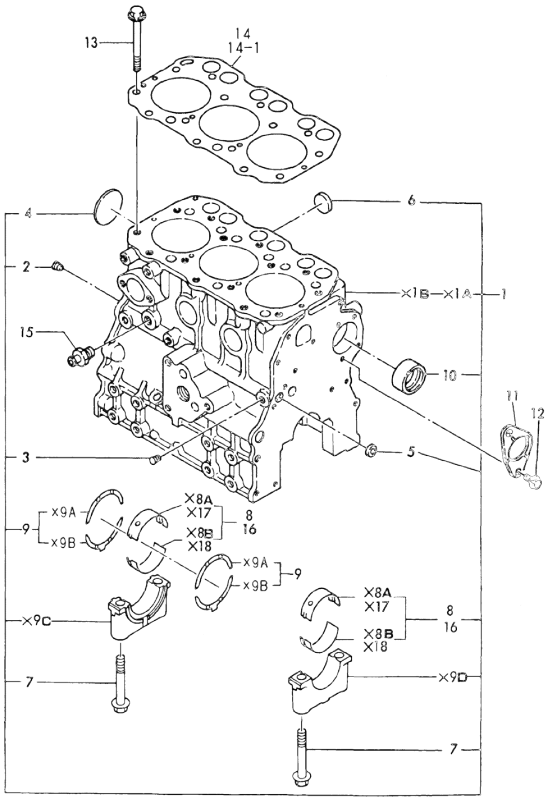

(A)=3TN66E-GB2
(B)=3TNA72E-GB2
(C)=3TN84E-GB2
(D)=4TN84E-GB2
(E)=
(F)=

No.	Lev.	Parts No.	Description	Q'ty (A)	(B)	(C)	(D)	(E)	(F)	I	R
1	1	719610-01560	BLOCK ASSY, CYLINDER		1						
2	3	119600-01050	PLUG, PT1/4		1						
3	3	23871-010000	PLUG, R01		1						
4	3	27231-450000	PLUG 45		1						
5	3	27241-120000	PLUG, 12		1						
6	3	27241-300000	PLUG 30		6						
7	2	119620-02020	BOLT, METAL CAP		8						
8	2	719620-02800	BEARING, MAIN		4						
9	2	719620-02930	BEARING, THRUST		2						
10	2	119620-02410	BUSH, CAMSHAFT		1						
11	1	119620-02450	BEARING, THRUST		1						
12	1	26106-060122	BOLT, M6X 12 PLATED		2						
13	1	119620-01200	BOLT, HEAD		14						
14	1	119610-01340	GASKET, HEAD		1						
14-1	1	119620-01342	GASKET, HEAD		1					R	A
		(B=E/# 81829)									
15	1	121550-49111	JOINT, PT1/4		1						
16	1	719620-02870	BEARING, 0.25 US		4						1

Remarks
(1) UNDER-SIZE(U.S.=0.25) PART.
(A) THIS PART IS ALSO SOLD BY GASKET SET(FIG 36.REF NO.9-2,P/# 719649 -92611.)

N:Old ←Yes/No→ New. Q:Old ←No/Yes→ New. R:Old ←Yes/Yes→ New. S:Old ←No/No→ New. W:Add. Z:Discontinued. F:Interchangeable by set. K:Q'ty Change

Copyright (C) YANMAR GLOBAL CS CO., LTD. All RightsReserved.

Fig.20. GEAR HOUSING

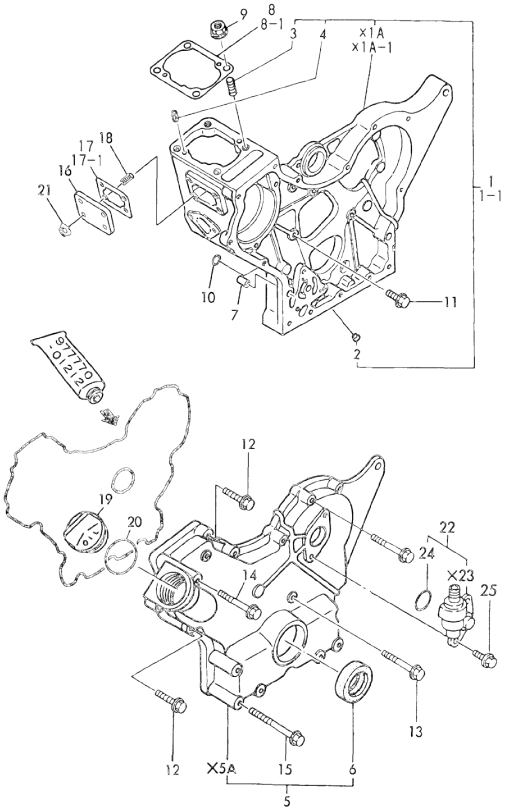

(A)=3TN66E-GB2
(B)=3TNA72E-GB2
(C)=3TN84E-GB2
(D)=4TN84E-GB2
(E)=
(F)=

No.	Lev.	Parts No.	Description	Q'ty (A)	(B)	(C)	(D)	(E)	(F)	I	R
1	1	119660-01490	CASE ASSY, GEAR		1						
1-1	1	119610-01490	CASE ASSY, GEAR		1					N	
		(B=EXXX)									
2	2	119660-01510	PLUG, 10X14		1						
3	2	121450-01560	STUD, M8X22		4						
4	2	22351-040010	PIN, SPRING 4.0X10		2						
5	1	119610-01590	COVER ASSY,GEAR CASE		1					W	
		(B=E/# 40609)									
6	2	119620-01800	SEAL, OIL		1						
7	1	119660-01911	PIPE, KNOCK		4						
8	1	119620-01950	SHIM SET, ADJUSTING		1						
8-1	1	119623-01950	SHIM SET, ADJUSTING		1					N	
		(B=E/# 98897)									
9	1	194990-22050	NUT, M8		4						
10	1	24311-000120	O-RING, 1AP12.0		2						
11	1	26106-060162	BOLT, M6X 16 PLATED		7						
12	1	26106-060302	BOLT, M6X 30 PLATED		8						
13	1	26106-060602	BOLT, M6X 60 PLATED		1						
14	1	26106-060602	BOLT, M6X 60 PLATED		3						
15	1	26106-060802	BOLT, M6X 80 PLATED		6						
16	1	119660-01551	COVER		1						
17	1	119660-01561	GASKET		1						
17-1	1	119660-01562	GASKET		1					N	A
		(B=E/# 37754)									
18	1	119660-01570	STUD, M6X12		4						
19	1	124160-01751	COVER, FILLER		1						
20	1	24311-000320	O-RING, 1AP32.0		1						A
21	1	26366-060002	NUT, M6		4						
22	1	129150-91400	GEAR		1						
24	2	24341-000240	O-RING, 1AS24.0		1						
25	1	26106-060162	BOLT, M6X 16 PLATED		2						

Remarks
(A) THIS PART IS ALSO SOLD BY GASKET SET(FIG 36.REF NO.9-2,P/# 719649 -92611.)

N:Old ←Yes/No→ New. Q:Old ←No/Yes→ New. R:Old ←Yes/Yes→ New. S:Old ←No/No→ New. W:Add. Z:Discontinued. F:Interchangeable by set. K:Q'ty Change

Copyright (C) YANMAR GLOBAL CS CO., LTD. All RightsReserved.

Fig.21. LUB.OIL SUMP

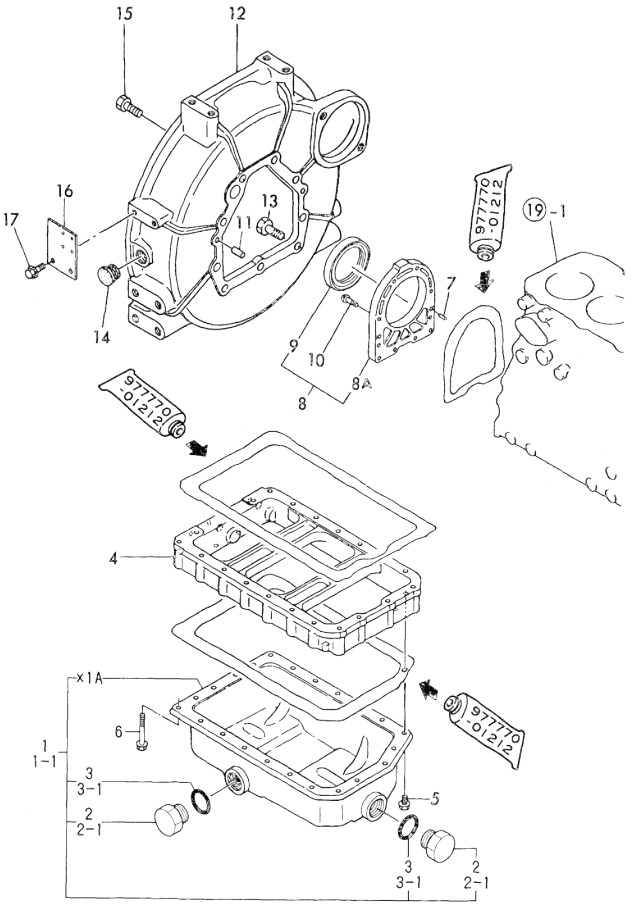

(A)=3TN66E-GB2
(B)=3TNA72E-GB2
(C)=3TN84E-GB2
(D)=4TN84E-GB2
(E)=
(F)=

No.	Lev.	Parts No.	Description	Q'ty (A)	(B)	(C)	(D)	(E)	(F)	I	R
1	1	719600-01541	SUMP ASSY, OIL		1						
1-1	1	119600-01770	SUMP ASSY, OIL		1					N	
		(B=E/# 40609)									
2	2	171301-01640	PLUG, 22		1						
2-1	2	171301-01640	PLUG, 22		2					K	
		(B=E/# B0531)									
3	2	24341-000240	O-RING, 1AS24.0		1						
3-1	2	24341-000250	O-RING, 1AS25.0		2					S	
		(B=E/# B0531)									
4	1	119600-01722	SPACER, OIL SUMP		1						
5	1	26106-060122	BOLT, M6X 12 PLATED		3						
6	1	26106-060452	BOLT, M6X 45 PLATED		20						
7	1	119620-01620	PIN, M6X10		2						
8	1	119660-01640	CASE ASSY, OIL SEAL		1					W	
		(B=E/# 40609)									
8A	2	119660-01651	CASE, OIL SEAL		1						
9	2	124085-02220	SEAL, OIL		1						
10	1	26106-060222	BOLT, M6X 22 PLATED		10						
11	1	129100-01580	PIN, M8X16		2						
12	1	119600-01600	HOUSING, FLYWHEEL		1						
13	1	121120-01620	BOLT, M10X28		3						
14	1	119620-01750	CAP		1						
15	1	26206-100252	BOLT, M10X 25 PLATED		6						
16	1	129111-67010	SUPPORT, WIRE		1						
17	1	26106-080162	BOLT, M8X 16 PLATED		2						

N:Old ←Yes/No→ New. Q:Old ←No/Yes→ New. R:Old ←Yes/Yes→ New. S:Old ←No/No→ New. W:Add. Z:Discontinued. F:Interchangeable by set. K:Q'ty Change

Copyright (C) YANMAR GLOBAL CS CO., LTD. All RightsReserved.

Fig.22. CYLINDER HEAD & BONNET

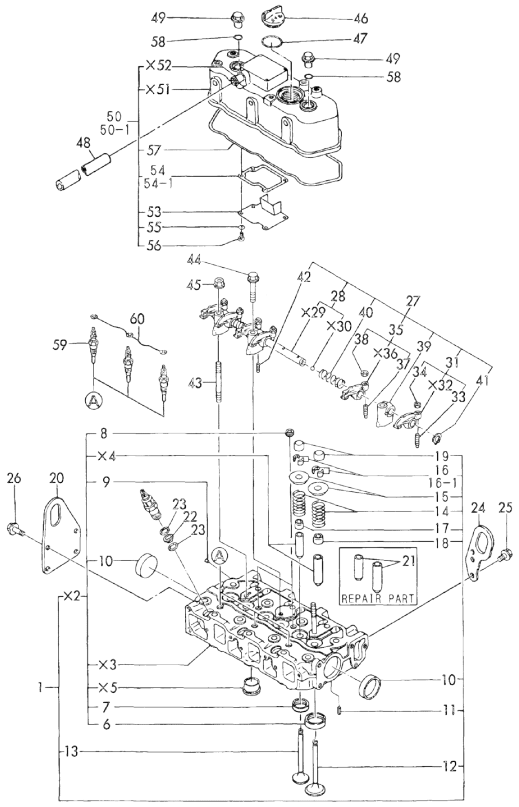

(A)=3TN66E-GB2
(B)=3TNA72E-GB2
(C)=3TN84E-GB2
(D)=4TN84E-GB2
(E)=
(F)=

No.	Lev.	Parts No.	Description	Q'ty (A)	(B)	(C)	(D)	(E)	(F)	I	R
1	1	719620-11701	HEAD ASSY, CYLINDER		1						
6	3	119620-11080	SEAT, INTAKE VALVE		3						
7	3	119620-11090	SEAT, EXHAUST VALVE		3						
8	3	121850-11860	PLUG, PT1/4		2						
9	3	27221-050080	PLUG, 5X 8		1						
10	3	27241-400000	PLUG, 40		2						
11	2	22351-060012	PIN, SPRING 6.0X12		2						
12	2	119620-11100	VALVE, INTAKE		3						
13	2	119620-11110	VALVE, EXHAUST		3						
14	2	119620-11120	SPRING, VALVE		6						
15	2	119620-11180	RETAINER, SPRING		6						
16	2	101158-11190	COTTER		6						
16-1	2	27310-070001	COTTER, 7		6					N	
		(B=EXXXXX)									
17	2	124950-11340	SEAL, VALVE STEM		3						
18	2	124160-11340	SEAL, VALVE STEM		3						
19	2	104211-11370	CAP, VALVE		6						
20	1	119632-07900	LIFTER		1						
21	1	119620-11801	GUIDE, VALVE		6						1
22	1	119600-11450	PROTECTOR, NOZZLE		3						
23	1	119600-11460	GASKET, NOZZLE		6						
24	1	119260-07900	LIFTER		1						
25	1	26106-080142	BOLT, M8X 14 PLATED		1						
26	1	26106-060122	BOLT, M6X 12 PLATED		4						
27	1	119620-11200	SUPPORT ASSY, ARM		1						
28	2	119620-11240	SHAFT ASSY, ROCKER		1						
31	2	719620-11650	ARM ASSY, ROCKER		3						
33	3	105010-11230	SCREW, VALVE ADJUST		3						
34	3	26756-060002	NUT, LOCK M6		3						
35	2	719620-11660	ARM ASSY, ROCKER		3						
37	3	105010-11230	SCREW, VALVE ADJUST		3						
38	3	26756-060002	NUT, LOCK M6		3						
39	2	119620-11260	SUPPORT, ROCKER ARM		3						
40	2	119620-11280	SPRING		2						
41	2	22242-000120	RING, 12		2						
42	2	26979-050162	SCREW, M5X16		1						
43	1	119620-11350	STUD		2						
44	1	26106-080452	BOLT, M8X 45 PLATED		1						
45	1	26366-080002	NUT, M8		2						
46	1	124160-01751	COVER, FILLER		1						
47	1	24311-000320	O-RING, 1AP32.0		1						
48	1	23065-120500	PIPE, 12X 500		1						
49	1	124160-11360	KNOB		2						
50	1	719620-11520	BONNET ASSY, HEAD		1						
50-1	1	119620-11330	BONNET ASSY, HEAD		1					N	
		(B=E/# 40609)									
53	2	119620-03020	PLATE, SHELTER		1						
54	2	119620-03030	GASKET		1						
54-1	2	119620-03031	GASKET		1					N	A
		(B=E/# 37754)									
55	2	22217-050000	WASHER, SPRING 5		4						

N:Old ←Yes/No→ New. Q:Old ←No/Yes→ New. R:Old ←Yes/Yes→ New. S:Old ←No/No→ New. W:Add. Z:Discontinued. F:Interchangeable by set. K:Q'ty Change

++ CONTINUE ++

Copyright (C) YANMAR GLOBAL CS CO., LTD. All RightsReserved.

Remarks
(1) REPAIR PART.
(A) THIS PART IS ALSO SOLD BY GASKET SET(FIG 36.REF NO.9-2,P/# 719649 -92611.)

Fig.22. CYLINDER HEAD & BONNET

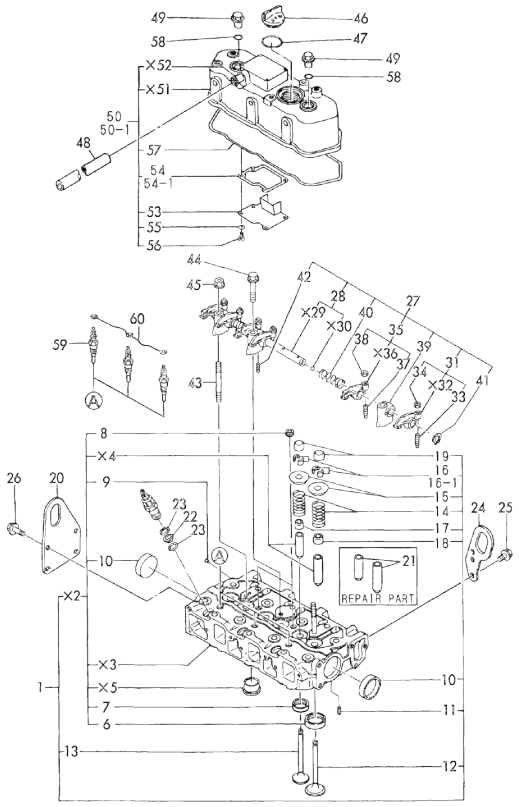

Remarks
(1) REPAIR PART.
(A) THIS PART IS ALSO SOLD BY GASKET SET(FIG 36.REF NO.9-2,P/# 719649 -92611.)

(A)=3TN66E-GB2
(B)=3TNA72E-GB2
(C)=3TN84E-GB2
(D)=4TN84E-GB2
(E)=
(F)=

No.	Lev.	Parts No.	Description	Q'ty (A)	(B)	(C)	(D)	(E)	(F)	I	R
56	2	26557-050102	SCREW, M5X10		4						
57	2	119620-11310	GASKET, BONNET		1						A
58	1	24311-000120	O-RING, 1AP12.0		2						
59	1	129795-77800	PLUG, GLOW		3						
60	1	119620-77820	CONNECTOR, GLOW PLUG		1						

N:Old ←Yes/No→ New. Q:Old ←No/Yes→ New. R:Old ←Yes/Yes→ New. S:Old ←No/No→ New. W:Add. Z:Discontinued. F:Interchangeable by set. K:Q'ty Change

Copyright (C) YANMAR GLOBAL CS CO., LTD. All RightsReserved.

Fig.23. SUCTION MANIFOLD & AIR CLEANER

(A)=3TN66E-GB2
(B)=3TNA72E-GB2
(C)=3TN84E-GB2
(D)=4TN84E-GB2
(E)=
(F)=

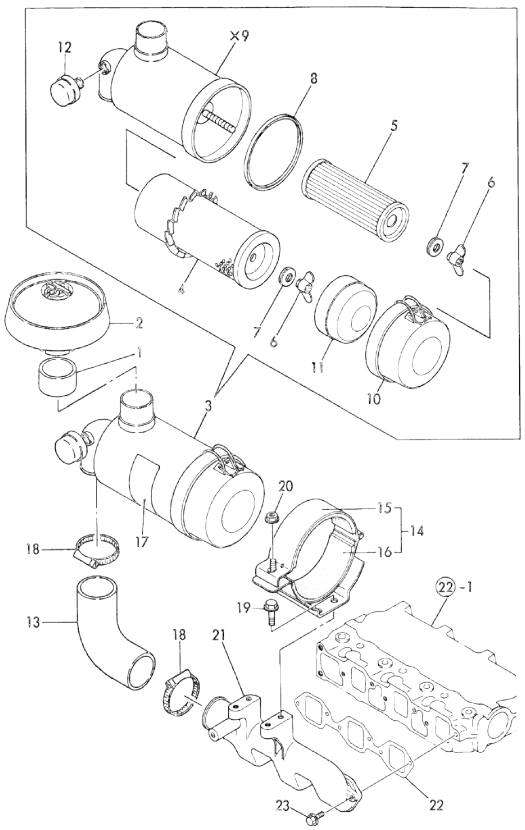

No.	Lev.	Parts No.	Description	Q'ty (A)	(B)	(C)	(D)	(E)	(F)	I	R
1	1	119288-12050	JOINT, PIPE		1						
2	1	121521-12400	CAP, RAIN		1						
3	1	119649-12500	CLEANER, AIR		1						
4	2	119631-12520	ELEMENT		1						
5	2	119631-12530	ELEMENT		1						
6	2	119631-12540	NUT		2						
6-1	2	119631-12540	NUT		1					K	
			(B=FROM 1ST)								
7	2	119631-12550	WASHER		2						
7-1	2	119631-12550	WASHER		1					K	
			(B=FROM 1ST)								
8	2	119631-12570	GASKET		1						
10	2	121472-12660	CAP		1						
11	2	121465-12700	RETAINER, ELEMENT		1						
12	2	121492-12950	INDICATOR		1						
13	1	119632-12551	PIPE, AIR INTAKE		1						
14	1	119632-12590	SUPPORT ASSY,CLEANER		1						
15	2	119632-12560	SUPPORT		1						
16	2	119640-12580	SEAT, RUBBER		2						
17	1	124764-12600	LABEL, AIR CLEANER		1						
17-1	1	129136-12600	LABEL, AIR CLEANER		1					R	
			(B=E/# 39614)								
18	1	23000-060000	CLAMP, 60		2						
19	1	26014-080202	BOLT, M8X 20		4						
20	1	26366-080002	NUT, M8		1						
21	1	119645-12100	MANIFOLD, AIR INTAKE		1						
22	1	119620-12110	GASKET, MANIFOLD		1						
22-1	1	119620-12111	GASKET, MANIFOLD		1					N	A
			(B=E/# 39614)								
23	1	26106-060202	BOLT, M6X 20 PLATED		6						

Remarks
(A) THIS PART IS ALSO SOLD BY GASKET SET(FIG 36.REF NO.9-2,P/# 719649 -92611.)

N:Old $\frac{\text{Yes}}{\text{No}}$ New. Q:Old $\frac{\text{No}}{\text{Yes}}$ New. R:Old $\frac{\text{Yes}}{\text{Yes}}$ New. S:Old $\frac{\text{No}}{\text{No}}$ New. W:Add. Z:Discontinued. F:Interchangeable by set. K:Q'ty Change

Copyright (C) YANMAR GLOBAL CS CO., LTD. All RightsReserved.

Fig.24. EXHAUST MANIFOLD & SILENCER

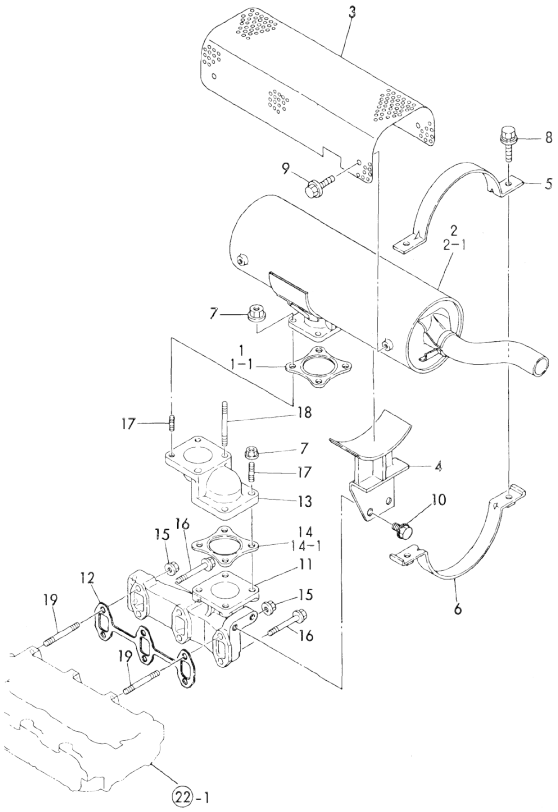

(A)=3TN66E-GB2
(B)=3TNA72E-GB2
(C)=3TN84E-GB2
(D)=4TN84E-GB2
(E)=
(F)=

No.	Lev.	Parts No.	Description	Q'ty (A)	(B)	(C)	(D)	(E)	(F)	I	R
1	1	121000-13200	GASKET, SILENCER		1						
1-1	1	121000-13201	GASKET, SILENCER		1					N	A
		(B=E/# 64491)									
2	1	119888-13500	SILENCER		1						
2-1	1	119888-13501	SILENCER		1					N	
		(B=E/# B4008)									
3	1	119888-13600	COVER, SILENCER		1						
4	1	119688-13651	STAY, SILENCER		1						
5	1	119888-13670	BAND, SILENCER		1						
6	1	119888-13680	BAND, SILENCER		1						
7	1	194990-22050	NUT, M8		6						
8	1	26014-080302	BOLT, M8X 30		2						
9	1	26106-080122	BOLT, M8X 12 PLATED		4						
10	1	26106-080162	BOLT, M8X 16 PLATED		2						
11	1	119631-13101	MANIFOLD, EXHAUST		1						
12	1	119620-13110	GASKET		1						A
13	1	119840-13150	PIPE		1						
14	1	121000-13200	GASKET, SILENCER		1						
14-1	1	121000-13201	GASKET, SILENCER		1					N	A
		(B=E/# 64491)									
15	1	194990-22050	NUT, M8		2						
16	1	26106-080402	BOLT, M8X 40 PLATED		4						
17	1	26216-080222	STUD, M8X 22		4						
18	1	26216-080552	STUD, M8X 55		2						
19	1	26216-080702	STUD, M8X 70		2						

Remarks
(A) THIS PART IS ALSO SOLD BY GASKET SET(FIG 36.REF NO.9-2,P/# 719649 -92611.)

N:Old ←Yes/No→ New. Q:Old ←No/Yes→ New, R:Old ←Yes/Yes→ New, S:Old ←No/No→ New. W:Add. Z:Discontinued. F:Interchangeable by set. K:Q'ty Change

Copyright (C) YANMAR GLOBAL CS CO., LTD. All RightsReserved.

Fig.25. CAMSHAFT & DRIVING GEAR

(A)=3TN66E-GB2
(B)=3TNA72E-GB2
(C)=3TN84E-GB2
(D)=4TN84E-GB2
(E)=
(F)=

No.	Lev.	Parts No.	Description	Q'ty (A)	(B)	(C)	(D)	(E)	(F)	I	R
1	1	119629-14580	CAMSHAFT ASSY		1					W	
		(B=EXXX)									
2	2	119620-14100	GEAR, CAMSHAFT		1						
2A	2	119620-02450	BEARING, THRUST		1						
3	2	22512-040120	KEY, 4X 12		1						
4	1	119620-14400	ROD, PUSH		6						
4-1	1	119620-14401	ROD, PUSH		6					N	
		(B=E/# 71586)									
5	1	119620-14200	TAPPET		6						
6	1	119660-01821	BEARING, FUEL CAM		1						
7	1	719660-14590	CAMSHAFT		1					W	
		(B=E/# 40609)									
8	2	22512-040120	KEY, 4X 12		1						
9	2	119660-25902	GEAR, PUMP		1						
10	2	24102-063034	BEARING, BALL 6303U		1						
11	1	26106-060162	BOLT, M6X 16 PLATED		3						
12	1	26587-080102	SCREW, M8X10		1						
13	1	119660-25022	RETAINER		1						
14	1	119660-25052	SHAFT, IDLE		1						
15	1	119620-25102	GEAR ASSY, IDLE		1						
16	1	119620-25912	BUSH		1						1
17	1	22242-000200	RING, 20		1						
18	1	26106-060122	BOLT, M6X 12 PLATED		3						
19	1	24101-062034	BEARING, BALL 6203		1						

Remarks
(1) REPAIR PART.

N:Old ←Yes/No→ New. Q:Old ←No/Yes→ New. R:Old ←Yes/Yes→ New. S:Old ←No/No→ New. W:Add. Z:Discontinued. F:Interchangeable by set. K:Q'ty Change

Copyright (C) YANMAR GLOBAL CS CO., LTD. All RightsReserved.

Fig.26. CRANKSHAFT & PISTON

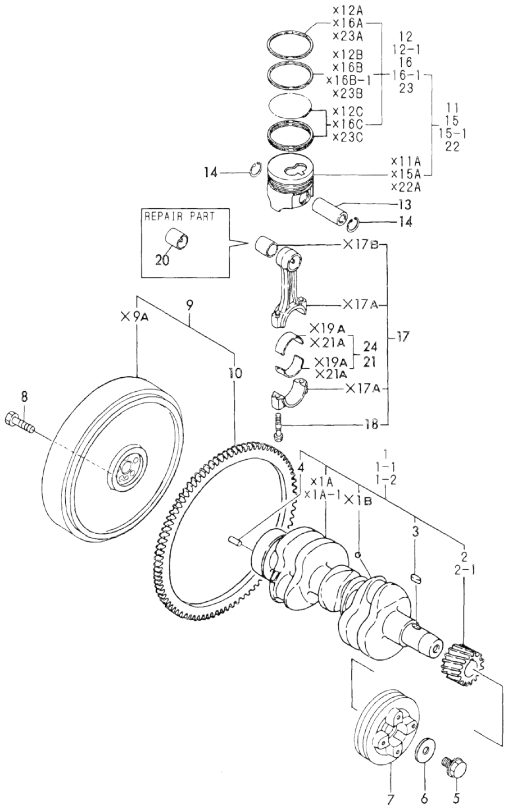

Remarks
(1) OVER-SIZE(O.S.=0.25) PART.
(2) REPAIR PART.
(3) UNDER-SIZE(U.S.=0.25) PART.
(4) OVER-SIZE(O.S.=0.5) PART.

(A)=3TN66E-GB2
(B)=3TNA72E-GB2
(C)=3TN84E-GB2
(D)=4TN84E-GB2
(E)=
(F)=

No.	Lev.	Parts No.	Description	Q'ty (A)	(B)	(C)	(D)	(E)	(F)	I	R
1	1	719660-21701	CRANKSHAFT ASSY		1						
1-1	1	719660-21700	CRANKSHAFT ASSY		1					N	
			(B=EXXX)								
1-2	1	119660-21710	CRANKSHAFT ASSY		1					N	
			(B=E/# 89416)								
2	2	119660-21201	GEAR, CRANKSHAFT		1						
2-1	2	119644-21200	GEAR, CRANKSHAFT		1					R	
			(B=E/# A5005)								
3	2	22512-040120	KEY, 4X 12		1						
4	2	129100-01580	PIN, M8X16		1						
5	1	119621-21680	BOLT, FLANGE 12X1.25		1						
6	1	119620-21941	WASHER		1						
7	1	119660-21651	V-PULLEY		1						
8	1	121111-21501	BOLT, FLYWHEEL		5						
9	1	119600-21580	FLYWHEEL ASSY		1						
10	2	119865-21600	GEAR, RING		1						
11	1	119620-22090	PISTON ASSY		3						
12	2	719620-22501	RING SET, PISTON		3						
12-1	2	719620-22500	RING SET, PISTON		3					R	
			(B=EXXX)								
13	1	119620-22300	PIN, PISTON		3						
14	1	22252-000210	RING, 21		6						
15	1	719620-22820	PISTON ASSY, 0.25 OS		3						1
15-1	1	119620-22900	PISTON ASSY, 0.25 OS		3					N	
			(B=FROM 1ST)								
16	2	719620-22540	RING SET, 0.25 OS		3						1
16-1	2	119620-22950	RING SET, 0.25 OS		3					N	
			(B=FROM 1ST)								
17	1	719620-23100	ROD ASSY, CONNECTING		3						
18	2	105225-23200	BOLT, CONNECTING ROD		6						
20	1	119620-23910	BEARING, PISTON PIN		3						2
21	1	719620-23610	BEARING ASSY, 0.25		3						3
22	1	119620-22920	PISTON ASSY, 0.50 OS		3						4
23	2	119620-22970	RING SET, 0.50 OS		3						4
24	1	719620-23600	BEARING, CRANK PIN		3						

N:Old ←Yes/No→ New. Q:Old ←No/Yes→ New. R:Old ←Yes/Yes→ New. S:Old ←No/No→ New. W:Add. Z:Discontinued. F:Interchangeable by set. K:Q'ty Change

Copyright (C) YANMAR GLOBAL CS CO., LTD. All RightsReserved.

Fig.27. LUB. OIL SYSTEM

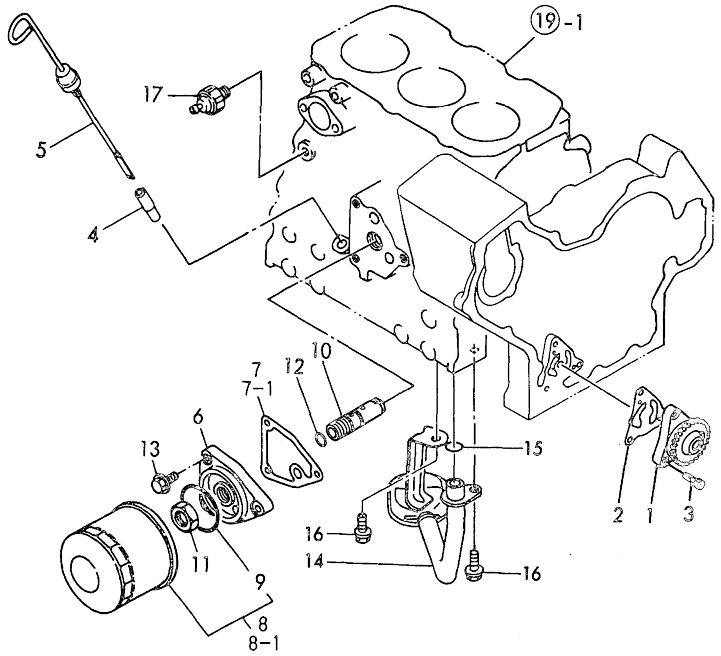

(A)=3TN66E-GB2
(B)=3TNA72E-GB2
(C)=3TN84E-GB2
(D)=4TN84E-GB2
(E)=
(F)=

No.	Lev.	Parts No.	Description	Q'ty (A)	(B)	(C)	(D)	(E)	(F)	I	R
1	1	119660-32001	PUMP ASSY, OIL		1						
2	1	119660-32020	GASKET, PUMP		1						
3	1	26450-060202	BOLT, M6X 20		3						
4	1	121520-34810	GUIDE, DIPSTICK		1						
5	1	119600-34820	DIPSTICK, OIL		1						
6	1	119660-35102	BRACKET, FILTER		1						
7	1	119660-35112	GASKET		1						
7-1	1	119660-35113	GASKET		1					N	A
		(B=E/# 37754)									
8	1	119660-35150	FILTER, LUB. OIL		1						
8-1	1	119305-35150	FILTER, OIL		1					N	
		(B=EXXX)									
9	2	124450-35110	O-RING		1					Z	A
		(B=EXXX)									
10	1	119660-35300	VALVE ASSY, CONTROL		1						
11	1	129150-35350	NUT		1						
12	1	24311-000160	O-RING, 1AP16.0		1						A
13	1	26106-080202	BOLT, M8X 20 PLATED		3						
14	1	119600-35091	PIPE ASSY, OIL INLET		1						
15	1	24311-000120	O-RING, 1AP12.0		1						
16	1	26106-060102	BOLT, M6X 10 PLATED		2						
17	1	124160-39450	SWITCH, 0.5KG		1						

Remarks
(A) THIS PART IS ALSO SOLD BY GASKET SET(FIG 36.REF NO.9-2,P/# 719649 -92611.)

N:Old ←Yes/No→ New. Q:Old ←No/Yes→ New. R:Old ←Yes/Yes→ New. S:Old ←No/No→ New. W:Add. Z:Discontinued. F:Interchangeable by set. K:Q'ty Change

Copyright (C) YANMAR GLOBAL CS CO., LTD. All RightsReserved.

Fig.28. COOLING WATER SYSTEM

(A)=3TN66E-GB2
(B)=3TNA72E-GB2
(C)=3TN84E-GB2
(D)=4TN84E-GB2
(E)=
(F)=

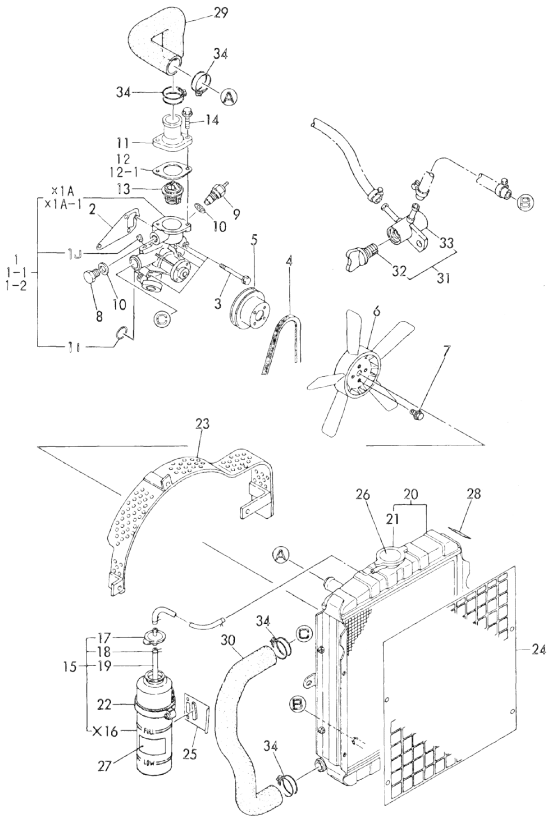

No.	Lev.	Parts No.	Description	Q'ty (A)	(B)	(C)	(D)	(E)	(F)	I	R
1	1	119660-42003	PUMP ASSY, WATER		1						
1-1	1	119660-42004	PUMP ASSY, WATER		1					N	
		(B=E/# 37754)									
1-2	1	119660-42005	PUMP ASSY, WATER		1					N	
		(B=E/# B4008)									
1I	2	119620-42320	O-RING		1						
1J	2	23871-030000	PLUG, R03		1						
2	1	119620-42020	GASKET, WATER PUMP		1						A
3	1	26106-080452	BOLT, M8X 45 PLATED		4						
4	1	119650-42291	V-BELT, 35		1						
5	1	119660-42350	V-PULLEY		1						
6	1	124700-44740	FAN, COOLING 5X310		1						
7	1	26014-060162	BOLT, M6X 16		4						
8	1	121450-42450	PLUG, M16		1						
9	1	121250-44901	SWITCH, 110		1						
10	1	124465-44950	GASKET, 16		2						
11	1	129350-49530	COVER, THERMOSTAT		1						
12	1	129350-49540	GASKET		1						
12-1	1	129350-49541	GASKET		1					N	A
		(B=E/# 37754)									
13	1	129350-49800	THERMOSTAT, 71		1						
14	1	26106-080202	BOLT, M8X 20 PLATED		2						
15	1	124450-44510	TANK ASSY, SUB		1						
17	2	124450-44530	CAP		1						
18	2	124450-44560	RETAINER		1						
19	2	23061-070230	PIPE, 7X 230		1						
20	1	171340-44510	RADIATOR		1						
21	2	123682-44210	CAP, RADIATOR		1						
22	1	124450-44550	BAND		1						
23	1	171301-44560	PROTECTOR, FAN		1						
24	1	129111-44590	PROTECTOR		1						
25	1	121256-44600	BRACKET, SUB TANK		1						
26	1	124764-44800	LABEL, RADIATOR		1						
27	1	124764-44810	LABEL, SUB TANK		1						
28	1	121400-44910	LABEL, RADIATOR		1						
29	1	119688-49010	PIPE, WATER		1						
30	1	119645-49020	PIPE, WATER		1						
31	1	129150-49100	COCK ASSY, 3-WAY		1						
32	2	129150-49080	COCK, DRAIN		1						
33	2	129150-49090	BODY, 3-WAY COCK		1						
34	1	23010-038000	CLAMP, 38		4						

Remarks
(A) THIS PART IS ALSO SOLD BY GASKET SET(FIG 36.REF NO.9-2,P/# 719649 -92611.)

N:Old ←Yes/No→ New. Q:Old ←No/Yes→ New. R:Old ←Yes/Yes→ New. S:Old ←No/No→ New. W:Add. Z:Discontinued. F:Interchangeable by set. K:Q'ty Change

Copyright (C) YANMAR GLOBAL CS CO., LTD. All RightsReserved.

Fig.29. FUEL INJECTION PUMP

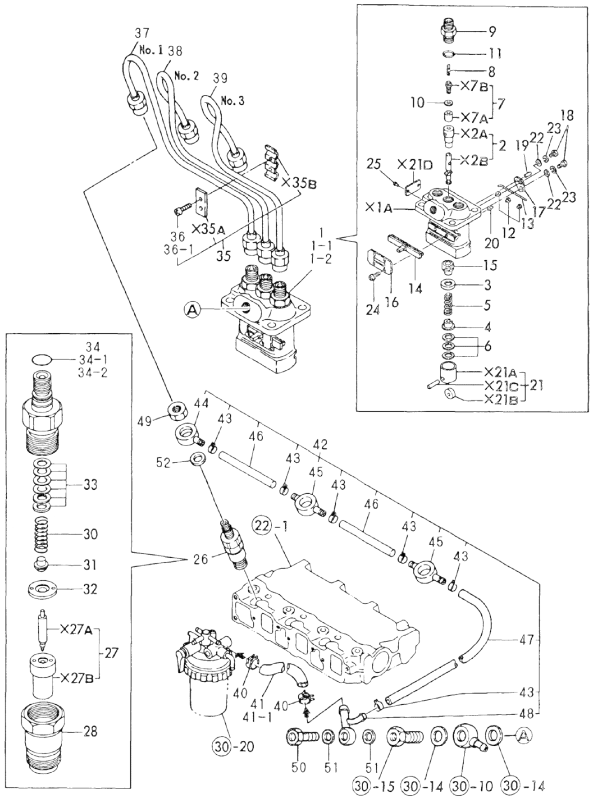

Remarks
(1) GOVERNOR ASSY(FIG NO.31)IS INCORPORATED IN THIS FUEL INJECTION PUMP ASSY(REF NO.1).
(M) MISPRINT

(A)=3TN66E-GB2
(B)=3TNA72E-GB2
(C)=3TN84E-GB2
(D)=4TN84E-GB2
(E)=
(F)=

No.	Lev.	Parts No.	Description	Q'ty (A)	(B)	(C)	(D)	(E)	(F)	I	R
1	1	719621-51100	PUMP ASSY, INJECTION		1						1
1-1	1	719621-51700	PUMP ASSY, INJECTION		1					R	M
		(B=EXXX)									
1-2	1	719621-51100	PUMP ASSY, INJECTION		1						1
2	2	119620-51101	PLUNGER ASSY		3						
3	2	119620-51170	RETAINER, SPRING A		3						
4	2	119620-51180	RETAINER, SPRING B		3						
5	2	119620-51190	SPRING, PLUNGER		3						
6	2	119620-51250	SHIM SET		3						
7	2	119620-51300	VALVE ASSY, DELIVERY		3						
8	2	105546-51330	SPRING, DELIVERY		3						
9	2	119620-51340	HOLDER, DELIVERY		3						
10	2	119620-51350	GASKET		3						
11	2	119620-51370	O-RING		3						
12	2	119620-51450	PIECE		3						
13	2	119620-51461	PIN		1						
14	2	119660-51500	RACK, CONTROL		1						
15	2	119620-51510	PINION		3						
16	2	119660-51530	RETAINER, RACK		1						
17	2	119620-51650	PLATE		2						
18	2	119620-51660	SCREW		2						
19	2	119620-51670	PIN		2						
20	2	119620-51680	PIN		1						
21	2	119620-51700	TAPPET ASSY		3						
22	2	22137-040000	WASHER, 4		2						
23	2	22217-040000	WASHER, SPRING 4		2						
24	2	26022-040082	SCREW, M4X 8		4						
25	2	26587-040102	SCREW, M4X10		2						
26	1	719620-53100	VALVE ASSY,INJECTION		3						
27	2	119620-53000	VALVE ASSY,INJECTION		3						
28	2	119620-53080	NUT, NOZZLE		3						
30	2	119620-53120	SPRING, NOZZLE		3						
31	2	114250-53130	SEAT, SPRING		3						
32	2	119620-53140	SPACER, VALVE STOP		3						
33	2	114250-53400	SHIM SET		3						
34	2	129155-61830	O-RING, S10		3						
34-1	2	129155-51580	O-RING		3					N	
		(B=E/# 72516)									
34-2	2	129155-61830	O-RING, S10		3					R	
		(B=E/# A1652)									
35	1	129150-59120	RETAINER, PIPE		1						
36	2	129150-59130	BOLT, M4X12		2						
36-1	2	129150-59131	BOLT, M4X14		2					N	
		(B=E/# 86256)									
37	1	119620-59811	PIPE ASSY, INJECTION		1						
38	1	119620-59821	PIPE ASSY, INJECTION		1						
39	1	119620-59831	PIPE ASSY, INJECTION		1						
40	1	124766-59050	CLIP, HOSE 12		2						
41	1	121250-59080	PIPE, FUEL D12X180		1						
41-1	1	119225-59560	PIPE, FUEL		1					N	
		(B=E/# 23896)									

N:Old ◄Yes/No► New. Q:Old ◄No/Yes► New. R:Old ◄Yes/Yes► New. S:Old ◄No/No► New. W:Add. Z:Discontinued. F:Interchangeable by set. K:Q'ty Change

++ CONTINUE ++

Copyright (C) YANMAR GLOBAL CS CO., LTD. All RightsReserved.

Fig.29. FUEL INJECTION PUMP

(A)=3TN66E-GB2
(B)=3TNA72E-GB2
(C)=3TN84E-GB2
(D)=4TN84E-GB2
(E)=
(F)=

No.	Lev.	Parts No.	Description	Q'ty (A)	(B)	(C)	(D)	(E)	(F)	I	R
42	1	119642-59540	PIPE ASSY, RETURN		1						
43	2	124066-59100	CLIP, HOSE 8		6						
44	2	119260-59520	JOINT		1						
45	2	119260-59530	JOINT		2						
46	2	105025-59550	PIPE, FUEL RETURN		2						
47	2	119642-59550	PIPE, FUEL RETURN		1						
48	2	119642-59570	JOINT, OVER FLOW		1						
49	1	119620-59700	NUT, NOZZLE		3						
50	1	124550-59820	BOLT, PIPE JOINT M8		1						
51	1	23414-080012	GASKET, 8X1.0		2						
52	1	23414-140000	GASKET, 14X1.0		3						

Remarks
(1) GOVERNOR ASSY(FIG NO.31)IS INCORPORATED IN THIS FUEL INJECTION PUMP ASSY(REF NO.1).
(M) MISPRINT

N:Old ←Yes/No→ New. Q:Old ←No/Yes→ New. R:Old ←Yes/Yes→ New. S:Old ←No/No→ New. W:Add. Z:Discontinued. F:Interchangeable by set. K:Q'ty Change

Copyright (C) YANMAR GLOBAL CS CO., LTD. All RightsReserved.

Fig.30. FUEL PIPE

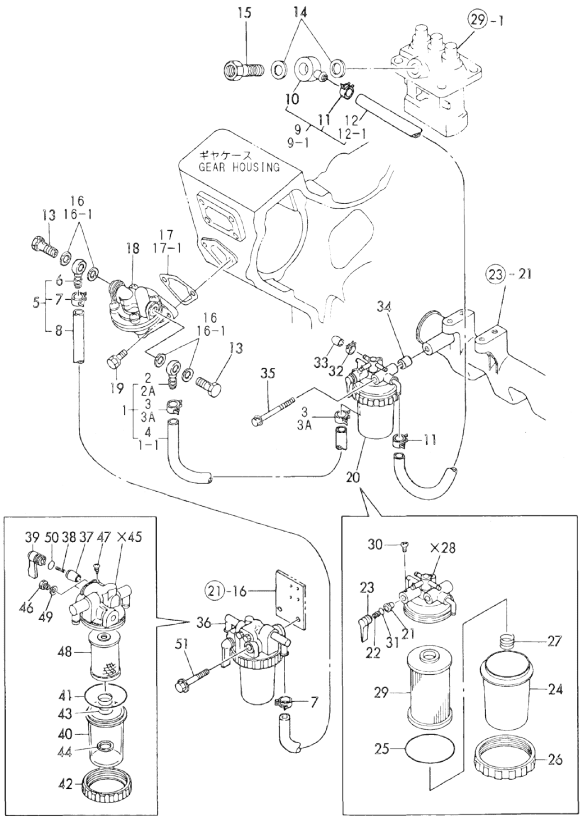

Remarks
(A) THIS PART IS ALSO SOLD BY GASKET SET(FIG 36.REF NO.9-2,P/# 719649 -92611.)

(A)=3TN66E-GB2
(B)=3TNA72E-GB2
(C)=3TN84E-GB2
(D)=4TN84E-GB2
(E)=
(F)=

No.	Lev.	Parts No.	Description	Q'ty (A)	(B)	(C)	(D)	(E)	(F)	I	R
1	1	119260-59020	PIPE ASSY, D12XL400		1						
1-1	1	121024-59090	PIPE, FUEL D12X450		1					N	
		(B=E/# 23896)									
2	2	104264-59030	JOINT, PIPE 8		1					Z	
		(B=E/# 17976)									
2A	1	104264-59030	JOINT, PIPE 8		1					W	
		(B=E/# 17976)									
3	2	124766-59050	CLIP, HOSE 12		2					Z	
		(B=E/# 17976)									
3A	1	124766-59050	CLIP, HOSE 12		2					W	
		(B=E/# 17976)									
4	2	121236-59080	PIPE, FUEL D12X400		1					Z	
		(B=E/# 17976)									
5	1	119260-59020	PIPE ASSY, D12XL400		1						
6	2	104264-59030	JOINT, PIPE 8		1						
7	2	124766-59050	CLIP, HOSE 12		2						
8	2	121236-59080	PIPE, FUEL D12X400		1						
9	1	124767-59031	PIPE ASSY, FUEL		1						
9-1	1	119225-59030	PIPE ASSY, FUEL		1					N	
		(B=EXXX)									
10	2	101304-59020	JOINT, PIPE 12		1						
11	2	124766-59050	CLIP, HOSE 12		2						
12	2	124767-59080	PIPE, FUEL		1						
12-1	2	119225-59560	PIPE, FUEL		1					N	
		(B=EXXX)									
13	1	105582-59150	BOLT, PIPE JOINT		2						
14	1	104200-59170	GASKET, 12		2						
15	1	119650-59200	BOLT, PIPE JOINT M12		1						
16	1	23414-080012	GASKET, 8X1.0		4						
16-1	1	22190-080002	WASHER, SEAL 6		4					N	
		(B=EXXX)									
17	1	121520-01850	GASKET		1						
17-1	1	121520-01851	GASKET		1					N	A
		(B=E/# 37754)									
18	1	119600-52021	PUMP ASSY, FUEL FEED		1						
19	1	26014-060202	BOLT, M6X 20		2						
20	1	119632-55620	FILTER ASSY, FUEL		1						
21	2	104200-55321	VALVE, TAPER		1						
22	2	104200-55330	SPRING, VALVE		1						
23	2	119810-55340	LEVER		1						
24	2	121254-55510	COVER		1						
25	2	102103-55520	O-RING		1						
26	2	110250-55610	RING, RETAINING		1						
27	2	121250-55620	SPRING		1						
29	2	124550-55700	FILTER, FUEL L=90		1						
30	2	104200-55750	SCREW, M4		1						
31	2	24311-240100	O-RING, 1AP10A		1						
32	1	124066-59100	CLIP, HOSE 8		1						
33	1	129150-59580	CAP		1						
34	1	119288-77340	PIECE, DISTANCE		1						
35	1	26106-081202	BOLT, M8X120 PLATED		1						

N:Old ←Yes/No→ New. Q:Old ←No/Yes→ New. R:Old ←Yes/Yes→ New. S:Old ←No/No→ New. W:Add. Z:Discontinued. F:Interchangeable by set. K:Q'ty Change

++ CONTINUE ++

Copyright (C) YANMAR GLOBAL CS CO., LTD. All RightsReserved.

Fig.30. FUEL PIPE

(A)=3TN66E-GB2
(B)=3TNA72E-GB2
(C)=3TN84E-GB2
(D)=4TN84E-GB2
(E)=
(F)=

No.	Lev.	Parts No.	Description	Q'ty (A)	(B)	(C)	(D)	(E)	(F)	I	R
36	1	129335-55700	SEPARATOR ASSY,WATER		1						
37	2	104200-55321	VALVE, TAPER		1						
38	2	104200-55330	SPRING, VALVE		1						
39	2	104200-55341	HANDLE		1						
40	2	124064-55510	COVER		1						
41	2	102103-55520	O-RING		1						
42	2	110250-55610	RING, RETAINING		1						
43	2	121257-55720	SPRING		1						
44	2	121257-55731	FLOAT		1						
46	2	101720-55750	PLUG, 6		2						
47	2	104200-55750	SCREW, M4		1						
48	2	171081-55910	SCREEN		1						
49	2	23418-060000	GASKET, 6X1.0		2						
50	2	24311-240100	O-RING, 1AP10A		1						
51	1	26014-080702	BOLT, M8X 70		1						

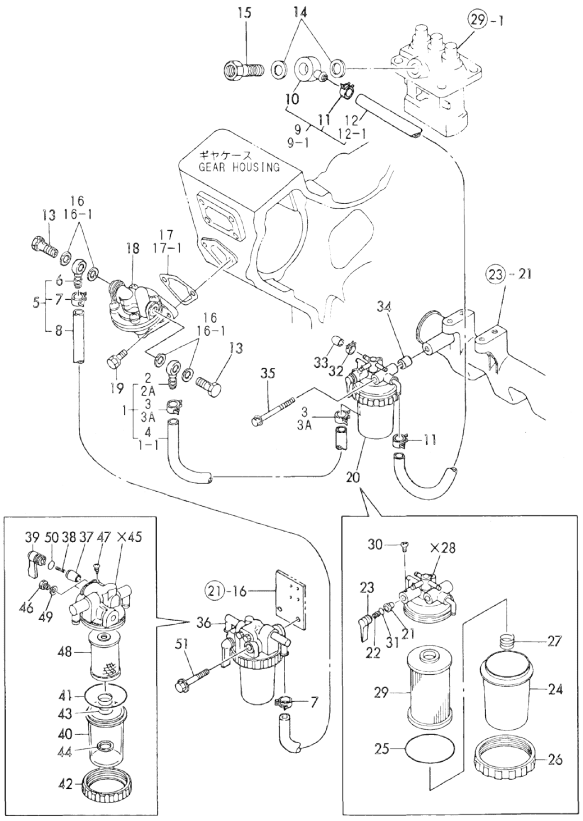

Remarks
(A) THIS PART IS ALSO SOLD BY GASKET SET(FIG 36.REF NO.9-2,P/# 719649 -92611.)

N:Old ←Yes/No→ New. Q:Old ←No/Yes→ New. R:Old ←Yes/Yes→ New. S:Old ←No/No→ New. W:Add. Z:Discontinued. F:Interchangeable by set. K:Q'ty Change

Copyright (C) YANMAR GLOBAL CS CO., LTD. All RightsReserved.

Fig.31. GOVERNOR

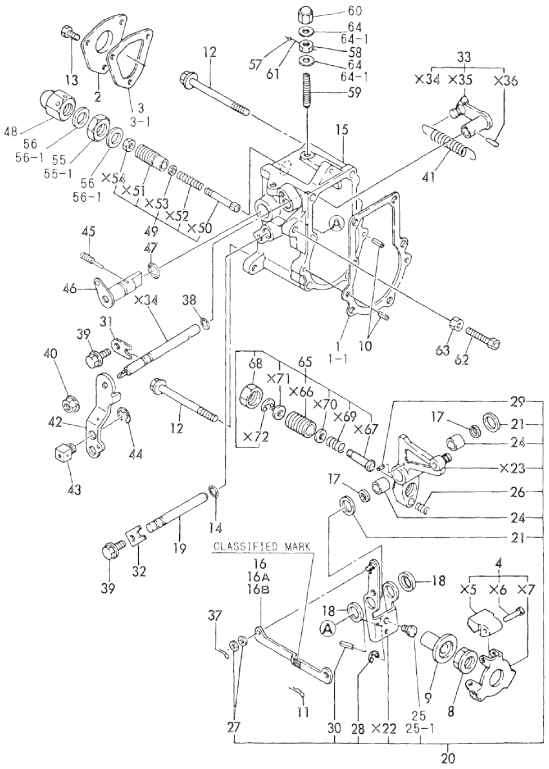

Remarks
(1) SELECTIVE PARTS:CERTAIN THE CLASSIFICATION MARK, THEN PLACE YOUR ORDER. (ILLUSTRATION)
(A) THIS PART IS ALSO SOLD BY GASKET SET(FIG 36.REF NO.9-2,P/# 719649 -92611.)

(A)=3TN66E-GB2
(B)=3TNA72E-GB2
(C)=3TN84E-GB2
(D)=4TN84E-GB2
(E)=
(F)=

No.	Lev.	Parts No.	Description	Q'ty (A)	(B)	(C)	(D)	(E)	(F)	I	R
1	1	119660-61051	GASKET		1						
1-1	1	119660-61052	GASKET		1					N	A
		(B=E/# 37754)									
2	1	119660-61060	COVER, GOVERNOR CASE		1						
3	1	119660-61070	GASKET		1						
3-1	1	119660-61071	GASKET		1					N	
		(B=E/# 37754)									
4	1	119600-61200	WEIGHT ASSY,GOVERNOR		1						
8	1	119660-61300	NUT		1						
9	1	119660-61341	SLEEVE		1						
10	1	22351-040010	PIN, SPRING 4.0X10		2						
11	1	22360-060000	PIN, SNAP 6		1						
12	1	26106-060702	BOLT, M6X 70 PLATED		6						
13	1	26116-050102	BOLT, M5X 10 PLATED		3						
14	1	129155-51280	O-RING, S6		1						
15	1	119660-61013	CASE, GOVERNOR		1						
16	1	119660-61121	LINK, NO MARK		1						1
16A	1	119660-61140	LINK, MARK :2		1						1
16B	1	119660-61150	LINK, MARK :3		1						1
17	1	119660-61460	SHIM SET		1						
18	1	129155-61480	SPACER ASSY		2						
19	1	119660-61491	SHAFT		1						
20	1	119600-61500	LEVER ASSY, GOVERNOR		1						
21	2	174307-51700	SHIM SET		2						
24	2	129155-61530	BUSH		2						
25	2	119600-61540	SHIFTER		1						
25-1	2	119600-61541	SHIFTER		1					N	
		(B=E/# A1652)									
26	2	119600-61650	SPRING, STARTING		1						
27	2	22117-040000	WASHER, 4		2						
28	2	22272-000040	RING, E- 4		1						
29	2	22351-020004	PIN, SPRING 2.0X 4		1					Z	
		(B=E/# A1652)									
30	2	22351-030014	PIN, SPRING 3.0X14		1						
31	1	119600-61900	RETAINER, SHAFT		1						
32	1	119660-61901	RETAINER, SHAFT		1						
33	1	119621-66091	SHAFT ASSY		1						
37	1	22360-040000	PIN, SNAP 4		1						
38	1	24341-000070	O-RING, 1AS7.0		1						
39	1	26106-060102	BOLT, M6X 10 PLATED		2						
40	1	194990-22050	NUT, M8		1						
41	1	119600-66020	SPRING, REGULATOR		1						
42	1	119621-66051	LEVER, REGULATOR		1						
43	1	124756-67510	RETAINER		1						
44	1	22272-000070	RING, E- 7		1						
45	1	124250-03640	SCREW		1						
46	1	119643-66560	LEVER, STOP		1						
47	1	24311-240100	O-RING, 1AP10A		1						
48	1	129100-61930	NUT, CAP		1						
49	1	119600-66530	LIMITER ASSY, FUEL		1						
55	1	124772-66750	NUT, LOCK M12		1						

N:Old ←Yes/No→ New. Q:Old ←No/Yes→ New. R:Old ←Yes/Yes→ New. S:Old ←No/No→ New. W:Add. Z:Discontinued. F:Interchangeable by set. K:Q'ty Change

++ CONTINUE ++

Copyright (C) YANMAR GLOBAL CS CO., LTD. All RightsReserved.

Fig.31. GOVERNOR

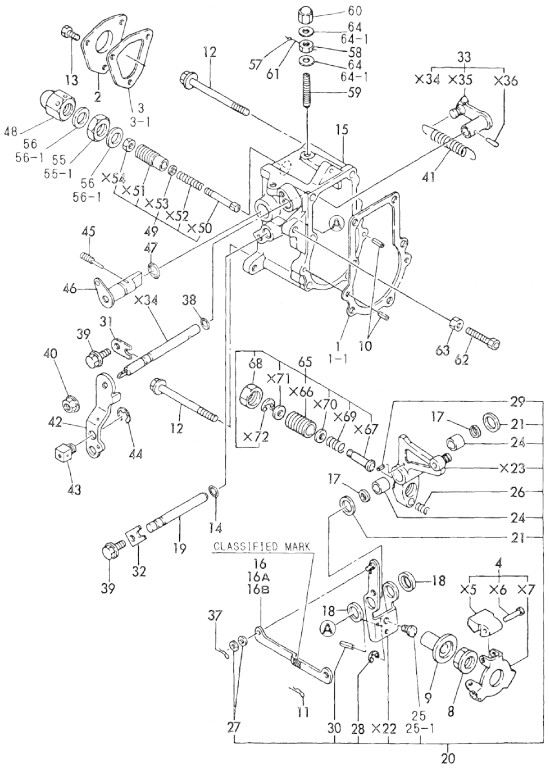

Remarks
(1) SELECTIVE PARTS:CERTAIN THE CLASSIFICATION MARK, THEN PLACE YOUR ORDER. (ILLUSTRATION)
(A) THIS PART IS ALSO SOLD BY GASKET SET(FIG 36.REF NO.9-2,P/# 719649 -92611.)

(A)=3TN66E-GB2
(B)=3TNA72E-GB2
(C)=3TN84E-GB2
(D)=4TN84E-GB2
(E)=
(F)=

No.	Lev.	Parts No.	Description	Q'ty (A)	(B)	(C)	(D)	(E)	(F)	I	R
55-1	1	26776-120002	NUT, LOCK M12		1						R
		(B=E/# 89416)									
56	1	43400-500450	SEAL WASHER 12S		2						
56-1	1	22190-120002	WASHER, SEAL 12		2						R
		(B=E/# 80945)									
57	1	135210-61090	LEAD		1						Z
		(B=EXXX)									
58	1	124550-66370	NUT, M6		1						
59	1	121575-66830	SCREW		1						
60	1	119600-66840	NUT, CAP		1						
61	1	22451-060000	WIRE, 0.6		1						Z
		(B=EXXX)									
62	1	26116-060304	BOLT, M6X 30 PLATED		1						
63	1	26756-060002	NUT, LOCK M6		1						
64	1	43400-500400	SEAL WASHER 6		2						
64-1	1	22190-060003	SEAL WASER 6		2						R
		(B=E/# 80945)									
65	1	119600-66700	ANGLEICH ASSY		1						
68	2	129155-61590	NUT, LOCK		1						

N:Old ←Yes/No→ New. Q:Old ←No/Yes→ New. R:Old ←Yes/Yes→ New. S:Old ←No/No→ New. W:Add. Z:Discontinued. F:Interchangeable by set. K:Q'ty Change

Copyright (C) YANMAR GLOBAL CS CO., LTD. All RightsReserved.

Fig.32. ENGINE STOP DEVICE

(A)=3TN66E-GB2
(B)=3TNA72E-GB2
(C)=3TN84E-GB2
(D)=4TN84E-GB2
(E)=
(F)=

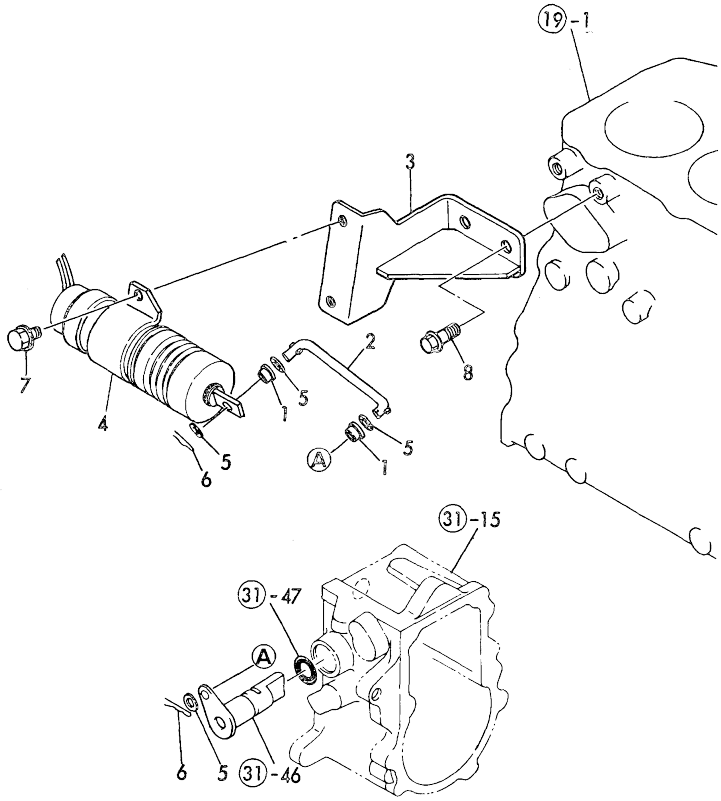

No.	Lev.	Parts No.	Description	Q'ty (A)	(B)	(C)	(D)	(E)	(F)	I	R
1	1	119245-66400	BUSH		2						
2	1	119643-66532	LINK, SOLENOID		1						
3	1	119643-66541	BRACKET, SOLENOID		1						
4	1	129155-66800	SOLENOID		1						
5	1	22137-040000	WASHER, 4		4						
6	1	22360-040000	PIN, SNAP 4		2						
7	1	26106-060102	BOLT, M6X 10 PLATED		2						
8	1	26106-080182	BOLT, M8X 18 PLATED		2						

N:Old ◄Yes/No► New. Q:Old ◄No/Yes► New. R:Old ◄Yes/Yes► New. S:Old ◄No/No► New. W:Add. Z:Discontinued. F:Interchangeable by set. K:Q'ty Change

Copyright (C) YANMAR GLOBAL CS CO., LTD. All RightsReserved.

Fig.33. STARTING MOTOR

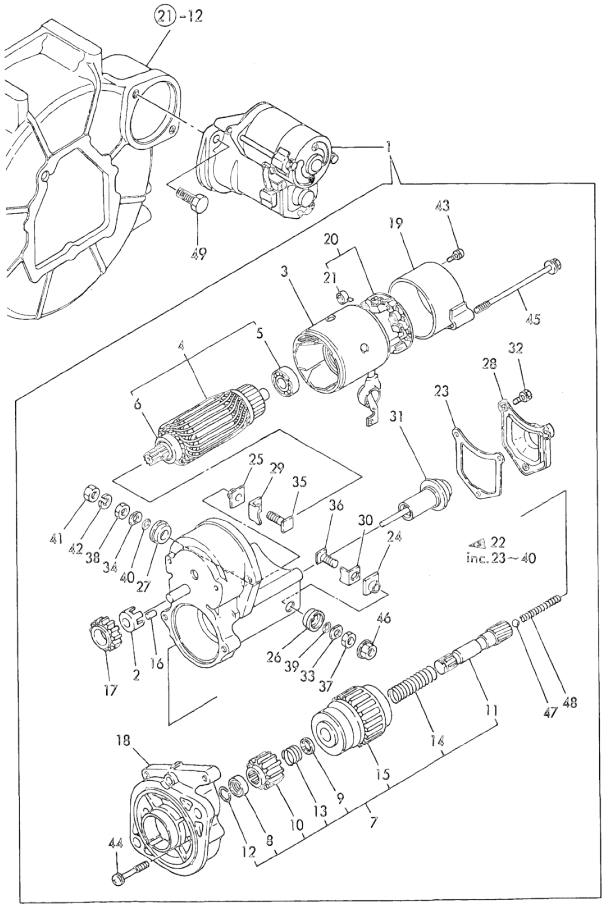

(A)=3TN66E-GB2
(B)=3TNA72E-GB2
(C)=3TN84E-GB2
(D)=4TN84E-GB2
(E)=
(F)=

No.	Lev.	Parts No.	Description	Q'ty (A)	(B)	(C)	(D)	(E)	(F)	I	R
1	1	119620-77011	STARTER		1						
2	2	X0280630011	RETAINER		1						
3	2	X0281003751	YOKE ASSY		1						
4	2	X0282001531	ARMATURE ASSY		1						
5	3	X9491001360	BEARING		1						
6	3	X9491001860	BEARING, BALL		1						
7	2	X0283005050	CLUTCH, STARTER		1						
8	3	X0280210230	NUT		1						
9	3	X0283270140	RETAINER		1						
10	3	X0283715030	PINION, STARTER		1						
11	3	X0283810040	SHAFT		1						
12	3	X9490721080	RING		1						
13	3	X9491703371	SPRING, COIL		1						
14	3	X9491704260	SPRING		1						
15	3	121120-77930	CASE ASSY, STARTER		1						
16	2	X0283060061	ROLLER		5						
17	2	X0283711420	PINION		1						
18	2	X0284004910	HOUSING		1						
19	2	X0285040631	FRAME ASSY		1						
20	2	X0285100460	HOLDER ASSY, BRUSH		1						
21	3	X9491730461	SPRING		4						
22	2	X0534006460	SWITCH		1						
23	3	X0534040320	GASKET		1						
24	3	X0534490120	BUSH		1						
25	3	X0534490120	BUSH		1						
26	3	X0534490230	BUSH		1						
27	3	X0534490230	BUSH		1						
28	3	X0535050620	COVER		1						
29	3	X0535130241	PLATE		1						
30	3	X0535130320	PLATE		1						
31	3	X0536600401	PLUNGER		1						
32	3	X9151005141	BOLT		3						
33	3	X9490170900	WASHER		1						
34	3	X9490170900	WASHER		1						
35	3	X9490441303	BOLT		1						
36	3	X9490441312	BOLT		1						
37	3	X9490502820	NUT		1						
38	3	X9490502820	NUT		1						
39	3	X9491402100	O-RING		1						
40	3	X9491402100	O-RING		1						
41	2	X9019008651	NUT		1						
42	2	X9025808001	WASHER		1						
43	2	X9490071810	SCREW		2						
44	2	X9490071970	SCREW		2						
45	2	X9490423330	BOLT		2						
46	2	X9490561370	NUT		1						
47	2	X9491200240	BALL		1						
48	2	X9491703380	SPRING		1						
49	1	26116-120252	BOLT, M12X 25 PLATED		2						

N:Old ◄Yes/No► New. Q:Old ◄No/Yes► New. R:Old ◄Yes/Yes► New. S:Old ◄No/No► New. W:Add. Z:Discontinued. F:Interchangeable by set. K:Q'ty Change

Copyright (C) YANMAR GLOBAL CS CO., LTD. All RightsReserved.

Fig.34. GENERATOR

(A)=3TN66E-GB2
(B)=3TNA72E-GB2
(C)=3TN84E-GB2
(D)=4TN84E-GB2
(E)=
(F)=

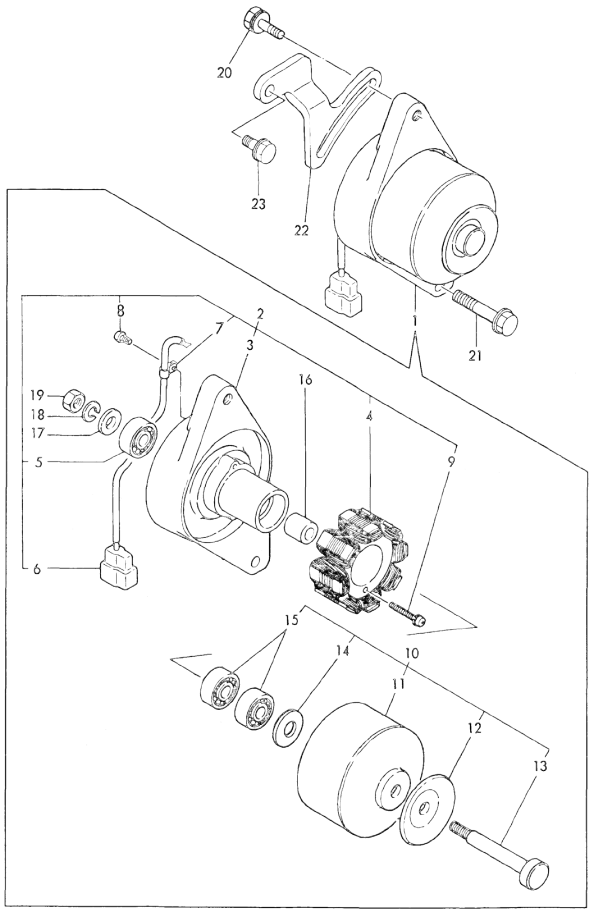

No.	Lev.	Parts No.	Description	Q'ty (A)	(B)	(C)	(D)	(E)	(F)	I	R
1	1	171301-77201	DYNAMO ASSY, 15A		1						
2	2	XM08137	PLATE ASSY		1						
3	3	XM08138	PLATE		1						
4	3	XM08180	STATOR SET		1						
5	3	XM27436	BEARING, BALL		1						
6	3	XM17878	COUPLER		1						
7	3	XM36410	CLAMP		1						
8	3	26022-040252	SCREW, M4X25		2						
9	3	XYSPS4008	SCREW		1						
10	2	XM82184	FLYWHEEL ASSY		1						
11	3	XM82110	FLYWHEEL		1						
12	3	XM72174	PULLEY		1						
13	3	XM72664	SHAFT		1						
14	3	XM37336	WASHER		1						
15	3	XM27436	BEARING, BALL		2						
16	2	106383-44720	SPACER		1						
17	2	106383-44730	WASHER		1						
18	2	22212-100000	SPRING WASHER 10		1						
19	2	26716-100002	NUT, M10		1						
20	1	26014-080252	BOLT, M8X 25		1						
21	1	26106-100402	BOLT, M10X 40 PLATED		1						
22	1	119600-77330	ADJUSTER		1						
23	1	26106-080182	BOLT, M8X 18 PLATED		1						
23-1	1	26106-080162	BOLT, M8X 16 PLATED		1					N	
		(B=E/# 40609)									

N:Old ◄Yes/No► New. Q:Old ◄No/Yes► New. R:Old ◄Yes/Yes► New. S:Old ◄No/No► New. W:Add. Z:Discontinued. F:Interchangeable by set. K:Q'ty Change

Copyright (C) YANMAR GLOBAL CS CO., LTD. All RightsReserved.

Fig.35. ELECTRIC PART

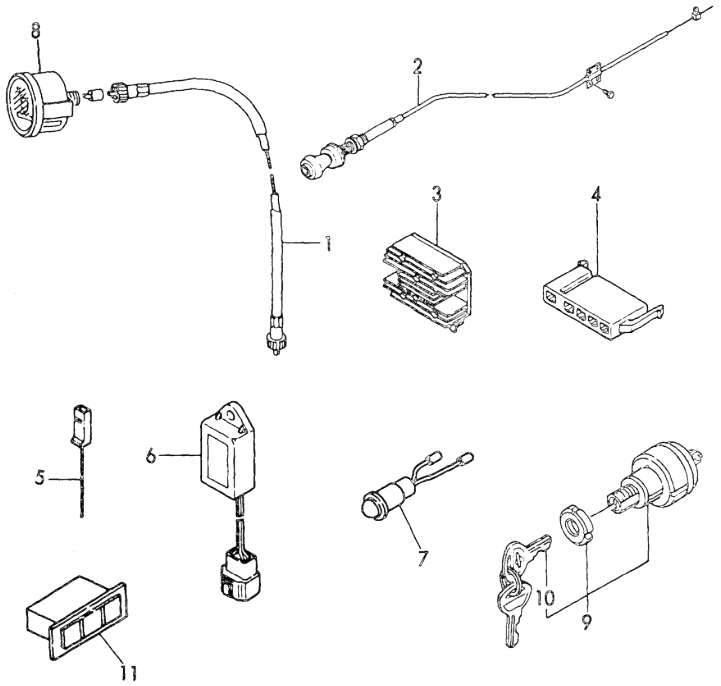

(A)=3TN66E-GB2
(B)=3TNA72E-GB2
(C)=3TN84E-GB2
(D)=4TN84E-GB2
(E)=
(F)=

No.	Lev.	Parts No.	Description	Q'ty (A)	(B)	(C)	(D)	(E)	(F)	I	R
1	1	194145-56901	CABLE ASSY, METER		1						
2	1	170022-67100	CABLE, PUSH-PULL		1						
3	1	119660-77710	LIMITER, CURRENT 15A		1						
4	1	171301-77720	COUPLER		1						
5	1	119643-77900	CONNECTOR, STARTER		1						
6	1	128300-77920	TIMER		1						
7	1	124732-77970	LAMP, PILOT		1						
8	1	171080-91100	TACHOMETER		1						
9	1	121400-91251	SWITCH, STARTER		1						
10	2	121400-91271	KEY, SWITCH		2						
11	1	170038-91310	LAMP		1						

N:Old ←Yes/No→ New. Q:Old ←No/Yes→ New. R:Old ←Yes/Yes→ New. S:Old ←No/No→ New. W:Add. Z:Discontinued. F:Interchangeable by set. K:Q'ty Change

Copyright (C) YANMAR GLOBAL CS CO., LTD. All RightsReserved.

Fig.36. GASKET SET(OPTIONAL) &TOOL

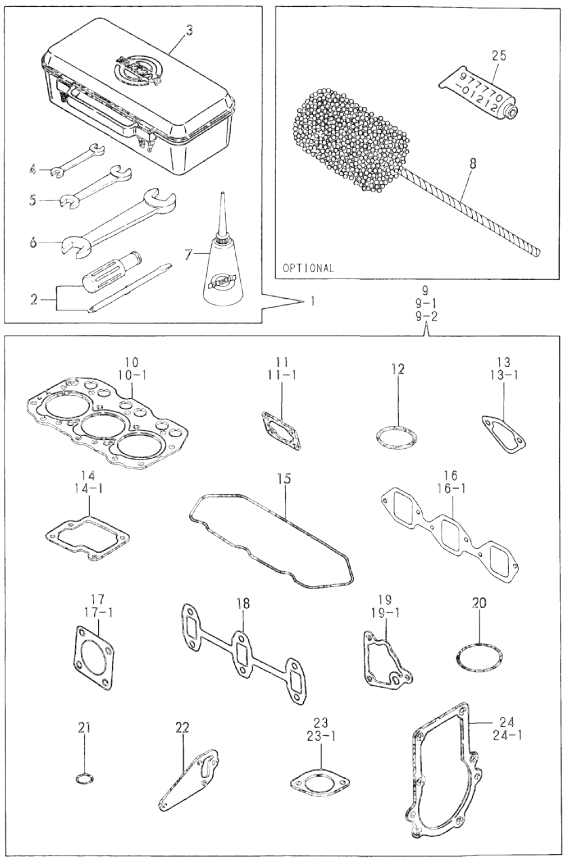

(A)=3TN66E-GB2
(B)=3TNA72E-GB2
(C)=3TN84E-GB2
(D)=4TN84E-GB2
(E)=
(F)=

No.	Lev.	Parts No.	Description	Q'ty (A)	(B)	(C)	(D)	(E)	(F)	I	R
1	1	171001-93100	BOX, TOOL		1						
2	2	104200-92350	DRIVER, SCREW		1						
3	2	104200-92600	BOX, TOOL		1						
4	2	28110-100120	SPANNER, 10X12		1						
5	2	28110-140170	SPANNER, 14X17		1						
6	2	28110-190220	SPANNER, 19X22		1						
7	2	28210-000140	OILER		1						
8	1	129400-92410	HONE		1						1
9	1	719649-92600	GASKET SET		1						1
9-1	1	719649-92610	GASKET SET		1					N	1
		(B=E/# 37754)									
9-2	1	719649-92611	GASKET SET		1					N	1
		(B=E/# 64491)									
10	2	119610-01340	GASKET, HEAD		1						
10-1	2	119620-01342	GASKET, HEAD		1					R	
		(B=E/# 81829)									
11	2	119660-01561	GASKET		1						
11-1	2	119660-01562	GASKET		1					N	
		(B=E/# 37754)									
12	2	24311-000320	O-RING, 1AP32.0		1						
13	2	121520-01850	GASKET		1						
13-1	2	121520-01851	GASKET		1					N	
		(B=E/# 37754)									
14	2	119620-03030	GASKET		1						
14-1	2	119620-03031	GASKET		1					N	
		(B=E/# 37754)									
15	2	119620-11310	GASKET, BONNET		1						
16	2	119620-12110	GASKET, MANIFOLD		1						
16-1	2	119620-12111	GASKET, MANIFOLD		1					N	
		(B=E/# 39614)									
17	2	121000-13200	GASKET, SILENCER		2						
17-1	2	121000-13201	GASKET, SILENCER		2					N	
		(B=E/# 64491)									
18	2	119620-13110	GASKET		1						
19	2	119660-35112	GASKET		1						
19-1	2	119660-35113	GASKET		1					N	
		(B=E/# 37754)									
20	2	124450-35110	O-RING		1					Z	
		(B=EXXX)									
21	2	24311-000160	O-RING, 1AP16.0		1						
22	2	119620-42020	GASKET, WATER PUMP		1						
23	2	129350-49540	GASKET		1						
23-1	2	129350-49541	GASKET		1					N	
		(B=E/# 37754)									
24	2	119660-61051	GASKET		1						
24-1	2	119660-61052	GASKET		1					N	
		(B=E/# 37754)									
25	2	977770-01212	GASKET, LIQUID		1						1

Remarks
(1) OPTIONAL PART.

N:Old ◄Yes/No► New. Q:Old ◄No/Yes► New. R:Old ◄Yes/Yes► New. S:Old ◄No/No► New. W:Add. Z:Discontinued. F:Interchangeable by set. K:Q'ty Change

Copyright (C) YANMAR GLOBAL CS CO., LTD. All RightsReserved.

Fig.37. CYLINDER BLOCK

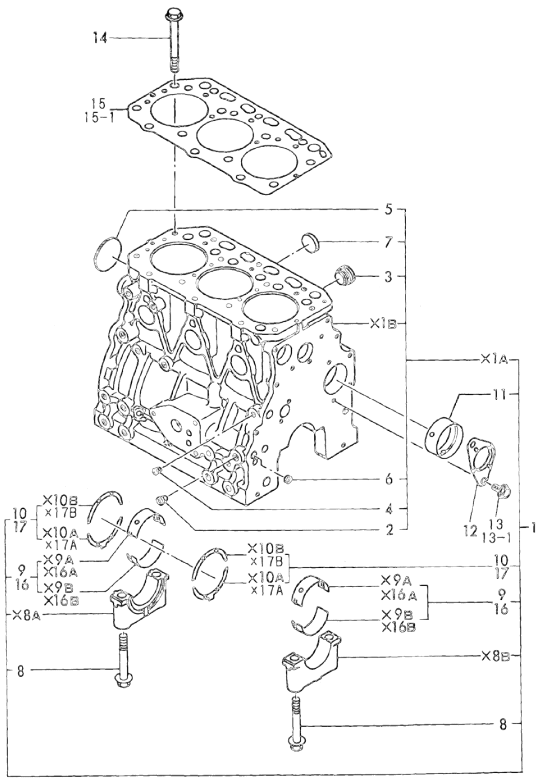

Remarks
(1) UNDER-SIZE(U.S.=0.25)PART.
(2) OVER-SIZE(O.S.=0.25)PART.
(A) THIS PART IS ALSO SOLD BY GASKET SET(FIG 56.REF NO.1-1,P/# 729119 -92601).

(A)=3TN66E-GB2
(B)=3TNA72E-GB2
(C)=3TN84E-GB2
(D)=4TN84E-GB2
(E)=
(F)=

No.	Lev.	Parts No.	Description	Q'ty (A)	(B)	(C)	(D)	(E)	(F)	I	R
1	1	729157-01560	BLOCK ASSY, CYLINDER			1					
2	3	124160-01910	PLUG, PT1/4			3					
3	3	171051-01921	PLUG, NPTF1			1					
4	3	23871-010000	PLUG, R01			1					
5	3	27231-500000	PLUG 50			1					
6	3	27241-120000	PLUG, 12			2					
7	3	27241-300000	PLUG 30			6					
8	2	129150-02020	BOLT, METAL CAP			8					
9	2	129150-02800	BEARING, MAIN			4					
10	2	129150-02930	BEARING, THRUST			2					
11	2	129795-02411	BUSH, CAMSHAFT			1					
12	1	129150-02450	BEARING, THRUST			1					
13	1	26106-080162	BOLT, M8X 16 PLATED			2					
13-1	1	26106-080142	BOLT, M8X 14 PLATED			2				N	
			(C=E/# 72095)								
14	1	129150-01200	BOLT, HEAD			14					
15	1	129157-01332	GASKET, HEAD			1					
15-1	1	129157-01333	GASKET, HEAD			1				R	A
			(C=E/# 61243)								
16	1	129150-02870	BEARING, 0.25 US			4					1
17	1	129150-02940	BEARING, THRUST 0.25			2					2

N:Old ←Yes/No→ New. Q:Old ←No/Yes→ New. R:Old ←Yes/Yes→ New. S:Old ←No/No→ New. W:Add. Z:Discontinued. F:Interchangeable by set. K:Q'ty Change

Copyright (C) YANMAR GLOBAL CS CO., LTD. All RightsReserved.

Fig.38. GEAR HOUSING

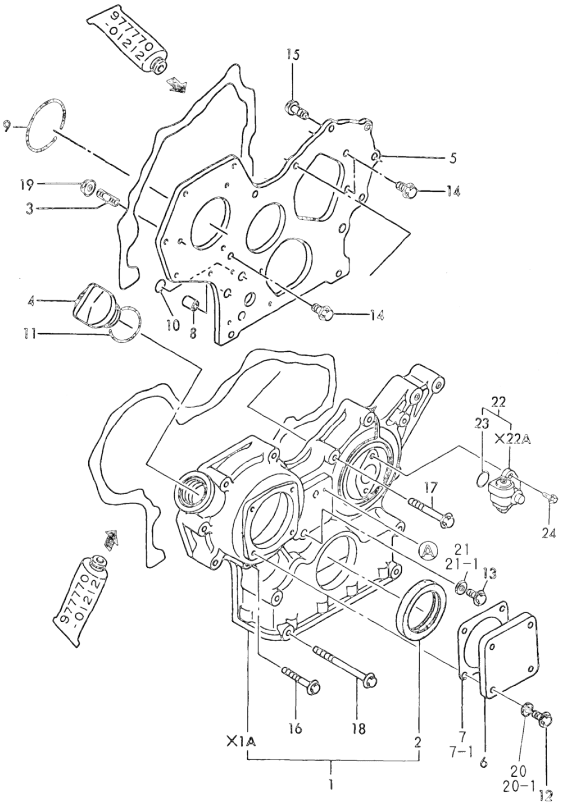

(A)=3TN66E-GB2
(B)=3TNA72E-GB2
(C)=3TN84E-GB2
(D)=4TN84E-GB2
(E)=
(F)=

No.	Lev.	Parts No.	Description	Q'ty (A)	(B)	(C)	(D)	(E)	(F)	I	R
1	1	719810-01500	CASE ASSY, GEAR			1					
2	2	129795-01800	SEAL, OIL			1					
3	1	121450-01560	STUD, M8X22			3					
4	1	124160-01751	COVER, FILLER			1					
5	1	129400-01520	FLANGE, GEAR CASE			1					
6	1	124240-01871	COVER			1					
7	1	124240-01882	GASKET			1					
7-1	1	124240-01883	GASKET (C=E/# 24010)			1				N	A
8	1	129795-01950	PIPE, KNOCK L=18			2					
9	1	121850-51960	O-RING			1					A
10	1	24311-000160	O-RING, 1AP16.0			2					
11	1	24311-000320	O-RING, 1AP32.0			1					A
12	1	26106-080122	BOLT, M8X 12 PLATED			4					
13	1	26106-080162	BOLT, M8X 16 PLATED			1					
14	1	26106-080162	BOLT, M8X 16 PLATED			3					
15	1	26106-080202	BOLT, M8X 20 PLATED			2					
16	1	26106-080452	BOLT, M8X 45 PLATED			6					
17	1	26106-080552	BOLT, M8X 55 PLATED			3					
18	1	26106-080852	BOLT, M8X 85 PLATED			4					
19	1	26366-080002	NUT, M8			3					
20	1	43400-500410	SEAL WASHER 8S			4					
20-1	1	22190-080002	WASHER, SEAL 6 (C=E/# 60897)			4				R	
21	1	43400-500410	SEAL WASHER 8S			1					
21-1	1	22190-080002	WASHER, SEAL 6 (C=E/# 60897)			1				R	
22	1	129150-91400	GEAR			1					
23	2	24341-000240	O-RING, 1AS24.0			1					
24	1	26106-060162	BOLT, M6X 16 PLATED			2					

Remarks
(A) THIS PART IS ALSO SOLD BY GASKET SET(FIG 56.REF NO.1-1,P/# 729119 -92601).

N:Old ←Yes/No→ New. Q:Old ←No/Yes→ New. R:Old ←Yes/Yes→ New. S:Old ←No/No→ New. W:Add. Z:Discontinued. F:Interchangeable by set. K:Q'ty Change

Copyright (C) YANMAR GLOBAL CS CO., LTD. All RightsReserved.

Fig.39. FLYWHEEL HOUSING & OIL SUMP

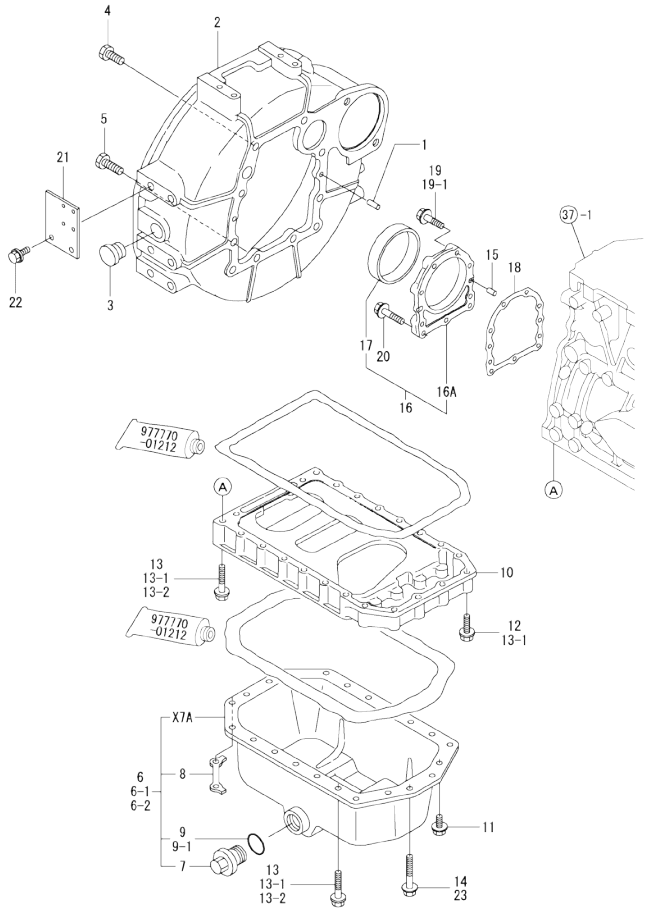

× MARK PARTS: NOT SOLD SEPARATEYLY.

(A)=3TN66E-GB2
(B)=3TNA72E-GB2
(C)=3TN84E-GB2
(D)=4TN84E-GB2
(E)=
(F)=

No.	Lev.	Parts No.	Description	Q'ty (A)	(B)	(C)	(D)	(E)	(F)	I	R
1	1	129100-01580	PIN, M8X16			2					
2	1	171301-01600	HOUSING, FLYWHEEL			1					
3	1	119620-01750	CAP			1					
4	1	26206-100252	BOLT, M10X 25 PLATED			6					
5	1	26206-100302	BOLT, M10X 30 PLATED			4					
6	1	771341-01540	SUMP ASSY, OIL			1					
6-1	1	129100-01770	SUMP ASSY, OIL			1					R
			(C=EXXX)								
6-2	1	129100-01760	SUMP ASSY, OIL			1					N
			(C=E/# 66559)								
7	2	171301-01640	PLUG, 22			1					
8	2	129100-01790	RETAINER			2					Z
			(C=E/# 62771)								
9	2	24341-000240	O-RING, 1AS24.0			1					
9-1	2	24341-000250	O-RING, 1AS25.0			1					N
			(C=E/# 66559)								
10	1	129100-01730	SPACER, OIL SUMP			1					
11	1	26106-080162	BOLT, M8X 16 PLATED			4					
12	1	26106-080252	BOLT, M8X 25 PLATED			2					
13	1	26106-080452	BOLT, M8X 45 PLATED			16					
13-1	1	26106-080452	BOLT, M8X 45 PLATED			20					K
			(C=E/# 62771)								
13-2	1	26106-080452	BOLT, M8X 45 PLATED			16					K
			(C=FROM 1ST)								
14	1	26106-080502	BOLT, M8X 50 PLATED			4					Z
			(C=E/# 62771)								
15	1	129100-01580	PIN, M8X16			2					
16	1	129100-01640	CASE ASSY, OIL SEAL			1					W
			(C=E/# 26456)								
16A	2	129150-01650	CASE, OIL SEAL			1					
17	2	129795-01780	SEAL, OIL			1					
18	1	129150-01660	GASKET			1					Z
			(C=EXXX)								
19	1	26106-080302	BOLT, M8X 30 PLATED			6					
19-1	1	129486-01670	BOLT, M8X30			6					R
			(C=E/# 72247)								
20	1	26106-080352	BOLT, M8X 35 PLATED			3					
21	1	129111-67010	SUPPORT, WIRE			1					
22	1	26106-080162	BOLT, M8X 16 PLATED			2					
23	1	26106-080502	BOLT, M8X 50 PLATED			4					W
			(C=FROM 1ST)								

N:Old ◄Yes/No► New. Q:Old ◄No/Yes► New. R:Old ◄Yes/Yes► New. S:Old ◄No/No► New. W:Add. Z:Discontinued. F:Interchangeable by set. K:Q'ty Change

Copyright (C) YANMAR GLOBAL CS CO., LTD. All RightsReserved.

Fig.40. CYLINDER HEAD & BONNET

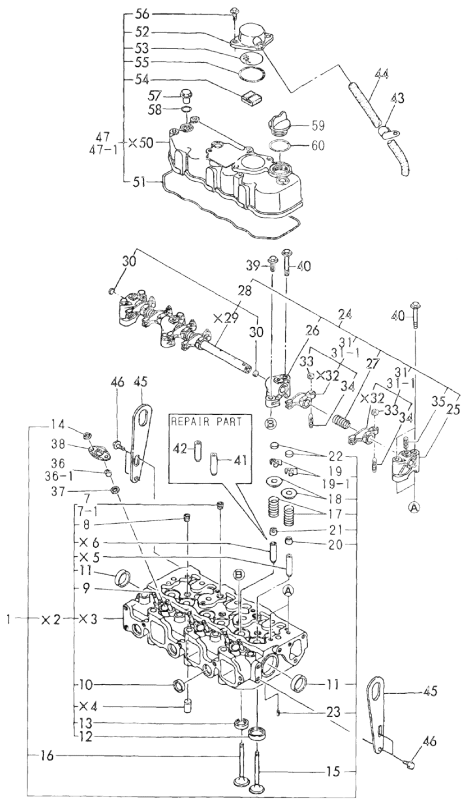

(A)=3TN66E-GB2
(B)=3TNA72E-GB2
(C)=3TN84E-GB2
(D)=4TN84E-GB2
(E)=
(F)=

No.	Lev.	Parts No.	Description	Q'ty (A)	(B)	(C)	(D)	(E)	(F)	I	R
1	1	771364-11700	HEAD ASSY, CYLINDER			1					
7	3	121850-11860	PLUG, PT1/4			2					
7-1	3	23871-020000	PLUG, R02			2					S
			(C=E/# 70664)								
8	3	23871-030000	PLUG, R03			3					
9	3	26216-060202	STUD, M6X 20			6					
10	3	27241-220000	PLUG, 22			3					
11	3	27241-400000	PLUG, 40			2					
12	3	129470-11080	SEAT, INTAKE VALVE			3					
13	3	129470-11090	SEAT, EXHAUST VALVE			3					
14	2	26366-060002	NUT, M6			6					
15	2	129100-11100	VALVE, INTAKE			3					
16	2	129100-11130	VALVE, EXHAUST			3					
17	2	129795-11120	SPRING, VALVE			6					
18	2	129795-11180	RETAINER, SPRING			6					
19	2	103338-11190	COTTER			6					
19-1	2	27310-080001	COTTER, 8			6					R
			(C=E/# 66116)								
20	2	121400-11340	SEAL, VALVE STEM			3					
21	2	124460-11340	SEAL, VALVE STEM			3					
22	2	129150-11370	CAP, VALVE			6					
23	2	22351-060012	PIN, SPRING 6.0X12			2					
24	1	129155-11241	SHAFT ASSY, ROCKER			1					
25	2	129155-11260	SUPPORT, ROCKER ARM			2					
26	2	129155-11270	SUPPORT, ROCKER ARM			2					
27	2	129150-11280	SPRING			3					
28	2	129150-11290	SHAFT, ROCKER ARM			1					
30	3	27241-100000	PLUG, 10			2					
31	2	729150-11651	ARM ASSY, ROCKER			6					
31-1	2	729402-11650	ARM ASSY, ROCKER			6					R
			(C=E/# 26456)								
33	3	129150-11750	NUT, M8			6					
34	3	129150-11230	SCREW, VALVE ADJUST			6					
35	2	26226-080182	STUD, M8X 18			3					
36	1	119625-11870	PROTECTOR, NOZZLE			3					
36-1	1	119625-11871	PROTECTOR, NOZZLE			3					R
			(C=E/# 65156)								
37	1	119625-11880	SEAT, NOZZLE			3					
38	1	119625-11900	RETAINER, NOZZLE			3					
39	1	26106-080252	BOLT, M8X 25 PLATED			2					
40	1	26106-080502	BOLT, M8X 50 PLATED			6					
41	1	120130-11860	GUIDE, VALVE			3					1
42	1	129150-11810	GUIDE, VALVE			3					1
43	1	129150-03100	RETAINER, PIPE			1					
44	1	171350-03090	PIPE , BREATHER 900			1					
45	1	124736-07900	LIFTER			2					
46	1	26106-080142	BOLT, M8X 14 PLATED			4					
47	1	729132-11520	BONNET ASSY, HEAD			1					
47-1	1	129100-11350	BONNET ASSY, HEAD			1					R
			(C=E/# 26456)								
51	2	129150-11310	GASKET, BONNET			1					A

Remarks
(1) REPAIR PART.
(A) THIS PART IS ALSO SOLD BY GASKET SET(FIG 56.REF NO.1-1,P/# 729119 -92601).

N:Old ◄Yes/No► New. Q:Old ◄No/Yes► New. R:Old ◄Yes/Yes► New. S:Old ◄No/No► New. W:Add. Z:Discontinued. F:Interchangeable by set. K:Q'ty Change

++ CONTINUE ++

Copyright (C) YANMAR GLOBAL CS CO., LTD. All RightsReserved.

Fig.40. CYLINDER HEAD & BONNET

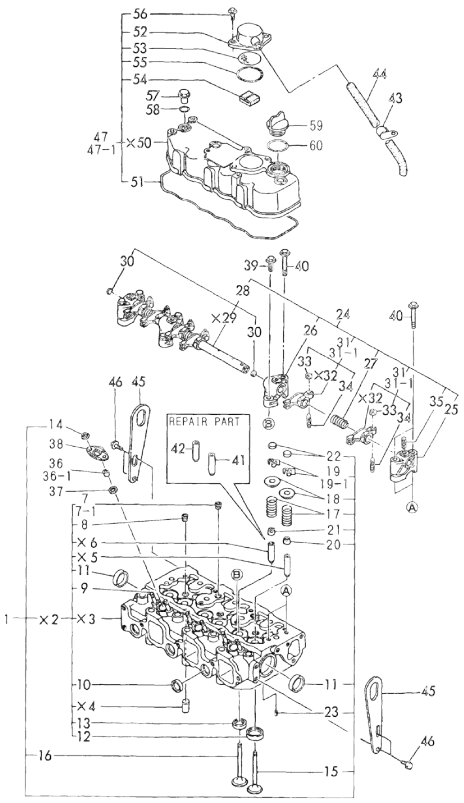

Remarks
(1) REPAIR PART.
(A) THIS PART IS ALSO SOLD BY GASKET SET(FIG 56.REF NO.1-1,P/# 729119 -92601).

(A)=3TN66E-GB2
(B)=3TNA72E-GB2
(C)=3TN84E-GB2
(D)=4TN84E-GB2
(E)=
(F)=

No.	Lev.	Parts No.	Description	Q'ty (A)	(B)	(C)	(D)	(E)	(F)	I	R
52	2	129150-03020	COVER, BREATHER			1					
53	2	129150-03080	PLATE, BAFFLE			1					
54	2	129150-03070	BAFFLE, BREATHER			1					
55	2	24341-000500	O-RING, 1AS50.0			1					A
56	2	26106-080162	BOLT, M8X 16 PLATED			2					
57	1	124160-11360	KNOB			3					
58	1	24311-000120	O-RING, 1AP12.0			3					A
59	1	124160-01751	COVER, FILLER			1					
60	1	24311-000320	O-RING, 1AP32.0			1					A

N:Old ←Yes/No→ New. Q:Old ←No/Yes→ New. R:Old ←Yes/Yes→ New. S:Old ←No/No→ New. W:Add. Z:Discontinued. F:Interchangeable by set. K:Q'ty Change

Copyright (C) YANMAR GLOBAL CS CO., LTD. All RightsReserved.

Fig.41. SUCTION MANIFOLD & AIR CLEANER

(A)=3TN66E-GB2
(B)=3TNA72E-GB2
(C)=3TN84E-GB2
(D)=4TN84E-GB2
(E)=
(F)=

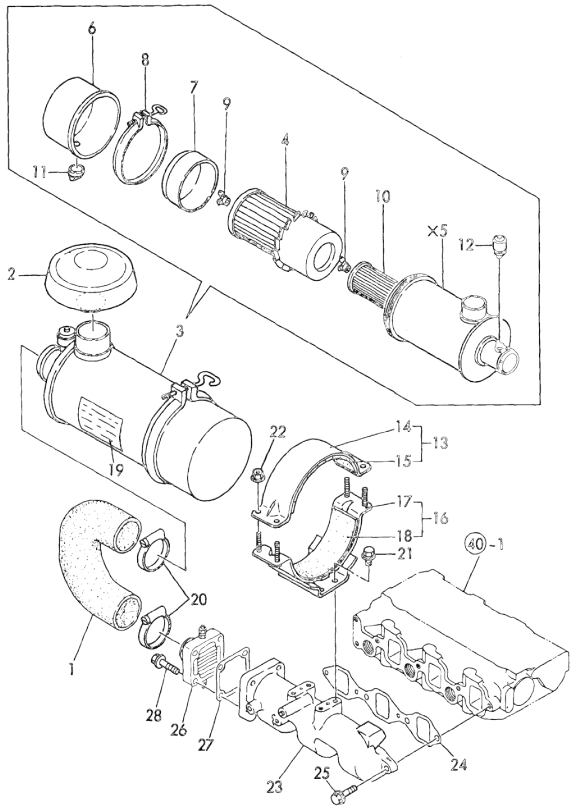

No.	Lev.	Parts No.	Description	Q'ty (A)	(B)	(C)	(D)	(E)	(F)	I	R
1	1	171351-12210	PIPE, AIR INTAKE			1					
2	1	121521-12400	CAP, RAIN			1					
3	1	121521-12500	CLEANER ASSY, AIR			1					
4	2	121420-12511	ELEMENT			1					
6	2	121422-12530	CUP			1					
7	2	121420-12540	SCARF, BAFFLE			1					
8	2	121420-12550	CLAMP ASSY			1					
9	2	121420-12561	NUT, WING			2					
10	2	121422-12570	ELEMENT			1					
11	2	121422-12580	VALVE, UNLOADER			1					
12	2	126650-12680	INDICATOR			1					
13	1	121400-12540	BAND ASSY, CLEANER			1					
14	2	121400-12560	BAND, AIR CLEANER			1					
15	2	121400-12570	SEAT, RUBBER B			1					
16	1	171351-12580	SUPPORT ASSY,CLEANER			1					
17	2	171351-12560	SUPPORT, AIR CLEANER			1					
18	2	171351-12570	SEAT, RUBBER			1					
19	1	171064-12600	LABEL, AIR CLEANER			1					
20	1	23000-060000	CLAMP, 60			2					
21	1	26106-080142	BOLT, M8X 14 PLATED			4					
22	1	26366-060002	NUT, M6			4					
23	1	129122-12100	MANIFOLD, AIR INTAKE			1					
24	1	129150-12110	GASKET, MANIFOLD			1					
24-1	1	129150-12111	GASKET, MANIFOLD			1				N	A
			(C=E/# 28787)								
25	1	26106-080252	BOLT, M8X 25 PLATED			4					
26	1	129120-77501	HEATER			1					
27	1	129150-77510	GASKET			1					
27-1	1	129150-77511	GASKET			1				N	A
			(C=E/# 28787)								
28	1	26106-080352	BOLT, M8X 35 PLATED			4					

Remarks
(A) THIS PART IS ALSO SOLD BY GASKET SET(FIG 56.REF NO.1-1,P/# 729119 -92601).

N:Old ◄Yes/No► New. Q:Old ◄No/Yes► New, R:Old ◄Yes/Yes► New, S:Old ◄No/No► New. W:Add. Z:Discontinued. F:Interchangeable by set. K:Q'ty Change

Copyright (C) YANMAR GLOBAL CS CO., LTD. All RightsReserved.

Fig.42. EXHAUST MANIFOLD & SILENCER

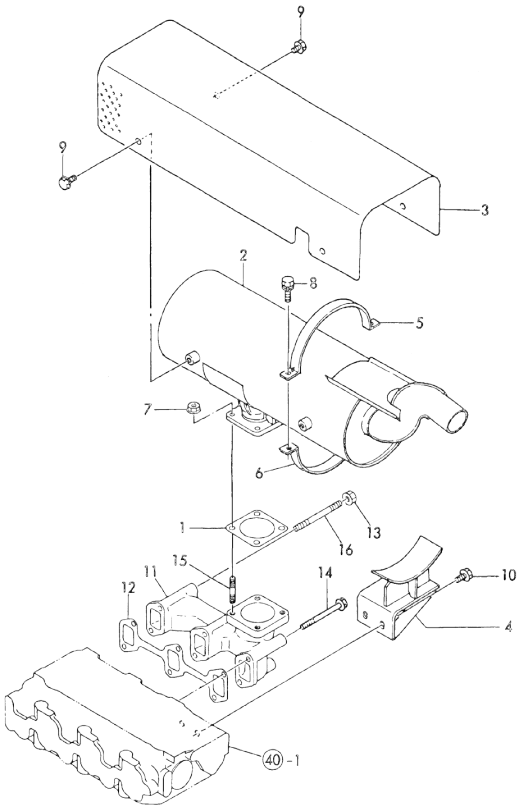

Remarks
(A) THIS PART IS ALSO SOLD BY GASKET SET(FIG 56.REF NO.1-1,P/# 729119 -92601).

(A)=3TN66E-GB2
(B)=3TNA72E-GB2
(C)=3TN84E-GB2
(D)=4TN84E-GB2
(E)=
(F)=

No.	Lev.	Parts No.	Description	Q'ty (A)	(B)	(C)	(D)	(E)	(F)	I	R
1	1	124701-11910	GASKET, SILENCER			1					
1-1	1	124701-11911	GASKET, SILENCER (C=E/# 28787)			1				N	A
2	1	129111-13500	SILENCER			1					
3	1	129111-13600	COVER, SILENCER			1					
4	1	129111-13650	STAY, SILENCER			1					
5	1	129111-13670	BAND, SILENCER			1					
6	1	129111-13680	BAND, SILENCER			1					
7	1	194990-22050	NUT, M8			4					
8	1	26014-080302	BOLT, M8X 30			2					
9	1	26106-080122	BOLT, M8X 12 PLATED			4					
10	1	26106-080142	BOLT, M8X 14 PLATED			2					
11	1	171350-13100	MANIFOLD, EXHAUST			1					
12	1	129150-13110	GASKET			1					A
13	1	194990-22050	NUT, M8			2					
14	1	26106-080802	BOLT, M8X 80 PLATED			4					
15	1	26216-080222	STUD, M8X 22			4					
16	1	26216-080802	STUD, M8X 80			2					

N:Old ←Yes/No→ New. Q:Old ←No/Yes→ New. R:Old ←Yes/Yes→ New. S:Old ←No/No→ New. W:Add. Z:Discontinued. F:Interchangeable by set. K:Q'ty Change

Copyright (C) YANMAR GLOBAL CS CO., LTD. All RightsReserved.

Fig.43. CAMSHAFT & DRIVING GEAR

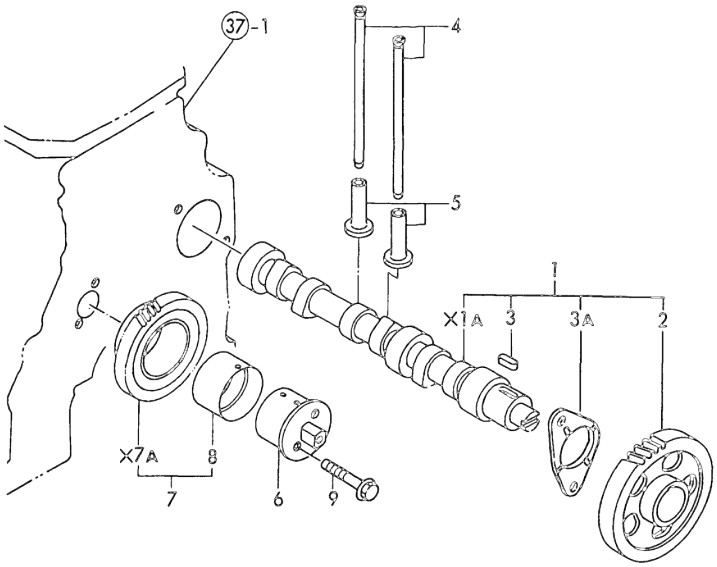

(A)=3TN66E-GB2
(B)=3TNA72E-GB2
(C)=3TN84E-GB2
(D)=4TN84E-GB2
(E)=
(F)=

No.	Lev.	Parts No.	Description	Q'ty (A)	(B)	(C)	(D)	(E)	(F)	I	R
1	1	129150-14580	CAMSHAFT ASSY (C=EXXX)			1				W	
1-1	1	129129-14580	CAMSHAFT ASSY (C=EXXX)			1				N	
2	2	129150-14101	GEAR, CAMSHAFT			1					
3	2	22512-070140	KEY, 7X 14			1					
3A	2	129150-02450	BEARING, THRUST			1					
4	1	129150-14400	ROD, PUSH L=178			6					
5	1	129150-14200	TAPPET			6					
6	1	129100-25061	SHAFT, IDLE			1					
7	1	129150-25101	GEAR ASSY, IDLE			1					
8	2	129150-25061	BUSH, IDLE GEAR			1					
9	1	26106-080452	BOLT, M8X 45 PLATED			2					

N:Old ◄Yes/No► New. Q:Old ◄No/Yes► New. R:Old ◄Yes/Yes► New. S:Old ◄No/No► New. W:Add. Z:Discontinued. F:Interchangeable by set. K:Q'ty Change

Copyright (C) YANMAR GLOBAL CS CO., LTD. All RightsReserved.

Fig.44. CRANKSHAFT & PISTON

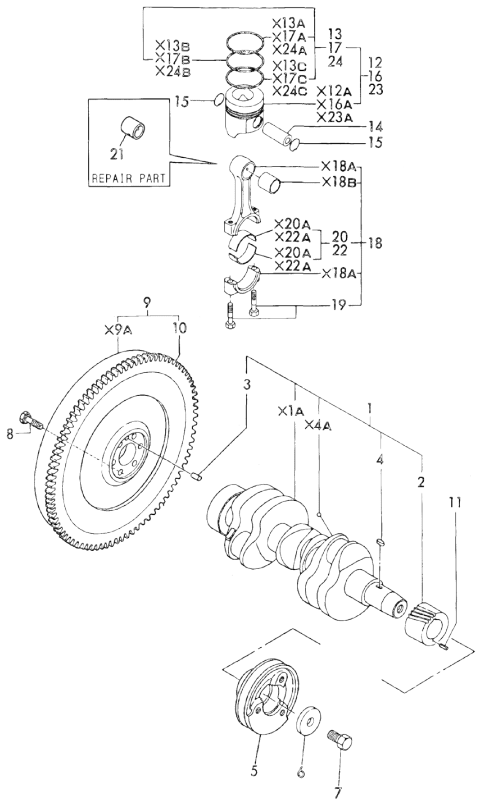

Remarks
(1) OVER-SIZE(O.S.=0.25)PART.
(2) REPAIR PART.
(3) UNDER-SIZE(U.S.=0.25)PART.
(4) OVER-SIZE(O.S=0.5)PART.

(A)=3TN66E-GB2
(B)=3TNA72E-GB2
(C)=3TN84E-GB2
(D)=4TN84E-GB2
(E)=
(F)=

No.	Lev.	Parts No.	Description	Q'ty (A)	(B)	(C)	(D)	(E)	(F)	I	R
1	1	729102-21700	CRANKSHAFT ASSY			1					
2	2	129150-21200	GEAR, CRANKSHAFT			1					
3	2	129100-01580	PIN, M8X16			1					
4	2	22512-070140	KEY, 7X 14			1					
5	1	171340-21650	V-PULLEY			1					
6	1	129795-21661	WASHER			1					
7	1	121850-21680	BOLT			1					
8	1	121111-21501	BOLT, FLYWHEEL			6					
9	1	171340-21580	FLYWHEEL ASSY			1					
10	2	119685-21600	GEAR, RING			1					
10-1	2	119865-21600	GEAR, RING (C=EXXX)			1				N	
11	1	22351-040010	PIN, SPRING 4.0X10			1					
12	1	129105-22090	PISTON ASSY			3					
13	2	729105-22500	RING SET, PISTON			3					
14	1	129150-22300	PIN, PISTON D26 L66			3					
15	1	121100-22400	CIRCLIP			6					
16	1	729105-22910	PISTON ASSY, 0.25 OS			3					1
17	2	729105-22950	RING SET, 0.25 OS			3					1
17-1	2	729105-22951	RING SET, 0.25 OS (C=FROM 1ST)			3				N	1
18	1	729150-23700	ROD ASSY, CONNECTING			3					
18-1	1	729402-23100	ROD ASSY, CONNECTING (C=E/# 26456)			3				R	
19	2	121550-23200	BOLT, CONNECTING ROD			6					
20	2	129150-23600	BEARING, CRANK PIN			3					
21	1	129100-23910	BEARING, PISTON PIN			3					2
22	1	129150-23610	BEARING, 0.25 US			3					3
23	1	129105-22920	PISTON ASSY, 0.50 OS			3					4
24	2	129105-22970	RING SET, 0.50 OS			3					4

N:Old ←Yes/No→ New. Q:Old ←No/Yes→ New. R:Old ←Yes/Yes→ New. S:Old ←No/No→ New. W:Add. Z:Discontinued. F:Interchangeable by set. K:Q'ty Change

Copyright (C) YANMAR GLOBAL CS CO., LTD. All RightsReserved.

Fig.45. LUB.OIL SYSTEM

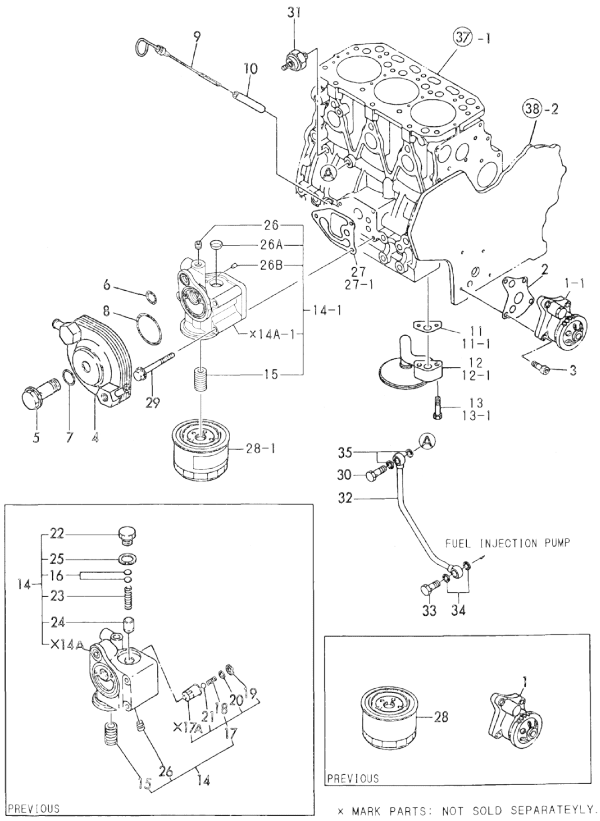

× MARK PARTS: NOT SOLD SEPARATEYLY.

Remarks
(A) THIS PART IS ALSO SOLD BY GASKET SET(FIG 56.REF NO.1-1,P/# 729119 -92601).

(A)=3TN66E-GB2
(B)=3TNA72E-GB2
(C)=3TN84E-GB2
(D)=4TN84E-GB2
(E)=
(F)=

No.	Lev.	Parts No.	Description	Q'ty (A)	(B)	(C)	(D)	(E)	(F)	I	R
1	1	129553-32000	PUMP ASSY, OIL			1					
1-1	1	129001-32001	PUMP ASSY, OIL (C=E/# 66116)			1				S	
2	1	129150-32020	GASKET, PUMP			1					A
3	1	26450-060252	BOLT, M6X 25			4					
4	1	129103-33031	COOLER, OIL			1					
5	1	129103-33132	BOLT			1					
6	1	24311-000200	O-RING, 1AP20.0			1					
7	1	24311-000210	O-RING, 1AP21.0			1					
8	1	24321-000550	O-RING, 1AG55.0			1					
9	1	129403-34800	DIPSTICK, OIL			1					
10	1	121520-34810	GUIDE, DIPSTICK			1					
11	1	129150-35040	GASKET			1					
11-1	1	129150-35041	GASKET (C=E/# 28787)			1				N	A
12	1	129100-35300	PIPE ASSY, OIL INLET			1					
12-1	1	129100-35301	PIPE ASSY, OIL INLET (C=E/# 24010)			1				N	
13	1	26116-080352	BOLT, M8X 35 PLATED			2					
13-1	1	26106-080352	BOLT, M8X 35 PLATED (C=E/# 21241)			2				N	
14	1	129103-35101	BRACKET ASSY, FILTER			1					
14-1	1	129418-35100	BRACKET ASSY (C=E/# 66116)			1				S	
15	2	129100-35140	STUD			1					
16	2	121850-35200	SHIM SET (C=E/# 66116)			1				Z	
17	2	129553-35500	VALVE ASSY, BYPASS (C=E/# 15862)			1				Z	
18	3	129553-35520	SPRING (C=E/# 15862)			1				Z	
19	3	129553-35530	RETAINER, SPRING (C=E/# 15862)			1				Z	
20	3	129553-35540	SHIM (C=E/# 15862)			1				Z	
21	3	24190-130001	BALL, STEEL 13/32 (C=E/# 15862)			1				Z	
22	2	124223-35510	RETAINER, SPRING (C=E/# 66116)			1				Z	
23	2	121850-35520	SPRING (C=E/# 66116)			1				Z	
24	2	121850-35531	VALVE, CONTROL (C=E/# 66116)			1				Z	
25	2	23414-180000	GASKET, 18X1.0 (C=E/# 66116)			1				Z	
26	2	23871-020000	PLUG, R02			1					
26A	2	27241-200000	PLUG, 20 (C=E/# 66116)			1				W	
26B	2	22312-060080	PIN, PARALLEL M6X 8 (C=E/# 66116)			2				W	
27	1	129103-35121	GASKET			2					

N:Old ←Yes/No→ New. Q:Old ←No/Yes→ New. R:Old ←Yes/Yes→ New. S:Old ←No/No→ New. W:Add. Z:Discontinued. F:Interchangeable by set. K:Q'ty Change

++ CONTINUE ++

Copyright (C) YANMAR GLOBAL CS CO., LTD. All RightsReserved.

Fig.45. LUB.OIL SYSTEM

(A)=3TN66E-GB2
(B)=3TNA72E-GB2
(C)=3TN84E-GB2
(D)=4TN84E-GB2
(E)=
(F)=

No.	Lev.	Parts No.	Description	Q'ty (A)	(B)	(C)	(D)	(E)	(F)	I	R
27-1	1	129103-35122	GASKET (C=E/# 28787)			1				N	A
28	1	129150-35150	FILTER 90X80L			1					
28-1	1	129150-35151	FILTER, D80XL80 (C=EXXX)			1				S	
29	1	26106-080752	BOLT, M8X 75 PLATED			3					
30	1	124160-39140	BOLT, PIPE JOINT M10			1					
31	1	124160-39450	SWITCH, 0.5KG			1					
32	1	129150-39450	PIPE ASSY, OIL			1					
33	1	124550-59820	BOLT, PIPE JOINT M8			1					
34	1	23414-080000	GASKET, 8X1.0			2					
35	1	23414-100000	GASKET, 10X1.0			2					

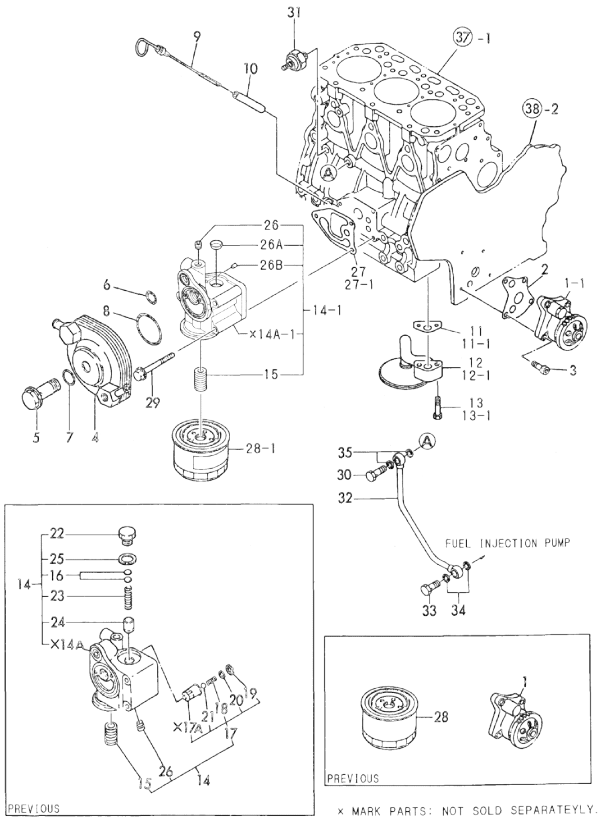

× MARK PARTS: NOT SOLD SEPARATEYLY.

Remarks
(A) THIS PART IS ALSO SOLD BY GASKET SET(FIG 56.REF NO.1-1,P/# 729119 -92601).

N:Old ←Yes/No→ New. Q:Old ←No/Yes→ New, R:Old ←Yes/Yes→ New. S:Old ←No/No→ New. W:Add. Z:Discontinued. F:Interchangeable by set. K:Q'ty Change

Copyright (C) YANMAR GLOBAL CS CO., LTD. All RightsReserved.

Fig.46. COOLING WATER SYSTEM

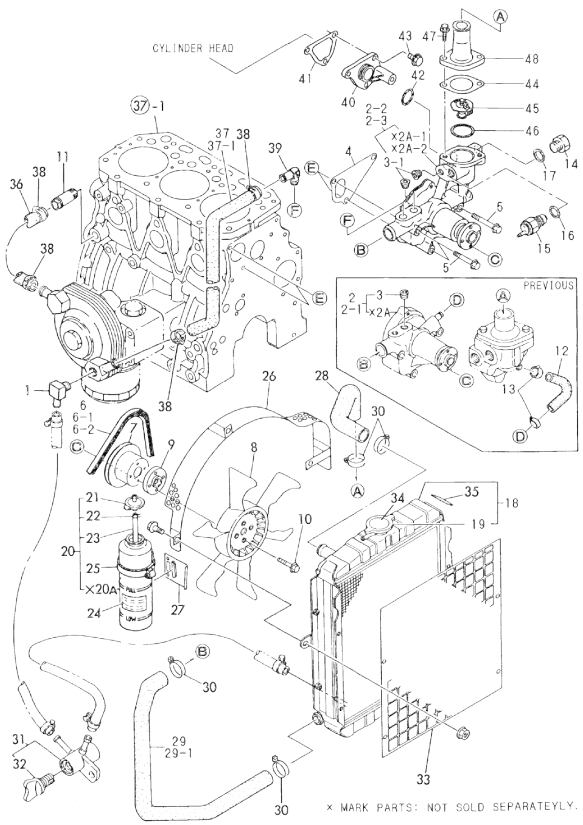

(A)=3TN66E-GB2
(B)=3TNA72E-GB2
(C)=3TN84E-GB2
(D)=4TN84E-GB2
(E)=
(F)=

No.	Lev.	Parts No.	Description	Q'ty (A)	(B)	(C)	(D)	(E)	(F)	I	R
1	1	121750-49110	JOINT			1					
2	1	129100-42001	PUMP ASSY, WATER			1					
2-1	1	129100-42002	PUMP ASSY, WATER			1					N
			(C=E/# 28787)								
2-2	1	129001-42001	PUMP ASSY, WATER			1					S
			(C=E/# 71679)								
2-3	1	129001-42002	PUMP ASSY, WATER			1					N
			(C=E/# 72247)								
3	2	23871-030000	PLUG, R03			1					
3-1	2	23871-030000	PLUG, R03			2					K
			(C=E/# 71679)								
4	1	129100-42020	GASKET, WATER PUMP			1					A
5	1	26106-080602	BOLT, M8X 60 PLATED			3					
6	1	124732-42290	V-BELT, AX37			1					
6-1	1	25132-003700	V-BELT, A37			1					R
			(C=E/# 68657)								
6-2	1	25132-003800	V-BELT, A38			1					N
			(C=E/# 71679)								
7	1	129403-42380	V-PULLEY, D=110			1					
8	1	171340-44740	FAN, COOLING D335XNF			1					
9	1	124574-44761	SPACER, FAN			1					
10	1	26014-060252	BOLT, M6X 25			4					
11	1	129122-44480	JOINT			1					
12	1	129100-49050	PIPE, WATER			1					Z
			(C=E/# 71679)								
13	1	23000-016000	CLAMP, 16			2					Z
			(C=E/# 71679)								
14	1	121450-42450	PLUG, M16			1					
15	1	121250-44901	SWITCH, 110			1					
16	1	124465-44950	GASKET, 16			1					A
17	1	124465-44950	GASKET, 16			1					A
18	1	171440-44500	RADIATOR			1					
19	2	123682-44210	CAP, RADIATOR			1					
20	1	124450-44510	TANK ASSY, SUB			1					
21	2	124450-44530	CAP			1					
22	2	124450-44560	RETAINER			1					
23	2	23061-070230	PIPE, 7X 230			1					
24	1	124764-44810	LABEL, SUB TANK			1					
25	1	124450-44550	BAND			1					
26	1	129111-44560	PROTECTOR, FAN			1					
27	1	121256-44600	BRACKET, SUB TANK			1					
28	1	171301-49010	PIPE, WATER			1					
29	1	171301-49020	PIPE, WATER			1					
29-1	1	129211-49020	PIPE, WATER			1					N
			(C=E/# 71679)								
30	1	23010-038000	CLAMP, 38			4					
31	1	129150-49100	COCK ASSY, 3-WAY			1					
32	2	129150-49080	COCK, DRAIN			1					
33	1	129111-44590	PROTECTOR			1					
34	1	124764-44800	LABEL, RADIATOR			1					
35	1	121400-44910	LABEL, RADIATOR			1					

Remarks
(A) THIS PART IS ALSO SOLD BY GASKET SET(FIG 56.REF NO.1-1,P/# 729119 -92601).

N:Old ←Yes/No→ New. Q:Old ←No/Yes→ New. R:Old ←Yes/Yes→ New. S:Old ←No/No→ New. W:Add. Z:Discontinued. F:Interchangeable by set. K:Q'ty Change

++ CONTINUE ++

Copyright (C) YANMAR GLOBAL CS CO., LTD. All RightsReserved.

Fig.46. COOLING WATER SYSTEM

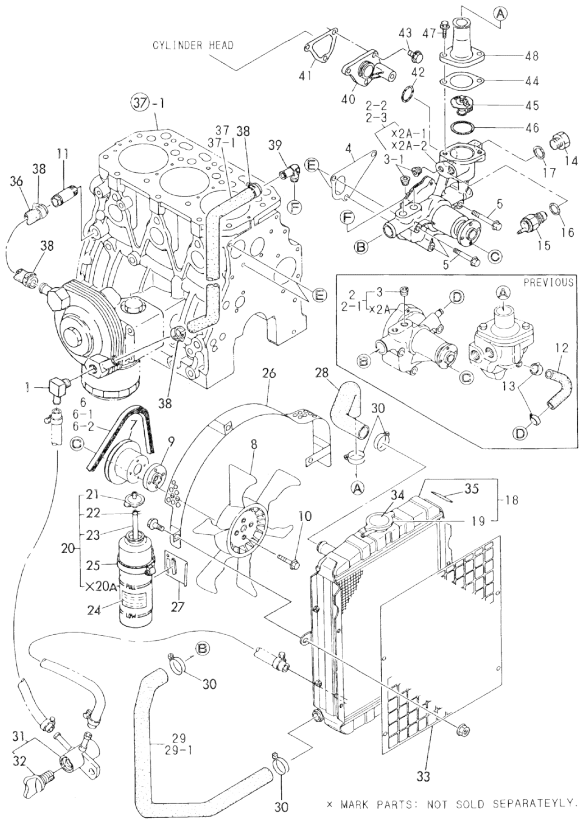

(A)=3TN66E-GB2
(B)=3TNA72E-GB2
(C)=3TN84E-GB2
(D)=4TN84E-GB2
(E)=
(F)=

No.	Lev.	Parts No.	Description	Q'ty (A)	(B)	(C)	(D)	(E)	(F)	I	R
36	1	129403-49031	PIPE, WATER			1					
37	1	129403-49050	PIPE, WATER			1					
37-1	1	129258-49040	PIPE, WATER			1				N	
			(C=E/# 24010)								
38	1	23000-022000	CLAMP, 22			4					
39	1	129103-49301	ELBOW, PT1/4			1				W	
			(C=FROM 1ST)								
40	1	129001-42040	JOINT			1				W	
			(C=E/# 71679)								
41	1	129100-49840	GASKET			1				W	A
			(C=E/# 71679)								
42	1	24321-000300	O-RING, 1AG30.0			1				W	
			(C=E/# 71679)								
43	1	26106-080162	BOLT, M8X 16 PLATED			3				W	
			(C=E/# 71679)								
44	1	129795-49551	GASKET			1				W	A
			(C=E/# 71679)								
45	1	129155-49800	THERMOSTAT, 71			1				W	
			(C=E/# 71679)								
46	1	129150-49811	GASKET, THERMOSTAT			1				W	A
			(C=E/# 71679)								
47	1	26106-080202	BOLT, M8X 20 PLATED			2				W	
			(C=E/# 71679)								
48	1	129350-49560	COVER, THERMOSTAT			1				W	
			(C=E/# 71679)								

Remarks
(A) THIS PART IS ALSO SOLD BY GASKET SET(FIG 56.REF NO.1-1,P/# 729119 -92601).

N:Old ←Yes/No→ New. Q:Old ←No/Yes→ New, R:Old ←Yes/Yes→ New, S:Old ←No/No→ New. W:Add. Z:Discontinued. F:Interchangeable by set. K:Q'ty Change

Copyright (C) YANMAR GLOBAL CS CO., LTD. All RightsReserved.

Fig.47. THERMOSTAT

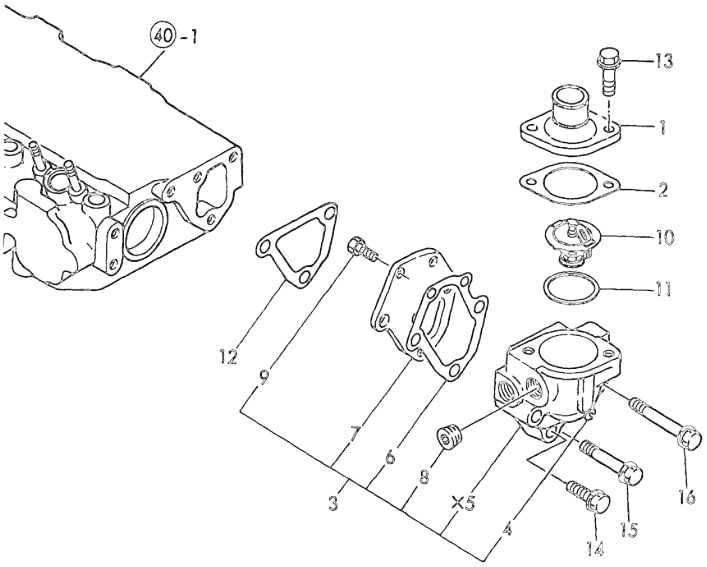

(A)=3TN66E-GB2
(B)=3TNA72E-GB2
(C)=3TN84E-GB2
(D)=4TN84E-GB2
(E)=
(F)=

No.	Lev.	Parts No.	Description	Q'ty (A)	(B)	(C)	(D)	(E)	(F)	I	R
1	1	129350-49530	COVER, THERMOSTAT (C=E/# 71679)			1				Z	
2	1	129795-49550	GASKET			1					
2-1	1	129795-49551	GASKET (C=E/# 28787)			1				N	A
2-2	1	129795-49551	GASKET (C=E/# 71679)			1				Z	
3	1	129100-49800	CASE ASSY,THERMOSTAT (C=E/# 71679)			1				Z	
4	2	124770-11770	JOINT, PIPE PT1/8 (C=E/# 71679)			1				Z	
6	2	129100-49820	GASKET (C=E/# 71679)			1				Z	
7	2	129100-49830	COVER, THERMOSTAT (C=E/# 71679)			1				Z	
8	2	23871-030000	PLUG, R03 (C=E/# 71679)			1				Z	
9	2	26116-060162	BOLT, M6X 16 PLATED (C=E/# 71679)			2				Z	
10	1	129155-49800	THERMOSTAT, 71 (C=E/# 71679)			1				Z	
11	1	129150-49810	GASKET, THERMOSTAT			1					
11-1	1	129150-49811	GASKET, THERMOSTAT (C=E/# 28787)			1				N	A
11-2	1	129150-49811	GASKET, THERMOSTAT (C=E/# 71679)			1				Z	A
12	1	129100-49840	GASKET (C=E/# 71679)			1				Z	A
13	1	26106-080202	BOLT, M8X 20 PLATED (C=E/# 71679)			2				Z	
14	1	26106-080252	BOLT, M8X 25 PLATED (C=E/# 71679)			1				Z	
15	1	26106-080502	BOLT, M8X 50 PLATED (C=E/# 71679)			1				Z	
16	1	26106-080602	BOLT, M8X 60 PLATED (C=E/# 71679)			1				Z	

Remarks
(A) THIS PART IS ALSO SOLD BY GASKET SET(FIG 56.REF NO.1-1,P/# 72919 -92601).

N:Old ←Yes/No→ New. Q:Old ←No/Yes→ New. R:Old ←Yes/Yes→ New. S:Old ←No/No→ New. W:Add. Z:Discontinued. F:Interchangeable by set. K:Q'ty Change

Copyright (C) YANMAR GLOBAL CS CO., LTD. All RightsReserved.

Fig.48. FUEL INJECTION PUMP

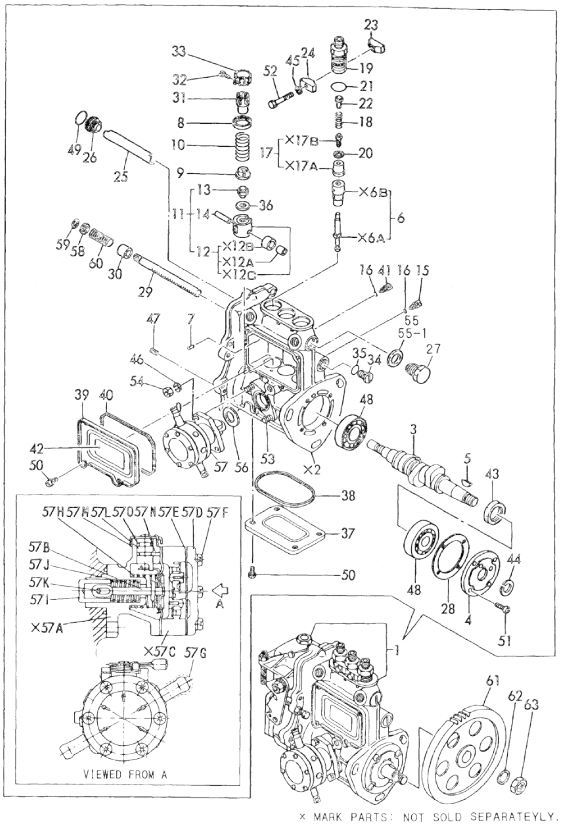

Remarks
(1) GOVERNOR ASSY(FIG.NO.51) IS INCO-
RPORATED IN THIS FUEL INJECTION
PUMP ASSY(REF.NO.1).

(A)=3TN66E-GB2
(B)=3TNA72E-GB2
(C)=3TN84E-GB2
(D)=4TN84E-GB2
(E)=
(F)=

No.	Lev.	Parts No.	Description	Q'ty (A)	(B)	(C)	(D)	(E)	(F)	I	R
1	1	729111-51420	PUMP ASSY, INJECTION			1					1
3	2	119810-51040	CAMSHAFT			1					
4	2	129470-51060	RETAINER, BEARING			1					
5	2	122710-51090	KEY			1					
6	2	129400-51200	PLUNGER ASSY			3					
7	2	129155-51140	PIN			3					
8	2	174307-51170	RETAINER, SPRING A			3					
9	2	129155-51180	RETAINER, SPRING			3					
10	2	124950-51190	SPRING, PLUNGER			3					
11	2	129155-51200	TAPPET ASSY			3					
12	3	711100-51540	ROLLER ASSY			3					
13	3	129155-51250	BOLT, ADJUSTING			3					
14	3	174100-54120	PIN			3					
15	2	129155-51270	STOPPER, TAPPET			3					
16	2	129155-51280	O-RING, S6			3					
17	2	128170-51300	VALVE ASSY, DELIVERY			3					
18	2	129155-51320	SPRING, DELIVERY			3					
19	2	129155-51340	RETAINER			3					
20	2	124550-51350	GASKET, DELIVERY			3					
21	2	124550-51370	O-RING			3					
22	2	129155-51370	STOPPER, VALVE			3					
23	2	129155-51380	STOPPER			2					
24	2	129155-51390	STOPPER			2					
25	2	129155-51400	DEFLECTOR			1					
26	2	129155-51410	BOLT			1					
27	2	129155-51420	PLUG, M16			1					
28	2	129155-51450	SHIM SET, ADJUSTING			1					
29	2	129155-51500	RACK, CONTROL			1					
30	2	129155-51521	BUSH, RACK			1					
31	2	129155-51550	PINION, CONTROL			3					
32	2	122117-51560	SCREW			3					
33	2	174307-51560	PINION			3					
34	2	129155-51570	PLUG, M12			1					
35	2	129155-51580	O-RING			1					
36	2	129155-51600	SHIM SET, ADJUSTING			3					
37	2	129155-51700	COVER			1					
38	2	129155-51710	GASKET			1					
39	2	129155-51750	COVER			1					
40	2	129155-51760	GASKET			1					
41	2	129155-51790	STOOPER, RACK			1					
42	2	129156-51910	LABEL, CAUTION			1					
43	2	129470-51080	SEAL, AF0741F0			1					
44	2	22287-120000	WASHER, 12			1					
45	2	22217-050000	WASHER, SPRING 5			2					
46	2	22217-060000	WASHER, SPRING 6			2					
47	2	22351-050010	PIN, SPRING 5.0X10			2					
48	2	122710-51050	BEARING, HR30203J			2					
49	2	24341-000160	O-RING, 1AS16.0			1					
50	2	26022-050102	SCREW, M5X10			8					
51	2	26022-060162	SCREW, M6X16			4					
52	2	26116-050302	BOLT, M5X 30 PLATED			2					

N:Old ←Yes/No→ New. Q:Old ←No/Yes→ New. R:Old ←Yes/Yes→ New. S:Old ←No/No→ New. W:Add. Z:Discontinued. F:Interchangeable by set. K:Q'ty Change

++ CONTINUE ++

Copyright (C) YANMAR GLOBAL CS CO., LTD. All RightsReserved.

Fig.48. FUEL INJECTION PUMP

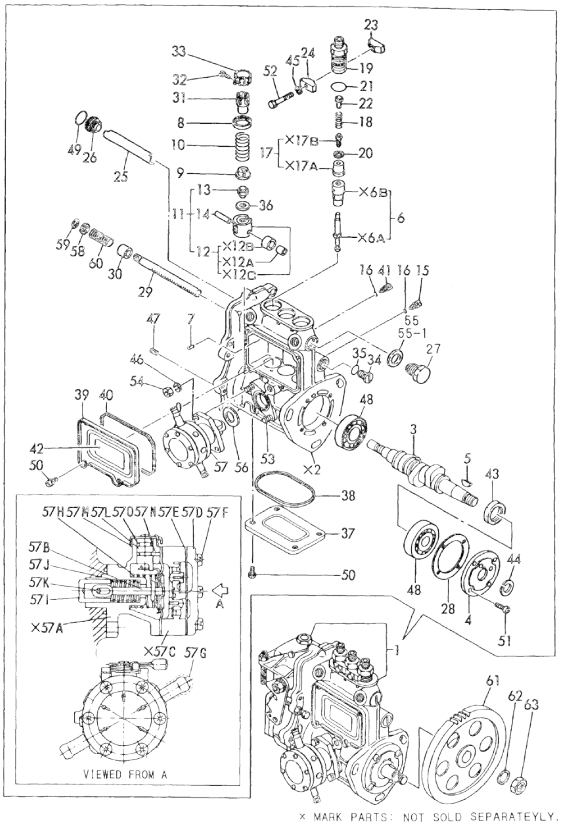

Remarks
(1) GOVERNOR ASSY(FIG.NO.51) IS INCO-
RPORATED IN THIS FUEL INJECTION
PUMP ASSY(REF.NO.1).

(A)=3TN66E-GB2
(B)=3TNA72E-GB2
(C)=3TN84E-GB2
(D)=4TN84E-GB2
(E)=
(F)=

No.	Lev.	Parts No.	Description	Q'ty (A)	(B)	(C)	(D)	(E)	(F)	I	R
53	2	129155-51020	STUD			2					
54	2	26716-060002	NUT, M6			2					
55	2	43400-500490	SEAL WASHER 16S			1					
55-1	2	22190-160002	WASHER, SEAL 16 (C=E/# 60897)			1				N	
56	2	129155-52050	GASKET			1					
57	2	129100-52100	PUMP ASSY, FUEL FEED			1					
57B	3	129158-52020	DIAPHRAGM			1					
57D	3	129158-52060	COVER			1					
57E	3	129158-52070	GASKET			1					
57F	3	129158-52080	SCREW			6					
57G	3	129158-52090	CAP			2					
57H	3	129158-52160	SPRING			1					
57I	3	129158-52250	TAPPET			1					
57J	3	129158-52260	SPRING			1					
57K	3	129158-52270	PIN			1					
57L	3	129158-52350	LEVER			1					
57M	3	129158-52360	SPRING, RETURN			1					
57N	3	129158-52370	PIN			1					
57O	3	129158-52380	O-RING			1					
58	2	129155-51530	SPACER			1					
59	2	129155-51540	CIRCLIP			1					
60	2	129155-51591	SPRING, RACK			1					
61	1	129100-25900	GEAR, PUMP			1					
62	1	22217-120000	WASHER, SPRING 12			1					
63	1	26716-120002	NUT, M12			1					

N:Old ←Yes/No→ New. Q:Old ←No/Yes→ New. R:Old ←Yes/Yes→ New. S:Old ←No/No→ New. W:Add. Z:Discontinued. F:Interchangeable by set. K:Q'ty Change

Copyright (C) YANMAR GLOBAL CS CO., LTD. All RightsReserved.

Fig.49. FUEL INJECTION PIPE

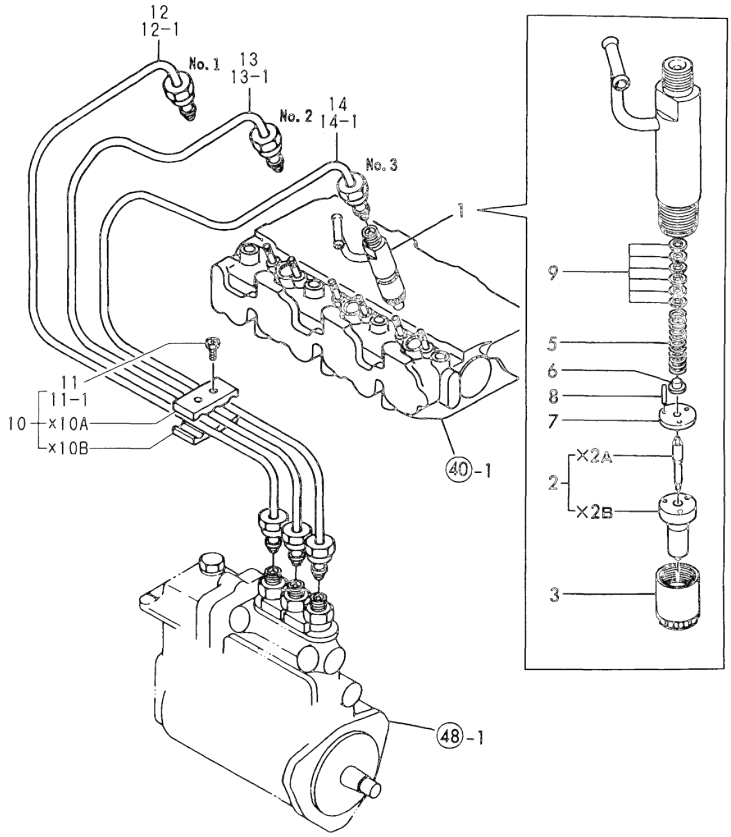

(A)=3TN66E-GB2
(B)=3TNA72E-GB2
(C)=3TN84E-GB2
(D)=4TN84E-GB2
(E)=
(F)=

No.	Lev.	Parts No.	Description	Q'ty (A)	(B)	(C)	(D)	(E)	(F)	I	R
1	1	729100-53100	VALVE ASSY,INJECTION			3					
2	2	129100-53000	VALVE ASSY,INJECTION			3					
3	2	114250-53080	NUT, NOZZLE D16.95			3					
5	2	114250-53120	SPRING, NOZZLE			3					
6	2	114250-53130	SEAT, SPRING			3					
7	2	114250-53140	PLATE			3					
8	2	114250-53210	PIN			6					
9	2	114250-53400	SHIM SET			3					
10	1	129150-59120	RETAINER, PIPE			1					
11	2	129150-59130	BOLT, M4X12			2					
11-1	2	129150-59131	BOLT, M4X14 (C=E/# 62584)			2					N
12	1	129100-59810	PIPE ASSY, INJECTION			1					
12-1	1	129100-59811	PIPE ASSY, INJECTION (C=E/# 67236)			1					N
13	1	129100-59820	PIPE ASSY, INJECTION			1					
13-1	1	129100-59821	PIPE ASSY, INJECTION (C=E/# 67236)			1					N
14	1	129100-59830	PIPE ASSY, INJECTION			1					
14-1	1	129100-59831	PIPE ASSY, INJECTION (C=E/# 67236)			1					N

N:Old ←Yes/No→ New. Q:Old ←No/Yes→ New. R:Old ←Yes/Yes→ New. S:Old ←No/No→ New. W:Add. Z:Discontinued. F:Interchangeable by set. K:Q'ty Change

Copyright (C) YANMAR GLOBAL CS CO., LTD. All RightsReserved.

Fig.50. FUEL PIPE

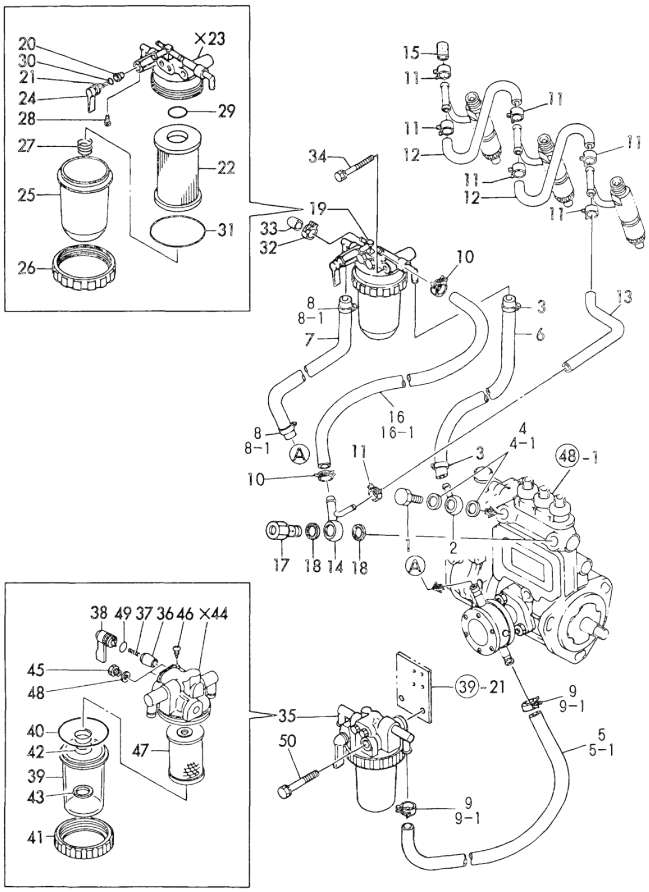

(A)=3TN66E-GB2
(B)=3TNA72E-GB2
(C)=3TN84E-GB2
(D)=4TN84E-GB2
(E)=
(F)=

No.	Lev.	Parts No.	Description	Q'ty (A)	(B)	(C)	(D)	(E)	(F)	I	R
1	1	103854-39140	BOLT, PIPE JOINT			1					
2	1	101304-59020	JOINT, PIPE 12			1					
3	1	124766-59050	CLIP, HOSE 12			2					
4	1	104200-59170	GASKET, 12			2					
4-1	1	22190-120002	WASHER, SEAL 12 (C=E/# 71368)			2				N	
5	1	105225-59511	PIPE, FUEL			1					
5-1	1	105025-59510	PIPE, FUEL (C=FROM 1ST)			1				N	
6	1	129555-59510	PIPE, D13/7.5X180			1					
7	1	129255-59580	PIPE, FUEL			1					
8	1	23000-013000	CLAMP, 13			2					
8-1	1	124766-59050	CLIP, HOSE 12 (C=E/# 33828)			2				N	
9	1	23000-013000	CLAMP, 13			2					
9-1	1	124766-59050	CLIP, HOSE 12 (C=E/# 33828)			2				N	
10	1	124766-59050	CLIP, HOSE 12			2					
11	1	124066-59100	CLIP, HOSE 8			7					
12	1	121250-59550	PIPE, FUEL D8X120			2					
13	1	119840-59560	PIPE, FUEL RETURN			1					
14	1	119840-59570	JOINT			1					
15	1	129150-59580	CAP			1					
16	1	129255-59580	PIPE, FUEL			1					
16-1	1	105025-59750	PIPE, FUEL (C=E/# 32859)			1				N	
17	1	129100-59951	VALVE ASSY, CHECK			1					
18	1	23414-120000	GASKET, 12X1.0			2					
19	1	129100-55621	FILTER ASSY, FUEL			1					
20	2	104200-55321	VALVE, TAPER			1					
21	2	104200-55330	SPRING, VALVE			1					
22	2	129100-55650	ELEMENT			1					
24	2	129100-55670	LEVER			1					
25	2	129100-55680	CUP, STRAINER			1					
26	2	129100-55690	RING, RETAINING			1					
27	2	129100-55700	SPRING			1					
28	2	104200-55750	SCREW, M4			1					
29	2	24311-000160	O-RING, 1AP16.0			1					
30	2	24311-240100	O-RING, 1AP10A			1					
31	2	24321-000650	O-RING, 1AG65.0			1					
32	1	124066-59100	CLIP, HOSE 8			1					
33	1	129150-59580	CAP			1					
34	1	26014-080702	BOLT, M8X 70			1					
35	1	129335-55700	SEPARATOR ASSY,WATER			1					
36	2	104200-55321	VALVE, TAPER			1					
37	2	104200-55330	SPRING, VALVE			1					
38	2	104200-55341	HANDLE			1					
39	2	124064-55510	COVER			1					
40	2	102103-55520	O-RING			1					
41	2	110250-55610	RING, RETAINING			1					
42	2	121257-55720	SPRING			1					

N:Old ←Yes/No→ New. Q:Old ←No/Yes→ New. R:Old ←Yes/Yes→ New. S:Old ←No/No→ New. W:Add. Z:Discontinued. F:Interchangeable by set. K:Q'ty Change

++ CONTINUE ++

Copyright (C) YANMAR GLOBAL CS CO., LTD. All RightsReserved.

Fig.50. FUEL PIPE

(A)=3TN66E-GB2
(B)=3TNA72E-GB2
(C)=3TN84E-GB2
(D)=4TN84E-GB2
(E)=
(F)=

No.	Lev.	Parts No.	Description	Q'ty (A)	(B)	(C)	(D)	(E)	(F)	I	R
43	2	121257-55731	FLOAT			1					
45	2	101720-55750	PLUG, 6			2					
46	2	104200-55750	SCREW, M4			1					
47	2	171081-55910	SCREEN			1					
48	2	23418-060000	GASKET, 6X1.0			2					
49	2	24311-240100	O-RING, 1AP10A			1					
50	1	26014-080702	BOLT, M8X 70			1					

N:Old ←Yes/No→ New. Q:Old ←No/Yes→ New. R:Old ←Yes/Yes→ New. S:Old ←No/No→ New. W:Add. Z:Discontinued. F:Interchangeable by set. K:Q'ty Change

Copyright (C) YANMAR GLOBAL CS CO., LTD. All RightsReserved.

Fig.51. GOVERNOR

(A)=3TN66E-GB2
(B)=3TNA72E-GB2
(C)=3TN84E-GB2
(D)=4TN84E-GB2
(E)=
(F)=

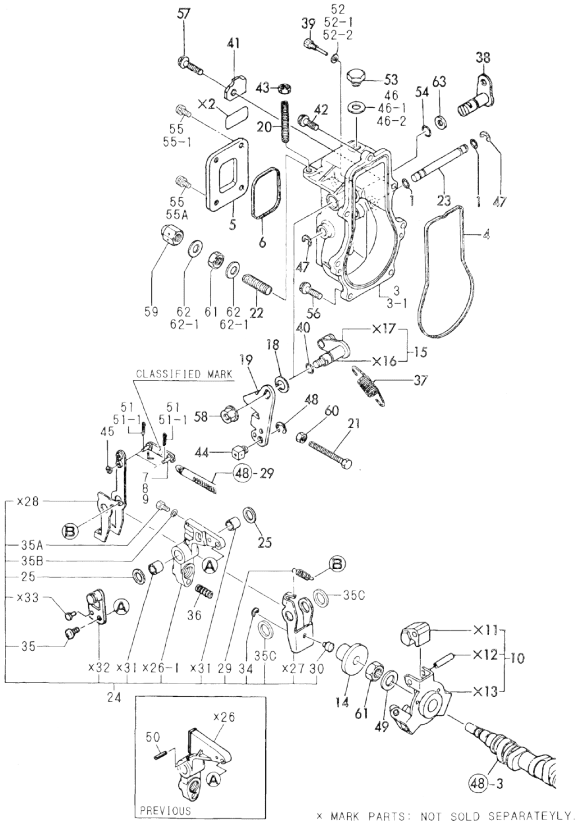

No.	Lev.	Parts No.	Description	Q'ty (A)	(B)	(C)	(D)	(E)	(F)	I	R
1	1	129155-51280	O-RING, S6			2					
3	1	119843-61011	CASE, GOVERNOR			1					
3-1	1	129155-61012	CASE, GOVERNOR			1				N	
			(C=E/# 45265)								
4	1	129155-61050	GASKET			1					2
5	1	129155-61060	COVER, GOVERNOR CASE			1					
6	1	129155-61070	GASKET			1					
7	1	129155-61120	LINK, L=30 MARK 0			1					1
8	1	129155-61130	LINK, L=31 MARK 1			1					1
9	1	129155-61140	LINK, L=30.5 MARK 05			1					1
10	1	129155-61201	WEIGHT ASSY,GOVERNOR			1					
14	1	129155-61341	SLEEVE			1					
15	1	129100-61400	SHAFT ASSY			1					
18	1	129155-61430	SPACER			1					
19	1	129100-61440	LEVER, CONTROL			1					
20	1	129155-61450	BOLT, LIMITER			1					
21	1	129155-61460	BOLT, IDLE			1					
22	1	129155-61470	BOLT, CONTROL			1					
23	1	129155-61490	SHAFT			1					
24	1	129116-61500	LEVER ASSY, GOVERNOR			1					
25	2	174307-51700	SHIM SET			2					
29	2	119843-61540	SPRING, SET			1					
30	2	129155-61540	SHIFTER			1					
34	2	22272-000040	RING, E- 4			1					
35	2	26022-060122	SCREW, M6X12			1					
35A	2	26113-050082	BOLT, M5X 8			1				W	
			(C=E/# 48805)								
35B	2	22217-050000	WASHER, SPRING 5			1				W	
			(C=E/# 48805)								
35C	2	129155-61480	SPACER ASSY			2				W	
			(C=EXXX)								
36	1	129500-61650	SPRING, FUEL CONTROL			1					
37	1	129500-61700	SPRING, GOVERNOR			1					
38	1	129116-61803	LEVER, STOP			1					
39	1	129155-61810	PIN			1					
40	1	129155-61830	O-RING, S10			1					
41	1	129116-61890	SUPPORT			1					
42	1	129155-61950	BOLT			1					
43	1	124550-66370	NUT, M6			1					
44	1	124756-67510	RETAINER			1					
45	1	22117-040000	WASHER, 4			1					
46	1	22190-100000	WASHER, SEAL 10			1					
46-1	1	43400-500430	SEAL WASHER 10S			1				R	
			(C=E/# 21241)								
46-2	1	22190-100002	WASHER, SEAL 10			1				N	
			(C=E/# 60897)								
47	1	22272-000060	RING, E- 6			2					
48	1	22272-000070	RING, E- 7			1					
49	1	22287-120000	WASHER, 12			1				Z	
			(C=EXXX)								
50	1	22351-030016	PIN, SPRING 3.0X16			1				Z	

N:Old ←Yes/No→ New. Q:Old ←No/Yes→ New. R:Old ←Yes/Yes→ New. S:Old ←No/No→ New. W:Add. Z:Discontinued. F:Interchangeable by set. K:Q'ty Change

Remarks
(1) SELECTIVE PARTS:CERTAIN THE CLASSIFICATION MARK, THEN PLACE YOUR ORDER. (ILLUSTRATION)

++ CONTINUE ++

Copyright (C) YANMAR GLOBAL CS CO., LTD. All RightsReserved.

Fig.51. GOVERNOR

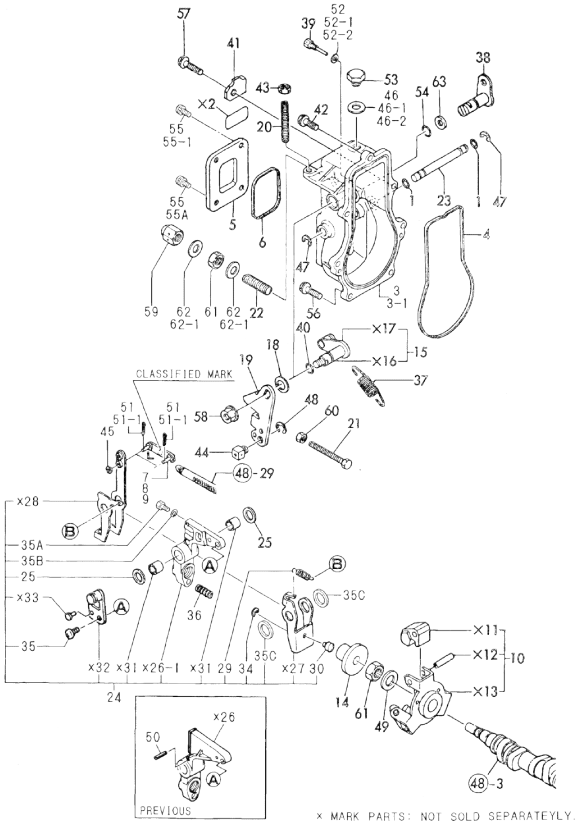

Remarks
(1) SELECTIVE PARTS:CERTAIN THE CLASSIFICATION MARK, THEN PLACE YOUR ORDER. (ILLUSTRATION)

(A)=3TN66E-GB2
(B)=3TNA72E-GB2
(C)=3TN84E-GB2
(D)=4TN84E-GB2
(E)=
(F)=

No.	Lev.	Parts No.	Description	Q'ty (A)	(B)	(C)	(D)	(E)	(F)	I	R
			(C=EXXX)								
51	1	22360-040000	PIN, SNAP 4			2					
51-1	1	22372-040000	PIN, SNAP 4			2					R
			(C=E/# 35059)								
52	1	23414-050000	GASKET, 5X1.0			1					
52-1	1	43400-500390	SEAL WASHER 6S			1					N
			(C=E/# 18166)								
52-2	1	22190-060002	WASHER, SEAL 6			1					N
			(C=E/# 60897)								
53	1	23887-100002	PLUG, 10			1					
54	1	24311-240100	O-RING, 1AP10A			1					
55	1	26022-050102	SCREW, M5X10			4					
55-1	1	26022-050102	SCREW, M5X10			2					K
			(C=E/# 59430)								
55A	1	26023-050102	SCREW, M5X10			2					W
			(C=E/# 59430)								
56	1	26106-060202	BOLT, M6X 20 PLATED			5					
57	1	26106-060252	BOLT, M6X 25 PLATED			1					
58	1	26366-080002	NUT, M8			1					
59	1	26687-120002	NUT, CAP M12			1					
60	1	26756-060002	NUT, LOCK M6			1					
61	1	26776-120002	NUT, LOCK M12			2					
62	1	43400-500450	SEAL WASHER 12S			2					
62-1	1	22190-120002	WASHER, SEAL 12			2					N
			(C=E/# 60897)								
63	1	131110-66420	WASHER			1					W
			(C=EXXX)								

N:Old ←Yes/No→ New. Q:Old ←No/Yes→ New. R:Old ←Yes/Yes→ New. S:Old ←No/No→ New. W:Add. Z:Discontinued. F:Interchangeable by set. K:Q'ty Change

Copyright (C) YANMAR GLOBAL CS CO., LTD. All RightsReserved.

Fig.52. ENGINE STOP DEVICE

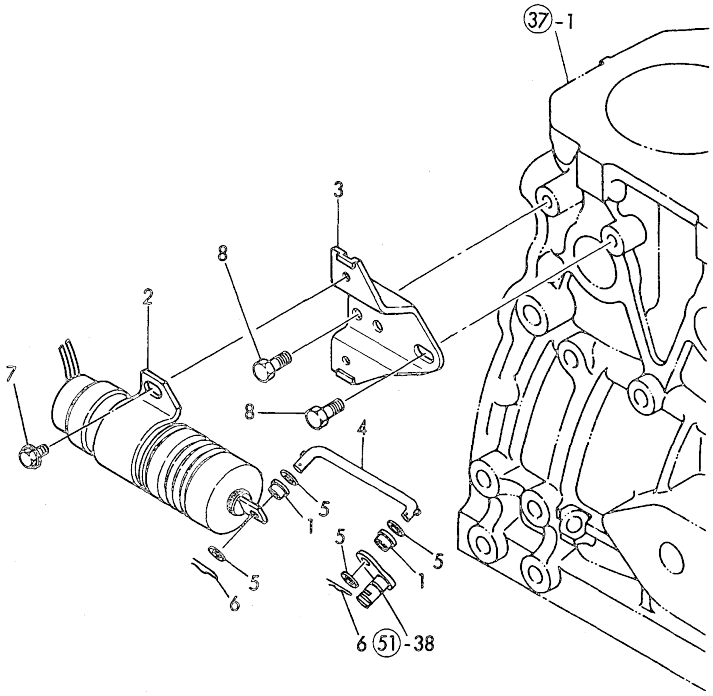

(A)=3TN66E-GB2
(B)=3TNA72E-GB2
(C)=3TN84E-GB2
(D)=4TN84E-GB2
(E)=
(F)=

No.	Lev.	Parts No.	Description	Q'ty (A)	(B)	(C)	(D)	(E)	(F)	I	R
1	1	119245-66400	BUSH			2					
2	1	129155-66800	SOLENOID			1					
3	1	129155-66811	BRACKET, SOLENOID			1					
4	1	129155-66822	LINK, SOLENOID			1					
5	1	22137-040000	WASHER, 4			4					
6	1	22360-040000	PIN, SNAP 4			2					
7	1	26106-060102	BOLT, M6X 10 PLATED			2					
8	1	26116-080122	BOLT, M8X 12 PLATED			2					

N:Old ←Yes/No→ New. Q:Old ←No/Yes→ New. R:Old ←Yes/Yes→ New. S:Old ←No/No→ New. W:Add. Z:Discontinued. F:Interchangeable by set. K:Q'ty Change

Copyright (C) YANMAR GLOBAL CS CO., LTD. All RightsReserved.

Fig.53. STARTING MOTOR

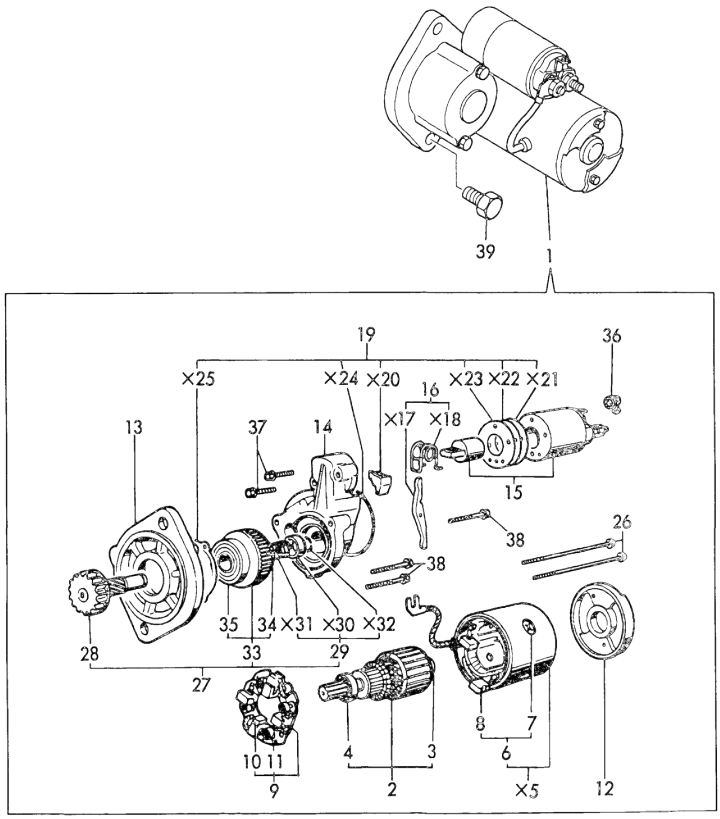

(A)=3TN66E-GB2
(B)=3TNA72E-GB2
(C)=3TN84E-GB2
(D)=4TN84E-GB2
(E)=
(F)=

No.	Lev.	Parts No.	Description	Q'ty (A)	(B)	(C)	(D)	(E)	(F)	I	R
1	1	171008-77010	STARTER, S114-483			1					
2	2	171008-77400	ARMATURE ASSY			1					
3	3	171008-77410	BEARING			1					
4	3	171008-77420	BEARING			1					
6	3	171008-77440	COIL ASSY, FIELD			1					
7	4	171008-77450	SCREW			4					
8	4	171008-77460	BRUSH (+)			2					
9	2	171008-77470	HOLDER ASSY, BRUSH			1					
10	3	171008-77480	BRUSH (-)			2					
11	3	171008-77490	SPRING, BRUSH			4					
12	2	171008-77500	COVER, REAR			1					
13	2	171008-77510	CASE, GEAR			1					
14	2	171008-77520	HOUSING, CENTER			1					
15	2	171008-77530	SWITCH, MAGNETIC			1					
16	2	171008-77540	LEVER SET			1					
19	2	171008-77570	COVER KIT, DUST			1					
19-1	2	171008-77571	COVER KIT, DUST (C=E/# 28787)			1				N	
26	2	171008-77640	BOLT, THROUGH			2					
27	2	171008-77650	PINION ASSY			1					
28	3	171008-77660	SHAFT			1					
29	3	171008-77670	STOPPER SET			1					
33	3	171008-77720	CLUTCH ASSY			1					
34	4	171008-77730	BEARING, BALL			1					
35	4	171008-77740	BEARING			1					
36	2	171008-77750	COVER			1					
37	2	26106-060322	BOLT, M6X 32 PLATED			2					
38	2	26106-060402	BOLT, M6X 40 PLATED			3					
39	1	26116-120252	BOLT, M12X 25 PLATED			2					

N:Old ←Yes/No→ New. Q:Old ←No/Yes→ New. R:Old ←Yes/Yes→ New. S:Old ←No/No→ New. W:Add. Z:Discontinued. F:Interchangeable by set. K:Q'ty Change

Copyright (C) YANMAR GLOBAL CS CO., LTD. All RightsReserved.

Fig.54. GENERATOR

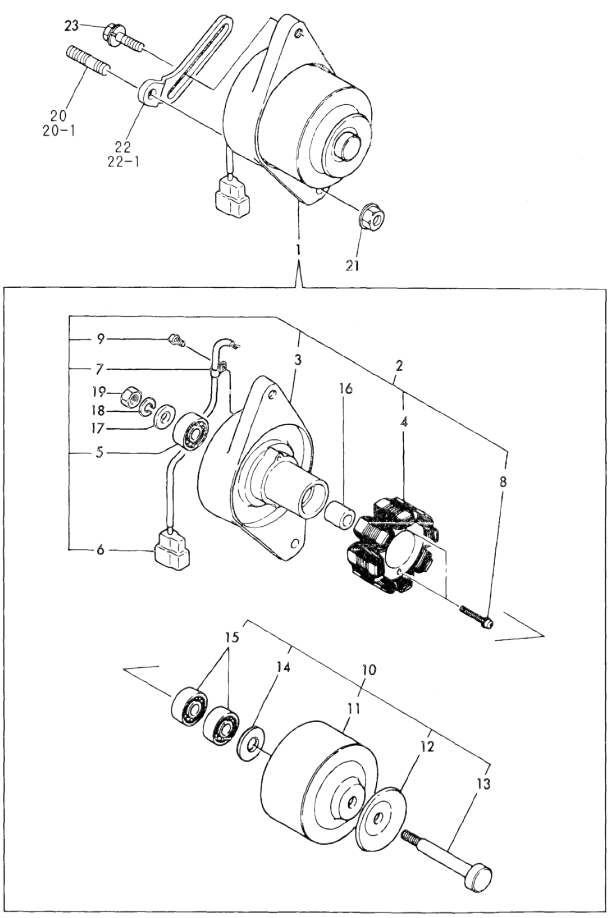

(A)=3TN66E-GB2
(B)=3TNA72E-GB2
(C)=3TN84E-GB2
(D)=4TN84E-GB2
(E)=
(F)=

No.	Lev.	Parts No.	Description	Q'ty (A)	(B)	(C)	(D)	(E)	(F)	I	R
1	1	171301-77201	DYNAMO ASSY, 15A			1					
2	2	XM08137	PLATE ASSY			1					
3	3	XM08138	PLATE			1					
4	3	XM08180	STATOR SET			1					
5	3	XM27436	BEARING, BALL			1					
6	3	XM17878	COUPLER			1					
7	3	XM36410	CLAMP			1					
8	3	26022-040252	SCREW, M4X25			2					
9	3	XYSPS4008	SCREW			1					
10	2	XM82184	FLYWHEEL ASSY			1					
11	3	XM82110	FLYWHEEL			1					
12	3	XM72174	PULLEY			1					
13	3	XM72664	SHAFT			1					
14	3	XM37336	WASHER			1					
15	3	XM27436	BEARING, BALL			2					
16	2	106383-44720	SPACER			1					
17	2	106383-44730	WASHER			1					
18	2	22212-100000	SPRING WASHER 10			1					
19	2	26716-100002	NUT, M10			1					
20	1	121450-01570	STUD			1					
20-1	1	129795-01900	STUD			1				N	
			(C=E/# 70664)								
21	1	26366-100002	NUT, M10			1					
22	1	129400-77330	ADJUSTER			1					
22-1	1	129410-77330	ADJUSTER			1				N	
			(C=E/# 71679)								
23	1	26014-080252	BOLT, M8X 25			1					

N:Old ◄Yes/No► New. Q:Old ◄No/Yes► New. R:Old ◄Yes/Yes► New. S:Old ◄No/No► New. W:Add. Z:Discontinued. F:Interchangeable by set. K:Q'ty Change

Copyright (C) YANMAR GLOBAL CS CO., LTD. All RightsReserved.

Fig.55. ELECTRIC PART

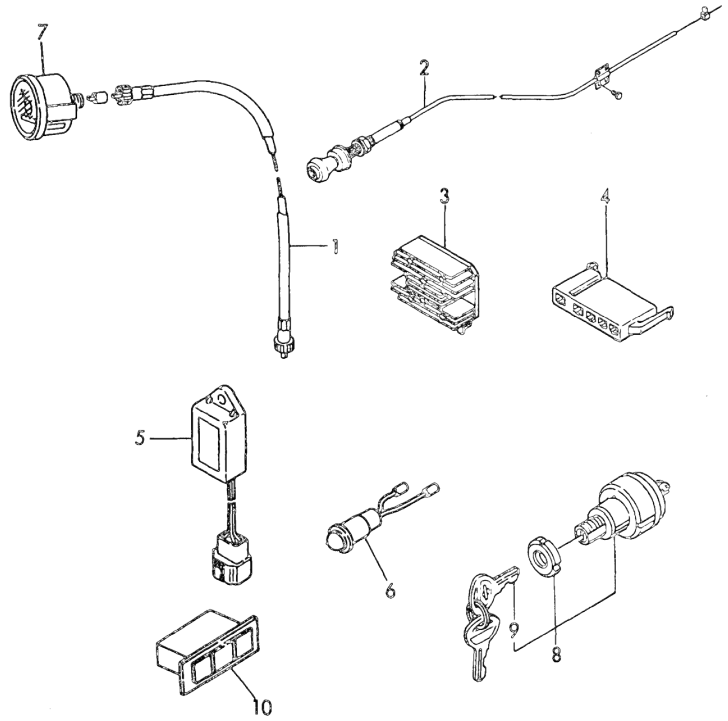

(A)=3TN66E-GB2
(B)=3TNA72E-GB2
(C)=3TN84E-GB2
(D)=4TN84E-GB2
(E)=
(F)=

No.	Lev.	Parts No.	Description	Q'ty (A)	(B)	(C)	(D)	(E)	(F)	I	R
1	1	194145-56901	CABLE ASSY, METER			1					
2	1	170022-67100	CABLE, PUSH-PULL			1					
3	1	119660-77710	LIMITER, CURRENT 15A			1					
4	1	171301-77720	COUPLER			1					
5	1	128300-77920	TIMER			1					
6	1	124732-77970	LAMP, PILOT			1					
7	1	171080-91100	TACHOMETER			1					
8	1	121400-91251	SWITCH, STARTER			1					
9	2	121400-91271	KEY, SWITCH			2					
10	1	170038-91310	LAMP			1					

N:Old ←Yes/No→ New. Q:Old ←No/Yes→ New, R:Old ←Yes/Yes→ New, S:Old ←No/No→ New. W:Add. Z:Discontinued. F:Interchangeable by set. K:Q'ty Change

Copyright (C) YANMAR GLOBAL CS CO., LTD. All RightsReserved.

Fig.56. GASKET SET(OPTIONAL) & TOOL

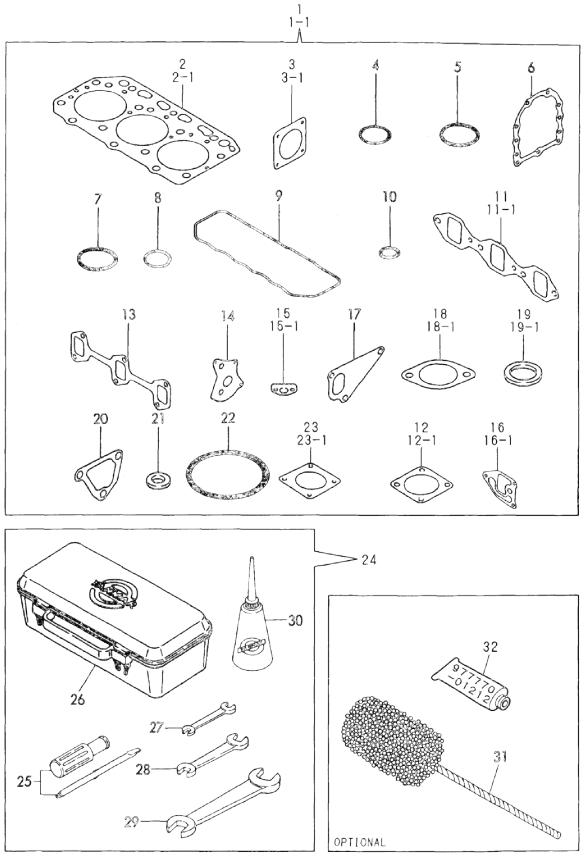

No.	Lev.	Parts No.	Description	Q'ty (A)	(B)	(C)	(D)	(E)	(F)	I	R
				(A)=3TN66E-GB2 (B)=3TNA72E-GB2 (C)=3TN84E-GB2			(D)=4TN84E-GB2 (E)= (F)=				
1	1	729119-92600	GASKET SET			1					1
1-1	1	729119-92601	GASKET SET			1				N	1
			(C=E/# 28787)								
2	2	129157-01332	GASKET, HEAD			1					
2-1	2	129157-01333	GASKET, HEAD			1				R	
			(C=E/# 61243)								
3	2	124240-01882	GASKET			1					
3-1	2	124240-01883	GASKET			1				N	
			(C=E/# 24010)								
4	2	121850-51960	O-RING			1					
5	2	24311-000320	O-RING, 1AP32.0			1					
6	2	129150-01660	GASKET			1				Z	
			(C=EXXX)								
7	2	24341-000500	O-RING, 1AS50.0			1					
8	2	24311-000320	O-RING, 1AP32.0			1					
9	2	129150-11310	GASKET, BONNET			1					
10	2	24311-000120	O-RING, 1AP12.0			3					
11	2	129150-12110	GASKET, MANIFOLD			1					
11-1	2	129150-12111	GASKET, MANIFOLD			1				N	
			(C=E/# 28787)								
12	2	124701-11910	GASKET, SILENCER			1					
12-1	2	124701-11911	GASKET, SILENCER			1				N	
			(C=E/# 28787)								
13	2	129150-13110	GASKET			1					
14	2	129150-32020	GASKET, PUMP			1					
15	2	129150-35040	GASKET			1					
15-1	2	129150-35041	GASKET			1				N	
			(C=E/# 28787)								
16	2	129103-35121	GASKET			1					
16-1	2	129103-35122	GASKET			1				N	
			(C=E/# 28787)								
17	2	129100-42020	GASKET, WATER PUMP			1					
18	2	129795-49550	GASKET			1					
18-1	2	129795-49551	GASKET			1				N	
			(C=E/# 28787)								
19	2	129150-49810	GASKET, THERMOSTAT			1					
19-1	2	129150-49811	GASKET, THERMOSTAT			1				N	
			(C=E/# 28787)								
20	2	129100-49840	GASKET			1					
21	2	124465-44950	GASKET, 16			2					
22	2	24321-000650	O-RING, 1AG65.0			1					
23	2	129150-77510	GASKET			1					
23-1	2	129150-77511	GASKET			1				N	
			(C=E/# 28787)								
24	1	171001-93100	BOX, TOOL			1					
25	2	104200-92350	DRIVER, SCREW			1					
26	2	104200-92600	BOX, TOOL			1					
27	2	28110-100120	SPANNER, 10X12			1					
28	2	28110-140170	SPANNER, 14X17			1					
29	2	28110-190220	SPANNER, 19X22			1					
30	2	28210-000140	OILER			1					

Remarks
(1) OPTIONAL PART.

N:Old ←Yes/No→ New. Q:Old ←No/Yes→ New. R:Old ←Yes/Yes→ New. S:Old ←No/No→ New. W:Add. Z:Discontinued. F:Interchangeable by set. K:Q'ty Change

++ CONTINUE ++

Copyright (C) YANMAR GLOBAL CS CO., LTD. All RightsReserved.

Fig.56. GASKET SET(OPTIONAL) & TOOL

(A)=3TN66E-GB2
(B)=3TNA72E-GB2
(C)=3TN84E-GB2
(D)=4TN84E-GB2
(E)=
(F)=

No.	Lev.	Parts No.	Description	Q'ty (A)	(B)	(C)	(D)	(E)	(F)	I	R
31	1	129400-92420	HONE			1					1
32	1	977770-01212	GASKET, LIQUID			1					1

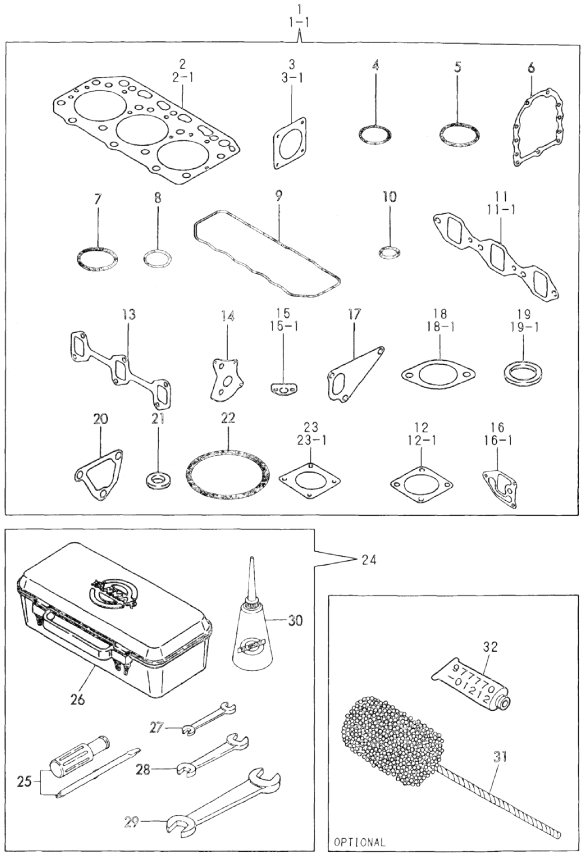

Remarks
(1) OPTIONAL PART.

N:Old ←Yes/No→ New. Q:Old ←No/Yes→ New, R:Old ←Yes/Yes→ New. S:Old ←No/No→ New. W:Add. Z:Discontinued. F:Interchangeable by set. K:Q'ty Change

Copyright (C) YANMAR GLOBAL CS CO., LTD. All RightsReserved.

Fig.57. CYLINDER BLOCK

(A)=3TN66E-GB2
(B)=3TNA72E-GB2
(C)=3TN84E-GB2
(D)=4TN84E-GB2
(E)=
(F)=

No.	Lev.	Parts No.	Description	Q'ty (A)	(B)	(C)	(D)	(E)	(F)	I	R
1	1	729405-01560	BLOCK ASSY, CYLINDER				1				
4	3	124160-01910	PLUG, PT1/4				2				
5	3	124160-01910	PLUG, PT1/4				1				
6	3	171051-01921	PLUG, NPTF1				1				
7	3	23871-010000	PLUG, R01				1				
8	3	27231-500000	PLUG 50				1				
9	3	27241-120000	PLUG, 12				2				
10	3	27241-300000	PLUG 30				8				
11	2	23871-030000	PLUG, R03				1				
12	2	129150-02020	BOLT, METAL CAP				10				
13	2	129150-02800	BEARING, MAIN				5				
14	2	129150-02930	BEARING, THRUST				2				
15	2	129795-02411	BUSH, CAMSHAFT				1				
16	1	129150-02450	BEARING, THRUST				1				
17	1	26106-080162	BOLT, M8X 16 PLATED				2				
17-1	1	26106-080142	BOLT, M8X 14 PLATED				2			N	
			(D=E/# 25284)								
18	1	129150-01200	BOLT, HEAD				18				
19	1	129405-01330	GASKET, HEAD				1				
19-1	1	129405-01331	GASKET, HEAD				1			R	A
			(D=E/# 20647)								
20	1	129150-02870	BEARING, 0.25 US				5				1
21	1	129150-02940	BEARING, THRUST 0.25				1				2

Remarks
(1) UNDER-SIZE(U.S.=0.25)PART.
(2) OVER-SIZE(O.S.=0.25)PART.
(A) THIS PART IS ALSO SOLD BY GASKET SET(FIG 76.REF NO.1-1,P/# 729419 -92601).

N:Old ←Yes/No→ New. Q:Old ←No/Yes→ New. R:Old ←Yes/Yes→ New. S:Old ←No/No→ New. W:Add. Z:Discontinued. F:Interchangeable by set. K:Q'ty Change

Copyright (C) YANMAR GLOBAL CS CO., LTD. All RightsReserved.

Fig.58. GEAR HOUSING

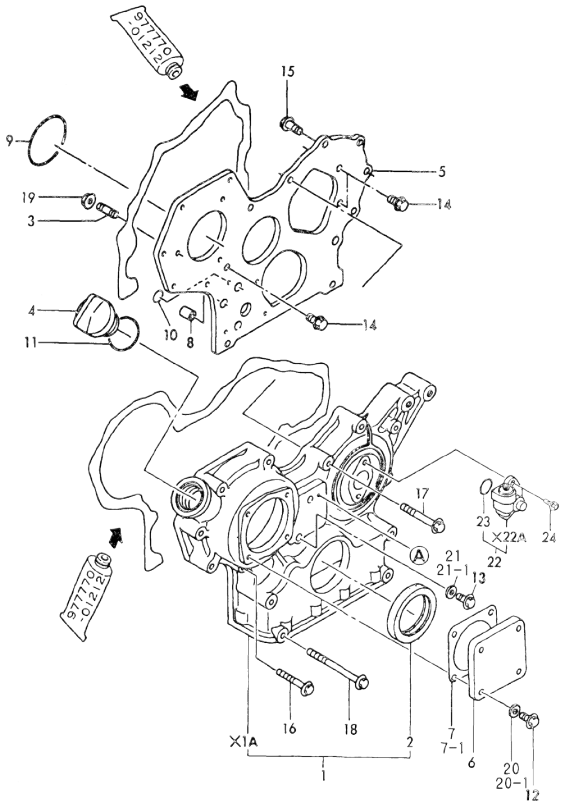

(A)=3TN66E-GB2
(B)=3TNA72E-GB2
(C)=3TN84E-GB2
(D)=4TN84E-GB2
(E)=
(F)=

No.	Lev.	Parts No.	Description	Q'ty (A)	(B)	(C)	(D)	(E)	(F)	I	R
1	1	719810-01500	CASE ASSY, GEAR				1				
2	2	129795-01800	SEAL, OIL				1				
3	1	121450-01560	STUD, M8X22				3				
4	1	124160-01751	COVER, FILLER				1				
5	1	129400-01520	FLANGE, GEAR CASE				1				
6	1	124240-01871	COVER				1				
7	1	124240-01882	GASKET				1				
7-1	1	124240-01883	GASKET (D=E/# 02047)				1			N	A
8	1	129795-01950	PIPE, KNOCK L=18				2				
9	1	121850-51960	O-RING				1				A
10	1	24311-000160	O-RING, 1AP16.0				2				A
11	1	24311-000320	O-RING, 1AP32.0				1				A
12	1	26106-080122	BOLT, M8X 12 PLATED				4				
13	1	26106-080162	BOLT, M8X 16 PLATED				1				
14	1	26106-080162	BOLT, M8X 16 PLATED				3				
15	1	26106-080202	BOLT, M8X 20 PLATED				2				
16	1	26106-080452	BOLT, M8X 45 PLATED				6				
17	1	26106-080552	BOLT, M8X 55 PLATED				3				
18	1	26106-080852	BOLT, M8X 85 PLATED				4				
19	1	26366-080002	NUT, M8				3				
20	1	43400-500410	SEAL WASHER 8S				4				
20-1	1	22190-080002	WASHER, SEAL 6 (D=E/# 20467)				4			R	
21	1	43400-500410	SEAL WASHER 8S				1				
21-1	1	22190-080002	WASHER, SEAL 6 (D=E/# 20467)				1			R	
22	1	129150-91400	GEAR				1				
23	2	24341-000240	O-RING, 1AS24.0				1				A
24	1	26106-060162	BOLT, M6X 16 PLATED				2				

Remarks
(A) THIS PART IS ALSO SOLD BY GASKET SET(FIG 76.REF NO.1-1,P/# 729419 -92601).

N:Old ◄Yes/No► New. Q:Old ◄No/Yes► New. R:Old ◄Yes/Yes► New. S:Old ◄No/No► New. W:Add. Z:Discontinued. F:Interchangeable by set. K:Q'ty Change

Copyright (C) YANMAR GLOBAL CS CO., LTD. All RightsReserved.

Fig.59. FLYWHEEL HOUSING & OIL SUMP

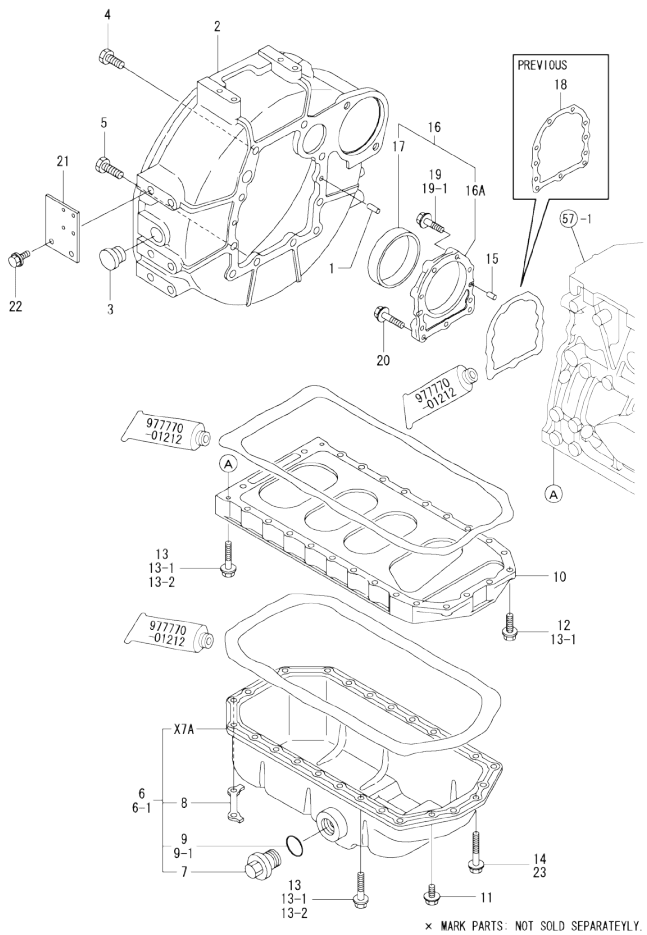

(A)=3TN66E-GB2
(B)=3TNA72E-GB2
(C)=3TN84E-GB2
(D)=4TN84E-GB2
(E)=
(F)=

No.	Lev.	Parts No.	Description	Q'ty (A)	(B)	(C)	(D)	(E)	(F)	I	R
1	1	129100-01580	PIN, M8X16				2				
2	1	171301-01600	HOUSING, FLYWHEEL				1				
3	1	119620-01750	CAP				1				
4	1	26206-100252	BOLT, M10X 25 PLATED				6				
5	1	26206-100302	BOLT, M10X 30 PLATED				4				
6	1	729400-01541	SUMP ASSY, OIL				1				
6-1	1	129400-01770	SUMP ASSY, OIL				1				R
			(D=EXXX)								
7	2	171301-01640	PLUG, 22				1				
8	2	129100-01790	RETAINER				2				Z
			(D=E/# 21418)								
9	2	24341-000240	O-RING, 1AS24.0				1				
9-1	2	24341-000250	O-RING, 1AS25.0				1				N
			(D=E/# 23443)								
10	1	129400-01730	SPACER, OIL SUMP				1				
11	1	26106-080162	BOLT, M8X 16 PLATED				4				
12	1	26106-080252	BOLT, M8X 25 PLATED				2				
13	1	26106-080452	BOLT, M8X 45 PLATED				20				
13-1	1	26106-080452	BOLT, M8X 45 PLATED				24				K
			(D=E/# 21418)								
13-2	1	26106-080452	BOLT, M8X 45 PLATED				20				K
			(D=FROM 1ST)								
14	1	26106-080502	BOLT, M8X 50 PLATED				4				Z
			(D=E/# 21418)								
15	1	129100-01580	PIN, M8X16				2				
16	1	129100-01640	CASE ASSY, OIL SEAL				1				W
			(D=E/# 02841)								
16A	2	129150-01650	CASE, OIL SEAL				1				
17	2	129795-01780	SEAL, OIL				1				
18	1	129150-01660	GASKET				1				Z
			(D=FROM 1ST)								
19	1	26106-080302	BOLT, M8X 30 PLATED				6				
19-1	1	129486-01670	BOLT, M8X30				6				R
			(D=E/# 25284)								
20	1	26106-080352	BOLT, M8X 35 PLATED				3				
21	1	129111-67010	SUPPORT, WIRE				1				
22	1	26106-080162	BOLT, M8X 16 PLATED				2				
23	1	26106-080502	BOLT, M8X 50 PLATED				4				W
			(D=FROM 1ST)								

N:Old ◄Yes/No► New. Q:Old ◄No/Yes► New. R:Old ◄Yes/Yes► New. S:Old ◄No/No► New. W:Add. Z:Discontinued. F:Interchangeable by set. K:Q'ty Change

Copyright (C) YANMAR GLOBAL CS CO., LTD. All RightsReserved.

Fig.60. CYLINDER HEAD & BONNET

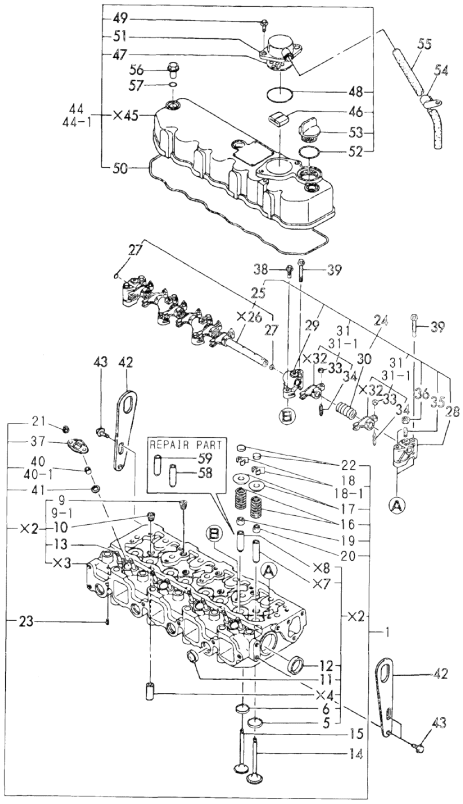

Remarks
(1) REPAIR PART.
(A) THIS PART IS ALSO SOLD BY GASKET SET(FIG 76.REF NO.1-1,P/# 729419 -92601).

(A)=3TN66E-GB2
(B)=3TNA72E-GB2
(C)=3TN84E-GB2
(D)=4TN84E-GB2
(E)=
(F)=

No.	Lev.	Parts No.	Description	Q'ty (A)	(B)	(C)	(D)	(E)	(F)	I	R
1	1	729402-11701	HEAD ASSY, CYLINDER				1				
5	3	129470-11080	SEAT, INTAKE VALVE				4				
6	3	129470-11090	SEAT, EXHAUST VALVE				4				
9	3	121850-11860	PLUG, PT1/4				3				
9-1	3	23871-020000	PLUG, R02				3			S	
			(D=E/# 25062)								
10	3	23871-030000	PLUG, R03				4				
11	3	27241-220000	PLUG, 22				4				
12	3	27241-400000	PLUG, 40				2				
13	3	26216-060202	STUD, M6X 20				8				
14	2	129100-11100	VALVE, INTAKE				4				
15	2	129100-11130	VALVE, EXHAUST				4				
16	2	129795-11120	SPRING, VALVE				8				
17	2	129795-11180	RETAINER, SPRING				8				
18	2	103338-11190	COTTER				8				
18-1	2	27310-080001	COTTER, 8				8			R	
			(D=E/# 23239)								
19	2	121400-11340	SEAL, VALVE STEM				4				A
20	2	124460-11340	SEAL, VALVE STEM				4				A
21	2	26366-060002	NUT, M6				8				
22	2	129150-11370	CAP, VALVE				8				
23	2	22351-060012	PIN, SPRING 6.0X12				2				
24	1	129555-11241	SHAFT ASSY, ROCKER				1				
25	2	129550-11290	SHAFT, ROCKER ARM				1				
27	3	27241-100000	PLUG, 10				2				
28	2	129155-11260	SUPPORT, ROCKER ARM				2				
29	2	129155-11270	SUPPORT, ROCKER ARM				3				
30	2	129150-11280	SPRING				4				
31	2	729150-11650	ARM ASSY, ROCKER				8				
31-1	2	729402-11650	ARM ASSY, ROCKER				8			R	
			(D=E/# 02841)								
33	3	129150-11750	NUT, M8				8				
34	3	129150-11230	SCREW, VALVE ADJUST				8				
35	2	26226-080182	STUD, M8X 18				3				
36	2	26756-080002	NUT, LOCK M8				3				
37	1	119625-11900	RETAINER, NOZZLE				4				
38	1	26106-080252	BOLT, M8X 25 PLATED				3				
39	1	26106-080502	BOLT, M8X 50 PLATED				7				
40	1	119625-11870	PROTECTOR, NOZZLE				4				A
40-1	1	119625-11871	PROTECTOR, NOZZLE				4			R	
			(D=E/# 22831)								
41	1	119625-11880	SEAT, NOZZLE				4				A
42	1	124736-07900	LIFTER				2				
43	1	26106-080142	BOLT, M8X 14 PLATED				4				
44	1	729403-11520	BONNET ASSY, HEAD				1				
44-1	1	129400-11350	BONNET ASSY, HEAD				1			R	
			(D=E/# 02841)								
46	2	129150-03070	BAFFLE, BREATHER				1				
47	2	129150-03080	PLATE, BAFFLE				1				
48	2	24341-000500	O-RING, 1AS50.0				1				A
49	2	26106-080162	BOLT, M8X 16 PLATED				2				

N:Old ←Yes/No→ New. Q:Old ←No/Yes→ New. R:Old ←Yes/Yes→ New. S:Old ←No/No→ New. W:Add. Z:Discontinued. F:Interchangeable by set. K:Q'ty Change

++ CONTINUE ++

Copyright (C) YANMAR GLOBAL CS CO., LTD. All RightsReserved.

Fig.60. CYLINDER HEAD & BONNET

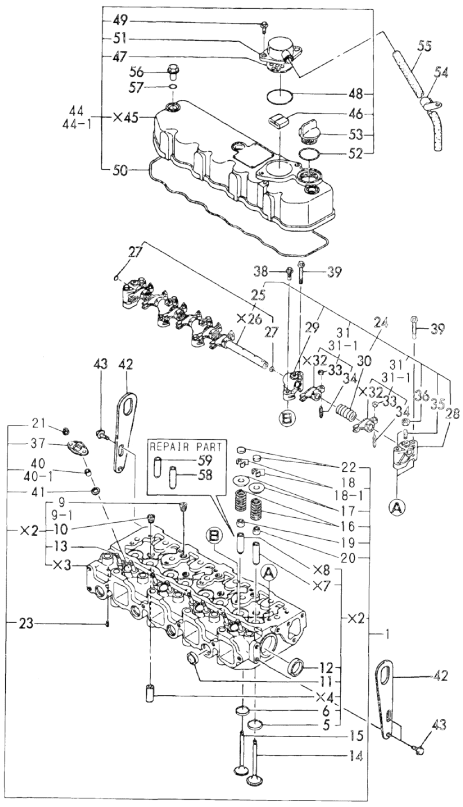

Remarks
(1) REPAIR PART.
(A) THIS PART IS ALSO SOLD BY GASKET SET(FIG 76.REF NO.1-1,P/# 729419 -92601).

(A)=3TN66E-GB2
(B)=3TNA72E-GB2
(C)=3TN84E-GB2
(D)=4TN84E-GB2
(E)=
(F)=

No.	Lev.	Parts No.	Description	Q'ty (A)	(B)	(C)	(D)	(E)	(F)	I	R
50	2	129550-11310	GASKET, BONNET				1				A
51	2	129150-03020	COVER, BREATHER				1				
52	1	24311-000320	O-RING, 1AP32.0				1				
53	2	124160-01751	COVER, FILLER				1				
54	1	129150-03100	RETAINER, PIPE				1				
55	1	171350-03090	PIPE , BREATHER 900				1				
56	1	124160-11360	KNOB				3				
57	1	24311-000120	O-RING, 1AP12.0				3				A
58	1	120130-11860	GUIDE, VALVE				4				1
59	1	129150-11810	GUIDE, VALVE				4				1

N:Old ←Yes/No→ New. Q:Old ←No/Yes→ New. R:Old ←Yes/Yes→ New. S:Old ←No/No→ New. W:Add. Z:Discontinued. F:Interchangeable by set. K:Q'ty Change

Copyright (C) YANMAR GLOBAL CS CO., LTD. All RightsReserved.

Fig.61. SUCTION MANIFOLD & AIR CLEANER

(A)=3TN66E-GB2
(B)=3TNA72E-GB2
(C)=3TN84E-GB2
(D)=4TN84E-GB2
(E)=
(F)=

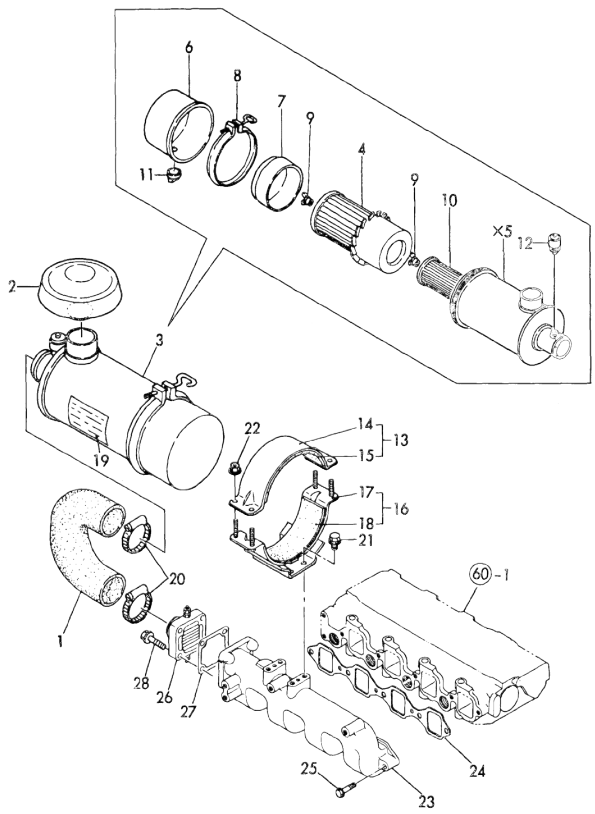

No.	Lev.	Parts No.	Description	Q'ty (A)	(B)	(C)	(D)	(E)	(F)	I	R
1	1	171351-12210	PIPE, AIR INTAKE				1				
2	1	121521-12400	CAP, RAIN				1				
3	1	121521-12500	CLEANER ASSY, AIR				1				
4	2	121420-12511	ELEMENT				1				
6	2	121422-12530	CUP				1				
7	2	121420-12540	SCARF, BAFFLE				1				
8	2	121420-12550	CLAMP ASSY				1				
9	2	121420-12561	NUT, WING				2				
10	2	121422-12570	ELEMENT				1				
11	2	121422-12580	VALVE, UNLOADER				1				
12	2	126650-12680	INDICATOR				1				
13	1	121400-12540	BAND ASSY, CLEANER				1				
14	2	121400-12560	BAND, AIR CLEANER				1				
15	2	121400-12570	SEAT, RUBBER B				1				
16	1	171351-12580	SUPPORT ASSY,CLEANER				1				
17	2	171351-12560	SUPPORT, AIR CLEANER				1				
18	2	171351-12570	SEAT, RUBBER				1				
19	1	171064-12600	LABEL, AIR CLEANER				1				
20	1	23000-060000	CLAMP, 60				2				
21	1	26106-080142	BOLT, M8X 14 PLATED				4				
22	1	26366-060002	NUT, M6				4				
23	1	129488-12100	MANIFOLD, AIR INTAKE				1				
24	1	129550-12110	GASKET, MANIFOLD				1				
24-1	1	129550-12111	GASKET, MANIFOLD (D=E/# 03645)				1			N	A
25	1	26106-080352	BOLT, M8X 35 PLATED				5				
26	1	129120-77501	HEATER				1				
27	1	129150-77510	GASKET				1				
27-1	1	129150-77511	GASKET (D=E/# 03645)				1			N	A
28	1	26106-080352	BOLT, M8X 35 PLATED				4				

Remarks
(A) THIS PART IS ALSO SOLD BY GASKET SET(FIG 76.REF NO.1-1,P/# 729419 -92601).

N:Old ←Yes/No→ New. Q:Old ←No/Yes→ New. R:Old ←Yes/Yes→ New. S:Old ←No/No→ New. W:Add. Z:Discontinued. F:Interchangeable by set. K:Q'ty Change

Copyright (C) YANMAR GLOBAL CS CO., LTD. All RightsReserved.

Fig.62. EXHAUST MANIFOLD & SILENCER

(A)=3TN66E-GB2
(B)=3TNA72E-GB2
(C)=3TN84E-GB2
(D)=4TN84E-GB2
(E)=
(F)=

No.	Lev.	Parts No.	Description	Q'ty (A)	(B)	(C)	(D)	(E)	(F)	I	R
1	1	129400-13200	GASKET, SILENCER				1				
1-1	1	129400-13201	GASKET, SILENCER (D=E/# 03645)				1			N	A
2	1	129411-13500	SILENCER				1				
3	1	129411-13600	COVER, SILENCER				1				
4	1	129411-13650	STAY, SILENCER				1				
5	1	129411-13670	BAND, SILENCER				1				
6	1	129411-13680	BAND, SILENCER				1				
7	1	194990-22050	NUT, M8				4				
8	1	26014-080302	BOLT, M8X 30				2				
9	1	26106-080122	BOLT, M8X 12 PLATED				8				
10	1	26106-080142	BOLT, M8X 14 PLATED				2				
11	1	129411-13100	MANIFOLD, EXHAUST				1				
12	1	129550-13110	GASKET				1				A
13	1	194990-22050	NUT, M8				2				
14	1	26106-080802	BOLT, M8X 80 PLATED				6				
15	1	26216-080222	STUD, M8X 22				4				
16	1	26216-080802	STUD, M8X 80				2				

Remarks
(A) THIS PART IS ALSO SOLD BY GASKET SET(FIG 76.REF NO.1-1,P/# 729419 -92601).

N:Old ←Yes/No→ New. Q:Old ←No/Yes→ New. R:Old ←Yes/Yes→ New. S:Old ←No/No→ New. W:Add. Z:Discontinued. F:Interchangeable by set. K:Q'ty Change

Copyright (C) YANMAR GLOBAL CS CO., LTD. All RightsReserved.

Fig.63. CAMSHAFT & DRIVING GEAR

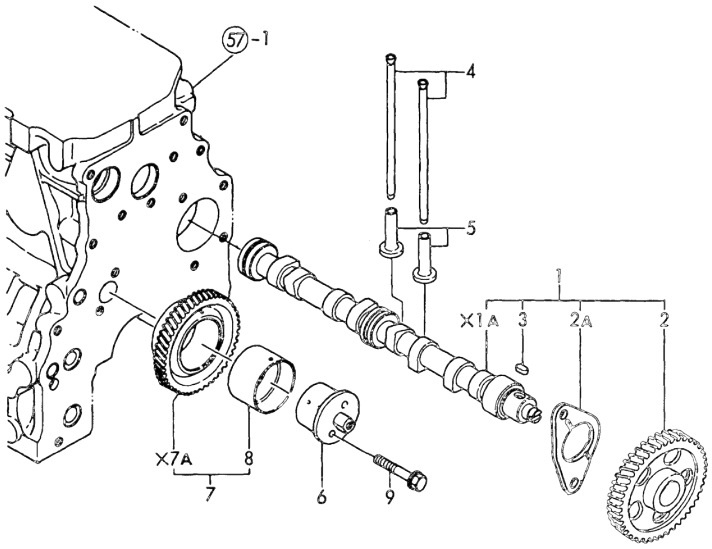

(A)=3TN66E-GB2
(B)=3TNA72E-GB2
(C)=3TN84E-GB2
(D)=4TN84E-GB2
(E)=
(F)=

No.	Lev.	Parts No.	Description	Q'ty (A)	(B)	(C)	(D)	(E)	(F)	I	R
1	1	729402-14580	CAMSHAFT ASSY (D=EXXX)				1			W	
2	2	129150-14101	GEAR, CAMSHAFT				1				
2A	2	129150-02450	BEARING, THRUST				1				
3	2	22512-070140	KEY, 7X 14				1				
4	1	129150-14400	ROD, PUSH L=178				8				
5	1	129150-14200	TAPPET				8				
6	1	129100-25061	SHAFT, IDLE				1				
7	1	129150-25101	GEAR ASSY, IDLE				1				
8	2	129150-25061	BUSH, IDLE GEAR				1				
9	1	26106-080452	BOLT, M8X 45 PLATED				2				

N:Old ◄Yes/No► New. Q:Old ◄No/Yes► New. R:Old ◄Yes/Yes► New. S:Old ◄No/No► New. W:Add. Z:Discontinued. F:Interchangeable by set. K:Q'ty Change

Copyright (C) YANMAR GLOBAL CS CO., LTD. All RightsReserved.

Fig.64. CRANKSHAFT & PISTON

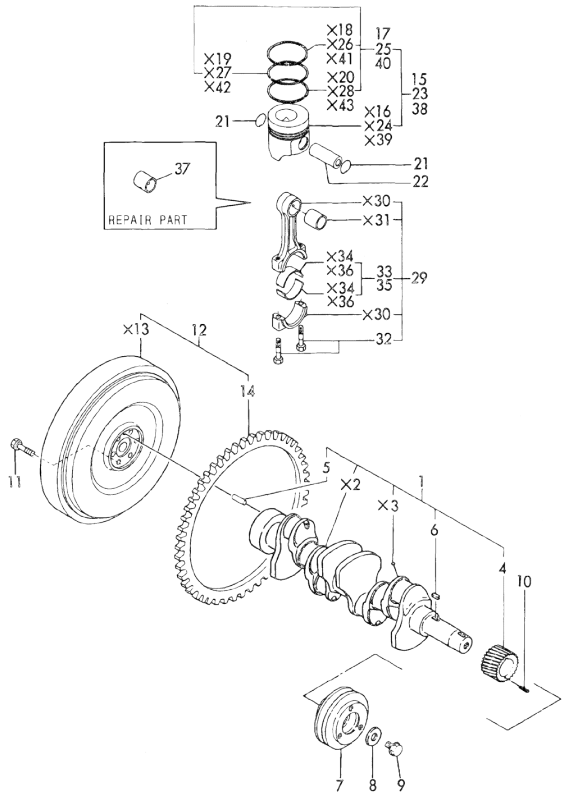

Remarks
(1) OVER-SIZE(O.S.=0.25)PART.
(2) UNDER-SIZE(U.S.=0.25)PART.
(3) REPAIR PART.
(4) OVER-SIZE(O.S.=0.5)PART.

(A)=3TN66E-GB2
(B)=3TNA72E-GB2
(C)=3TN84E-GB2
(D)=4TN84E-GB2
(E)=
(F)=

No.	Lev.	Parts No.	Description	Q'ty (A)	(B)	(C)	(D)	(E)	(F)	I	R
1	1	729474-21700	CRANKSHAFT ASSY				1				
1-1	1	729400-21700	CRANKSHAFT ASSY (D=EXXX)				1			N	
4	2	129150-21200	GEAR, CRANKSHAFT				1				
5	2	129100-01580	PIN, M8X16				1				
6	2	22512-070140	KEY, 7X 14				1				
7	1	171301-21650	V-PULLEY				1				
8	1	129795-21661	WASHER				1				
9	1	121850-21680	BOLT				1				
10	1	22351-040010	PIN, SPRING 4.0X10				1				
11	1	121111-21501	BOLT, FLYWHEEL				6				
12	1	171420-21580	FLYWHEEL ASSY				1				
14	2	119865-21600	GEAR, RING				1				
15	1	129105-22090	PISTON ASSY				4				
17	2	729105-22500	RING SET, PISTON				4				
21	1	129150-22300	PIN, PISTON D26 L66				4				
22	1	121100-22400	CIRCLIP				8				
23	1	729105-22910	PISTON ASSY, 0.25 OS				4				1
25	2	729105-22951	RING SET, 0.25 OS				4				1
29	1	729150-23700	ROD ASSY, CONNECTING				4				
29-1	1	729402-23100	ROD ASSY, CONNECTING (D=E/# 02841)				4			R	
32	2	121550-23200	BOLT, CONNECTING ROD				8				
33	1	129150-23600	BEARING, CRANK PIN				4				
35	1	129150-23610	BEARING, 0.25 US				4				2
37	1	129100-23910	BEARING, PISTON PIN				4				3
38	1	129105-22920	PISTON ASSY, 0.50 OS				4				4
40	2	129105-22970	RING SET, 0.50 OS				4				4

N:Old ←Yes/No→ New. Q:Old ←No/Yes→ New. R:Old ←Yes/Yes→ New. S:Old ←No/No→ New. W:Add. Z:Discontinued. F:Interchangeable by set. K:Q'ty Change

Copyright (C) YANMAR GLOBAL CS CO., LTD. All RightsReserved.

Fig.65. LUB. OIL PUMP

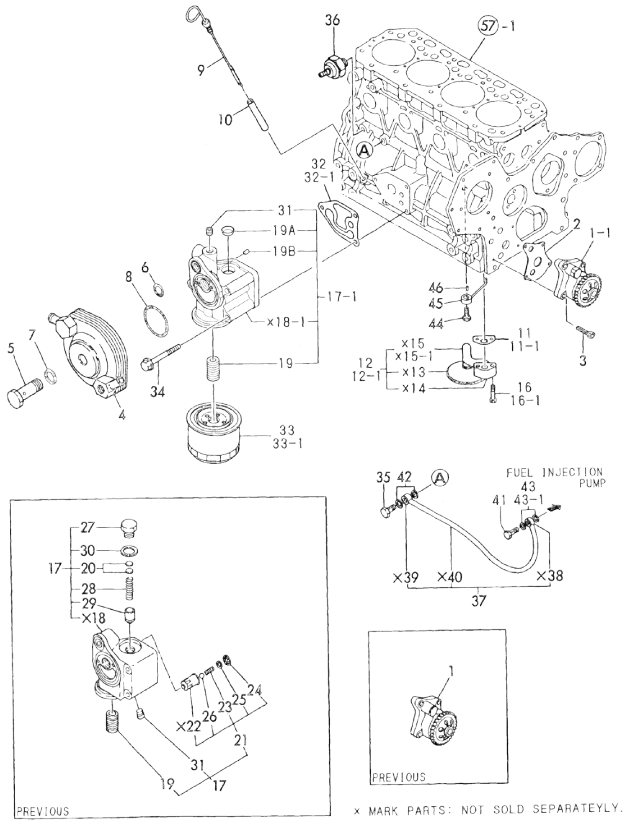

x MARK PARTS: NOT SOLD SEPARATEYLY.

Remarks
(A) THIS PART IS ALSO SOLD BY GASKET SET(FIG 76.REF NO.1-1,P/# 729419 -92601).

(A)=3TN66E-GB2
(B)=3TNA72E-GB2
(C)=3TN84E-GB2
(D)=4TN84E-GB2
(E)=
(F)=

No.	Lev.	Parts No.	Description	Q'ty (A)	(B)	(C)	(D)	(E)	(F)	I	R
1	1	129553-32000	PUMP ASSY, OIL				1				
1-1	1	129418-32000	PUMP ASSY, OIL (D=E/# 23239)				1			S	
2	1	129150-32020	GASKET, PUMP				1				A
3	1	26450-060252	BOLT, M6X 25				4				
4	1	129103-33031	COOLER, OIL				1				
5	1	129103-33132	BOLT				1				
6	1	24311-000200	O-RING, 1AP20.0				1				
7	1	24311-000210	O-RING, 1AP21.0				1				
8	1	24321-000550	O-RING, 1AG55.0				1				
9	1	129403-34800	DIPSTICK, OIL				1				
10	1	121520-34810	GUIDE, DIPSTICK				1				
11	1	129150-35040	GASKET				1				
11-1	1	129150-35041	GASKET (D=E/# 03645)				1			N	A
12	1	129100-35300	PIPE ASSY, OIL INLET				1				
12-1	1	129436-35090	PIPE ASSY, OIL INLET (D=E/# 01405)				1			N	
16	1	26116-080352	BOLT, M8X 35 PLATED				2				
16-1	1	26106-080352	BOLT, M8X 35 PLATED (D=E/# 01405)				2			N	
17	1	129103-35101	BRACKET ASSY, FILTER				1				
17-1	1	129418-35100	BRACKET ASSY (D=E/# 23239)				1			S	
19	2	129100-35140	STUD				1				
19A	2	27241-200000	PLUG, 20 (D=E/# 23239)				1			W	
19B	2	22312-060080	PIN, PARALLEL M6X 8 (D=E/# 23239)				2			W	
20	2	121850-35200	SHIM SET (D=E/# 23239)				1			Z	
21	2	129553-35500	VALVE ASSY, BYPASS (D=E/# 00426)				1			Z	
23	3	129553-35520	SPRING (D=E/# 00426)				1			Z	
24	3	129553-35530	RETAINER, SPRING (D=E/# 00426)				1			Z	
25	3	129553-35540	SHIM (D=E/# 00426)				1			Z	
26	3	24190-130001	BALL, STEEL 13/32 (D=E/# 00426)				1			Z	
27	2	124223-35510	RETAINER, SPRING (D=E/# 23239)				1			Z	
28	2	121850-35520	SPRING (D=E/# 23239)				1			Z	
29	2	121850-35531	VALVE, CONTROL (D=E/# 23239)				1			Z	
30	2	23414-180000	GASKET, 18X1.0 (D=E/# 23239)				1			Z	
31	2	23871-020000	PLUG, R02				1				
32	1	129103-35121	GASKET				1				

N:Old ←Yes/No→ New. Q:Old ←No/Yes→ New. R:Old ←Yes/Yes→ New. S:Old ←No/No→ New. W:Add. Z:Discontinued. F:Interchangeable by set. K:Q'ty Change

++ CONTINUE ++

Copyright (C) YANMAR GLOBAL CS CO., LTD. All RightsReserved.

Fig.65. LUB. OIL PUMP

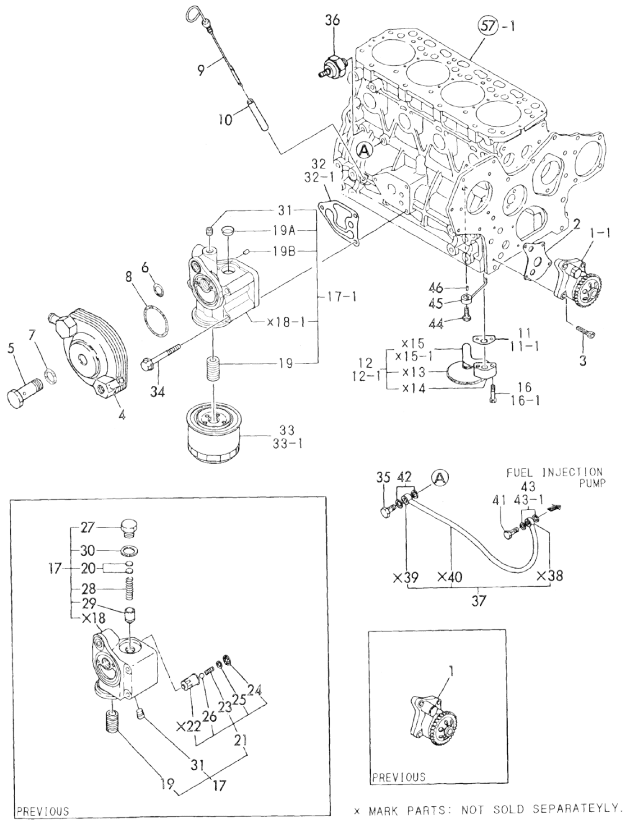

x MARK PARTS: NOT SOLD SEPARATEYLY.

Remarks
(A) THIS PART IS ALSO SOLD BY GASKET SET(FIG 76.REF NO.1-1,P/# 729419 -92601).

(A)=3TN66E-GB2
(B)=3TNA72E-GB2
(C)=3TN84E-GB2
(D)=4TN84E-GB2
(E)=
(F)=

No.	Lev.	Parts No.	Description	Q'ty (A)	(B)	(C)	(D)	(E)	(F)	I	R
32-1	1	129103-35122	GASKET				1			N	A
			(D=E/# 03645)								
33	1	129150-35150	FILTER 90X80L				1				
33-1	1	129150-35151	FILTER, D80XL80				1			S	
			(D=EXXX)								
34	1	26106-080752	BOLT, M8X 75 PLATED				3				
35	1	124160-39140	BOLT, PIPE JOINT M10				1				
36	1	124160-39450	SWITCH, 0.5KG				1				
37	1	129550-39450	PIPE ASSY, OIL				1				
41	1	124550-59820	BOLT, PIPE JOINT M8				1				
42	1	23414-100000	GASKET, 10X1.0				2				A
43	1	43400-500410	SEAL WASHER 8S				2				
43-1	1	22190-080002	WASHER, SEAL 6				2			R	A
			(D=E/# 20467)								
44	1	129792-39410	VALVE ASSY, CHECK				4				
45	1	129553-39650	NOZZLE				4				
46	1	22351-030010	PIN, SPRING 3.0X10				4				

N:Old ◄Yes/No► New. Q:Old ◄No/Yes► New, R:Old ◄Yes/Yes► New, S:Old ◄No/No► New. W:Add. Z:Discontinued. F:Interchangeable by set. K:Q'ty Change

Copyright (C) YANMAR GLOBAL CS CO., LTD. All RightsReserved.

Fig.66. COOLING WATER SYSTEM

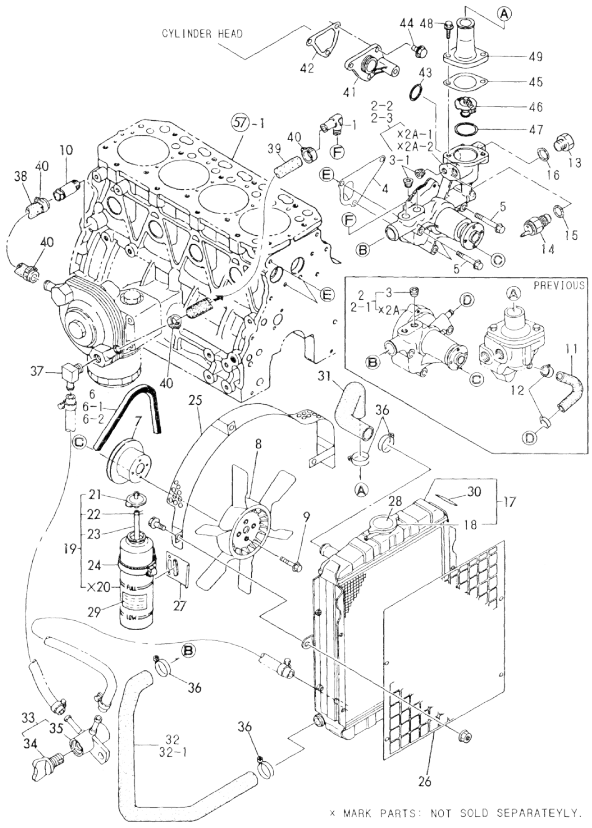

(A)=3TN66E-GB2
(B)=3TNA72E-GB2
(C)=3TN84E-GB2
(D)=4TN84E-GB2
(E)=
(F)=

No.	Lev.	Parts No.	Description	Q'ty (A)	(B)	(C)	(D)	(E)	(F)	I	R
1	1	129103-49301	ELBOW, PT1/4				1				
2	1	129100-42001	PUMP ASSY, WATER				1				
2-1	1	129100-42002	PUMP ASSY, WATER				1			N	
			(D=E/# 03645)								
2-2	1	129001-42001	PUMP ASSY, WATER				1			S	
			(D=E/# 25234)								
2-3	1	129001-42002	PUMP ASSY, WATER				1			N	
			(D=E/# 25284)								
3	2	23871-030000	PLUG, R03				1				
3-1	2	23871-030000	PLUG, R03				2			K	
			(D=E/# 25234)								
4	1	129100-42020	GASKET, WATER PUMP				1				A
5	1	26106-080602	BOLT, M8X 60 PLATED				3				
6	1	124732-42290	V-BELT, AX37				1				
6-1	1	25132-003700	V-BELT, A37				1			R	
			(D=E/# 24368)								
6-2	1	25132-003800	V-BELT, A38				1			N	
			(D=E/# 25234)								
7	1	129403-42380	V-PULLEY, D=110				1				
8	1	129403-44740	FAN, COOLING 370				1				
9	1	26014-060162	BOLT, M6X 16				4				
10	1	121750-49110	JOINT				1				
11	1	129100-49050	PIPE, WATER				1			Z	
			(D=E/# 25234)								
12	1	23000-016000	CLAMP, 16				2			Z	
			(D=E/# 25234)								
13	1	121450-42450	PLUG, M16				1				
14	1	121250-44901	SWITCH, 110				1				
15	1	124465-44950	GASKET, 16				1				A
16	1	124465-44950	GASKET, 16				1				A
17	1	171460-44500	RADIATOR				1				
18	2	123682-44210	CAP, RADIATOR				1			N	
			(D=FROM 1ST)								
19	1	124450-44510	TANK ASSY, SUB				1				
21	2	124450-44530	CAP				1				
22	2	124450-44560	RETAINER				1				
23	2	23061-070230	PIPE, 7X 230				1				
24	1	124450-44550	BAND				1				
25	1	129411-44560	PROTECTOR, FAN				1				
26	1	129411-44590	PROTECTOR				1				
27	1	121256-44600	BRACKET, SUB TANK				1				
28	1	124764-44800	LABEL, RADIATOR				1				
29	1	124764-44810	LABEL, SUB TANK				1				
30	1	121400-44910	LABEL, RADIATOR				1				
31	1	171420-49010	PIPE, WATER				1				
32	1	171420-49020	PIPE, WATER				1				
32-1	1	129608-49020	PIPE, WATER				1			N	
			(D=E/# 25234)								
33	1	129150-49100	COCK ASSY, 3-WAY				1				
34	2	129150-49080	COCK, DRAIN				1				
35	2	129150-49090	BODY, 3-WAY COCK				1				

N:Old ←Yes/No→ New. Q:Old ←No/Yes→ New. R:Old ←Yes/Yes→ New. S:Old ←No/No→ New. W:Add. Z:Discontinued. F:Interchangeable by set. K:Q'ty Change

Remarks
(A) THIS PART IS ALSO SOLD BY GASKET SET(FIG 76.REF NO.1-1,P/# 729419 -92601).

++ CONTINUE ++

Copyright (C) YANMAR GLOBAL CS CO., LTD. All RightsReserved.

Fig.66. COOLING WATER SYSTEM

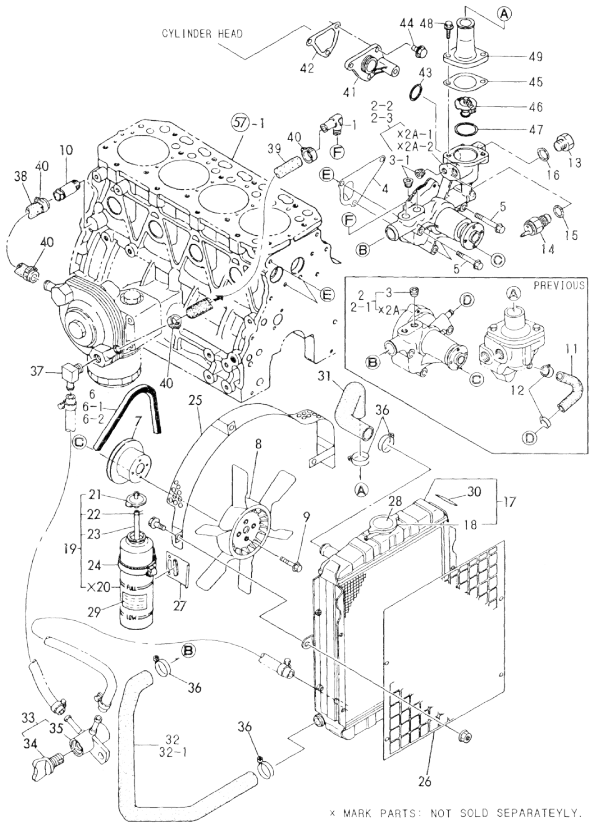

(A)=3TN66E-GB2
(B)=3TNA72E-GB2
(C)=3TN84E-GB2
(D)=4TN84E-GB2
(E)=
(F)=

No.	Lev.	Parts No.	Description	Q'ty (A)	(B)	(C)	(D)	(E)	(F)	I	R
36	1	23010-038000	CLAMP, 38				4				
37	1	129122-44480	JOINT				1				
38	1	129403-49031	PIPE, WATER				1				
39	1	129403-49050	PIPE, WATER				1				
40	1	23000-022000	CLAMP, 22				4				
41	1	129001-42040	JOINT				1			W	
42	1	129100-49840	(D=E/# 25234) GASKET (D=E/# 25234)				1			W	A
43	1	24321-000300	O-RING, 1AG30.0				1			W	
44	1	26106-080162	(D=E/# 25234) BOLT, M8X 16 PLATED				3			W	
45	1	129795-49551	(D=E/# 25234) GASKET (D=E/# 25234)				1			W	A
46	1	129155-49800	THERMOSTAT, 71				1			W	
47	1	129150-49811	(D=E/# 25234) GASKET, THERMOSTAT				1			W	A
48	1	26106-080202	(D=E/# 25234) BOLT, M8X 20 PLATED (D=E/# 25234)				2			W	
49	1	129350-49560	COVER, THERMOSTAT (D=E/# 25234)				1			W	

Remarks
(A) THIS PART IS ALSO SOLD BY GASKET SET(FIG 76.REF NO.1-1,P/# 729419 -92601).

N:Old ←Yes/No→ New. Q:Old ←No/Yes→ New. R:Old ←Yes/Yes→ New. S:Old ←No/No→ New. W:Add. Z:Discontinued. F:Interchangeable by set. K:Q'ty Change

Copyright (C) YANMAR GLOBAL CS CO., LTD. All RightsReserved.

Fig.67. THERMOSTAT

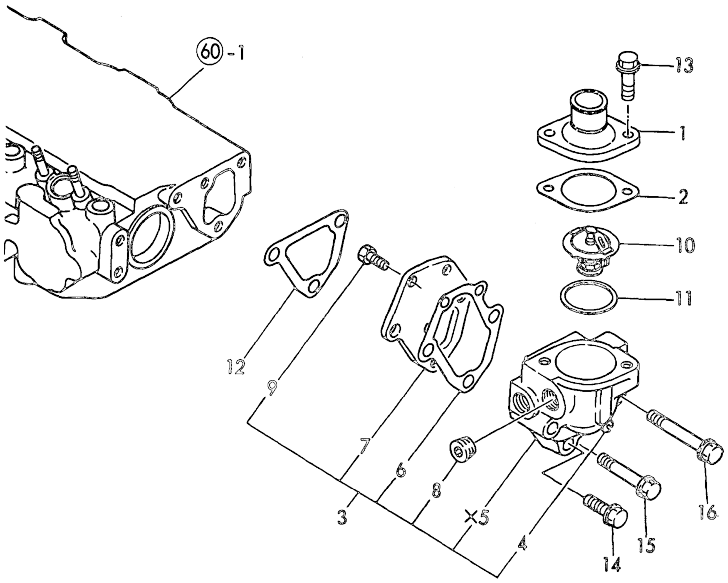

(A)=3TN66E-GB2
(B)=3TNA72E-GB2
(C)=3TN84E-GB2
(D)=4TN84E-GB2
(E)=
(F)=

No.	Lev.	Parts No.	Description	Q'ty (A)	(B)	(C)	(D)	(E)	(F)	I	R
1	1	129350-49530	COVER, THERMOSTAT (D=E/# 25234)				1			Z	
2	1	129795-49550	GASKET				1				
2-1	1	129795-49551	GASKET (D=E/# 03645)				1			N	A
2-2	1	129795-49551	GASKET (D=E/# 25234)				1			Z	
3	1	129100-49800	CASE ASSY,THERMOSTAT (D=E/# 25234)				1			Z	
4	2	124770-11770	JOINT, PIPE PT1/8 (D=E/# 25234)				1			Z	
6	2	129100-49820	GASKET (D=E/# 25234)				1			Z	
7	2	129100-49830	COVER, THERMOSTAT (D=E/# 25234)				1			Z	
8	2	23871-030000	PLUG, R03 (D=E/# 25234)				1			Z	
9	2	26116-060162	BOLT, M6X 16 PLATED (D=E/# 25234)				2			Z	
10	1	129155-49800	THERMOSTAT, 71 (D=E/# 25234)				1			Z	
11	1	129150-49810	GASKET, THERMOSTAT				1				
11-1	1	129150-49811	GASKET, THERMOSTAT (D=E/# 03645)				1			N	A
11-2	1	129150-49811	GASKET, THERMOSTAT (D=E/# 25234)				1			Z	
12	1	129100-49840	GASKET (D=E/# 25234)				1			Z	A
13	1	26106-080202	BOLT, M8X 20 PLATED (D=E/# 25234)				2			Z	
14	1	26106-080252	BOLT, M8X 25 PLATED (D=E/# 25234)				1			Z	
15	1	26106-080502	BOLT, M8X 50 PLATED (D=E/# 25234)				1			Z	
16	1	26106-080602	BOLT, M8X 60 PLATED (D=E/# 25234)				1			Z	

Remarks
(A) THIS PART IS ALSO SOLD BY GASKET SET(FIG 76.REF NO.1-1,P/# 729419 -92601).

N:Old ←Yes/No→ New. Q:Old ←No/Yes→ New. R:Old ←Yes/Yes→ New. S:Old ←No/No→ New. W:Add. Z:Discontinued. F:Interchangeable by set. K:Q'ty Change

Copyright (C) YANMAR GLOBAL CS CO., LTD. All RightsReserved.

Fig.68. FUEL INJECTION PUMP

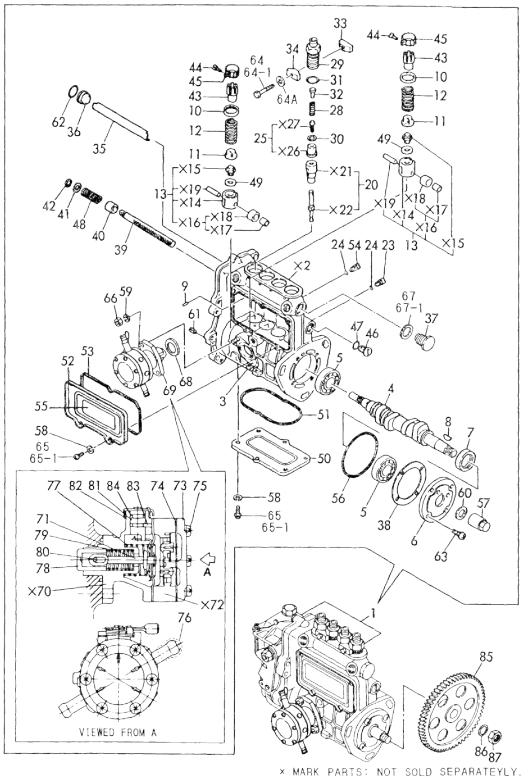

Remarks
(1) GOVERNOR(FIG.71) IS INCORPORATED IN THIS FUEL INJECTION PUMP ASSY. (REF.NO.1)
(A) THIS PART IS ALSO SLD BY GASKET SET(FIG 76.REF NO.1-1,P/# 729419 -92601).

(A)=3TN66E-GB2
(B)=3TNA72E-GB2
(C)=3TN84E-GB2
(D)=4TN84E-GB2
(E)=
(F)=

No.	Lev.	Parts No.	Description	Q'ty (A)	(B)	(C)	(D)	(E)	(F)	I	R
1	1	729411-51430	PUMP ASSY, INJECTION				1				1
3	2	129155-51020	STUD				2				
4	2	129470-51040	CAMSHAFT				1				
5	2	122710-51050	BEARING, HR30203J				2				
6	2	129470-51060	RETAINER, BEARING				1				
7	2	129470-51080	SEAL, AF0741F0				1				
8	2	122710-51090	KEY				1				
9	2	129155-51140	PIN				4				
10	2	174307-51170	RETAINER, SPRING A				4				
11	2	129155-51180	RETAINER, SPRING				4				
12	2	124950-51190	SPRING, PLUNGER				4				
13	2	129155-51200	TAPPET ASSY				4				
20	2	129400-51200	PLUNGER ASSY				4				
23	2	129155-51270	STOPPER, TAPPET				4				
24	2	129155-51280	O-RING, S6				4				
25	2	128170-51300	VALVE ASSY, DELIVERY				4				
28	2	129155-51320	SPRING, DELIVERY				4				
29	2	129155-51340	RETAINER				4				
30	2	124550-51350	GASKET, DELIVERY				4				
31	2	124550-51370	O-RING				4				
32	2	129155-51370	STOPPER, VALVE				4				
33	2	129155-51380	STOPPER				2				
34	2	129155-51390	STOPPER				2				
35	2	129555-51400	DEFLECTOR				1				
36	2	129155-51410	BOLT				1				
37	2	129155-51420	PLUG, M16				1				
38	2	129155-51450	SHIM SET, ADJUSTING				1				
39	2	129555-51500	RACK, CONTROL				1				
40	2	129155-51521	BUSH, RACK				1				
41	2	129155-51530	SPACER				1				
42	2	129155-51540	CIRCLIP				1				
43	2	129155-51550	PINION, CONTROL				4				
44	2	122117-51560	SCREW				4				
45	2	174307-51560	PINION				4				
46	2	129155-51570	PLUG, M12				1				
47	2	129155-51580	O-RING				1				
48	2	129155-51591	SPRING, RACK				1				
49	2	129155-51600	SHIM SET, ADJUSTING				4				
50	2	129555-51700	COVER				1				
51	2	129555-51710	GASKET				1				
52	2	129555-51750	COVER				1				
53	2	129555-51760	GASKET				1				
54	2	129155-51790	STOOPER, RACK				1				
55	2	129156-51910	LABEL, CAUTION				1				
56	2	121850-51960	O-RING				1				Z
			(D=FROM 1ST)								
57	2	121850-61380	NUT				1				Z
			(D=EXXX)								
58	2	22217-050000	WASHER, SPRING 5				11				Z
			(D=EXXX)								
59	2	22217-060000	WASHER, SPRING 6				2				

N:Old ←Yes/No→ New. Q:Old ←No/Yes→ New. R:Old ←Yes/Yes→ New. S:Old ←No/No→ New. W:Add. Z:Discontinued. F:Interchangeable by set. K:Q'ty Change

++ CONTINUE ++

Copyright (C) YANMAR GLOBAL CS CO., LTD. All RightsReserved.

Fig.68. FUEL INJECTION PUMP

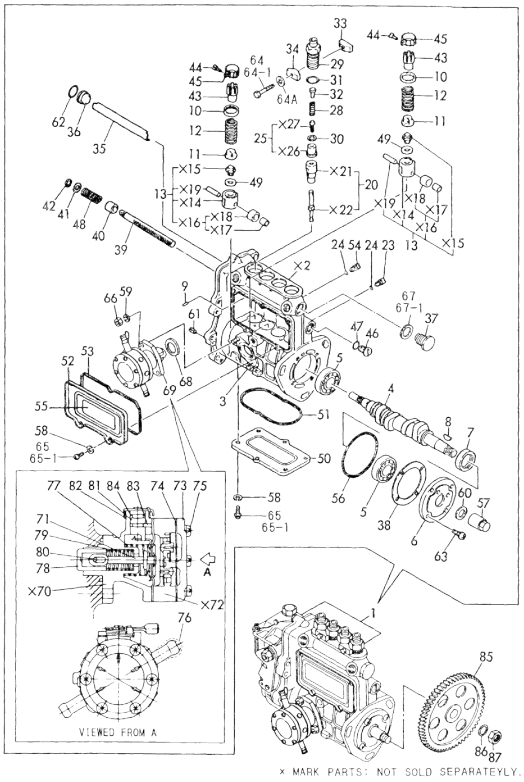

Remarks
(1) GOVERNOR(FIG.71) IS INCORPORATED IN THIS FUEL INJECTION PUMP ASSY. (REF.NO.1)
(A) THIS PART IS ALSO SLD BY GASKET SET(FIG 76.REF NO.1-1,P/# 729419 -92601).

(A)=3TN66E-GB2
(B)=3TNA72E-GB2
(C)=3TN84E-GB2
(D)=4TN84E-GB2
(E)=
(F)=

No.	Lev.	Parts No.	Description	Q'ty (A)	(B)	(C)	(D)	(E)	(F)	I	R
60	2	22287-120000	WASHER, 12				1				
61	2	22351-050010	PIN, SPRING 5.0X10				2				
62	2	24341-000160	O-RING, 1AS16.0				1				
63	2	26022-060162	SCREW, M6X16				4				
64	2	26116-050309	BOLT M 5X 30 PLATED				2				
64-1	2	26116-050302	BOLT, M5X 30 PLATED				2			N	
			(D=EXXX)								
64A	2	22217-050000	WASHER, SPRING 5				2			W	
			(D=EXXX)								
65	2	26557-050102	SCREW, M5X10				11				
65-1	2	26022-050102	SCREW, M5X10				11			N	
			(D=EXXX)								
66	2	26716-060002	NUT, M6				2				
67	2	43400-500490	SEAL WASHER 16S				1				
67-1	2	22190-160002	WASHER, SEAL 16				1			N	
			(D=E/# 20467)								
68	2	129155-52050	GASKET				1				A
69	2	129100-52100	PUMP ASSY, FUEL FEED				1				
71	3	129158-52020	DIAPHRAGM				1				
73	3	129158-52060	COVER				1				
74	3	129158-52070	GASKET				1				
75	3	129158-52080	SCREW				6				
76	3	129158-52090	CAP				2				
77	3	129158-52160	SPRING				1				
78	3	129158-52250	TAPPET				1				
79	3	129158-52260	SPRING				1				
80	3	129158-52270	PIN				1				
81	3	129158-52350	LEVER				1				
82	3	129158-52360	SPRING, RETURN				1				
83	3	129158-52370	PIN				1				
84	3	129158-52380	O-RING				1				
85	1	129100-25900	GEAR, PUMP				1				
86	1	22217-120000	WASHER, SPRING 12				1				
87	1	26716-120002	NUT, M12				1				

N:Old ←Yes/No→ New. Q:Old ←No/Yes→ New. R:Old ←Yes/Yes→ New. S:Old ←No/No→ New. W:Add. Z:Discontinued. F:Interchangeable by set. K:Q'ty Change

Copyright (C) YANMAR GLOBAL CS CO., LTD. All RightsReserved.

Fig.69. FUEL INJECTION PIPE

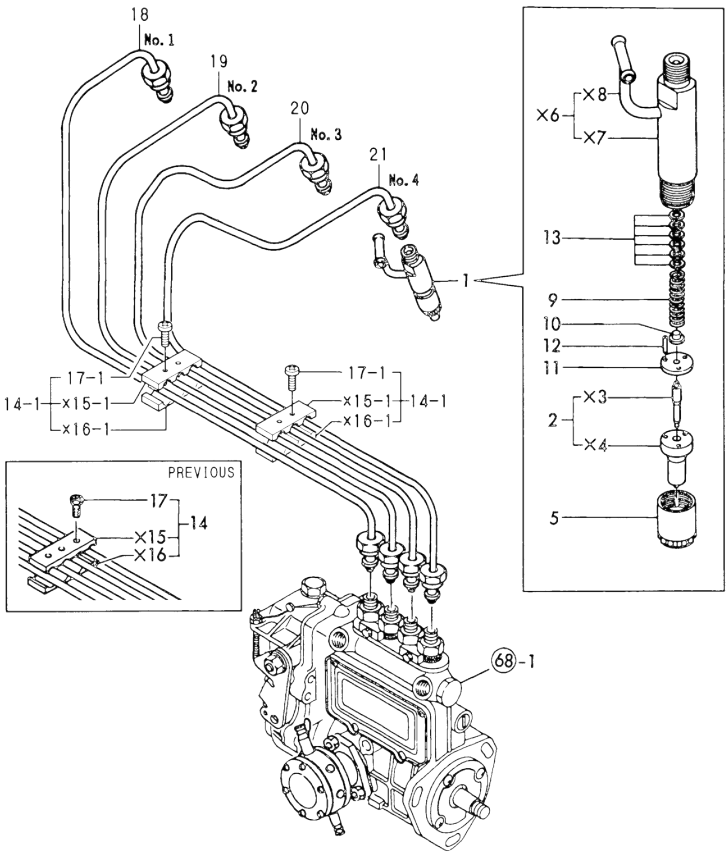

(A)=3TN66E-GB2
(B)=3TNA72E-GB2
(C)=3TN84E-GB2
(D)=4TN84E-GB2
(E)=
(F)=

No.	Lev.	Parts No.	Description	Q'ty (A)	(B)	(C)	(D)	(E)	(F)	I	R
1	1	729503-53200	VALVE ASSY,INJECTION				4				
2	2	129503-53050	VALVE ASSY,INJECTION				4				
5	2	114250-53080	NUT, NOZZLE D16.95				4				
9	2	114250-53120	SPRING, NOZZLE				4				
10	2	114250-53130	SEAT, SPRING				4				
11	2	114250-53140	PLATE				4				
12	2	114250-53210	PIN				8				
13	2	114250-53400	SHIM SET				4				
14	1	129550-59120	RETAINER, PIPE				1				
14-1	1	129150-59120	RETAINER, PIPE (D=E/# 19089)				2			N	
17	2	129150-59130	BOLT, M4X12				2				
17-1	2	129150-59131	BOLT, M4X14 (D=E/# 19089)				4			S	
18	2	129400-59810	PIPE ASSY, INJECTION				1				
19	2	129400-59820	PIPE ASSY, INJECTION				1				
20	2	129400-59830	PIPE ASSY, INJECTION				1				
21	2	129400-59840	PIPE ASSY, INJECTION				1				

N:Old ←Yes/No→ New. Q:Old ←No/Yes→ New, R:Old ←Yes/Yes→ New, S:Old ←No/No→ New. W:Add. Z:Discontinued. F:Interchangeable by set. K:Q'ty Change

Copyright (C) YANMAR GLOBAL CS CO., LTD. All RightsReserved.

Fig.70. FUEL PIPE

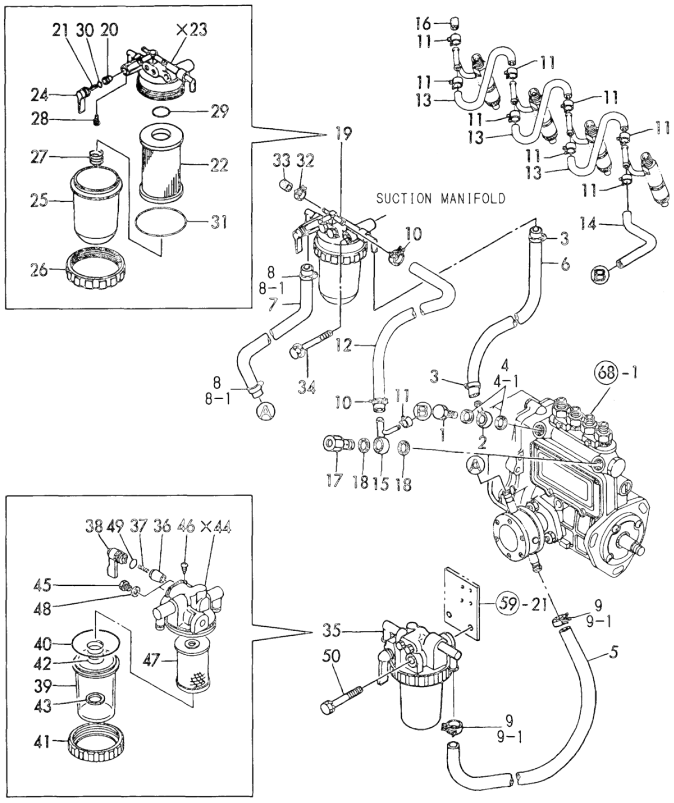

(A)=3TN66E-GB2
(B)=3TNA72E-GB2
(C)=3TN84E-GB2
(D)=4TN84E-GB2
(E)=
(F)=

No.	Lev.	Parts No.	Description	Q'ty (A)	(B)	(C)	(D)	(E)	(F)	I	R
1	1	103854-39140	BOLT, PIPE JOINT				1				
2	1	101304-59020	JOINT, PIPE 12				1				
3	1	124766-59050	CLIP, HOSE 12				2				
4	1	104200-59170	GASKET, 12				2				
4-1	1	22190-120002	WASHER, SEAL 12 (D=E/# 25211)				2			N	A
5	1	105025-59510	PIPE, FUEL				1				
6	1	129555-59510	PIPE, D13/7.5X180				1				
7	1	105025-59530	PIPE, FUEL D13X400				1				
8	1	23000-013000	CLAMP, 13				2				
8-1	1	124766-59050	CLIP, HOSE 12 (D=E/# 08161)				2			R	
9	1	23000-013000	CLAMP, 13				2				
9-1	1	124766-59050	CLIP, HOSE 12 (D=E/# 08161)				2			R	
10	1	124766-59050	CLIP, HOSE 12				2				
11	1	124066-59100	CLIP, HOSE 8				9				
12	1	105025-59530	PIPE, FUEL D13X400				1				
13	1	121250-59550	PIPE, FUEL D8X120				3				
14	1	119840-59560	PIPE, FUEL RETURN				1				
15	1	119840-59570	JOINT				1				
16	1	129150-59580	CAP				1				
17	1	129100-59951	VALVE ASSY, CHECK				1				
18	1	23414-120000	GASKET, 12X1.0				2				A
19	1	129100-55621	FILTER ASSY, FUEL				1				
20	2	104200-55321	VALVE, TAPER				1				
21	2	104200-55330	SPRING, VALVE				1				
22	2	129100-55650	ELEMENT				1				
24	2	129100-55670	LEVER				1				
25	2	129100-55680	CUP, STRAINER				1				
26	2	129100-55690	RING, RETAINING				1				
27	2	129100-55700	SPRING				1				
28	2	104200-55750	SCREW, M4				1				
29	2	24311-000160	O-RING, 1AP16.0				1				
30	2	24311-240100	O-RING, 1AP10A				1				
31	2	24321-000650	O-RING, 1AG65.0				1				
32	1	124066-59100	CLIP, HOSE 8				1				
33	1	129150-59580	CAP				1				
34	1	26014-080702	BOLT, M8X 70				1				
35	1	129335-55700	SEPARATOR ASSY,WATER				1				
36	2	104200-55321	VALVE, TAPER				1				
37	2	104200-55330	SPRING, VALVE				1				
38	2	104200-55341	HANDLE				1				
39	2	124064-55510	COVER				1				
40	2	102103-55520	O-RING				1				
41	2	110250-55610	RING, RETAINING				1				
42	2	121257-55720	SPRING				1				
43	2	121257-55731	FLOAT				1				
45	2	101720-55750	PLUG, 6				2				
46	2	104200-55750	SCREW, M4				1				
47	2	171081-55910	SCREEN				1				

Remarks
(A) THIS PART IS ALSO SOLD BY GASKET SET(FIG 76.REF NO.1-1,P/# 729419 -92601).

N:Old ◄Yes/No► New. Q:Old ◄No/Yes► New. R:Old ◄Yes/Yes► New. S:Old ◄No/No► New. W:Add. Z:Discontinued. F:Interchangeable by set. K:Q'ty Change

++ CONTINUE ++

Copyright (C) YANMAR GLOBAL CS CO., LTD. All RightsReserved.

Fig.70. FUEL PIPE

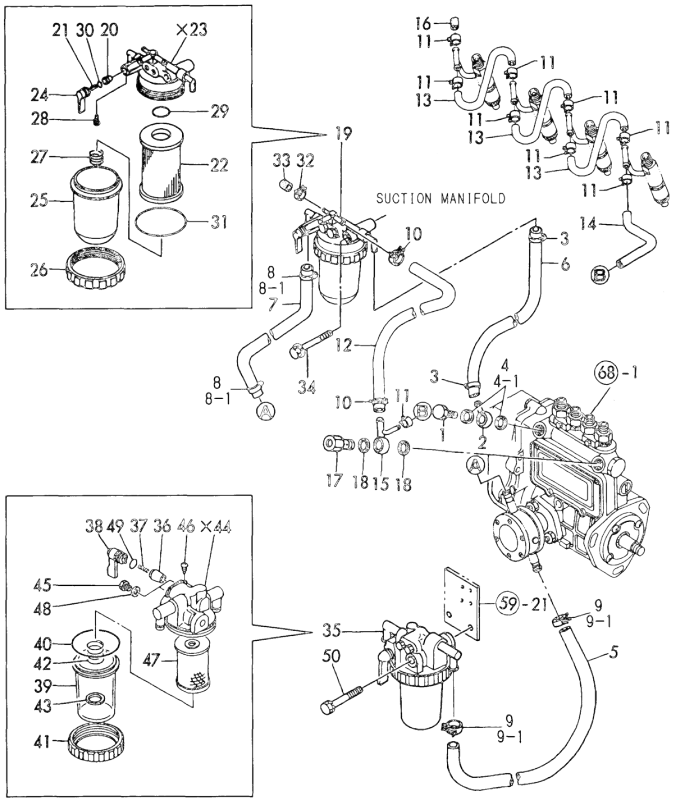

Remarks
(A) THIS PART IS ALSO SOLD BY GASKET SET(FIG 76.REF NO.1-1,P/# 729419 -92601).

(A)=3TN66E-GB2
(B)=3TNA72E-GB2
(C)=3TN84E-GB2
(D)=4TN84E-GB2
(E)=
(F)=

No.	Lev.	Parts No.	Description	Q'ty (A)	(B)	(C)	(D)	(E)	(F)	I	R
48	2	23418-060000	GASKET, 6X1.0				2				
49	2	24311-240100	O-RING, 1AP10A				1				
50	1	26014-080702	BOLT, M8X 70				1				

N:Old ←Yes/No→ New. Q:Old ←No/Yes→ New. R:Old ←Yes/Yes→ New. S:Old ←No/No→ New. W:Add. Z:Discontinued. F:Interchangeable by set. K:Q'ty Change

Copyright (C) YANMAR GLOBAL CS CO., LTD. All RightsReserved.

Fig.71. GOVERNOR

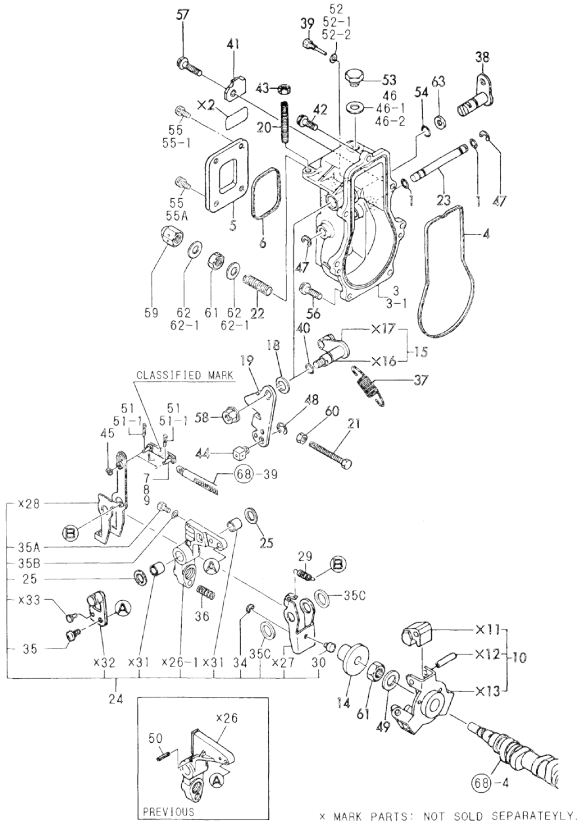

(A)=3TN66E-GB2
(B)=3TNA72E-GB2
(C)=3TN84E-GB2
(D)=4TN84E-GB2
(E)=
(F)=

No.	Lev.	Parts No.	Description	Q'ty (A)	(B)	(C)	(D)	(E)	(F)	I	R
1	1	129155-51280	O-RING, S6				2				
3	1	119843-61011	CASE, GOVERNOR				1				
3-1	1	129155-61012	CASE, GOVERNOR				1				N
			(D=E/# 11881)								
4	1	129155-61050	GASKET				1				
5	1	129155-61060	COVER, GOVERNOR CASE				1				
6	1	129155-61070	GASKET				1				
7	1	129155-61120	LINK, L=30 MARK 0				1				1
8	1	129155-61130	LINK, L=31 MARK 1				1				1
9	1	129155-61140	LINK, L=30.5 MARK 05				1				1
10	1	129155-61201	WEIGHT ASSY,GOVERNOR				1				
14	1	129155-61341	SLEEVE				1				
15	1	129100-61400	SHAFT ASSY				1				
18	1	129155-61430	SPACER				1				
19	1	129100-61440	LEVER, CONTROL				1				
20	1	129155-61450	BOLT, LIMITER				1				
21	1	129155-61460	BOLT, IDLE				1				
22	1	129155-61470	BOLT, CONTROL				1				
23	1	129155-61490	SHAFT				1				
24	1	129116-61500	LEVER ASSY, GOVERNOR				1				
25	2	174307-51700	SHIM SET				2				
29	2	119843-61540	SPRING, SET				1				
30	2	129155-61540	SHIFTER				1				
34	2	22272-000040	RING, E- 4				1				
35	2	26022-060122	SCREW, M6X12				1				
35A	2	26113-050082	BOLT, M5X 8				1				W
			(D=E/# 19662)								
35B	2	22217-050000	WASHER, SPRING 5				1				W
			(D=E/# 19662)								
35C	2	129155-61480	SPACER ASSY				2				W
			(D=EXXX)								
36	1	129500-61650	SPRING, FUEL CONTROL				1				
37	1	129500-61700	SPRING, GOVERNOR				1				
38	1	129116-61803	LEVER, STOP				1				
39	1	129155-61810	PIN				1				
40	1	129155-61830	O-RING, S10				1				
41	1	129116-61890	SUPPORT				1				
42	1	129155-61950	BOLT				1				
43	1	124550-66370	NUT, M6				1				
44	1	124756-67510	RETAINER				1				
45	1	22117-040000	WASHER, 4				1				
46	1	22190-100000	WASHER, SEAL 10				1				
46-1	1	43400-500430	SEAL WASHER 10S				1				R
			(D=E/# 01405)								
46-2	1	22190-100002	WASHER, SEAL 10				1				N
			(D=E/# 20467)								
47	1	22272-000060	RING, E- 6				2				
48	1	22272-000070	RING, E- 7				1				
49	1	22287-120000	WASHER, 12				1				
50	1	22351-030016	PIN, SPRING 3.0X16				1				Z
			(D=EXXX)								

Remarks
(1) SELECTIVE PARTS:CERTAIN THE CLASSIFICATION MARK, THEN PLACE YOUR ORDER. (ILLUSTRATION)

N:Old ←Yes/No→ New. Q:Old ←No/Yes→ New. R:Old ←Yes/Yes→ New. S:Old ←No/No→ New. W:Add. Z:Discontinued. F:Interchangeable by set. K:Q'ty Change

++ CONTINUE ++

Copyright (C) YANMAR GLOBAL CS CO., LTD. All RightsReserved.

Fig.71. GOVERNOR

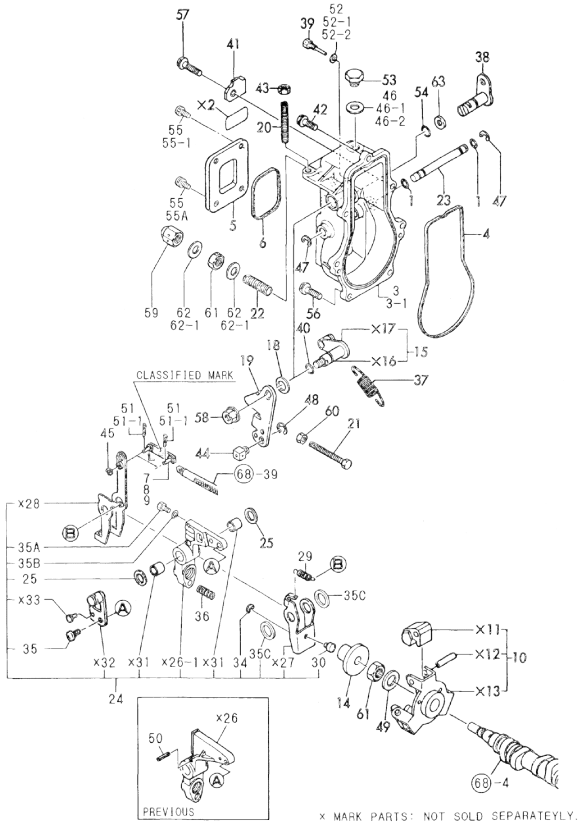

(A)=3TN66E-GB2
(B)=3TNA72E-GB2
(C)=3TN84E-GB2
(D)=4TN84E-GB2
(E)=
(F)=

No.	Lev.	Parts No.	Description	Q'ty (A)	(B)	(C)	(D)	(E)	(F)	I	R
51	1	22360-040000	PIN, SNAP 4				2				
51-1	1	22372-040000	PIN, SNAP 4 (D=E/# 06170)				2				R
52	1	23414-050000	GASKET, 5X1.0				1				
52-1	1	43400-500390	SEAL WASHER 6S (D=E/# 00899)				1				N
52-2	1	22190-060002	WASHER, SEAL 6 (D=E/# 20467)				1				N
53	1	23887-100002	PLUG, 10				1				
54	1	24311-240100	O-RING, 1AP10A				1				
55	1	26022-050102	SCREW, M5X10				4				
55-1	1	26022-050102	SCREW, M5X10 (D=E/# 13257)				2				K
55A	1	26023-050102	SCREW, M5X10 (D=E/# 13257)				2				W
56	1	26106-060202	BOLT, M6X 20 PLATED				5				
57	1	26106-060252	BOLT, M6X 25 PLATED				1				
58	1	26366-080002	NUT, M8				1				
59	1	26687-120002	NUT, CAP M12				1				
60	1	26756-060002	NUT, LOCK M6				1				
61	1	26776-120002	NUT, LOCK M12				2				
62	1	43400-500450	SEAL WASHER 12S				2				
62-1	1	22190-120002	WASHER, SEAL 12 (D=E/# 20467)				2				N
63	1	131110-66420	WASHER (D=EXXX)				1				W

Remarks
(1) SELECTIVE PARTS:CERTAIN THE CLASSIFICATION MARK, THEN PLACE YOUR ORDER. (ILLUSTRATION)

N:Old ←Yes/No→ New. Q:Old ←No/Yes→ New. R:Old ←Yes/Yes→ New. S:Old ←No/No→ New. W:Add. Z:Discontinued. F:Interchangeable by set. K:Q'ty Change

Copyright (C) YANMAR GLOBAL CS CO., LTD. All RightsReserved.

Fig.72. ENGINE STOP DEVICE

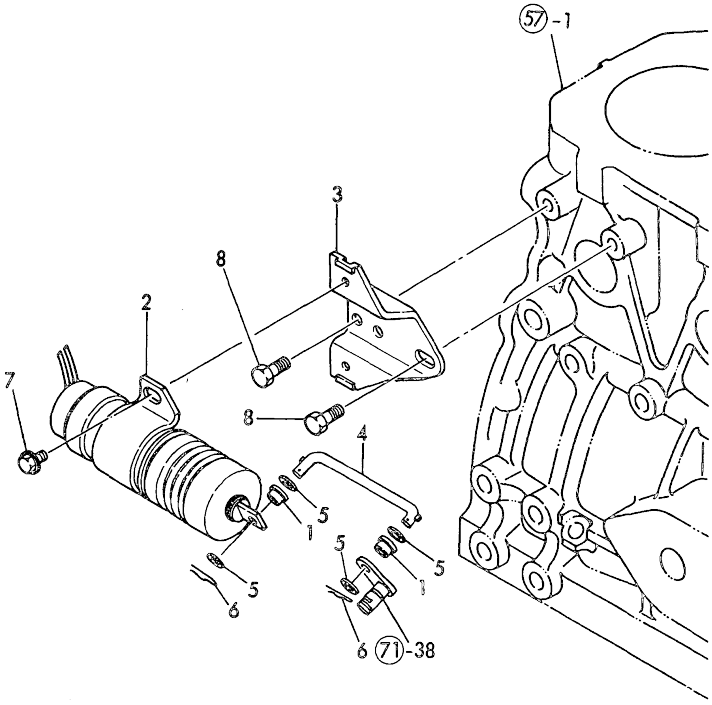

(A)=3TN66E-GB2
(B)=3TNA72E-GB2
(C)=3TN84E-GB2
(D)=4TN84E-GB2
(E)=
(F)=

No.	Lev.	Parts No.	Description	Q'ty (A)	(B)	(C)	(D)	(E)	(F)	I	R
1	1	119245-66400	BUSH				2				
2	1	129155-66800	SOLENOID				1				
3	1	129155-66811	BRACKET, SOLENOID				1				
4	1	129555-66822	LINK				1				
5	1	22137-040000	WASHER, 4				4				
6	1	22360-040000	PIN, SNAP 4				2				
7	1	26106-060102	BOLT, M6X 10 PLATED				2				
8	1	26106-080122	BOLT, M8X 12 PLATED				2				

N:Old ◄Yes/No► New. Q:Old ◄No/Yes► New, R:Old ◄Yes/Yes► New, S:Old ◄No/No► New, W:Add, Z:Discontinued, F:Interchangeable by set, K:Q'ty Change

Copyright (C) YANMAR GLOBAL CS CO., LTD. All RightsReserved.

Fig.73. STARTING MOTOR

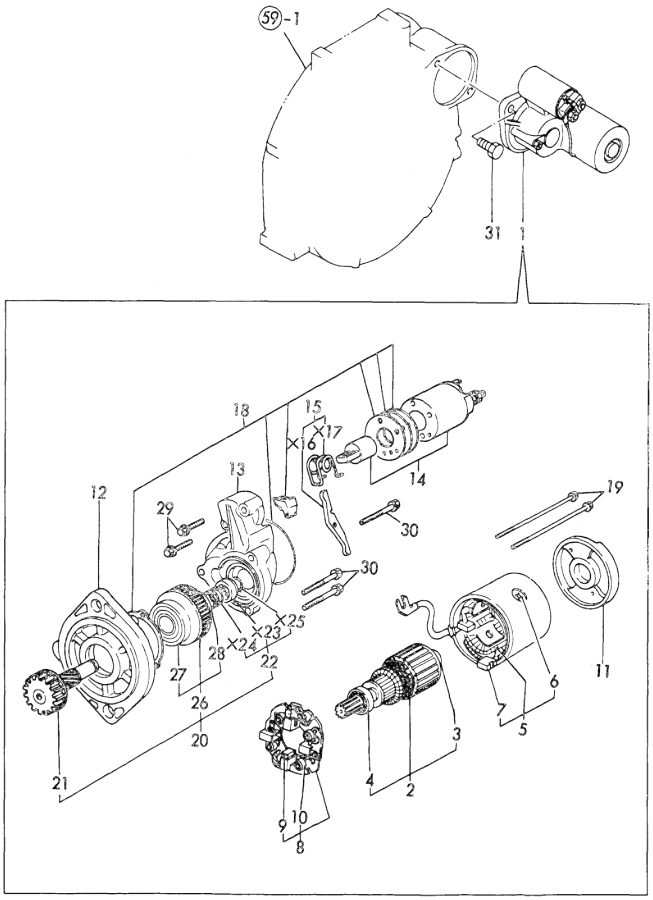

(A)=3TN66E-GB2
(B)=3TNA72E-GB2
(C)=3TN84E-GB2
(D)=4TN84E-GB2
(E)=
(F)=

No.	Lev.	Parts No.	Description	Q'ty (A)	(B)	(C)	(D)	(E)	(F)	I	R
1	1	129400-77010	STARTER, S13-94				1				
1-1	1	129400-77011	STARTER, S13-94A (D=E/# 03645)				1			N	
2	2	129400-77400	ARMATURE ASSY				1				
2-1	2	129400-77401	ARMATURE ASSY (D=E/# 03645)				1			N	
3	3	171008-77410	BEARING				1				
4	3	171008-77420	BEARING				1				
5	2	129400-77440	COIL ASSY, FIELD				1				
6	3	171008-77450	SCREW				4				
7	3	129400-77460	BRUSH (+)				2				
8	2	129400-77470	HOLDER ASSY, BRUSH				1				
9	3	129400-77480	BRUSH (-)				2				
10	3	129400-77490	SPRING				4				
11	2	129400-77510	COVER, REAR				1				
12	2	171008-77510	CASE, GEAR				1				
13	2	129400-77520	HOUSING				1				
14	2	129400-77530	SWITCH ASSY,MAGNETIC				1				
15	2	171008-77540	LEVER SET				1				
18	2	129400-77570	COVER KIT, DUST				1				
18-1	2	129400-77571	COVER ASSY, DUST (D=E/# 03645)				1			N	
19	2	129400-77640	BOLT, THROUGH				2				
20	2	171008-77650	PINION ASSY				1				
21	3	171008-77660	SHAFT				1				
22	3	171008-77670	STOPPER SET				1				
26	3	171008-77720	CLUTCH ASSY				1				
27	4	171008-77730	BEARING, BALL				1				
28	4	171008-77740	BEARING				1				
29	2	26106-060322	BOLT, M6X 32 PLATED				2				
30	2	26106-060402	BOLT, M6X 40 PLATED				3				
31	1	26116-120252	BOLT, M12X 25 PLATED				2				

N:Old $\frac{\text{Yes}}{\text{No}}$ New. Q:Old $\frac{\text{No}}{\text{Yes}}$ New. R:Old $\frac{\text{Yes}}{\text{Yes}}$ New. S:Old $\frac{\text{No}}{\text{No}}$ New. W:Add. Z:Discontinued. F:Interchangeable by set. K:Q'ty Change

Copyright (C) YANMAR GLOBAL CS CO., LTD. All RightsReserved.

Fig.74. GENERATOR

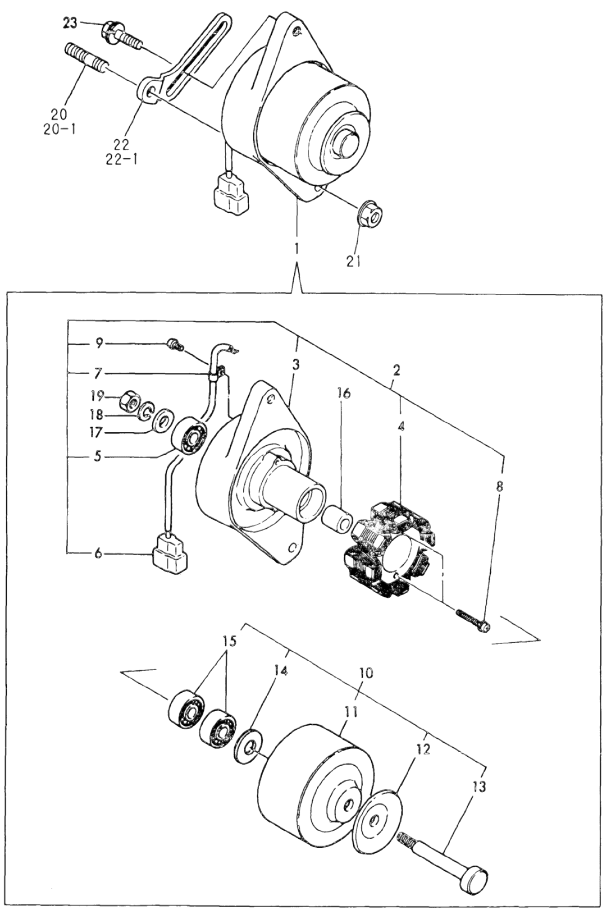

(A)=3TN66E-GB2
(B)=3TNA72E-GB2
(C)=3TN84E-GB2
(D)=4TN84E-GB2
(E)=
(F)=

No.	Lev.	Parts No.	Description	Q'ty (A)	(B)	(C)	(D)	(E)	(F)	I	R
1	1	171301-77201	DYNAMO ASSY, 15A				1				
2	2	XM08137	PLATE ASSY				1				
3	3	XM08138	PLATE				1				
4	3	XM08180	STATOR SET				1				
5	3	XM27436	BEARING, BALL				1				
6	3	XM17878	COUPLER				1				
7	3	XM36410	CLAMP				1				
8	3	26022-040252	SCREW, M4X25				2				
9	3	XYSPS4008	SCREW				1				
10	2	XM82184	FLYWHEEL ASSY				1				
11	3	XM82110	FLYWHEEL				1				
12	3	XM72174	PULLEY				1				
13	3	XM72664	SHAFT				1				
14	3	XM37336	WASHER				1				
15	3	XM27436	BEARING, BALL				2				
16	2	106383-44720	SPACER				1				
17	2	106383-44730	WASHER				1				
18	2	22212-100000	SPRING WASHER 10				1				
19	2	26716-100002	NUT, M10				1				
20	1	121450-01570	STUD				1				
20-1	1	129795-01900	STUD				1			N	
			(D=E/# 25062)								
21	1	26366-100002	NUT, M10				1				
22	1	129400-77330	ADJUSTER				1				
22-1	1	129410-77330	ADJUSTER				1			N	
			(D=E/# 25234)								
23	1	26014-080252	BOLT, M8X 25				1				

N:Old ◄Yes/No► New. Q:Old ◄No/Yes► New. R:Old ◄Yes/Yes► New. S:Old ◄No/No► New. W:Add. Z:Discontinued. F:Interchangeable by set. K:Q'ty Change

Copyright (C) YANMAR GLOBAL CS CO., LTD. All RightsReserved.

Fig.75. ELECTRIC PART

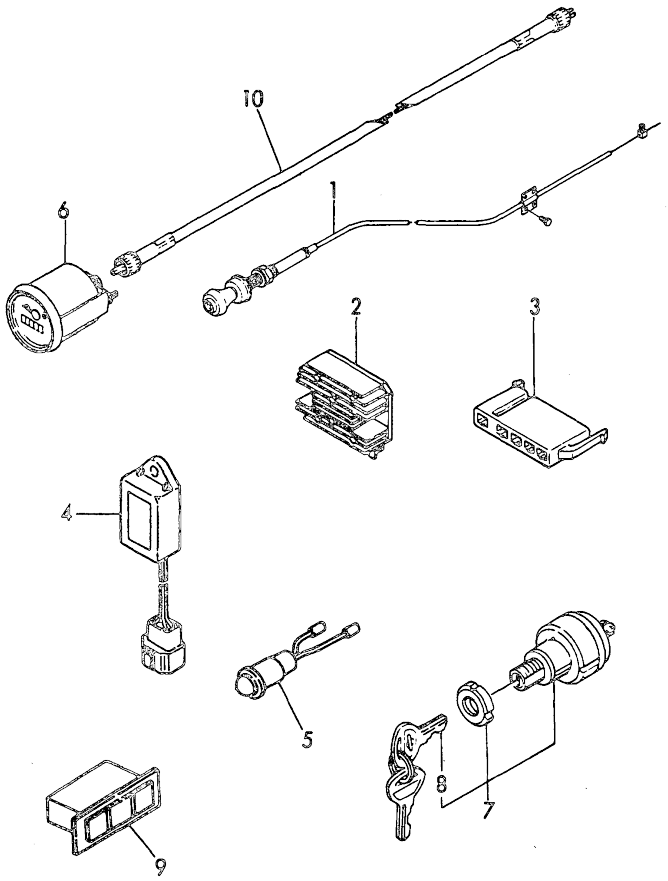

(A)=3TN66E-GB2
(B)=3TNA72E-GB2
(C)=3TN84E-GB2
(D)=4TN84E-GB2
(E)=
(F)=

No.	Lev.	Parts No.	Description	Q'ty (A)	(B)	(C)	(D)	(E)	(F)	I	R
1	1	170029-67100	CABLE, PUSH-PULL				1				
2	1	119660-77710	LIMITER, CURRENT 15A				1				
3	1	171301-77720	COUPLER				1				
4	1	128300-77920	TIMER				1				
5	1	124732-77970	LAMP, PILOT				1				
6	1	171080-91100	TACHOMETER				1				
7	1	121400-91251	SWITCH, STARTER				1				
8	2	121400-91271	KEY, SWITCH				2				
9	1	170038-91310	LAMP				1				
10	1	42130-502220	CABLE, TACHOMETER				1				

N:Old ←Yes/No→ New. Q:Old ←No/Yes→ New. R:Old ←Yes/Yes→ New. S:Old ←No/No→ New. W:Add. Z:Discontinued. F:Interchangeable by set. K:Q'ty Change

Copyright (C) YANMAR GLOBAL CS CO., LTD. All RightsReserved.

Fig.76. GASKET SET(OPTIONAL) & TOOL

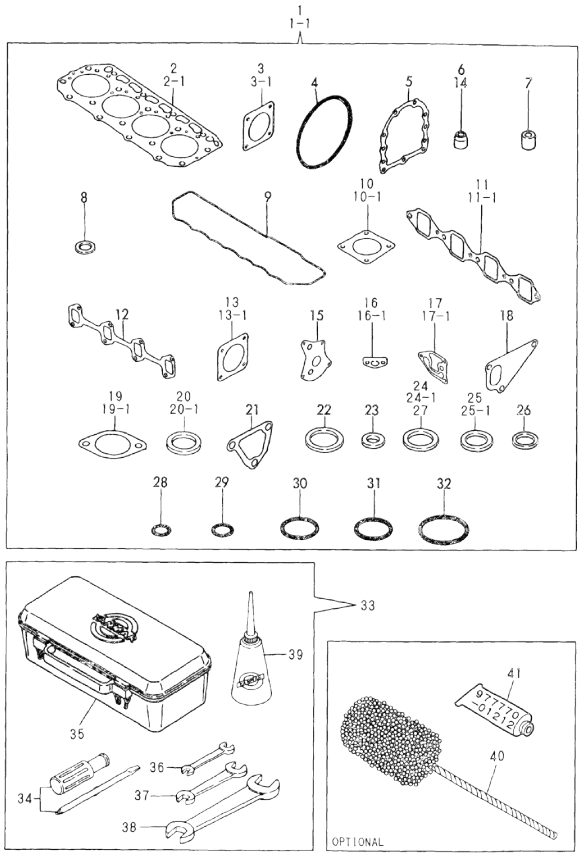

(A)=3TN66E-GB2
(B)=3TNA72E-GB2
(C)=3TN84E-GB2
(D)=4TN84E-GB2
(E)=
(F)=

No.	Lev.	Parts No.	Description	Q'ty (A)	(B)	(C)	(D)	(E)	(F)	I	R
1	1	729419-92600	GASKET SET				1				1
1-1	1	729419-92601	GASKET SET				1			N	1
			(D=E/# 02047)								
2	2	129405-01330	GASKET, HEAD				1				
2-1	2	129405-01331	GASKET, HEAD				1			R	
			(D=E/# 20647)								
3	2	124240-01882	GASKET				1				
3-1	2	124240-01883	GASKET				1			R	
			(D=E/# 02047)								
4	2	121850-51960	O-RING				1				
5	2	129150-01660	GASKET				1			Z	
			(D=FROM 1ST)								
6	2	124460-11340	SEAL, VALVE STEM				4				
7	2	119625-11870	PROTECTOR, NOZZLE				4				
8	2	119625-11880	SEAT, NOZZLE				4				
9	2	129550-11310	GASKET, BONNET				1				
10	2	129150-77510	GASKET				1				
10-1	2	129150-77511	GASKET				1			N	
			(D=E/# 03645)								
11	2	129550-12110	GASKET, MANIFOLD				1				
11-1	2	129550-12111	GASKET, MANIFOLD				1			N	
			(D=E/# 03645)								
12	2	129550-13110	GASKET				1				
13	2	129400-13200	GASKET, SILENCER				1				
13-1	2	129400-13201	GASKET, SILENCER				1			N	
			(D=E/# 03645)								
14	2	121400-11340	SEAL, VALVE STEM				4				
15	2	129150-32020	GASKET, PUMP				1				
16	2	129150-35040	GASKET				1				
16-1	2	129150-35041	GASKET				1			N	
			(D=E/# 03645)								
17	2	129103-35121	GASKET				1				
17-1	2	129103-35122	GASKET				1			N	
			(D=E/# 03645)								
18	2	129100-42020	GASKET, WATER PUMP				1				
19	2	129795-49550	GASKET				1				
19-1	2	129795-49551	GASKET				1			N	
			(D=E/# 03645)								
20	2	129150-49810	GASKET, THERMOSTAT				1				
20-1	2	129150-49811	GASKET, THERMOSTAT				1			N	
			(D=E/# 03645)								
21	2	129100-49840	GASKET				1				
22	2	124465-44950	GASKET, 16				2				
23	2	129155-52050	GASKET				1				
24	2	104200-59170	GASKET, 12				2				
24-1	2	22190-120002	WASHER, SEAL 12				2			N	
			(D=E/# 25211)								
25	2	43400-500410	SEAL WASHER 8S				2				
25-1	2	22190-080002	WASHER, SEAL 6				2			R	
			(D=E/# 20467)								
26	2	23414-100000	GASKET, 10X1.0				2				

Remarks
(1) OPTIONAL PART.

N:Old ◄Yes/No► New. Q:Old ◄No/Yes► New. R:Old ◄Yes/Yes► New. S:Old ◄No/No► New. W:Add. Z:Discontinued. F:Interchangeable by set. K:Q'ty Change

++ CONTINUE ++

Copyright (C) YANMAR GLOBAL CS CO., LTD. All RightsReserved.

Fig.76. GASKET SET(OPTIONAL) & TOOL

(A)=3TN66E-GB2
(B)=3TNA72E-GB2
(C)=3TN84E-GB2
(D)=4TN84E-GB2
(E)=
(F)=

No.	Lev.	Parts No.	Description	Q'ty (A)	(B)	(C)	(D)	(E)	(F)	I	R
27	2	23414-120000	GASKET, 12X1.0				2				
28	2	24311-000120	O-RING, 1AP12.0				3				
29	2	24311-000160	O-RING, 1AP16.0				2				
30	2	24311-000320	O-RING, 1AP32.0				1				
31	2	24341-000240	O-RING, 1AS24.0				1				
32	2	24341-000500	O-RING, 1AS50.0				1				
33	1	171001-93100	BOX, TOOL				1				
34	2	104200-92350	DRIVER, SCREW				1				
35	2	104200-92600	BOX, TOOL				1				
36	2	28110-100120	SPANNER, 10X12				1				
37	2	28110-140170	SPANNER, 14X17				1				
38	2	28110-190220	SPANNER, 19X22				1				
39	2	28210-000140	OILER				1				
40	1	129400-92420	HONE				1				1
41	1	977770-01212	GASKET, LIQUID				1				1

Remarks
(1) OPTIONAL PART.

N:Old ←Yes/No→ New. Q:Old ←No/Yes→ New, R:Old ←Yes/Yes→ New. S:Old ←No/No→ New. W:Add. Z:Discontinued. F:Interchangeable by set. K:Q'ty Change

Copyright (C) YANMAR GLOBAL CS CO., LTD. All RightsReserved.

Fig.77. GENERATOR

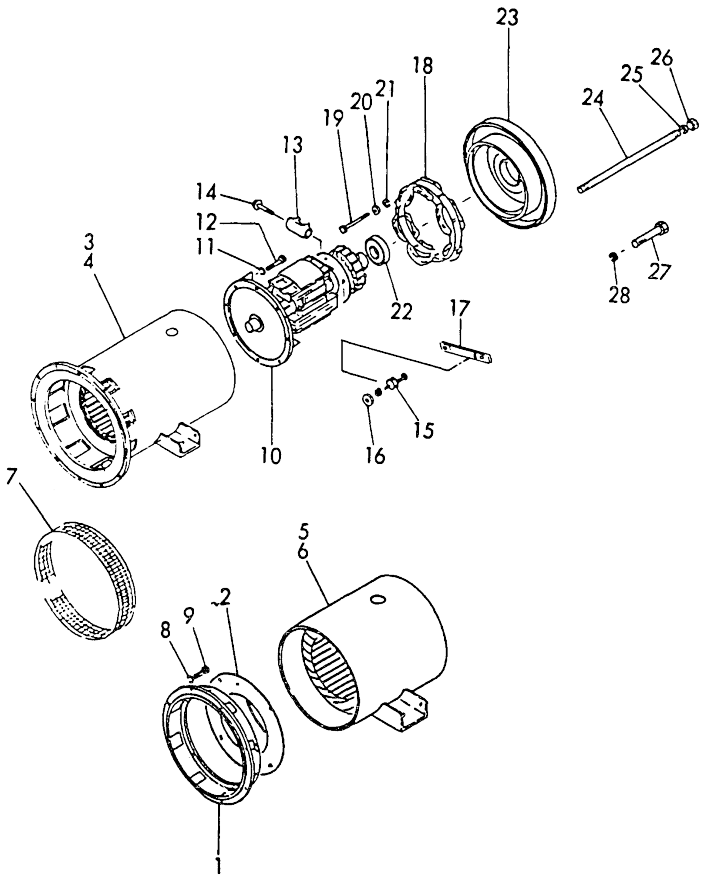

(A)=YEG12H (B)=YEG15H (C)=YEG25H (D)=YEG35H (E)= (F)=

No.	Lev.	Parts No.	Description	Q'ty (A)	(B)	(C)	(D)	(E)	(F)	I	R
1	1	982112-00120	HOUSING			1	1				
2	1	982112-20150	GUIDE, AIR			1	1				
3A	1	982174-80550	STATOR, 50HZ/200V	1							
3A-1	1	982174-80551	STARTER ASSY	1						S	
	(A=G/# 11071)										
3B	1	982174-80560	STATOR, 50HZ/220V	1							
3B-1	1	982174-80561	STATOR, 50HZ/220V	1						S	
	(A=G/# 11071)										
3C	1	982174-80570	STATOR, 50HZ/380V	1							
3C-1	1	982174-80571	STATOR, 50HZ/380V	1						S	
	(A=G/# 11071)										
3D	1	982174-80580	STATOR, 50HZ/400V	1							
3D-1	1	982174-80581	STATOR, 50HZ/400V	1						S	
	(A=G/# 11071)										
3E	1	982174-80590	STATOR, 50HZ/415V	1							
3E-1	1	982174-80591	STATOR, 50HZ/415V	1						S	
	(A=G/# 11071)										
3F	1	982174-80600	STATOR, 60HZ/220V	1							
3F-1	1	982174-80601	STATOR, 60HZ/220V	1						S	
	(A=G/# 11071)										
3G	1	982174-80610	STATOR, 60HZ/380V	1							
3G-1	1	982174-80611	STATOR, 60HZ/380V	1						S	
	(A=G/# 11071)										
3H	1	982174-80620	STATOR, 60HZ/440V	1							
3H-1	1	982174-80621	STATOR, 60HZ/440V	1						S	
	(A=G/# 11071)										
3I	1	982174-80630	STATOR, 60HZ/480V	1							
3I-1	1	982174-80631	STATOR, 60HZ/480V	1						S	
	(A=G/# 11071)										
4A	1	982174-80640	STATOR, 50HZ/200V		1						
4A-1	1	982174-80641	STATOR, 50HZ/200V		1					S	
		(B=G/# 21397)									
4B	1	982174-80650	STATOR SET(50HZ/220V		1						
4B-1	1	982174-80651	STATOR, 50HZ/220V		1					S	
		(B=G/# 21397)									
4C	1	982174-80660	STATOR SET(50HZ/380V		1						
4C-1	1	982174-80661	STATOR, 50HZ/380V		1					S	
		(B=G/# 21397)									
4D	1	982174-80670	STATOR, 50HZ/400V		1						
4D-1	1	982174-80671	STATOR, 50HZ/400V		1					S	
		(B=G/# 21397)									
4E	1	982174-80680	STATOR, 50HZ/415V		1						
4E-1	1	982174-80681	STATOR, 50HZ/415V		1					S	
		(B=G/# 21397)									
4F	1	982174-80690	STATOR, 60HZ/220V		1						
4F-1	1	982174-80691	STATOR, 60HZ/220V		1					S	
		(B=G/# 21397)									
4G	1	982174-80700	STATOR, 60HZ/380V		1						
4G-1	1	982174-80701	STATOR, 60HZ/380V		1					S	
		(B=G/# 21397)									
4H	1	982174-80710	STATOR, 60HZ/440V		1						

N:Old ←Yes/No→ New. Q:Old ←No/Yes→ New. R:Old ←Yes/Yes→ New. S:Old ←No/No→ New. W:Add. Z:Discontinued. F:Interchangeable by set. K:Q'ty Change

++ CONTINUE ++

Copyright (C) YANMAR GLOBAL CS CO., LTD. All RightsReserved.

Fig.77. GENERATOR

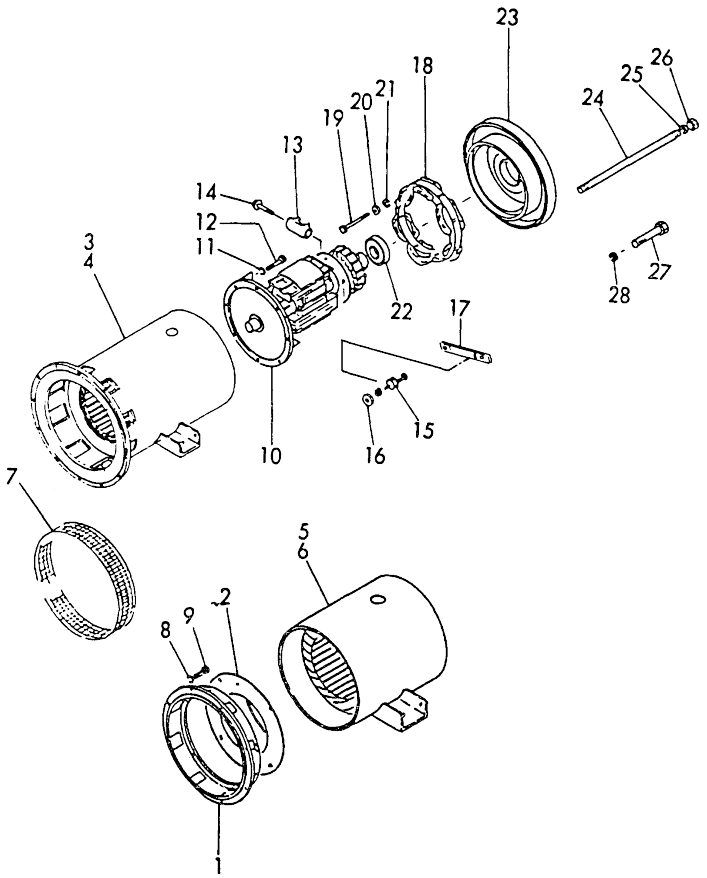

(A)=YEG12H (D)=YEG35H
(B)=YEG15H (E)=
(C)=YEG25H (F)=

No.	Lev.	Parts No.	Description	Q'ty (A)	(B)	(C)	(D)	(E)	(F)	I	R
4H-1	1	982174-80711	STATOR, 60HZ/440V		1					S	
		(B=G/# 21397)									
4I	1	982174-80720	STATOR, 60HZ/480V		1						
4I-1	1	982174-80721	STATOR, 60HZ/480V		1					S	
		(B=G/# 21397)									
5A	1	982174-80730	STATOR, 50HZ/200V			1					
5A-1	1	982174-80731	STATOR, 50HZ/200V			1				S	
			(C=G/# 21195)								
5B	1	982174-80740	STATOR, 50HZ/220V			1					
5B-1	1	982174-80741	STATOR, 50HZ/220V			1				S	
			(C=G/# 21195)								
5C	1	982174-80750	STATOR, 50HZ/380V			1					
5C-1	1	982174-80751	STATOR, 50HZ/380V			1				S	
			(C=G/# 21195)								
5D	1	982174-80760	STATOR, 50HZ/400V			1					
5D-1	1	982174-80761	STATOR, 50HZ/400V			1				S	
			(C=G/# 21195)								
5E	1	982174-80770	STATOR, 50HZ/415V			1					
5E-1	1	982174-80771	STATOR, 50HZ/415V			1				S	
			(C=G/# 21195)								
5F	1	982174-80780	STATOR SET(60HZ/220V			1					
5F-1	1	982174-80781	STATOR, 60HZ/220V			1				S	
			(C=G/# 21195)								
5G	1	982174-80790	STATOR, 60HZ/380V			1					
5G-1	1	982174-80791	STATOR, 60HZ/380V			1				S	
			(C=G/# 21195)								
5H	1	982174-80800	STATOR, 60HZ/440V			1					
5H-1	1	982174-80801	STATOR, 60HZ/440V			1				S	
			(C=G/# 21195)								
5I	1	982174-80810	STATOR, 60HZ/480V			1					
5I-1	1	982174-80811	STATOR, 60HZ/480V			1				S	
			(C=G/# 21195)								
6A	1	982174-80820	STATOR, 50HZ/200V				1				
6A-1	1	982174-80821	STATOR, 50HZ/200V				1			S	
			(D=G/# 20659)								
6B	1	982174-80830	STATOR, 50HZ/220V				1				
6B-1	1	982174-80831	STATOR, 50HZ/220V				1			S	
			(D=G/# 20659)								
6C	1	982174-80840	STATOR, 50HZ/380V				1				
6C-1	1	982174-80841	STATOR, 50HZ/380V				1			S	
			(D=G/# 20659)								
6D	1	982174-80850	STATOR, 50HZ/400V				1				
6D-1	1	982174-80851	STATOR, 50HZ/400V				1			S	
			(D=G/# 20659)								
6E	1	982174-80860	STATOR SET(50HZ/415V				1				
6E-1	1	982174-80861	STATOR, 50HZ/415V				1			S	
			(D=G/# 20659)								
6F	1	982174-80870	STATOR, 60HZ/220V				1				
6F-1	1	982174-80871	STATOR, 60HZ/220V				1			S	
			(D=G/# 20659)								
6G	1	982174-80880	STATOR, 60HZ/380V				1				

N:Old ←Yes/No→ New. Q:Old ←No/Yes→ New. R:Old ←Yes/Yes→ New. S:Old ←No/No→ New. W:Add. Z:Discontinued. F:Interchangeable by set. K:Q'ty Change

++ CONTINUE ++

Copyright (C) YANMAR GLOBAL CS CO., LTD. All RightsReserved.

Fig.77. GENERATOR

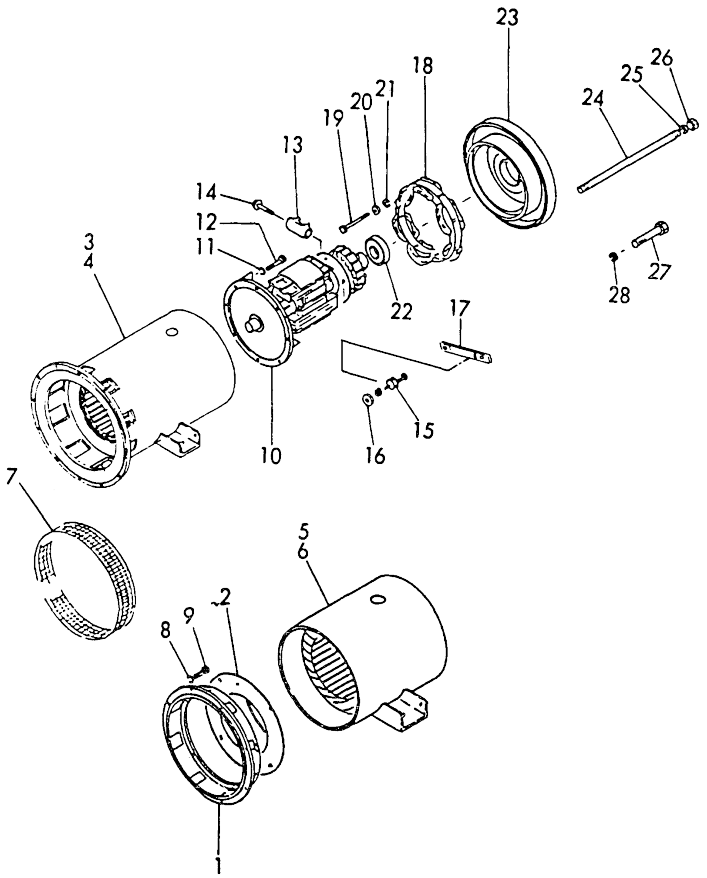

(A)=YEG12H (D)=YEG35H
(B)=YEG15H (E)=
(C)=YEG25H (F)=

No.	Lev.	Parts No.	Description	Q'ty (A)	(B)	(C)	(D)	(E)	(F)	I	R
6G-1	1	982174-80881	STATOR, 60HZ/380V				1			S	
			(D=G/# 20659)								
6H	1	982174-80890	STATOR, 60HZ/440V				1				
6H-1	1	982174-80891	STATOR, 60HZ/440V				1			S	
			(D=G/# 20659)								
6I	1	982174-80900	STATOR, 60HZ/480V				1				
6I-1	1	982174-80901	STATOR, 60HZ/480V				1			S	
			(D=G/# 20659)								
7A	1	982190-00010	GUARD	1	1						
7B	1	982190-00020	GUARD			1	1				
8	1	22217-100000	WASHER, SPRING 10	8	8	8	8				
9	1	26116-102502	BOLT, M10X250 PLATED	8	8	8	8				
10A	1	982116-90250	ROTOR SET	1							
10B	1	982116-90260	ROTER SET		1						
10C	1	982116-90270	ROTER SET			1					
10D	1	982116-90280	ROTER SET				1				
11	1	22217-080000	WASHER, SPRING 8	8	8	8	8				
12	1	982314-50835	BOLT, M8X35	8	8	8	8				
13	1	982117-10011	RESISTOR	1	1	1	1				
14	1	26557-040402	SCREW, M4X40	1	1	1	1				
15A	1	982512-10040	SILICON	4	4	4					
15B	1	982512-10050	SILICON	3	3	3					
15C	1	982512-10120	RECTIFIER				4				
15D	1	982512-10130	RECTIFIER				3				
16	1	982117-40010	WASHER	16	16	16	16				
17A	1	982111-90010	CONNECTOR	6	6						
17B	1	982111-90020	CONNECTOR			6	6				
18A	1	982110-90140	COIL, EXITER	1	1						
18B	1	982110-90090	COIL, FIELD			1					
18C	1	982110-90100	COIL, FIELD				1				
19A	1	26116-060402	BOLT, M6X 40 PLATED	6	6	6					
19B	1	26116-060502	BOLT, M6X 50 PLATED				6				
20	1	22217-060000	WASHER, SPRING 6	6	6	6	6				
21	1	22117-060000	WASHER, 6	6	6	6	6				
22	1	24107-063074	BEARING, BALL 6307ZZ	1	1	1	1				
23A	1	982110-20350	BRACKET	1	1						
23B	1	982110-20300	BRACKET			1	1				
24A	1	982118-10290	BOLT M10X450			4					
24B	1	982118-10100	BOLT, M10X510				4				
25	1	22217-100000	WASHER, SPRING 10			4	4				
26	1	26716-100002	NUT, M10			4	4				
27	1	26116-100602	BOLT, M10X 60 PLATED	4	4						
28	1	22217-100000	WASHER, SPRING 10	4	4						

N:Old ←Yes/No→ New. Q:Old ←No/Yes→ New. R:Old ←Yes/Yes→ New. S:Old ←No/No→ New. W:Add. Z:Discontinued. F:Interchangeable by set. K:Q'ty Change

Copyright (C) YANMAR GLOBAL CS CO., LTD. All RightsReserved.

Fig.78. INSTRUMENT PANEL

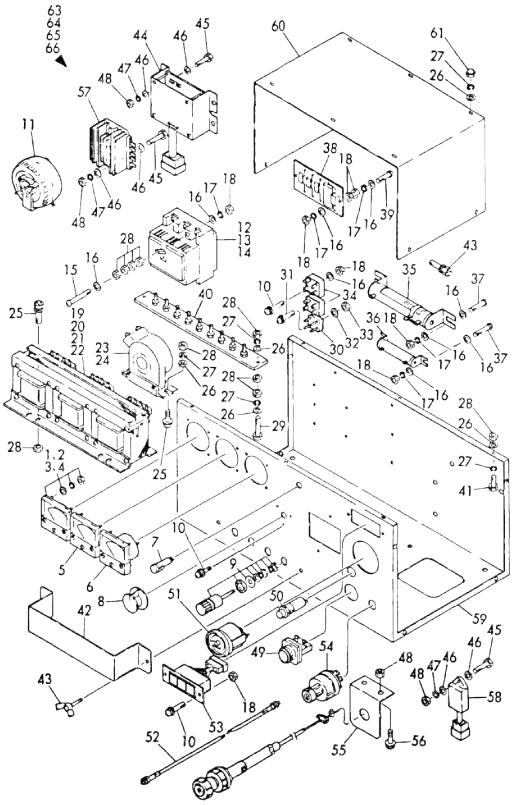

(A)=YEG12H (B)=YEG15H (C)=YEG25H (D)=YEG35H (E)= (F)=

No.	Lev.	Parts No.	Description	Q'ty (A)	(B)	(C)	(D)	(E)	(F)	I	R
1A	1	982515-60040	AMMETER	1							
1B	1	982515-60030	AMMETER	1							
1C	1	982515-60020	AMMETER	1							
1D	1	982515-60020	AMMETER	1							
1E	1	982515-60020	AMMETER	1							
1F	1	982515-60040	AMMETER	1							
1G	1	982515-60030	AMMETER	1							
1H	1	982515-60020	AMMETER	1							
1I	1	982515-60020	AMMETER	1							
2A	1	982515-60040	AMMETER		1						
2B	1	982515-60040	AMMETER		1						
2C	1	982515-60030	AMMETER		1						
2D	1	982515-60030	AMMETER		1						
2E	1	982515-60030	AMMETER		1						
2F	1	982515-60040	AMMETER		1						
2G	1	982515-60030	AMMETER		1						
2H	1	982515-60030	AMMETER		1						
2I	1	982515-60020	AMMETER		1						
3A	1	982515-60050	AMMETER			1					
3B	1	982515-60050	AMMETER			1					
3C	1	982515-60040	AMMETER			1					
3D	1	982515-60040	AMMETER			1					
3E	1	982515-60040	AMMETER			1					
3F	1	982515-60050	AMMETER			1					
3G	1	982515-60040	AMMETER			1					
3H	1	982515-60040	AMMETER			1					
3I	1	982515-60040	AMMETER			1					
4A	1	982515-60060	AMMETER				1				
4B	1	982515-60060	AMMETER				1				
4C	1	982515-60050	AMMETER				1				
4D	1	982515-60040	AMMETER				1				
4E	1	982515-60040	AMMETER				1				
4F	1	982515-60060	AMMETER				1				
4G	1	982515-60050	AMMETER				1				
4H	1	982515-60050	AMMETER				1				
4I	1	982515-60040	AMMETER				1				
5A	1	982510-50550	VOLTMETER	1	1	1	1				
5B	1	982510-50540	VOLTMETER	1	1	1	1				
6	1	982510-80056	METER, FREQUENCY	1	1	1	1				
7	1	982511-60020	LAMP	1	1	1	1				
8	1	982511-90020	KNOB	1	1	1	1				
9A	1	982513-80010	TERMINAL	3	3						
9B	1	982513-80020	TERMINAL	1	1						
9C	1	982513-80040	TERMINAL			3					
9D	1	982513-80060	TERMINAL			1					
9E	1	982513-80010	TERMINAL			3					
9F	1	982513-80020	TERMINAL			1					
9G	1	982513-80130	TERMINAL				4				
9H	1	982513-80040	TERMINAL				3				
9I	1	982513-80060	TERMINAL				1				
10	1	982343-04015	SCREW M 4X15	7	7	7	7				

Remarks
(1) INCLUDE REF.NO.1-62 PARTS.
(2) INTERCHANGEABLE BY SIMULTANEOUS REPLACEMENT WITH NO.12-1 & NO. 59-1.

N:Old ←Yes/No→ New. Q:Old ←No/Yes→ New. R:Old ←Yes/Yes→ New. S:Old ←No/No→ New. W:Add. Z:Discontinued. F:Interchangeable by set. K:Q'ty Change

++ CONTINUE ++

Copyright (C) YANMAR GLOBAL CS CO., LTD. All RightsReserved.

Fig.78. INSTRUMENT PANEL

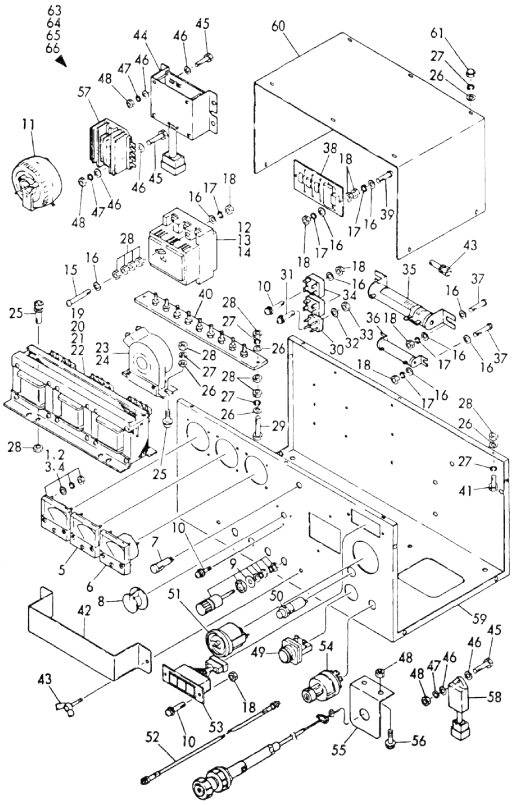

(A)=YEG12H (B)=YEG15H (C)=YEG25H (D)=YEG35H (E)= (F)=

No.	Lev.	Parts No.	Description	Q'ty (A)	(B)	(C)	(D)	(E)	(F)	I	R
11	1	982511-00020	REGULATOR, VOLTAGE	1	1	1	1				
12A	1	982512-50080	MAIN SWITCH(200V-32A	1							
12A-1	1	982512-50081	MAIN SWITCH(200V-32A	1						S	2
	(A=G/# 11071)										
12B	1	982512-50060	MAIN SWITCH(200,220V	1							
12B-1	1	982512-50061	SWITCH, MAIN 200-220	1						S	2
	(A=G/# 11071)										
12C	1	982512-50080	MAIN SWITCH(200V-32A	1							
12C-1	1	982512-50081	MAIN SWITCH(200V-32A	1						S	2
	(A=G/# 11071)										
12D	1	982512-50070	MAIN SWITCH(220V-24A	1							
12D-1	1	982512-50071	SWITCH, MAIN 220-24A	1						S	2
	(A=G/# 11071)										
12E	1	982512-40090	SWITCH (16A), MAIN	1							
12E-1	1	982512-40091	SWITCH, MAIN 16A	1						S	2
	(A=G/# 11071)										
13A	1	982512-40260	SWITCH(50HZ/220V		1						
13A-1	1	982512-40261	SWITCH, 50HZ/200V		1					S	2
		(B=G/# 21397)									
13B	1	982512-40250	SWITCH, MAIN		1						
13B-1	1	982512-40251	SWITCH, MAIN		1					S	2
		(B=G/# 21397)									
13C	1	982512-50070	MAIN SWITCH(220V-24A		1						
13C-1	1	982512-50071	SWITCH, MAIN 220-24A		1					S	2
		(B=G/# 21397)									
13D	1	982512-40250	SWITCH, MAIN		1						
13D-1	1	982512-40251	SWITCH, MAIN		1					S	2
		(B=G/# 21397)									
13E	1	982512-50070	MAIN SWITCH(220V-24A		1						
13E-1	1	982512-50071	SWITCH, MAIN 220-24A		1					S	2
		(B=G/# 21397)									
13F	1	982512-40100	SWITCH (380), MAIN		1						
13F-1	1	982512-40101	SWITCH, MAIN 380V		1					S	2
		(B=G/# 21397)									
13G	1	982512-40330	SWITCH, 50HZ/200V			1					
13G-1	1	982512-40331	SWITCH, 50HZ/200V			1				S	2
		(C=G/# 21195)									
13H	1	982512-40250	SWITCH, MAIN			1					
13H-1	1	982512-40251	SWITCH, MAIN			1				S	2
		(C=G/# 21195)									
13I	1	982512-40330	SWITCH, 50HZ/200V			1					
13I-1	1	982512-40331	SWITCH, 50HZ/200V			1				S	2
		(C=G/# 21195)									
13J	1	982512-40260	SWITCH(50HZ/220V			1					
13J-1	1	982512-40261	SWITCH, 50HZ/200V			1				S	2
		(C=G/# 21195)									
13K	1	982512-40250	SWITCH, MAIN			1					
13K-1	1	982512-40251	SWITCH, MAIN			1				S	2
		(C=G/# 21195)									
14A	1	982512-40350	SWITCH, MAIN				1				
14A-1	1	982512-40351	SWITCH, MAIN				1			S	2

Remarks
(1) INCLUDE REF.NO.1-62 PARTS.
(2) INTERCHANGEABLE BY SIMULTANEOUS REPLACEMENT WITH NO.12-1 & NO. 59-1.

N:Old ←Yes/No→ New. Q:Old ←No/Yes→ New. R:Old ←Yes/Yes→ New. S:Old ←No/No→ New. W:Add. Z:Discontinued. F:Interchangeable by set. K:Q'ty Change

++ CONTINUE ++

Copyright (C) YANMAR GLOBAL CS CO., LTD. All RightsReserved.

Fig.78. INSTRUMENT PANEL

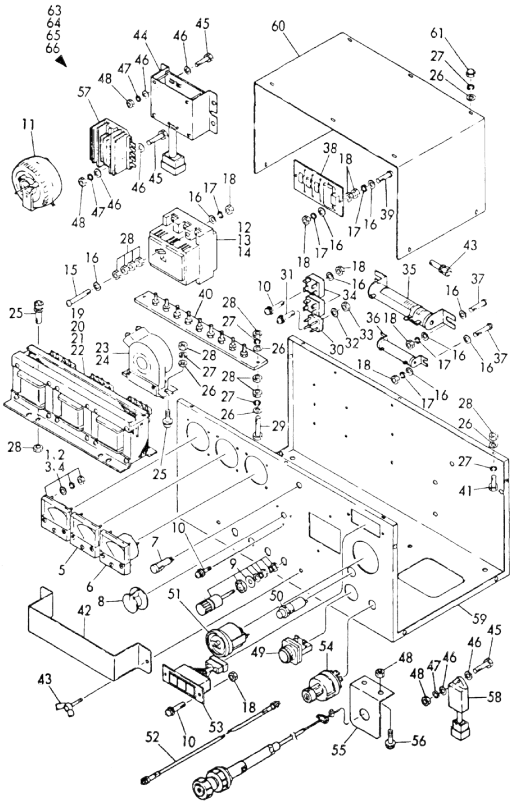

Remarks
(1) INCLUDE REF.NO.1-62 PARTS.
(2) INTERCHANGEABLE BY SIMULTANEOUS REPLACEMENT WITH NO.12-1 & NO. 59-1.

(A)=YEG12H (B)=YEG15H (C)=YEG25H (D)=YEG35H (E)= (F)=

No.	Lev.	Parts No.	Description	Q'ty (A)	(B)	(C)	(D)	(E)	(F)	I	R
			(D=G/# 20656)								
14B	1	982512-40260	SWITCH(50HZ/220V				1				
14B-1	1	982512-40261	SWITCH, 50HZ/200V				1			S	2
			(D=G/# 20656)								
14C	1	982512-40350	SWITCH, MAIN				1				
14C-1	1	982512-40351	SWITCH, MAIN				1			S	2
			(D=G/# 20656)								
14D	1	982512-40320	SWITCH, 50HZ/200V				1				
14D-1	1	982512-40321	SWITCH, 50HZ/200V				1			S	2
			(D=G/# 20656)								
14E	1	982512-40260	SWITCH(50HZ/220V				1				
14E-1	1	982512-40261	SWITCH, 50HZ/200V				1			S	2
			(D=G/# 20656)								
15	1	982330-00480	SCREW	2	2	2	2				
16	1	22117-040000	WASHER, 4	14	14	18	18				
17	1	22217-040000	WASHER, SPRING 4	12	12	16	16				
18	1	26716-040002	NUT, M4	10	10	12	12				
19A	1	982511-80110	TRANSFORMER, 50/200	1							
19B	1	982511-80120	CURRENT TRANSFORMER	1							
19C	1	982511-80130	TRANSFORMER, 50/380	1							
19D	1	982511-80140	TRANSFORMER, 50/400	1							
19E	1	982511-80150	TRANSFORMER, 50/415	1							
19F	1	982511-80160	CURRENT TRANSFORMER	1							
19G	1	982511-80170	CURRENT TRANSFORMER	1							
19H	1	982511-80180	TRANSFORMER, 60/440	1							
19I	1	982511-80190	CUR.TRANS.(60HZ/480V	1							
20A	1	982511-80200	TRANSFORMER, 50/200		1						
20B	1	982511-80210	CURRENT TRANSFORMER		1						
20C	1	982511-80220	TRANSFORMER, 50/380		1						
20D	1	982511-80230	TRANSFORMER, 50/400		1						
20E	1	982511-80240	TRANSFORMER, 50/415		1						
20F	1	982511-80250	CUR.TRANS.(60HZ/220V		1						
20G	1	982511-80260	TRANSFORMER, 60/380		1						
20H	1	982511-80270	TRANSFORMER, 60/440		1						
20I	1	982511-80280	TRANSFORMER, 60/480		1						
21A	1	982511-80290	TRANSFORMER, 50/200			1					
21B	1	982511-80300	TRANSFORMER, 50/220			1					
21C	1	982511-80310	CUR.TRANS.(50HZ/380V			1					
21D	1	982511-80320	TRANSFORMER, 50/400			1					
21E	1	982511-80330	TRANSFORMER, 50/415			1					
21F	1	982511-80340	CUR.TRANS.(60HZ/220V			1					
21G	1	982511-80350	CUR.TRANS.(60HZ/380V			1					
21H	1	982511-80360	TRANSFORMER, 60/440			1					
21I	1	982511-80370	TRANSFORMER, 60/480			1					
22A	1	982511-80380	TRANSFORMER, 50/200				1				
22B	1	982511-80390	TRANSFORMER, 50/220				1				
22C	1	982511-80400	TRANSFORMER, 50/380				1				
22D	1	982511-80410	TRANSFORMER, 50/400				1				
22E	1	982511-80420	CUR.TRANS.(50HZ/415V				1				
22F	1	982511-80430	TRANSFORMER, 60/220				1				
22G	1	982511-80440	TRANSFORMER, 60/380				1				

N:Old ←Yes/No→ New. Q:Old ←No/Yes→ New. R:Old ←Yes/Yes→ New. S:Old ←No/No→ New. W:Add. Z:Discontinued. F:Interchangeable by set. K:Q'ty Change

++ CONTINUE ++

Copyright (C) YANMAR GLOBAL CS CO., LTD. All RightsReserved.

Fig.78. INSTRUMENT PANEL

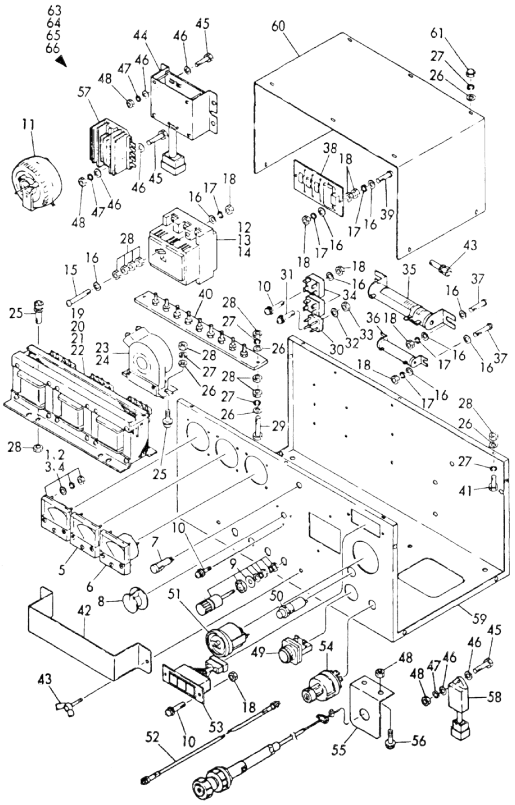

(A)=YEG12H (B)=YEG15H (C)=YEG25H (D)=YEG35H (E)= (F)=

No.	Lev.	Parts No.	Description	Q'ty (A)	(B)	(C)	(D)	(E)	(F)	I	R
22H	1	982511-80450	TRANSFORMER, 60/440				1				
22I	1	982511-80460	TRANSFORMER, 60/480				1				
23A	1	982513-90050	TRANSFORMER	1	1						
23B	1	982513-90050	TRANSFORMER		1						
23C	1	982513-90050	TRANSFORMER	1	1						
24A	1	982513-90060	TRANSFORMER			1					
24B	1	982513-90060	TRANSFORMER			1					
24C	1	982513-90050	TRANSFORMER			1					
24D	1	982513-90050	TRANSFORMER			1	1				
24E	1	982513-90050	TRANSFORMER			1	1				
24F	1	982513-90060	TRANSFORMER			1					
24G	1	982513-90050	TRANSFORMER			1					
24H	1	982513-90050	TRANSFORMER			1					
24I	1	982513-90050	TRANSFORMER			1	1				
24J	1	982513-90070	TRANSFORMER				1				
24K	1	982513-90070	TRANSFORMER				1				
24L	1	982513-90060	TRANSFORMER				1				
24M	1	982513-90070	TRANSFORMER				1				
24N	1	982513-90060	TRANSFORMER				1				
24O	1	982513-90060	TRANSFORMER				1				
25	1	982343-05014	BOLT, M5X14	6	6	6	6				
26	1	22117-050000	WASHER, 5	26	26	26	26				
27	1	22217-050000	WASHER, SPRING 5	22	22	22	22				
28	1	26716-050002	NUT, M5	24	24	24	24				
29	1	26116-050502	BOLT, M5X 50 PLATED	2	2	2	2				
30	1	982513-10060	RECTIFIER	1	1	1	1				
31	1	982343-03015	SCREW, M3X15	1	1	1	1				
32	1	982030-10300	WASHER 3	1	1	1	1				
33	1	982023-10300	NUT M3	1	1	1	1				
34	1	982513-10050	RECTIFIER	2	2	2	2				
35	1	982511-10040	RESISTOR 60W-10	1	1	1	1				
36	1	982511-10030	RESISTOR 30W-30			1	1				
37	1	26557-040122	SCREW, M4X12	2	2	4	4				
38	1	982513-70160	SURGE ABSORBER	1	1	1	1				
39	1	26557-040122	SCREW, M4X12	2	2	2	2				
40A	1	982511-50010	TAP, TERMINAL	1	1	1					
40B	1	982511-50010	TAP, TERMINAL				1				
40C	1	982511-50040	TAP, TERMINAL				1				
41	1	26116-050152	BOLT M 5X 15 PLATED	6	6	6	6				
42	1	982518-60240	GUARD	1	1	1	1				
43	1	982317-00070	BOLT	2	2	2	2				
44	1	982514-00040	RELAY	1	1	1	1				
45	1	26116-060252	BOLT, M6X 25 PLATED	5	5	5	5				
46	1	22117-060000	WASHER, 6	10	10	10	10				
47	1	22217-060000	WASHER, SPRING 6	5	5	5	5				
48	1	26756-060002	NUT, LOCK M6	7	7	7	7				
49	1	982517-70100	SWITCH	1	1	1	1				
50	1	124559-77971	LAMP, PILOT	1	1	1	1				
51	1	171080-91100	TACHOMETER	1	1	1	1				
52A	1	194145-56901	CABLE ASSY, METER	1	1	1					
52B	1	42130-502220	CABLE, TACHOMETER				1				

Remarks
(1) INCLUDE REF.NO.1-62 PARTS.
(2) INTERCHANGEABLE BY SIMULTANEOUS REPLACEMENT WITH NO.12-1 & NO. 59-1.

N:Old ◄Yes/No► New. Q:Old ◄No/Yes► New. R:Old ◄Yes/Yes► New. S:Old ◄No/No► New. W:Add. Z:Discontinued. F:Interchangeable by set. K:Q'ty Change

++ CONTINUE ++

Copyright (C) YANMAR GLOBAL CS CO., LTD. All RightsReserved.

Fig.78. INSTRUMENT PANEL

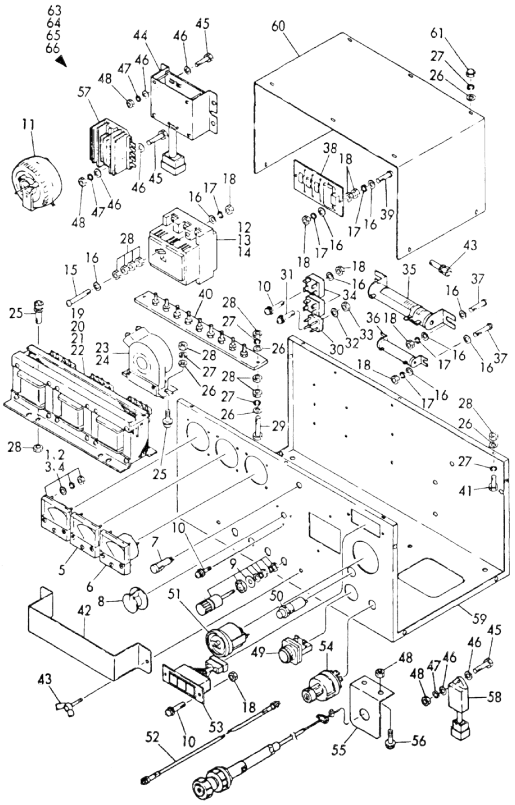

Remarks
(1) INCLUDE REF.NO.1-62 PARTS.
(2) INTERCHANGEABLE BY SIMULTANEOUS REPLACEMENT WITH NO.12-1 & NO. 59-1.

(A)=YEG12H (B)=YEG15H (C)=YEG25H (D)=YEG35H (E)= (F)=

No.	Lev.	Parts No.	Description	Q'ty (A)	(B)	(C)	(D)	(E)	(F)	I	R
53	1	170038-91310	LAMP	1	1	1	1				
54	1	121400-91251	SWITCH, STARTER	1	1	1	1				
55	1	982215-00600	BRACKET, THROTTLE	1	1	1	1				
56	1	26116-060162	BOLT, M6X 16 PLATED	2	2	2	2				
57	1	119660-77710	LIMITER, CURRENT 15A	1	1	1	1				
58	1	124559-77971	LAMP, PILOT	1	1	1	1				
59A	1	982515-70400	PANEL, 200-480V	1	1						
59A-1	1	982515-70401	PANEL, 200-480V	1	1					S	2
	(A=G/# 11071)	(B=G/# 21397)									
59B	1	982515-70410	PANEL, 380-480V			1					
59B-1	1	982515-70411	PANEL, 380-480V			1				S	2
			(C=G/# 21195)								
59C	1	982515-70420	PANEL, 200-220V			1					
59C-1	1	982515-70421	PANEL, 200-220V			1				S	2
			(C=G/# 21195)								
59D	1	982515-70430	PANEL, 380-480V				1				
59D-1	1	982515-70431	PANEL, 380-480V				1			S	2
			(D=G/# 20656)								
59E	1	982515-70440	PANEL, 200-220V				1				
59E-1	1	982515-70441	PANEL, 200-220V				1			S	2
			(D=G/# 20656)								
60	1	982515-80320	COVER, PANEL	1	1	1	1				
61	1	982036-05002	CAP NUT M 5	6	6	6	6				
62	1	982343-05014	BOLT, M5X14	4	4	4	4				
63A	1	982519-30190	PANEL ASSY,50HZ/200V	1							
63A-1	1	982519-30191	PANEL ASSY,50HZ/200V	1						N	1
	(A=G/# 11071)										
63B	1	982519-30200	PANEL ASSY,50HZ/220V	1							
63B-1	1	982519-30201	PANEL ASSY,50HZ/220V	1						N	1
	(A=G/# 11071)										
63C	1	982519-30210	PANEL ASSY,50HZ/380V	1							
63C-1	1	982519-30211	PANEL ASSY,50HZ/380V	1						N	1
	(A=G/# 11071)										
63D	1	982519-30220	PANEL ASSY,50HZ/400V	1							
63D-1	1	982519-30221	PANEL ASSY,50HZ/400V	1						N	1
	(A=G/# 11071)										
63E	1	982519-30230	PANEL ASSY(50HZ/415V	1							
63E-1	1	982519-30231	PANEL ASSY(50HZ/415V	1						N	1
	(A=G/# 11071)										
63F	1	982519-30240	PANEL ASSY,60HZ/220V	1							
63F-1	1	982519-30241	PANEL ASSY,60HZ/220V	1						N	1
	(A=G/# 11071)										
63G	1	982519-30250	PANEL ASSY(60HZ/380V	1							
63G-1	1	982519-30251	PANEL ASSY(60HZ/380V	1						N	1
	(A=G/# 11071)										
63H	1	982519-30260	PANEL ASSY,60HZ/440V	1							1
63H-1	1	982519-30261	PANEL ASSY,60HZ/440V	1						N	1
	(A=G/# 11071)										
63I	1	982519-30270	PANEL ASSY(60HZ/480V	1							1
63I-1	1	982519-30271	PANEL ASSY(60HZ/480V	1						N	1
	(A=G/# 11071)										

N:Old ←Yes/No→ New. Q:Old ←No/Yes→ New. R:Old ←Yes/Yes→ New. S:Old ←No/No→ New. W:Add. Z:Discontinued. F:Interchangeable by set. K:Q'ty Change

++ CONTINUE ++

Copyright (C) YANMAR GLOBAL CS CO., LTD. All RightsReserved.

Fig.78. INSTRUMENT PANEL

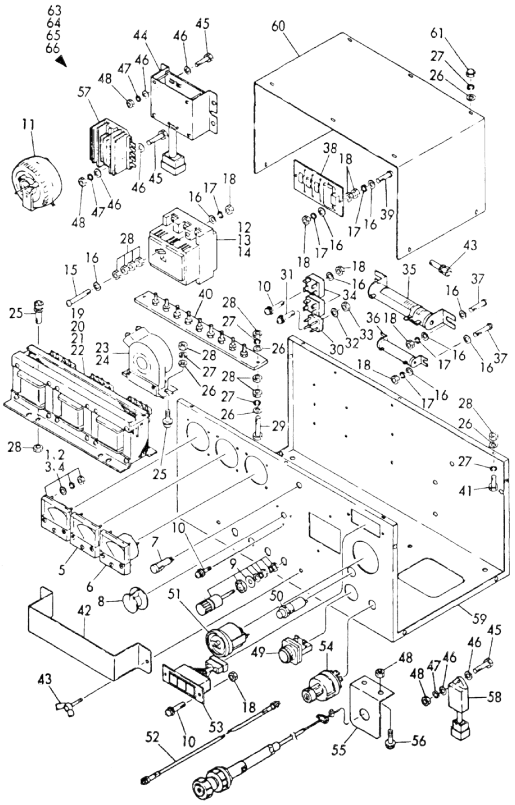

(A)=YEG12H
(B)=YEG15H
(C)=YEG25H
(D)=YEG35H
(E)=
(F)=

No.	Lev.	Parts No.	Description	Q'ty (A)	(B)	(C)	(D)	(E)	(F)	I	R
64A	1	982519-30280	PANEL ASSY,50HZ/200V		1						
64A-1	1	982519-30281	PANEL ASSY,50HZ/200V		1					N	1
		(B=G/# 21397)									
64B	1	982519-30290	PANEL ASSY,50HZ/220V		1						
64B-1	1	982519-30291	PANEL ASSY,50HZ/220V		1					N	1
		(B=G/# 21397)									
64C	1	982519-30300	PANEL ASSY,50HZ/380V		1						
64C-1	1	982519-30301	PANEL ASSY,50HZ/380V		1					N	1
		(B=G/# 21397)									
64D	1	982519-30310	PANEL ASSY,50HZ/400V		1						
64D-1	1	982519-30311	PANEL ASSY,50HZ/400V		1					N	1
		(B=G/# 21397)									
64E	1	982519-30320	PANEL ASSY,50HZ/415V		1						
64E-1	1	982519-30321	PANEL ASSY,50HZ/415V		1					N	1
		(B=G/# 21397)									
64F	1	982519-30330	PANEL ASSY,60HZ/220V		1						
64F-1	1	982519-30331	PANEL ASSY,60HZ/220V		1					N	1
		(B=G/# 21397)									
64G	1	982519-30340	PANEL ASSY,60HZ/380V		1						
64G-1	1	982519-30341	PANEL ASSY,60HZ/380V		1					N	1
		(B=G/# 21397)									
64H	1	982519-30350	PANEL ASSY,60HZ/440V		1						
64H-1	1	982519-30351	PANEL ASSY,60HZ/440V		1					N	1
		(B=G/# 21397)									
64I	1	982519-30360	PANEL ASSY,60HZ/480V		1						
64I-1	1	982519-30361	PANEL ASSY,60HZ/480V		1					N	1
		(B=G/# 21397)									
65A	1	982519-30370	PANEL ASSY,50HZ/200V			1					
65A-1	1	982519-30371	PANEL ASSY,50HZ/200V			1				N	1
			(C=G/# 21195)								
65B	1	982519-30380	PANEL ASSY,50HZ/220V			1					
65B-1	1	982519-30381	PANEL ASSY,50HZ/220V			1				N	1
			(C=G/# 21195)								
65C	1	982519-30390	PANEL ASSY,50HZ/380V			1					
65C-1	1	982519-30391	PANEL ASSY,50HZ/380V			1				N	1
			(C=G/# 21195)								
65D	1	982519-30400	PANEL ASSY,50HZ/400V			1					
65D-1	1	982519-30400	PANEL ASSY,50HZ/400V			1				N	1
			(C=G/# 21195)								
65E	1	982519-30410	PANEL ASSY,50HZ/415V			1					
65E-1	1	982519-30411	PANEL ASSY,50HZ/415V			1				N	1
			(C=G/# 21195)								
65F	1	982519-30420	PANEL ASSY,60HZ/220V			1					
65F-1	1	982519-30421	PANEL ASSY,60HZ/220V			1				N	1
			(C=G/# 21195)								
65G	1	982519-30430	PANEL ASSY,60HZ/380V			1					
65G-1	1	982519-30431	PANEL ASSY,60HZ/380V			1				N	1
			(C=G/# 21195)								
65H	1	982519-30440	PANEL ASSY,60HZ/440V			1					
65H-1	1	982519-30441	PANEL ASSY,60HZ/440V			1				N	1
			(C=G/# 21195)								

Remarks
(1) INCLUDE REF.NO.1-62 PARTS.
(2) INTERCHANGEABLE BY SIMULTANEOUS REPLACEMENT WITH NO.12-1 & NO. 59-1.

N:Old ◄Yes/No► New. Q:Old ◄No/Yes► New. R:Old ◄Yes/Yes► New. S:Old ◄No/No► New. W:Add. Z:Discontinued. F:Interchangeable by set. K:Q'ty Change

++ CONTINUE ++

Copyright (C) YANMAR GLOBAL CS CO., LTD. All RightsReserved.

Fig.78. INSTRUMENT PANEL

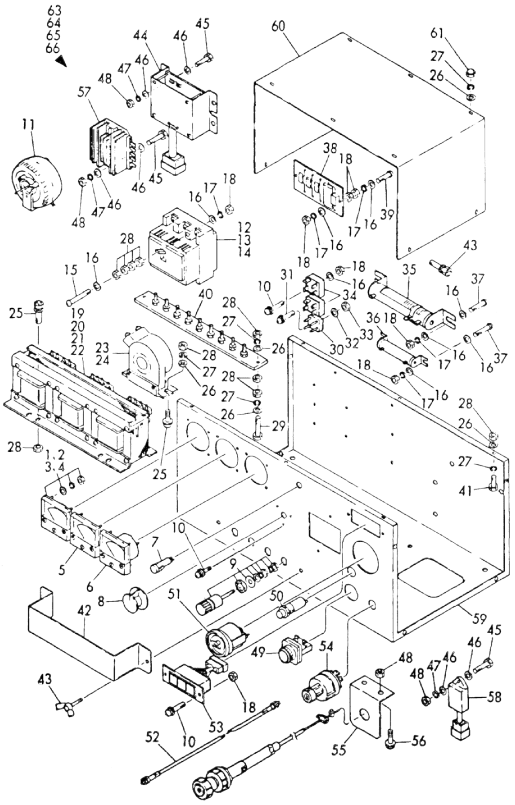

(A)=YEG12H (D)=YEG35H
(B)=YEG15H (E)=
(C)=YEG25H (F)=

No.	Lev.	Parts No.	Description	Q'ty (A)	(B)	(C)	(D)	(E)	(F)	I	R
65I	1	982519-30450	PANEL ASSY,60HZ/480V			1					
65I-1	1	982519-30451	PANEL ASSY,60HZ/480V			1				N	1
			(C=G/# 21195)								
66A	1	982519-30460	PANEL ASSY,50HZ/200V				1				
66A-1	1	982519-30461	PANEL ASSY,50HZ/200V				1			N	1
			(D=G/# 20656)								
66B	1	982519-30470	PANEL ASSY(50HZ/220V				1				
66B-1	1	982519-30471	PANEL ASSY,50HZ/220V				1			N	1
			(D=G/# 20656)								
66C	1	982519-30480	PANEL ASSY(50HZ/380V				1				
66C-1	1	982519-30481	PANEL ASSY,50HZ/380V				1			N	1
			(D=G/# 20656)								
66D	1	982519-30490	PANEL ASSY,50HZ/400V				1				
66D-1	1	982519-30491	PANEL ASSY,50HZ/400V				1			N	1
			(D=G/# 20656)								
66E	1	982519-30500	PANEL ASSY,50HZ/415V				1				
66E-1	1	982519-30501	PANEL ASSY,50HZ/415V				1			N	1
			(D=G/# 20656)								
66F	1	982519-30510	PANEL ASSY,60HZ/220V				1				
66F-1	1	982519-30511	PANEL ASSY,60HZ/220V				1			N	1
			(D=G/# 20656)								
66G	1	982519-30520	PANEL ASSY,60HZ/380V				1				
66G-1	1	982519-30521	PANEL ASSY,60HZ/380V				1			N	1
			(D=G/# 20656)								
66H	1	982519-30530	PANEL ASSY,60HZ/440V				1				
66H-1	1	982519-30531	PANEL ASSY,60HZ/440V				1			N	1
			(D=G/# 20656)								
66I	1	982519-30540	PANEL ASSY,60HZ/480V				1				
66I-1	1	982519-30541	PANEL ASSY,60HZ/480V				1			N	1
			(D=G/# 20656)								

Remarks
(1) INCLUDE REF.NO.1-62 PARTS.
(2) INTERCHANGEABLE BY SIMULTANEOUS REPLACEMENT WITH NO.12-1 & NO. 59-1.

N:Old ←Yes/No→ New. Q:Old ←No/Yes→ New. R:Old ←Yes/Yes→ New. S:Old ←No/No→ New. W:Add. Z:Discontinued. F:Interchangeable by set. K:Q'ty Change

Copyright (C) YANMAR GLOBAL CS CO., LTD. All RightsReserved.

Fig.79. COMMONBED FRAME

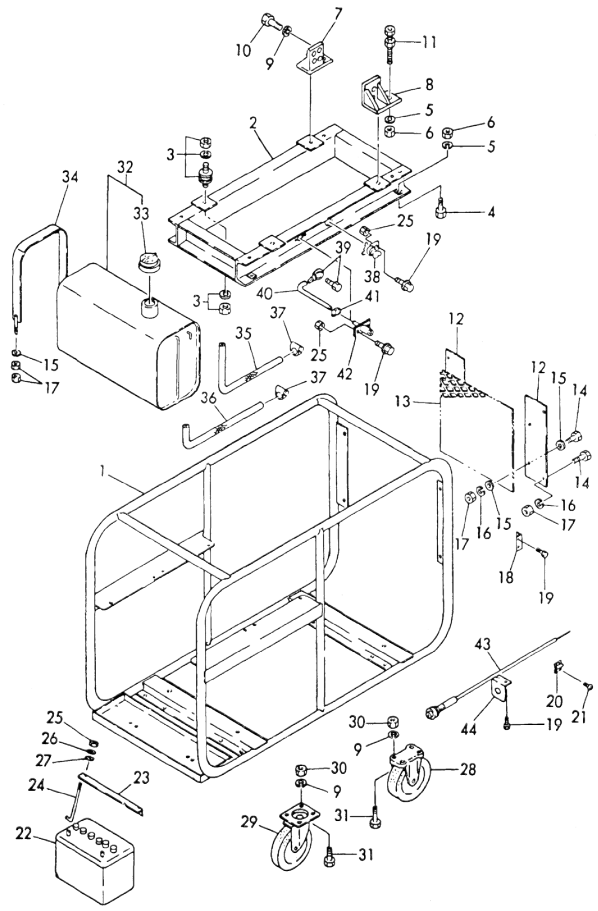

(A)=YEG12H (D)=YEG35H
(B)=YEG15H (E)=
(C)=YEG25H (F)=

No.	Lev.	Parts No.	Description	Q'ty (A)	(B)	(C)	(D)	(E)	(F)	I	R
1A	1	982210-40490	FRAME	1							
1B	1	982210-40500	FRAME		1						
1C	1	982210-40510	FRAME			1					
1D	1	982210-40520	FRAME				1				
2A	1	982210-20550	BED	1							
2B	1	982210-20560	BED		1						
2C	1	982210-20570	BED			1					
2D	1	982210-20580	BED				1				
3A	1	982219-00460	RUBBER, CUSHION	4	4						
3B	1	982219-00110	RUBBER, CUSHION			4	4				
4	1	26116-120352	BOLT, M12X 35 PLATED	4	4	4	4				
5	1	22217-120000	WASHER, SPRING 12	6	6	6	6				
6	1	26716-120002	NUT, M12	6	6	6	6				
7A	1	982247-00010	ENGINE MOUNT(LEFT	1	1						
7B	1	982247-00020	FOOT			1					
7C	1	982247-00030	FOOT				1				
8A	1	982247-00040	ENGINE MOUNT(RIGHT	1	1						
8B	1	982247-00050	FOOT			1					
8C	1	982247-00060	FOOT				1				
9	1	22217-100000	WASHER, SPRING 10	24	24	24	24				
10	1	26116-100252	BOLT, M10X 25 PLATED	8	8	8	8				
11	1	26116-120502	BOLT, M12X 50 PLATED	2	2	2	2				
12A	1	982298-00010	PLATE, RADIATOR	2							
12B	1	982298-00020	PLATE, RADIATOR		2						
12C	1	982298-00030	PLATE, RADIATOR			2					
12D	1	982298-00040	PLATE, RADIATOR				2				
13A	1	982298-10010	GUARD	1							
13B	1	982298-10020	GUARD		1						
13C	1	982298-10030	GUARD			1					
13D	1	982298-10040	GUARD				1				
14	1	26116-080252	BOLT, M8X 25 PLATED	12	12	12	12				
15	1	22117-080000	WASHER, 8	16	16	16	16				
16	1	22217-080000	WASHER, SPRING 8	12	12	12	12				
17	1	26716-080002	NUT, M8	20	20	20	20				
18	1	982298-20010	PLATE	1	1	1	1				
19	1	982343-06016	BOLT, M6X16	7	7	7	7				
20	1	982215-00330	CLAMP	1	1	1	1				
21	1	26557-040152	SCREW	4	4	4	4				
22A	1	982217-00030	BATTERY	1	1						
22B	1	982217-00040	BATTERY			1	1				
23A	1	982212-30050	HOLDER	1	1						
23B	1	982212-30070	CLAMP			1	1				
24	1	982212-30080	BOLT	2	2	2	2				
25	1	26716-060002	NUT, M6	7	7	7	7				
26	1	22217-060000	WASHER, SPRING 6	4	4	4	4				
27	1	22117-060000	WASHER, 6	2	2	2	2				
28A	1	982219-10010	WHEEL	2	2						
28B	1	982219-10050	WHEEL			2	2				
29A	1	982219-10060	WHEEL 200DX155W	2	2						
29B	1	982219-10070	CASTER			2	2				
30	1	26716-100002	NUT, M10	16	16	16	16				

N:Old ←Yes/No→ New. Q:Old ←No/Yes→ New. R:Old ←Yes/Yes→ New. S:Old ←No/No→ New. W:Add. Z:Discontinued. F:Interchangeable by set. K:Q'ty Change

++ CONTINUE ++

Copyright (C) YANMAR GLOBAL CS CO., LTD. All RightsReserved.

Fig.79. COMMONBED FRAME

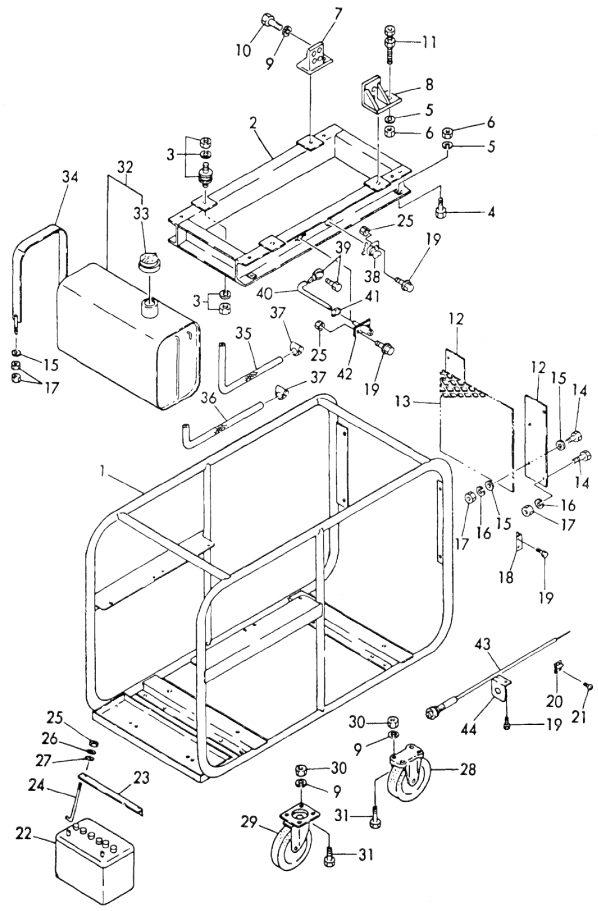

(A)=YEG12H (D)=YEG35H
(B)=YEG15H (E)=
(C)=YEG25H (F)=

No.	Lev.	Parts No.	Description	Q'ty (A)	(B)	(C)	(D)	(E)	(F)	I	R
31	1	26116-100202	BOLT, M10X 20 PLATED	16	16	16	16				
32	1	982217-90200	FUEL TANK	1	1	1	1				
33	2	982217-90210	CAP	1	1	1	1				
34	1	982218-00090	BAND, TANK	2	2	2	2				
35	1	982283-06010	HOSE, FUEL	1	1	1	1				
36	1	982283-06020	HOSE, FUEL	1	1	1	1				
37	1	982284-00012	CLIP	4	4	4	4				
38	1	129150-49100	COCK ASSY, 3-WAY	1	1	1	1				
39	1	982217-30220	JOINT	1	1	1	1				
40	1	982283-16010	HOSE, OIL	1	1	1	1				
41	1	982284-00025	CLIP	2	2	2	2				
42	1	982217-30260	DRAIN, OIL	1	1	1	1				
43A	1	982215-00610	THROTTLE	1							
43A-1	1	170022-67100	CABLE, PUSH-PULL	1						N	
	(A=FROM 1ST)										
43B	1	982215-00620	THROTTLE		1						
43B-1	1	170022-67100	CABLE, PUSH-PULL		1					N	
			(B=FROM 1ST)								
43C	1	982215-00630	THROTTLE			1					
43C-1	1	170022-67100	CABLE, PUSH-PULL			1				N	
			(C=FROM 1ST)								
43D	1	982215-00640	THROTTLE				1				
43D-1	1	170029-67100	CABLE, PUSH-PULL				1			N	
			(D=FROM 1ST)								
44	1	982215-00600	BRACKET, THROTTLE	1	1	1	1				

N:Old ←Yes/No→ New. Q:Old ←No/Yes→ New. R:Old ←Yes/Yes→ New. S:Old ←No/No→ New. W:Add. Z:Discontinued. F:Interchangeable by set. K:Q'ty Change

Copyright (C) YANMAR GLOBAL CS CO., LTD. All RightsReserved.

Fig.80. BONNET

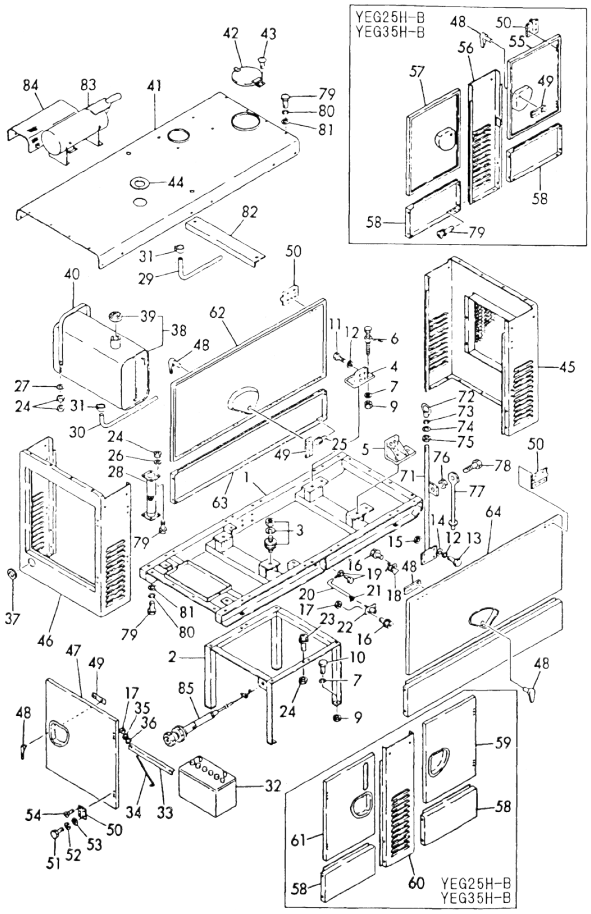

(A)=YEG12H (B)=YEG15H (C)=YEG25H (D)=YEG35H (E)= (F)=

No.	Lev.	Parts No.	Description	Q'ty (A)	(B)	(C)	(D)	(E)	(F)	I	R
1A	1	982701-10010	COMMON BED	1							
1B	1	982701-10020	COMMON BED		1						
1C	1	982701-10030	COMMON BED			1					
1D	1	982701-10040	COMMON BED				1				
2A	1	982701-10080	MOUNT	1	1						
2B	1	982701-10090	COMMON BED			1	1				
3A	1	982219-00460	RUBBER, CUSHION	4	4						
3B	1	982219-00110	RUBBER, CUSHION			4	4				
4A	1	982247-00010	ENGINE MOUNT(LEFT	1	1						
4B	1	982247-00020	FOOT			1					
4C	1	982247-00030	FOOT				1				
5A	1	982247-00040	ENGINE MOUNT(RIGHT	1	1						
5B	1	982247-00050	FOOT			1					
5C	1	982247-00060	FOOT				1				
6	1	26116-120502	BOLT, M12X 50 PLATED	2	2	2	2				
7	1	22217-120000	WASHER, SPRING 12	6	6	14	14				
8	1	22117-120000	WASHER, 12			8	8				
9	1	26716-120002	NUT, M12	6	6	14	14				
10	1	26116-120302	BOLT, M12X 30 PLATED	4	4	12	12				
11	1	26116-100252	BOLT, M10X 25 PLATED	8	8	8	8				
12	1	22217-100000	WASHER, SPRING 10	16	16	8	8				
13	1	26116-100302	BOLT, M10X 30 PLATED	8	8						
14	1	22117-100000	WASHER, 10	8	8						
15	1	26716-100002	NUT, M10	8	8						
16	1	982343-06016	BOLT, M6X16	3	3	3	3				
17	1	26716-060002	NUT, M6	5	5	5	5				
18	1	129150-49100	COCK ASSY, 3-WAY	1	1	1	1				
19	1	982217-30220	JOINT	1	1	1	1				
20	1	982283-16010	HOSE, OIL	1	1	1	1				
21	1	982284-00025	CLIP	2	2	2	2				
22	1	982217-30260	DRAIN, OIL	1	1	1	1				
23	1	982343-08025	BOLT, M8X25	8	8	8	8				
24	1	26716-080002	NUT, M8	16	16	16	16				
25	1	982343-08020	BOLT, M8X20	8	8	16	16				
26	1	22217-080000	WASHER, SPRING 8	8	8	8	8				
27	1	22117-080000	WASHER, 8	8	8	8	8				
28A	1	982278-00015	PIPE, EXHAUST	1	1						
28B	1	982278-00016	PIPE, EXHAUST			1	1				
29	1	982283-06020	HOSE, FUEL	1	1	1	1				
30	1	982283-06010	HOSE, FUEL	1	1	1	1				
31	1	982284-00012	CLIP	4	4	4	4				
32A	1	982217-00030	BATTERY	1	1						
32B	1	982217-00040	BATTERY			1	1				
33A	1	982212-30050	HOLDER	1	1						
33B	1	982212-30070	CLAMP			1	1				
34	1	982212-30080	BOLT	2	2	2	2				
35	1	22217-060000	WASHER, SPRING 6	2	2	2	2				
36	1	22117-060000	WASHER, 6	2	2	2	2				
37	1	982514-70480	GROMMET	1	1	1	1				
38	1	982217-90201	FUEL TANK	1	1	1	1				
39	1	982217-90210	CAP	1	1	1	1				

N:Old ←Yes/No→ New. Q:Old ←No/Yes→ New. R:Old ←Yes/Yes→ New. S:Old ←No/No→ New. W:Add. Z:Discontinued. F:Interchangeable by set. K:Q'ty Change

++ CONTINUE ++

Copyright (C) YANMAR GLOBAL CS CO., LTD. All RightsReserved.

Fig.80. BONNET

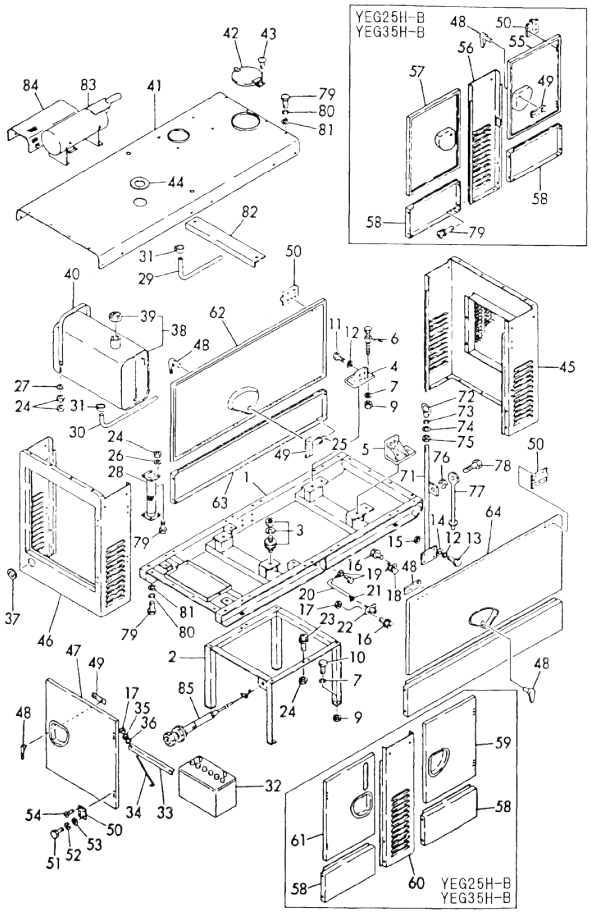

(A)=YEG12H (B)=YEG15H (C)=YEG25H (D)=YEG35H (E)= (F)=

No.	Lev.	Parts No.	Description	Q'ty (A)	(B)	(C)	(D)	(E)	(F)	I	R
40	1	982218-00090	BAND, TANK	2	2	2	2				
41A	1	982701-10110	COVER	1							
41B	1	982701-10120	COVER		1						
41C	1	982701-10130	COVER			1					
41D	1	982701-10140	COVER				1				
42	1	982701-10160	CAP	1	1	1	1				
43	1	982330-06015	SCREW, M6	2	2	2	2				
44	1	982701-10160	CAP	1	1	1	1				
45A	1	982701-10170	COVER, RADIATOR	1							
45B	1	982701-10180	COVER, RADIATOR		1						
45C	1	982701-10190	COVER, RADIATOR			1					
45D	1	982701-10200	COVER, RADIATOR				1				
46A	1	982701-10220	COVER, PANEL	1							
46B	1	982701-10230	COVER, PANEL		1						
46C	1	982701-10240	COVER, PANEL			1					
46D	1	982701-10250	COVER, PANEL			1					
47A	1	982701-10270	DOOR, PANEL	1							
47B	1	982701-10280	DOOR, PANEL		1						
47C	1	982701-10290	DOOR, PANEL			1					
47D	1	982701-10300	DOOR, PANEL				1				
48	1	982287-00010	HANDLE	3	3	5	5				
49	1	982287-00090	LEVER	3	3	5	5				
50	1	982286-00060	HINGE	6	6	10	10				
51	1	26116-050152	BOLT M 5X 15 PLATED	12	12	20	20				
52	1	22117-050000	WASHER, 5	12	12	20	20				
53	1	22217-050000	WASHER, SPRING 5	12	12	20	20				
54	1	982332-05010	SCREW	18	18	30	30				
55A	1	982701-10320	DOOR			1					
55B	1	982701-10330	DOOR				1				
56	1	982701-10350	COVER			1	1				
57A	1	982701-10360	DOOR			1					
57B	1	982701-10370	DOOR				1				
58A	1	982701-10390	COVER			4					
58B	1	982701-10400	COVER				4				
59A	1	982701-10420	DOOR			1					
59B	1	982701-10430	DOOR				1				
60A	1	982701-10450	COVER			1					
60B	1	982701-10460	COVER				1				
61A	1	982701-10480	DOOR			1					
61B	1	982701-10490	DOOR				1				
62A	1	982701-10510	DOOR	1							
62B	1	982701-10520	DOOR		1						
63A	1	982701-10530	COVER	1							
63B	1	982701-10540	COVER		1						
64A	1	982701-10550	DOOR	1							
64B	1	982701-10560	DOOR		1						
65A	1	982701-10570	COVER	1							
65B	1	982701-10580	COVER		1						
66	1	982701-10590	BOLT			2	2				
67	1	982365-00010	NUT, EYE M20			2	2				
68	1	22217-200000	WASHER, SPRING 20			2	2				

N:Old ←Yes/No→ New. Q:Old ←No/Yes→ New. R:Old ←Yes/Yes→ New. S:Old ←No/No→ New. W:Add. Z:Discontinued. F:Interchangeable by set. K:Q'ty Change

++ CONTINUE ++

Copyright (C) YANMAR GLOBAL CS CO., LTD. All RightsReserved.

Fig.80. BONNET

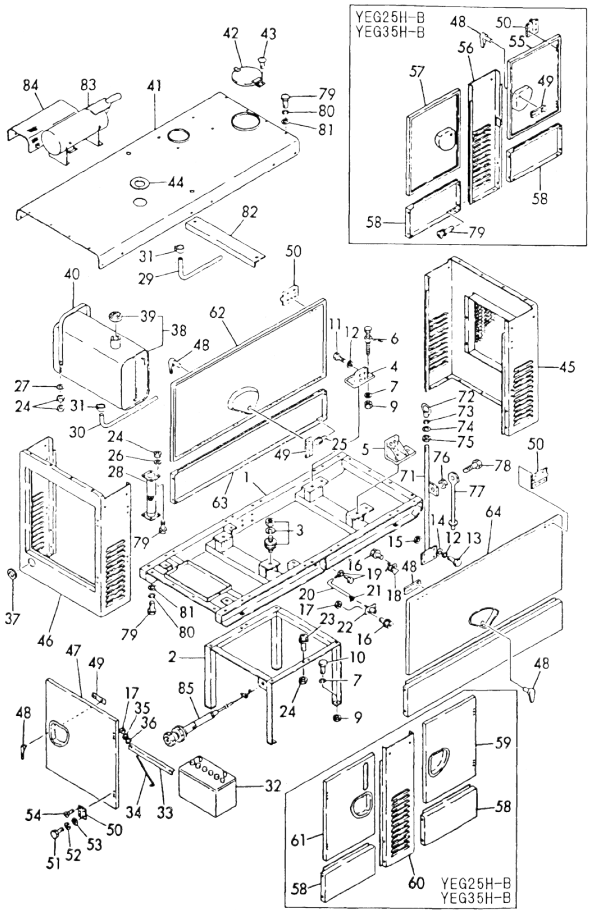

(A)=YEG12H
(B)=YEG15H
(C)=YEG25H
(D)=YEG35H
(E)=
(F)=

No.	Lev.	Parts No.	Description	Q'ty (A)	(B)	(C)	(D)	(E)	(F)	I	R
69	1	22117-200000	WASHER, 20			2	2				
70	1	26716-200002	NUT, M20			2	2				
71	1	982701-10600	BOLT, M16	2	2						
72	1	982365-00020	NUT, EYE M16	2	2						
73	1	22217-160000	WASHER, SPRING 16	2	2						
74	1	22117-160000	WASHER, 16	2	2						
75	1	26716-160002	NUT, M16	2	2						
76	1	982590-00010	BUSH	2	2						
77	1	982701-10610	ARM	2	2						
78	1	26116-060402	BOLT, M6X 40 PLATED	2	2						
79	1	26113-080202	BOLT M8X 20 (STEN	44	44	52	52				
80	1	22214-080000	SPRING WASHER 8	40	40	48	48				
81	1	22114-080000	WASHER 8	40	40	48	48				
82A	1	982701-10620	ANGLE, LIFTING	1							
82B	1	982701-10630	ANGLE, LIFTING		1						
82C	1	982701-10640	ANGLE, LIFTING			1					
82D	1	982701-10650	ANGLE, LIFTING				1				
83A	1	982275-00200	SILENCER	1							
83B	1	982275-00210	SILENCER		1						
83C	1	982275-00220	SILENCER			1					
83D	1	982275-00230	SILENCER				1				
84A	1	119888-13600	COVER, SILENCER	1	1						
84B	1	129111-13600	COVER, SILENCER			1					
84C	1	129411-13600	COVER, SILENCER				1				
85A	1	982215-00610	THROTTLE	1							
85B	1	982215-00620	THROTTLE		1						
85C	1	982215-00630	THROTTLE			1					
85D	1	982215-00640	THROTTLE				1				

N:Old ←Yes/No→ New. Q:Old ←No/Yes→ New. R:Old ←Yes/Yes→ New. S:Old ←No/No→ New. W:Add. Z:Discontinued. F:Interchangeable by set. K:Q'ty Change

Copyright (C) YANMAR GLOBAL CS CO., LTD. All RightsReserved.

Fig.81. GENERATOR

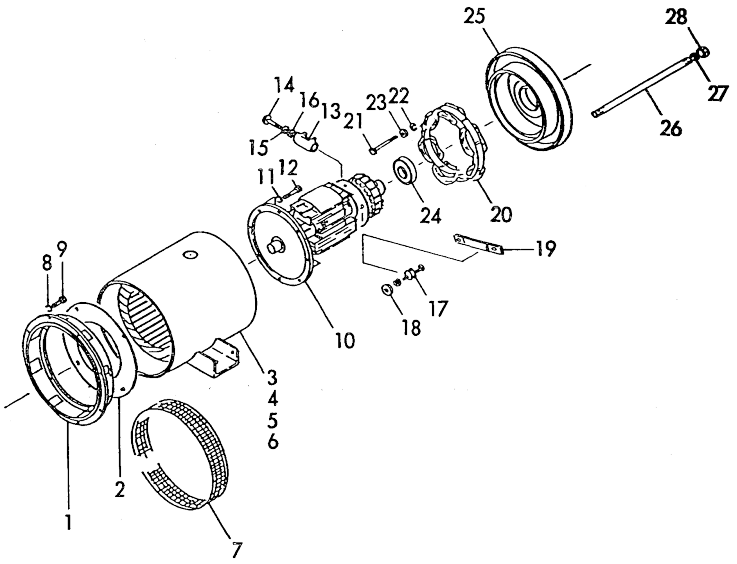

(A)=YEG-8HS
(B)=YEG-10HS
(C)=YEG-20HS
(D)=YEG-24HS
(E)=
(F)=

No.	Lev.	Parts No.	Description	Q'ty (A)	(B)	(C)	(D)	(E)	(F)	I	R
1A	1	982112-00150	HOUSING	1	1						
1B	1	982112-00120	HOUSING			1	1				
2A	1	982112-20180	GUIDE,AIR	1	1						
2B	1	982112-20150	GUIDE, AIR			1	1				
3A	1	982174-81500	STATOR(50HZ/100V)	1							
3B	1	982174-81510	STATOR(50HZ/110V)	1							
3C	1	982174-81520	STATOR(50HZ/200V)	1							
3D	1	982174-81530	STATOR(50HZ/220V)	1							
3E	1	982174-81540	STATOR(50HZ/230V)	1							
3F	1	982174-81550	STATOR(50HZ/240V)	1							
3G	1	982174-81560	STATOR(50HZ/110/220V	1							
3H	1	982174-81570	STATOR(50HZ/115/230V	1							
3I	1	982174-81580	STATOR(60HZ/110V)	1							
3J	1	982174-81590	STATOR(60HZ/115V)	1							
3K	1	982174-81600	STATOR(60HZ/120V)	1							
3L	1	982174-81610	STATOR(60HZ/220V)	1							
3M	1	982174-81620	STATOR(60HZ/230V)	1							
3N	1	982174-81630	STATOR(60HZ/240V)	1							
3O	1	982174-81640	STATOR(60HZ/110/220V	1							
3P	1	982174-81650	STATOR(60HZ/115/230V	1							
3Q	1	982174-81660	STATOR(60HZ/120/240V	1							
4A	1	982174-81670	STATOR(50HZ/100V)		1						
4B	1	982174-81680	STATOR(50HZ/110V)		1						
4C	1	982174-81690	STATOR(50HZ/200V)		1						
4D	1	982174-81700	STATOR(50HZ/220V)		1						
4E	1	982174-81710	STATOR(50HZ/230V)		1						
4F	1	982174-81720	STATOR(50HZ/240V)		1						
4G	1	982174-81730	STATOR(50HZ/110/220V		1						
4H	1	982174-81740	STATOR(50HZ/115/230V		1						
4I	1	982174-81750	STATOR(60HZ/110V)		1						
4J	1	982174-81760	STATOR(60HZ/115V)		1						
4K	1	982174-81770	STATOR(60HZ/120V)		1						
4L	1	982174-81780	STATOR(60HZ/220V)		1						
4M	1	982174-81790	STATOR(60HZ/230V)		1						
4N	1	982174-81800	STATOR(60HZ/240V)		1						
4O	1	982174-81810	STATOR(60HZ/110/220V		1						
4P	1	982174-81820	STATOR(60HZ/115/230V		1						
4Q	1	982174-81830	STATOR(60HZ/120/240V		1						
5A	1	982174-81840	STATOR(50HZ/100V)			1					
5B	1	982174-81850	STATOR(50HZ/110V)			1					
5C	1	982174-81860	STATOR(50HZ/200V)			1					
5D	1	982174-81870	STATOR(50HZ/220V)			1					
5E	1	982174-81880	STATOR(50HZ/230V)			1					
5F	1	982174-81890	STATOR(50HZ/240V)			1					
5G	1	982174-81900	STATOR(50HZ/110/220V			1					
5H	1	982174-81910	STATOR(50HZ/115/230V			1					
5I	1	982174-81920	STATOR(60HZ/110V)			1					
5J	1	982174-81930	STATOR(60HZ/115V)			1					
5K	1	982174-81940	STATOR(60HZ/120V)			1					
5L	1	982174-81950	STATOR(60HZ/220V)			1					
5M	1	982174-81960	STATOR(60HZ/230V)			1					

Remarks
(M) MISPRINT.

N:Old $\frac{\text{Yes}}{\text{No}}$ New. Q:Old $\frac{\text{No}}{\text{Yes}}$ New. R:Old $\frac{\text{Yes}}{\text{Yes}}$ New. S:Old $\frac{\text{No}}{\text{No}}$ New. W:Add. Z:Discontinued. F:Interchangeable by set. K:Q'ty Change

++ CONTINUE ++

Copyright (C) YANMAR GLOBAL CS CO., LTD. All RightsReserved.

Fig.81. GENERATOR

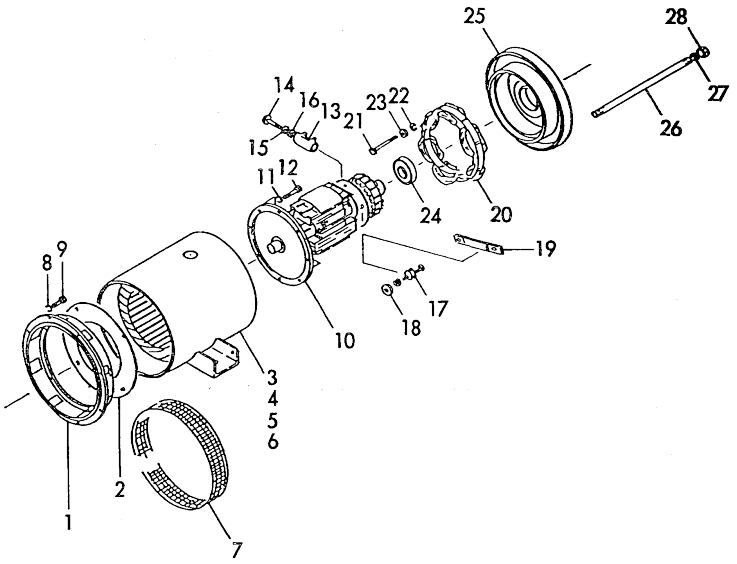

Remarks
(M) MISPRINT.

(A)=YEG-8HS (D)=YEG-24HS
(B)=YEG-10HS (E)=
(C)=YEG-20HS (F)=

No.	Lev.	Parts No.	Description	Q'ty (A)	(B)	(C)	(D)	(E)	(F)	I	R
5N	1	982174-81970	STATOR(60HZ/240V)			1					
5O	1	982174-81980	STATOR(60HZ/110/220V			1					
5P	1	982174-81990	STATOR(60HZ/115/230V			1					
5Q	1	982174-82000	STATOR(60HZ/120/240V			1					
6A	1	982174-82010	STATOR(50HZ/100V)				1				
6B	1	982174-82020	STATOR(50HZ/110V)				1				
6C	1	982174-82030	STATOR(50HZ/200V)				1				
6D	1	982174-82040	STATOR(50HZ/220V)				1				
6E	1	982174-82050	STATOR(50HZ/230V)				1				
6F	1	982174-82060	STATOR(50HZ/240V)				1				
6G	1	982174-82070	STATOR(50HZ/110/220V				1				
6H	1	982174-82080	STATOR(50HZ/115/230V				1				
6I	1	982174-82090	STATOR(60HZ/110V)				1				
6J	1	982174-82100	STATOR(60HZ/115V)				1				
6K	1	982174-82110	STATOR(60HZ/120V)				1				
6L	1	982174-82120	STATOR(60HZ/220V)				1				
6M	1	982174-82130	STATOR(60HZ/230V)				1				
6N	1	982174-82140	STATOR(60HZ/240V)				1				
6O	1	982174-82150	STATOR(60HZ/110/220V				1				
6P	1	982174-82160	STATOR(60HZ/115/230V				1				
6Q	1	982174-82170	STATOR(60HZ/120/240V				1				
7A	1	982190-00010	GUARD	1	1						
7B	1	982190-00020	GUARD			1	1				
8	1	22217-100000	WASHER, SPRING 10	8	8	8	8				
9	1	26006-102502	BOLT 10X25	8	8	8	8				M
9-1	1	26116-100252	BOLT, M10X 25 PLATED	8	8	8	8				
10A	1	982116-90250	ROTOR SET	1							
10B	1	982116-90260	ROTER SET		1						
10C	1	982116-90270	ROTER SET			1					
10D	1	982116-90280	ROTER SET				1				
11	1	22217-080000	WASHER, SPRING 8	8	8	8	8				
12	1	982314-50835	BOLT, M8X35	8	8	8	8				
13	1	982117-10011	RESISTOR	1	1	1	1				
14	1	26557-040402	SCREW, M4X40	1	1	1	1				
15	1	22217-040000	WASHER, SPRING 4	1	1	1	1				
16	1	22117-040000	WASHER, 4	1	1	1	1				
17A	1	982512-10040	SILICON	4	4	4					
17B	1	982512-10050	SILICON	3	3	3					
17C	1	982512-10120	RECTIFIER				4				
17D	1	982512-10130	RECTIFIER				3				
18	1	982117-40010	WASHER	16	16	16	16				
19A	1	982111-90010	CONNECTOR	6	6						
19B	1	982111-90020	CONNECTOR			6	6				
20A	1	982110-90020	COIL, EXCITER FIELD	1	1						
20B	1	982110-90140	COIL, EXITER			1					
20C	1	982110-90100	COIL, FIELD				1				
21A	1	26116-060402	BOLT, M6X 40 PLATED	6	6	6					
21B	1	26116-060502	BOLT, M6X 50 PLATED				6				
22	1	22217-060000	WASHER, SPRING 6	6	6	6	6				
23	1	22117-060000	WASHER, 6	6	6	6	6				
24	1	24107-063074	BEARING, BALL 6307ZZ	1	1	1	1				

N:Old ←Yes/No→ New. Q:Old ←No/Yes→ New. R:Old ←Yes/Yes→ New. S:Old ←No/No→ New. W:Add. Z:Discontinued. F:Interchangeable by set. K:Q'ty Change

++ CONTINUE ++

Copyright (C) YANMAR GLOBAL CS CO., LTD. All RightsReserved.

Fig.81. GENERATOR

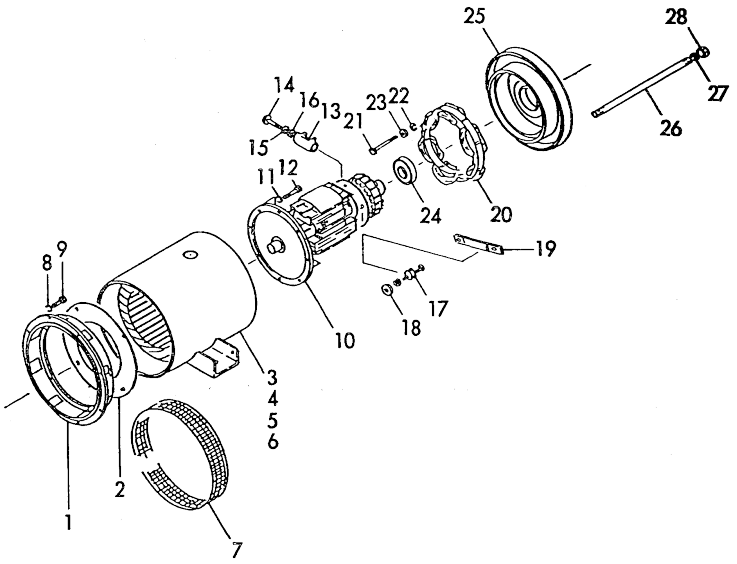

(A)=YEG-8HS
(B)=YEG-10HS
(C)=YEG-20HS
(D)=YEG-24HS
(E)=
(F)=

No.	Lev.	Parts No.	Description	Q'ty (A)	(B)	(C)	(D)	(E)	(F)	I	R
25A	1	982110-20680	BRACKET	1	1						
25B	1	982110-20300	BRACKET			1	1				
26A	1	982118-10070	THROUGH BOLT M10X430		4						
26B	1	982118-10290	BOLT M10X450			4					
26C	1	982118-10100	BOLT, M10X510				4				
26D	1	982118-10380	BOLT, M10X395	4							
27	1	22217-100000	WASHER, SPRING 10	4	4	4	4				
28	1	26716-100002	NUT, M10	4	4	4	4				

Remarks
(M) MISPRINT.

N:Old ◄Yes/No► New. Q:Old ◄No/Yes► New. R:Old ◄Yes/Yes► New. S:Old ◄No/No► New. W:Add. Z:Discontinued. F:Interchangeable by set. K:Q'ty Change

Copyright (C) YANMAR GLOBAL CS CO., LTD. All RightsReserved.

Fig.82. INSTRUMENT PANEL(PREVIOUS)

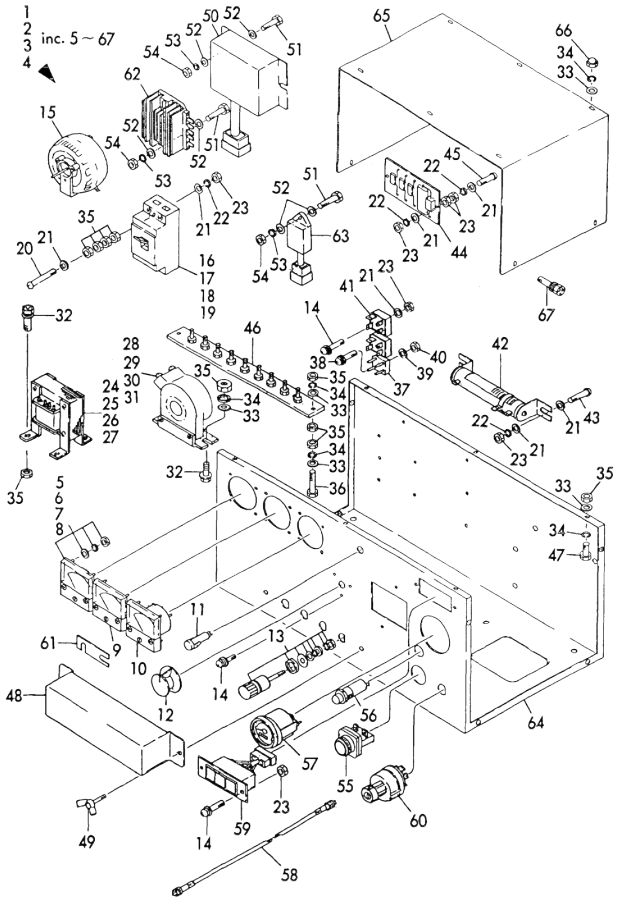

(A)=YEG-8HS
(B)=YEG-10HS
(C)=YEG-20HS
(D)=YEG-24HS
(E)=
(F)=

No.	Lev.	Parts No.	Description	Q'ty (A)	(B)	(C)	(D)	(E)	(F)	I	R
1A	1	982519-30900	PANEL(50HZ/100V)	1							
1B	1	982519-30910	PANEL(50HZ/110V)	1							
1C	1	982519-30920	PANEL(50HZ/200V)	1							
1D	1	982519-30930	PANEL(50HZ/220V)	1							
1E	1	982519-30940	PANEL(50HZ/230V)	1							
1F	1	982519-30950	PANEL(50HZ/240V)	1							
1G	1	982519-30960	PANEL(50HZ/110/220V)	1							
1H	1	982519-30970	PANEL(50HZ/115/230V)	1							
1I	1	982519-30980	PANEL(60HZ/110V)	1							
1J	1	982519-30990	PANEL(60HZ/115V)	1							
1K	1	982519-31000	PANEL(60HZ/120V)	1							
1L	1	982519-31010	PANEL(60HZ/220V)	1							
1M	1	982519-31020	PANEL(60HZ/230V)	1							
1N	1	982519-31030	PANEL(60HZ/240V)	1							
1O	1	982519-31040	PANEL(60HZ/110/220V)	1							
1P	1	982519-31050	PANEL(60HZ/115/230V)	1							
1Q	1	982519-31060	PANEL(60HZ/120/240V)	1							
2A	1	982519-31070	PANEL(50HZ/100V)		1						
2B	1	982519-31080	PANEL(50HZ/110V)		1						
2C	1	982519-31090	PANEL(50HZ/200V)		1						
2D	1	982519-31100	PANEL(50HZ/220V)		1						
2E	1	982519-31110	PANEL(50HZ/230V)		1						
2F	1	982519-31120	PANEL(50HZ/240V)		1						
2G	1	982519-31130	PANEL(50HZ/110/220V)		1						
2H	1	982519-31140	PANEL(50HZ/115/230V)		1						
2I	1	982519-31150	PANEL(60HZ/110V)		1						
2J	1	982519-31160	PANEL(60HZ/115V)		1						
2K	1	982519-31170	PANEL(60HZ/120V)		1						
2L	1	982519-31180	PANEL(60HZ/220V)		1						
2M	1	982519-31190	PANEL(60HZ/230V)		1						
2N	1	982519-31200	PANEL(60HZ/240V)		1						
2O	1	982519-31210	PANEL(60HZ/110/220V)		1						
2P	1	982519-31220	PANEL(60HZ/115/230V)		1						
2Q	1	982519-31230	PANEL(60HZ/120/240V)		1						
3A	1	982519-31240	PANEL(50HZ/100V)			1					
3B	1	982519-31250	PANEL(50HZ/110V)			1					
3C	1	982519-31260	PANEL(50HZ/200V)			1					
3D	1	982519-31270	PANEL(50HZ/220V)			1					
3E	1	982519-31280	PANEL(50HZ/230V)			1					
3F	1	982519-31290	PANEL(50HZ/240V)			1					
3G	1	982519-31300	PANEL(50HZ/110/220V)			1					
3H	1	982519-31310	PANEL(50HZ/115/230V)			1					
3I	1	982519-31320	PANEL(60HZ/110V)			1					
3J	1	982519-31330	PANEL(60HZ/115V)			1					
3K	1	982519-31340	PANEL(60HZ/120V)			1					
3L	1	982519-31350	PANEL(60HZ/220V)			1					
3M	1	982519-31360	PANEL(60HZ/230V)			1					
3N	1	982519-31370	PANEL(60HZ/240V)			1					
3O	1	982519-31380	PANEL(60HZ/110/220V)			1					
3P	1	982519-31390	PANEL(60HZ/115/230V)			1					
3Q	1	982519-31400	PANEL(60HZ/120/240V)			1					

N:Old $\frac{\text{Yes}}{\text{No}}$ New. Q:Old $\frac{\text{No}}{\text{Yes}}$ New. R:Old $\frac{\text{Yes}}{\text{Yes}}$ New. S:Old $\frac{\text{No}}{\text{No}}$ New. W:Add. Z:Discontinued. F:Interchangeable by set. K:Q'ty Change

++ CONTINUE ++

Copyright (C) YANMAR GLOBAL CS CO., LTD. All RightsReserved.

Fig.82. INSTRUMENT PANEL(PREVIOUS)

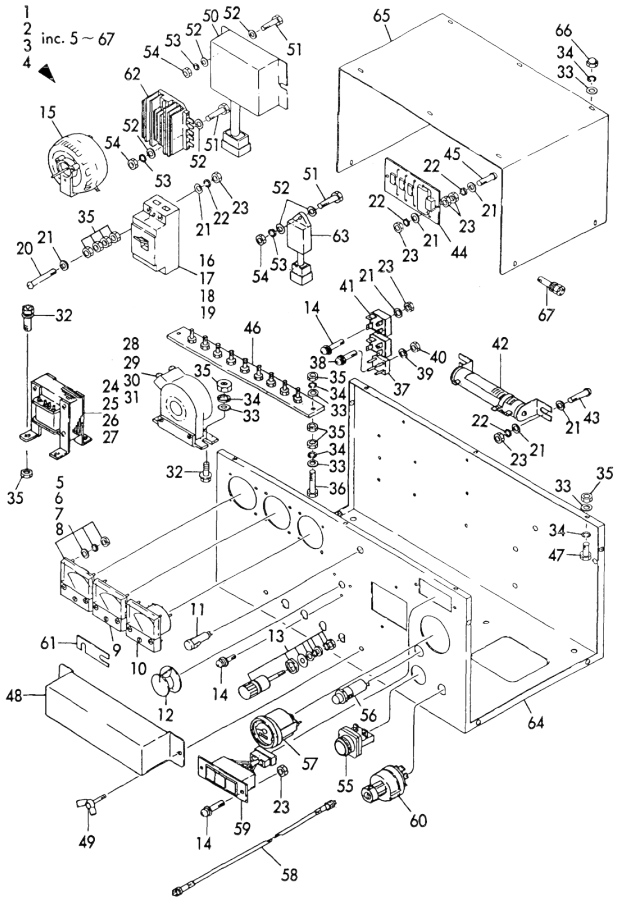

(A)=YEG-8HS
(B)=YEG-10HS
(C)=YEG-20HS
(D)=YEG-24HS
(E)=
(F)=

No.	Lev.	Parts No.	Description	Q'ty (A)	(B)	(C)	(D)	(E)	(F)	I	R
4A	1	982519-31410	PANEL				1				
4B	1	982519-31420	PANEL				1				
4C	1	982519-31430	PANEL				1				
4D	1	982519-31440	PANEL				1				
4E	1	982519-31450	PANEL				1				
4F	1	982519-31460	PANEL				1				
4G	1	982519-31470	PANEL				1				
4H	1	982519-31480	PANEL				1				
4I	1	982519-31490	PANEL				1				
4J	1	982519-31500	PANEL				1				
4K	1	982519-31510	PANEL				1				
4L	1	982519-31520	PANEL				1				
4M	1	982519-31530	PANEL				1				
4N	1	982519-31540	PANEL				1				
4O	1	982519-31550	PANEL				1				
4P	1	982519-31560	PANEL				1				
4Q	1	982519-31570	PANEL				1				
5A	2	982515-60060	AMMETER	1							
5B	2	982515-60050	AMMETER	1							
5C	2	982515-60040	AMMETER	1							
5D	2	982515-60120	AMMETER	1							
5E	2	982515-60120	AMMETER	1							
5F	2	982515-60120	AMMETER	1							
5G	2	982515-60060	AMMETER	1							
5H	2	982515-60060	AMMETER	1							
5I	2	982515-60050	AMMETER	1							
6A	2	982515-60070	AMMETER		1						
6B	2	982515-60060	AMMETER		1						
6C	2	982515-60050	AMMETER		1						
6D	2	982515-60040	AMMETER		1						
6E	2	982515-60120	AMMETER		1						
6F	2	982515-60120	AMMETER		1						
6G	2	982515-60070	AMMETER		1						
6H	2	982515-60070	AMMETER		1						
6I	2	982515-60060	AMMETER		1						
6J	2	982515-60050	AMMETER		1						
6K	2	982515-60050	AMMETER		1						
6L	2	982515-60040	AMMETER		1						
6M	2	982515-60130	AMMETER		1						
6N	2	982515-60130	AMMETER		1						
6O	2	982515-60120	AMMETER		1						
7A	2	982515-60080	AMMETER			1					
7B	2	982515-60060	AMMETER			1					
7C	2	982515-60060	AMMETER			1					
7D	2	982515-60050	AMMETER			1					
7E	2	982515-60140	AMMETER			1					
7F	2	982515-60130	AMMETER			1					
7G	2	982515-60060	AMMETER			1					
7H	2	982515-60140	AMMETER			1					
7I	2	982515-60140	AMMETER			1					
7J	2	982515-60140	AMMETER			1					

N:Old ←Yes/No→ New. Q:Old ←No/Yes→ New. R:Old ←Yes/Yes→ New. S:Old ←No/No→ New. W:Add. Z:Discontinued. F:Interchangeable by set. K:Q'ty Change

++ CONTINUE ++

Copyright (C) YANMAR GLOBAL CS CO., LTD. All RightsReserved.

Fig.82. INSTRUMENT PANEL(PREVIOUS)

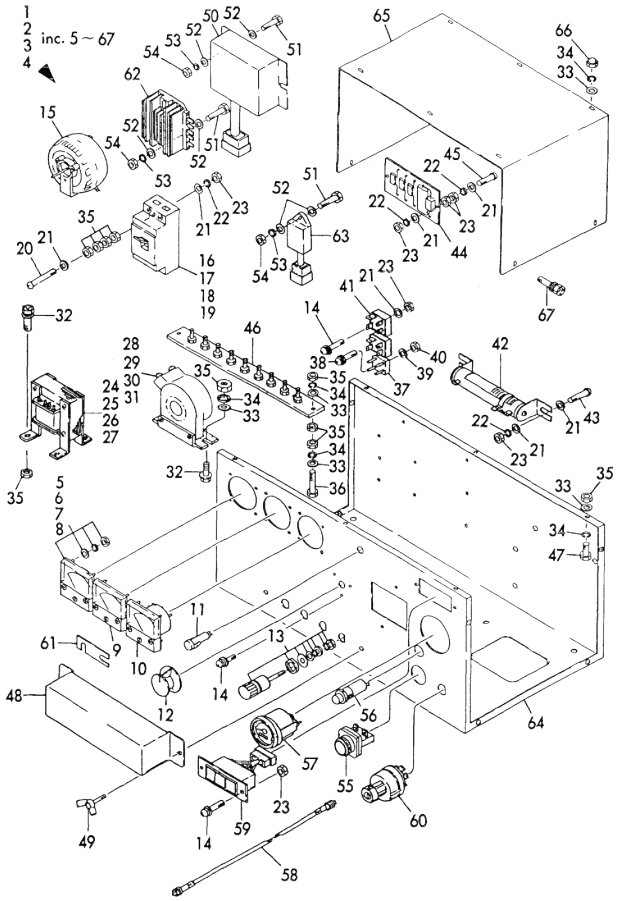

(A)=YEG-8HS
(B)=YEG-10HS
(C)=YEG-20HS
(D)=YEG-24HS
(E)=
(F)=

No.	Lev.	Parts No.	Description	Q'ty (A)	(B)	(C)	(D)	(E)	(F)	I	R
8A	2	982515-60090	AMMETER(50/60HZ/100V				1				
8B	2	982515-60090	AMMETER(50/60HZ/100V				1				
8C	2	982515-60090	AMMETER(50/60HZ/100V				1				
8D	2	982515-60090	AMMETER(50/60HZ/100V				1				
8E	2	982515-60070	AMMETER				1				
8F	2	982515-60070	AMMETER				1				
8G	2	982515-60060	AMMETER				1				
8H	2	982515-60060	AMMETER				1				
8I	2	982515-60150	AMMETER(60HZ110/220V				1				
8J	2	982515-60140	AMMETER				1				
8K	2	982515-60070	AMMETER				1				
8L	2	982515-60070	AMMETER				1				
8M	2	982515-60070	AMMETER				1				
8N	2	982515-60150	AMMETER(60HZ110/220V				1				
8O	2	982515-60150	AMMETER(60HZ110/220V				1				
8P	2	982515-60150	AMMETER(60HZ110/220V				1				
9A	2	982510-50010	VOLTMETER	1	1	1	1				
9B	2	982510-50010	VOLTMETER	1	1	1	1				
9C	2	982510-50010	VOLTMETER	1	1	1	1				
9D	2	982510-50010	VOLTMETER	1	1	1	1				
9E	2	982510-50040	VOLTMETER (200V)	1	1	1	1				
9F	2	982510-50040	VOLTMETER (200V)	1	1	1	1				
9G	2	982510-50040	VOLTMETER (200V)	1	1	1	1				
9H	2	982510-50040	VOLTMETER (200V)	1	1	1	1				
9I	2	982510-50080	VOLTMETER	1	1	1	1				
10A	2	982510-80220	METER, FREQUENCY	1	1	1	1				
10B	2	982510-80220	METER, FREQUENCY	1	1	1	1				
10C	2	982510-80220	METER, FREQUENCY	1	1	1	1				
10D	2	982510-80220	METER, FREQUENCY	1	1	1	1				
10E	2	982510-80056	METER, FREQUENCY	1	1	1	1				
10F	2	982510-80056	METER, FREQUENCY	1	1	1	1				
10G	2	982510-80056	METER, FREQUENCY	1	1	1	1				
10H	2	982510-80056	METER, FREQUENCY	1	1	1	1				
10I	2	982510-80220	METER, FREQUENCY	1	1	1	1				
11A	2	982511-60010	LAMP	1	1	1	1				
11B	2	982511-60010	LAMP	1	1	1	1				
11C	2	982511-60010	LAMP	1	1	1	1				
11D	2	982511-60010	LAMP	1	1	1	1				
11E	2	982511-60020	LAMP	1	1	1	1				
11F	2	982511-60020	LAMP	1	1	1	1				
11G	2	982511-60020	LAMP	1	1	1	1				
11H	2	982511-60020	LAMP	1	1	1	1				
11I	2	982511-60010	LAMP	1	1	1	1				
12	2	982511-90020	KNOB	1	1	1	1				
13A	2	982513-80130	TERMINAL	2	2						
13B	2	982513-80130	TERMINAL	2	2						
13C	2	982513-80130	TERMINAL	2	2						
13D	2	982513-80130	TERMINAL	2	2						
13E	2	982513-80040	TERMINAL	2	2						
13F	2	982513-80040	TERMINAL	2	2						
13G	2	982513-80040	TERMINAL	2	2						

N:Old ←Yes/No→ New. Q:Old ←No/Yes→ New. R:Old ←Yes/Yes→ New. S:Old ←No/No→ New. W:Add. Z:Discontinued. F:Interchangeable by set. K:Q'ty Change

++ CONTINUE ++

Copyright (C) YANMAR GLOBAL CS CO., LTD. All RightsReserved.

Fig.82. INSTRUMENT PANEL(PREVIOUS)

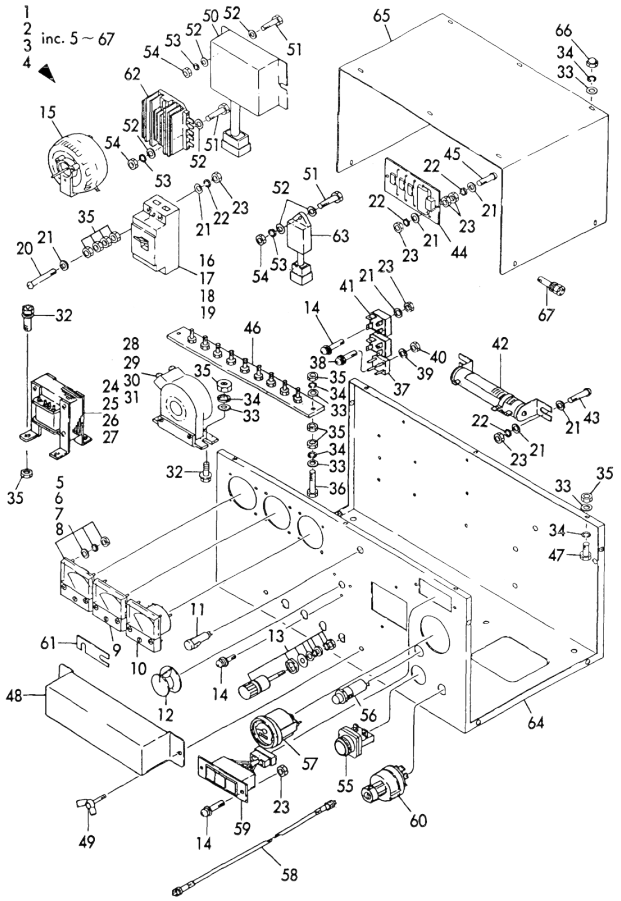

(A)=YEG-8HS
(B)=YEG-10HS
(C)=YEG-20HS
(D)=YEG-24HS
(E)=
(F)=

No.	Lev.	Parts No.	Description	Q'ty (A)	(B)	(C)	(D)	(E)	(F)	I	R
13H	2	982513-80040	TERMINAL	2	2						
13I	2	982513-80040	TERMINAL	4	4						
13J	2	982513-80090	TERMINAL			2	2				
13K	2	982513-80090	TERMINAL			2	2				
13L	2	982513-80090	TERMINAL			2	2				
13M	2	982513-80090	TERMINAL			2	2				
13N	2	982513-80130	TERMINAL			2	2				
13O	2	982513-80130	TERMINAL			2	2				
13P	2	982513-80130	TERMINAL			2	2				
13Q	2	982513-80130	TERMINAL			2	2				
13R	2	982513-80130	TERMINAL			4	4				
14	2	982343-04015	SCREW M 4X15	7	7	7	7				
15	2	982511-00020	REGULATOR, VOLTAGE	1	1	1	1				
16A	2	982512-40510	MAIN SWITCH	1							
16B	2	982512-40520	MAIN SWITCH	1							
16C	2	982512-40520	MAIN SWITCH	1							
16D	2	982512-40520	MAIN SWITCH	1							
16E	2	982512-40510	MAIN SWITCH	1							
16F	2	982512-40510	MAIN SWITCH	1							
16G	2	982512-40510	MAIN SWITCH	1							
16H	2	982512-40510	MAIN SWITCH	1							
16I	2	982512-40510	MAIN SWITCH	1							
16J	2	982512-40510	MAIN SWITCH	1							
17A	2	982512-40530	MAIN SWITCH		1						
17B	2	982512-40520	MAIN SWITCH		1						
17C	2	982512-40520	MAIN SWITCH		1						
17D	2	982512-40530	MAIN SWITCH		1						
17E	2	982512-40530	MAIN SWITCH		1						
17F	2	982512-40530	MAIN SWITCH		1						
17G	2	982512-40530	MAIN SWITCH		1						
17H	2	982512-40530	MAIN SWITCH		1						
17I	2	982512-40530	MAIN SWITCH		1						
17J	2	982512-40520	MAIN SWITCH		1						
17K	2	982512-40520	MAIN SWITCH		1						
17L	2	982512-40520	MAIN SWITCH		1						
18A	2	982512-40750	M,SWITCH(50HZ/100V)			1					
18B	2	982512-40750	M,SWITCH(50HZ/100V)			1					
18C	2	982512-40750	M,SWITCH(50HZ/100V)			1					
18D	2	982512-40750	M,SWITCH(50HZ/100V)			1					
18E	2	982512-40750	M,SWITCH(50HZ/100V)			1					
18F	2	982512-40740	M,SWITCH(50HZ/230V)			1					
18G	2	982512-40740	M,SWITCH(50HZ/230V)			1					
18H	2	982512-40740	M,SWITCH(50HZ/230V)			1					
18I	2	982512-40750	M,SWITCH(50HZ/100V)			1					
19A	2	982512-40760	M.SWITCH(60HZ/ALL)				1				
19B	2	982512-40760	M.SWITCH(60HZ/ALL)				1				
19C	2	982512-40760	M.SWITCH(60HZ/ALL)				1				
19D	2	982512-40760	M.SWITCH(60HZ/ALL)				1				
19E	2	982512-40760	M.SWITCH(60HZ/ALL)				1				
19F	2	982512-40750	M,SWITCH(50HZ/100V)				1				
19G	2	982512-40750	M,SWITCH(50HZ/100V)				1				

N:Old ←Yes/No→ New. Q:Old ←No/Yes→ New. R:Old ←Yes/Yes→ New. S:Old ←No/No→ New. W:Add. Z:Discontinued. F:Interchangeable by set. K:Q'ty Change

++ CONTINUE ++

Copyright (C) YANMAR GLOBAL CS CO., LTD. All RightsReserved.

Fig.82. INSTRUMENT PANEL(PREVIOUS)

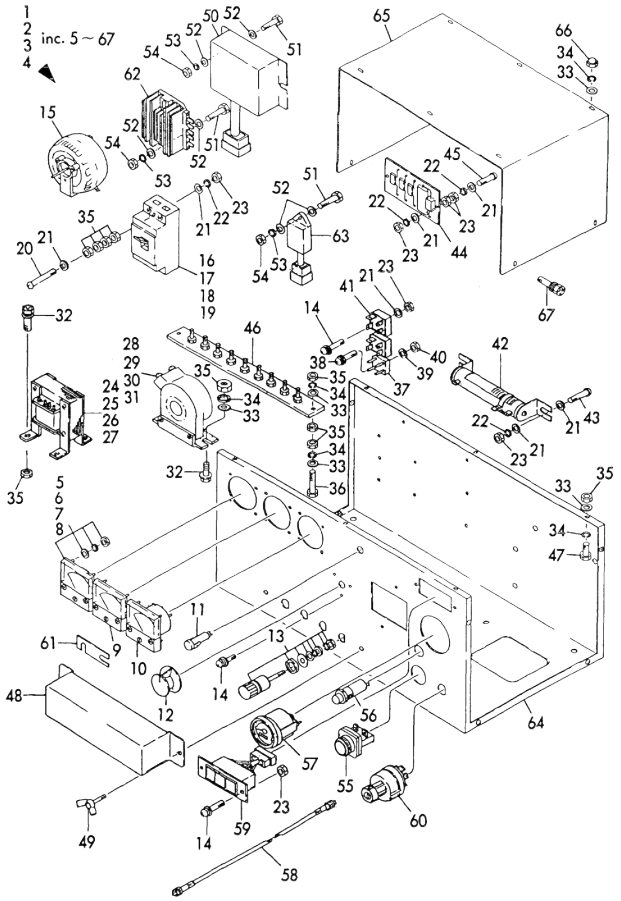

(A)=YEG-8HS
(B)=YEG-10HS
(C)=YEG-20HS
(D)=YEG-24HS
(E)=
(F)=

No.	Lev.	Parts No.	Description	Q'ty (A)	(B)	(C)	(D)	(E)	(F)	I	R
19H	2	982512-40750	M,SWITCH(50HZ/100V)				1				
19I	2	982512-40760	M.SWITCH(60HZ/ALL)				1				
20	2	982330-00480	SCREW	2	2	2	2				
21	2	22117-040000	WASHER, 4	14	14	18	18				
22	2	22217-040000	WASHER, SPRING 4	12	12	16	16				
23	2	26716-040002	NUT, M4	10	10	12	12				
24A	2	982515-90010	CUR,TRANS(50HZ/100V)	1							
24B	2	982515-90020	CUR,TRANS(50HZ/110V)	1							
24C	2	982515-90030	CUR,TRANS(50HZ/200V)	1							
24D	2	982515-90040	CUR,TRANS(50HZ/220V)	1							
24E	2	982515-90050	CUR,TRANS(50HZ/230V)	1							
24F	2	982515-90060	CUR,TRANS(50HZ/240V)	1							
24G	2	982515-90070	CUR,TRANS(50HZ110/22	1							
24H	2	982515-90080	CUR,TRANS(50HZ115/23	1							
24I	2	982515-90090	CUR,TRANS(60HZ/110V)	1							
24J	2	982515-90100	CUR,TRANS(60HZ/115V)	1							
24K	2	982515-90110	CUR,TRANS(60HZ/120V)	1							
24L	2	982515-90120	CUR,TRANS(60HZ/220V)	1							
24M	2	982515-90130	CUR,TRANS(60HZ/230V)	1							
24N	2	982515-90140	CUR,TRANS(60HZ/240V)	1							
24O	2	982515-90150	CUR,TRANS(60HZ110/22	1							
24P	2	982515-90160	CUR,TRANS(60HZ115/23	1							
24Q	2	982515-90170	CUR,TRANS(60HZ120/24	1							
25A	2	982515-90180	CUR,TRANS(50HZ/100V)		1						
25B	2	982515-90190	CUR,TRANS(50HZ/110V)		1						
25C	2	982515-90200	CUR,TRANS(50HZ/200V)		1						
25D	2	982515-90210	CUR,TRANS(50HZ/220V)		1						
25E	2	982515-90220	CUR,TRANS(50HZ/230V)		1						
25F	2	982515-90230	CUR,TRANS(50HZ/240V)		1						
25G	2	982515-90240	CUR,TRANS(50HZ110/22		1						
25H	2	982515-90250	CUR,TRANS(50HZ115/23		1						
25I	2	982515-90260	CUR,TRANS(60HZ/110V)		1						
25J	2	982515-90270	CUR,TRANS(60HZ/115V)		1						
25K	2	982515-90280	CUR,TRANS(60HZ/120V)		1						
25L	2	982515-90290	CUR,TRANS(60HZ/220V)		1						
25M	2	982515-90300	CUR,TRANS(60HZ/230V)		1						
25N	2	982515-90310	CUR,TRANS(60HZ/240V)		1						
25O	2	982515-90320	CUR,TRANS(60HZ110/22		1						
25P	2	982515-90330	CUR,TRANS(60HZ115/23		1						
25Q	2	982515-90340	CUR,TRANS(60HZ120/24		1						
26A	2	982515-90350	CUR,TRANS(50HZ/100V)			1					
26B	2	982515-90360	CUR,TRANS(50HZ/110V)			1					
26C	2	982515-90370	CUR,TRANS(50HZ/200V)			1					
26D	2	982515-90380	CUR,TRANS(50HZ/220V)			1					
26E	2	982515-90390	CUR,TRANS(50HZ/230V)			1					
26F	2	982515-90400	CUR,TRANS(50HZ/240V)			1					
26G	2	982515-90410	CUR,TRANS(50HZ110/22			1					
26H	2	982515-90420	CUR,TRANS(50HZ115/23			1					
26I	2	982515-90430	CUR,TRANS(60HZ/110V)			1					
26J	2	982515-90440	CUR,TRANS(60HZ/115V)			1					
26K	2	982515-90450	CUR,TRANS(60HZ/120V)			1					

N:Old ←Yes/No→ New. Q:Old ←No/Yes→ New. R:Old ←Yes/Yes→ New. S:Old ←No/No→ New. W:Add. Z:Discontinued. F:Interchangeable by set. K:Q'ty Change

++ CONTINUE ++

Copyright (C) YANMAR GLOBAL CS CO., LTD. All RightsReserved.

Fig.82. INSTRUMENT PANEL(PREVIOUS)

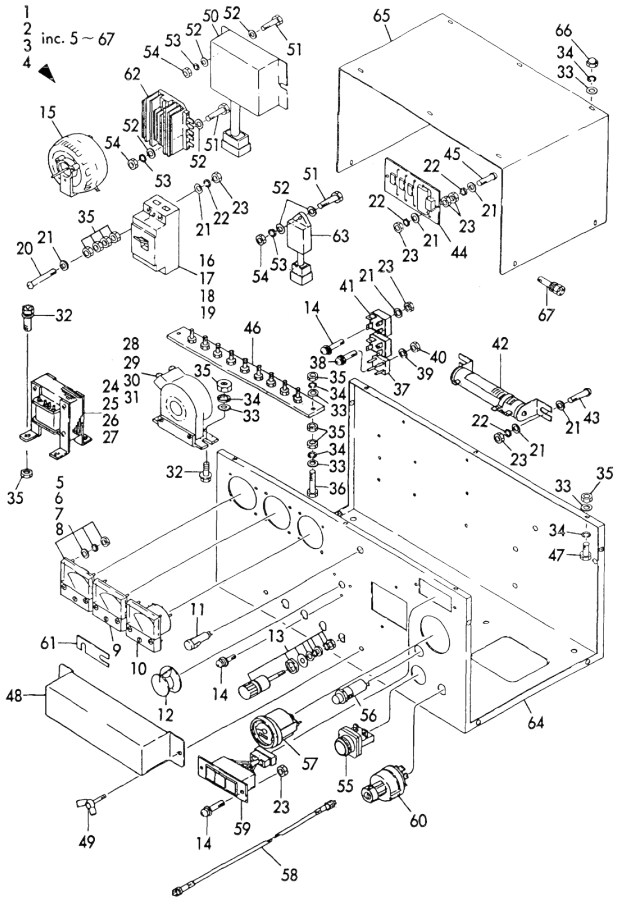

(A)=YEG-8HS
(B)=YEG-10HS
(C)=YEG-20HS
(D)=YEG-24HS
(E)=
(F)=

No.	Lev.	Parts No.	Description	Q'ty (A)	(B)	(C)	(D)	(E)	(F)	I	R
26L	2	982515-90460	CUR,TRANS(60HZ/220V)			1					
26M	2	982515-90470	CUR,TRANS(60HZ/230V)			1					
26N	2	982515-90480	CUR,TRANS(60HZ/240V)			1					
26O	2	982515-90490	CUR,TRANS(60HZ110/22			1					
26P	2	982515-90500	CUR,TRANS(60HZ115/23			1					
26Q	2	982515-90510	CUR,TRANS(60HZ120/24			1					
27A	2	982515-90520	CUR,TRANS(50HZ/100V)				1				
27B	2	982515-90530	CUR,TRANS(50HZ/110V)				1				
27C	2	982515-90540	CUR,TRANS(50HZ/200V)				1				
27D	2	982515-90550	CUR,TRANS(50HZ/220V)				1				
27E	2	982515-90560	CUR,TRANS(50HZ/230V)				1				
27F	2	982515-90570	CUR,TRANS(50HZ/240V)				1				
27G	2	982515-90580	CUR,TRANS(50HZ110/22				1				
27H	2	982515-90590	CUR,TRANS(50HZ115/23				1				
27I	2	982515-90600	CUR,TRANS(60HZ/110V)				1				
27J	2	982515-90610	CUR,TRANS(60HZ/115V)				1				
27K	2	982515-90620	CUR,TRANS(60HZ/120V)				1				
27L	2	982515-90630	CUR,TRANS(60HZ/220V)				1				
27M	2	982515-90640	CUR,TRANS(60HZ/230V)				1				
27N	2	982515-90650	CUR,TRANS(60HZ/240V)				1				
27O	2	982515-90660	CUR,TRANS(60HZ110/22				1				
27P	2	982515-90670	CUR,TRANS(60HZ115/23				1				
27Q	2	982515-90680	CUR,TRANS(60HZ120/24				1				
28A	2	982513-90070	TRANSFORMER	1							
28B	2	982513-90080	TRANSFORMER	1							
28C	2	982513-90070	TRANSFORMER	1							
28D	2	982513-90070	TRANSFORMER	1							
28E	2	982513-90070	TRANSFORMER	1							
28F	2	982513-90070	TRANSFORMER	1							
28G	2	982513-90070	TRANSFORMER	1							
28H	2	982513-90070	TRANSFORMER	1							
28I	2	982513-90080	TRANSFORMER	1							
29A	2	982513-90080	TRANSFORMER		1						
29B	2	982513-90080	TRANSFORMER		1						
29C	2	982513-90070	TRANSFORMER		1						
29D	2	982513-90070	TRANSFORMER		1						
29E	2	982513-90070	TRANSFORMER		1						
29F	2	982513-90070	TRANSFORMER		1						
29G	2	982513-90070	TRANSFORMER		1						
29H	2	982513-90070	TRANSFORMER		1						
29I	2	982513-90080	TRANSFORMER		1						
29J	2	982513-90080	TRANSFORMER		1						
29K	2	982513-90080	TRANSFORMER		1						
29L	2	982513-90080	TRANSFORMER		1						
29M	2	982513-90070	TRANSFORMER		1						
29N	2	982513-90070	TRANSFORMER		1						
29O	2	982513-90080	TRANSFORMER		1						
29P	2	982513-90080	TRANSFORMER		1						
29Q	2	982513-90070	TRANSFORMER		1						
30A	2	982513-90150	TRANSFORMER			1					
30B	2	982513-90150	TRANSFORMER			1					

N:Old $\frac{\text{Yes}}{\text{No}}$ New. Q:Old $\frac{\text{No}}{\text{Yes}}$ New. R:Old $\frac{\text{Yes}}{\text{Yes}}$ New. S:Old $\frac{\text{No}}{\text{No}}$ New. W:Add. Z:Discontinued. F:Interchangeable by set. K:Q'ty Change

++ CONTINUE ++

Copyright (C) YANMAR GLOBAL CS CO., LTD. All RightsReserved.

Fig.82. INSTRUMENT PANEL(PREVIOUS)

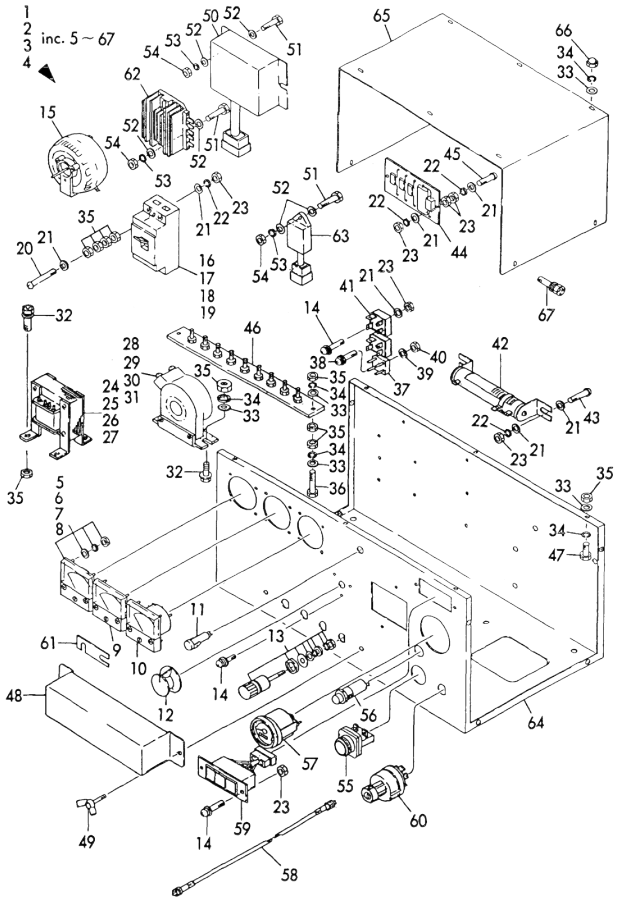

(A)=YEG-8HS
(B)=YEG-10HS
(C)=YEG-20HS
(D)=YEG-24HS
(E)=
(F)=

No.	Lev.	Parts No.	Description	Q'ty (A)	(B)	(C)	(D)	(E)	(F)	I	R
30C	2	982513-90150	TRANSFORMER			1					
30D	2	982513-90150	TRANSFORMER			1					
30E	2	982513-90070	TRANSFORMER			1					
30F	2	982513-90070	TRANSFORMER			1					
30G	2	982513-90080	TRANSFORMER			1					
30H	2	982513-90080	TRANSFORMER			1					
30I	2	982513-90070	TRANSFORMER			1					
30J	2	982513-90080	TRANSFORMER			1					
30K	2	982513-90070	TRANSFORMER			1					
30L	2	982513-90070	TRANSFORMER			1					
30M	2	982513-90070	TRANSFORMER			1					
30N	2	982513-90070	TRANSFORMER			1					
30O	2	982513-90070	TRANSFORMER			1					
30P	2	982513-90070	TRANSFORMER			1					
31A	2	982513-90160	TRANSMITTER, 200-220				1				
31B	2	982513-90160	TRANSMITTER, 200-220				1				
31C	2	982513-90160	TRANSMITTER, 200-220				1				
31D	2	982513-90160	TRANSMITTER, 200-220				1				
31E	2	982513-90080	TRANSFORMER				1				
31F	2	982513-90080	TRANSFORMER				1				
31G	2	982513-90070	TRANSFORMER				1				
31H	2	982513-90070	TRANSFORMER				1				
31I	2	982513-90080	TRANSFORMER				1				
31J	2	982513-90070	TRANSFORMER				1				
31K	2	982513-90080	TRANSFORMER				1				
31L	2	982513-90080	TRANSFORMER				1				
31M	2	982513-90080	TRANSFORMER				1				
31N	2	982513-90080	TRANSFORMER				1				
31O	2	982513-90080	TRANSFORMER				1				
31P	2	982513-90080	TRANSFORMER				1				
32	2	982343-05014	BOLT, M5X14	6	6	6	6				
33	2	22117-050000	WASHER, 5	26	26	26	26				
34	2	22217-050000	WASHER, SPRING 5	22	22	22	22				
35	2	26716-050002	NUT, M5	24	24	24	24				
36	2	26116-050502	BOLT, M5X 50 PLATED	2	2	2	2				
37	2	982513-10060	RECTIFIER	1	1	1	1				
38	2	982343-03015	SCREW, M3X15	1	1	1	1				
39	2	982030-10300	WASHER 3	1	1	1	1				
40	2	982023-10300	NUT M3	1	1	1	1				
41	2	982513-10050	RECTIFIER	1	1	1	1				
42	2	982511-10040	RESISTOR 60W-10	1	1	1	1				
43	2	26557-040122	SCREW, M4X12	2	2	2	2				
44	2	982513-70150	SURGE ABSORBER	1	1	1	1				
45	2	26557-040122	SCREW, M4X12	2	2	2	2				
46A	2	982511-50560	TAP,TERMINAL(SINGLEV	1	1	1	1				
46B	2	982511-50570	TAP,TERMINAL(DUAL V)	1	1	1	1				
47	2	26116-050152	BOLT M 5X 15 PLATED	6	6	6	6				
48A	2	982518-60240	GUARD	1	1						
48B	2	982518-60270	TERMINAL GUARD			1	1				
49	2	982317-00070	BOLT	2	2	2	2				
50	2	982514-00040	RELAY	1	1	1	1				

N:Old ←Yes/No→ New. Q:Old ←No/Yes→ New. R:Old ←Yes/Yes→ New. S:Old ←No/No→ New. W:Add. Z:Discontinued. F:Interchangeable by set. K:Q'ty Change

++ CONTINUE ++

Copyright (C) YANMAR GLOBAL CS CO., LTD. All RightsReserved.

Fig.82. INSTRUMENT PANEL(PREVIOUS)

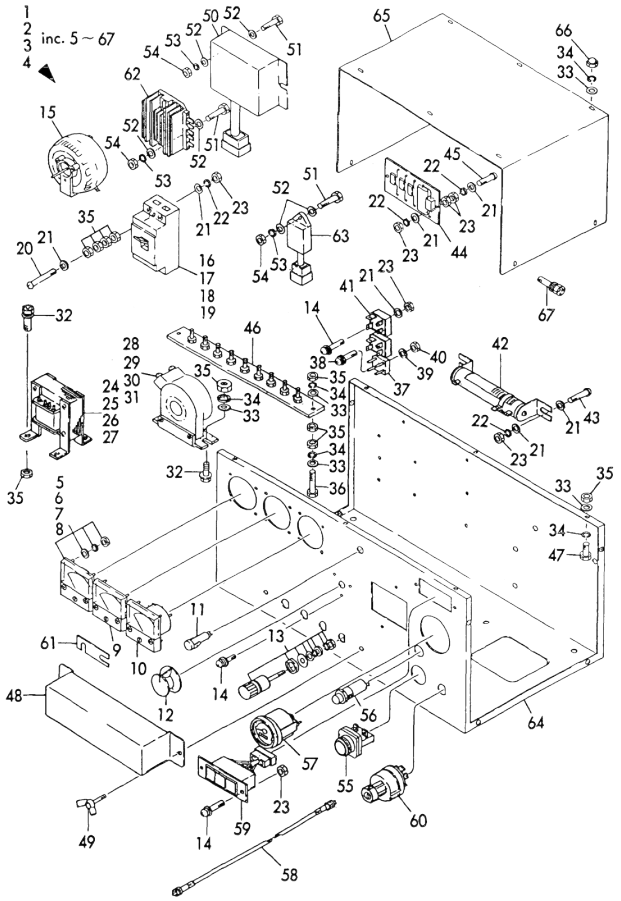

(A)=YEG-8HS
(B)=YEG-10HS
(C)=YEG-20HS
(D)=YEG-24HS
(E)=
(F)=

No.	Lev.	Parts No.	Description	Q'ty (A)	(B)	(C)	(D)	(E)	(F)	I	R
51	2	26116-060252	BOLT, M6X 25 PLATED	5	5	5	5				
52	2	22117-060000	WASHER, 6	10	10	10	10				
53	2	22217-060000	WASHER, SPRING 6	5	5	5	5				
54	2	26756-060002	NUT, LOCK M6	7	7	7	7				
55	2	982517-70100	SWITCH	1	1	1	1				
56	2	124559-99791	LAMP, PILOT	1	1	1	1				
57	2	171080-91100	TACHOMETER	1	1	1	1				
58A	2	194145-56901	CABLE ASSY, METER	1	1	1					
58B	2	42130-502220	CABLE, TACHOMETER				1				
59	2	170038-91310	LAMP	1	1	1	1				
60	2	171400-91251	SWITCH, STARTER	1	1	1	1				
61A	2	982513-80410	CONNECTOR	2	2						
61B	2	982513-80420	CONNECTOR			2	2				
62	2	119660-77710	LIMITER, CURRENT 15A	1	1	1	1				
63	2	124559-77971	LAMP, PILOT	1	1	1	1				
64A	2	982515-70840	P.BOX(5,60HZ/SINGLEV	1							
64B	2	982515-70850	P.BOX(5,60HZ/DUAL V)	1							
64C	2	982515-70860	P.BOX(50HZ/100V)		1						
64D	2	982515-70870	PANEL B(50HZ110-240V		1						
64E	2	982515-70880	PANEL B(50HZ/DUAL V)		1						
64F	2	982515-70890	PANEL B(60HZ/110V)		1						
64G	2	982515-70890	PANEL B(60HZ/110V)		1						
64H	2	982515-70900	PANEL B(60HZ/220V)		1						
64I	2	982515-70900	PANEL B(60HZ/220V)		1						
64J	2	982515-70910	PANEL B(60HZ/120V)		1						
64K	2	982515-70910	PANEL B(60HZ/120V)		1						
64L	2	982515-70920	PANEL B(60HZ110/220V		1						
64M	2	982515-70920	PANEL B(60HZ110/220V		1						
64N	2	982515-70930	PANEL B(60HZ/120V)		1						
64O	2	982515-70930	PANEL B(60HZ/120V)		1						
64P	2	982515-70940	PANEL B(5,60HZ100-12			1					
64Q	2	982515-70950	PANEL B(5,60HZ200-24			1					
64R	2	982515-70960	PANEL B(5,60HZDUAL V			1					
64S	2	982515-70970	PANEL B(5,60HZ100-12				1				
64T	2	982515-70980	PANEL B(50HZ/200-220				1				
64U	2	982515-70990	PANEL B(50HZ/230-240				1				
64V	2	982515-71000	PANEL				1				
64W	2	982515-71010	PANEL				1				
64X	2	982515-71020	PANEL				1				
64Y	2	982515-71030	PANEL B(60HZ/DUAL V)				1				
65	2	982515-80320	COVER, PANEL	1	1	1	1				
66	2	982036-05002	CAP NUT M 5	6	6	6	6				
67	2	982343-05014	BOLT, M5X14	4	4	4	4				

N:Old ←Yes/No→ New. Q:Old ←No/Yes→ New. R:Old ←Yes/Yes→ New. S:Old ←No/No→ New. W:Add. Z:Discontinued. F:Interchangeable by set. K:Q'ty Change

Copyright (C) YANMAR GLOBAL CS CO., LTD. All RightsReserved.

Fig.83. INSTRUMENT PANEL(NEW)

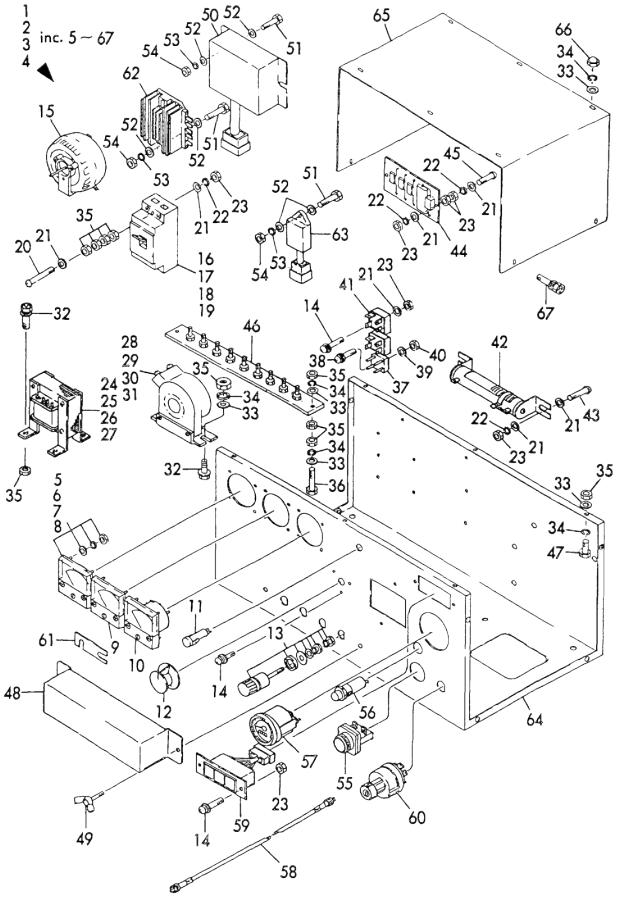

(A)=YEG-8HS
(B)=YEG-10HS
(C)=YEG-20HS
(D)=YEG-24HS
(E)=
(F)=

No.	Lev.	Parts No.	Description	Q'ty (A)	(B)	(C)	(D)	(E)	(F)	I	R
1A	1	982519-30901	PANEL, 50HZ/100V	1							
1B	1	982519-30911	PANEL, 50HZ/110V	1							
1C	1	982519-30921	PANEL, 50HZ/200V	1							
1D	1	982519-30931	PANEL, 50HZ/220V	1							
1E	1	982519-30941	PANEL, 50HZ/230V	1							
1F	1	982519-30951	PANEL, 50HZ/240V	1							
1G	1	982519-30961	PANEL, 50HZ/110/220V	1							
1H	1	982519-30971	PANEL, 50HZ/115/230V	1							
1I	1	982519-30981	PANEL, 60HZ/110V	1							
1J	1	982519-30991	PANEL, 60HZ/115V	1							
1K	1	982519-31001	PANEL, 60HZ/120V	1							
1L	1	982519-31011	PANEL, 60HZ/220V	1							
1M	1	982519-31021	PANEL, 60HZ/230V	1							
1N	1	982519-31031	PANEL, 60HZ/240V	1							
1O	1	982519-31041	PANEL, 60HZ/110/220V	1							
1P	1	982519-31051	PANEL, 60HZ/115/230V	1							
1Q	1	982519-31061	PANEL, 60HZ/120/240V	1							
2A	1	982519-31071	PANEL, 50HZ/100V		1						
2B	1	982519-31081	PANEL, 50HZ/110V		1						
2C	1	982519-31091	PANEL, 50HZ/200V		1						
2D	1	982519-31101	PANEL, 50HZ/220V		1						
2E	1	982519-31111	PANEL, 50HZ/230V		1						
2F	1	982519-31121	PANEL, 50HZ/240V		1						
2G	1	982519-31131	PANEL, 50HZ/110/220V		1						
2H	1	982519-31141	PANEL, 50HZ/115/230V		1						
2I	1	982519-31151	PANEL, 60HZ/110V		1						
2J	1	982519-31161	PANEL, 60HZ/115V		1						
2K	1	982519-31171	PANEL, 60HZ/120V		1						
2L	1	982519-31181	PANEL, 60HZ/220V		1						
2M	1	982519-31191	PANEL, 60HZ/230V		1						
2N	1	982519-31201	PANEL, 60HZ/240V		1						
2O	1	982519-31211	PANEL, 60HZ/110/220V		1						
2P	1	982519-31221	PANEL, 60HZ/115/230V		1						
2Q	1	982519-31231	PANEL, 60HZ/120/240V		1						
3A	1	982519-31241	PANEL, 50HZ/100V			1					
3B	1	982519-31251	PANEL, 50HZ/110V			1					
3C	1	982519-31261	PANEL, 50HZ/200V			1					
3D	1	982519-31271	PANEL, 50HZ/220V			1					
3E	1	982519-31281	PANEL, 50HZ/230V			1					
3F	1	982519-31291	PANEL, 50HZ/240V			1					
3G	1	982519-31301	PANEL, 50HZ/110/220V			1					
3H	1	982519-31311	PANEL, 50HZ/115/230V			1					
3I	1	982519-31321	PANEL, 60HZ/110V			1					
3J	1	982519-31331	PANEL, 60HZ/115V			1					
3K	1	982519-31341	PANEL, 60HZ/120V			1					
3L	1	982519-31351	PANEL, 60HZ/220V			1					
3M	1	982519-31361	PANEL, 60HZ/230V			1					
3N	1	982519-31371	PANEL, 60HZ/240V			1					
3O	1	982519-31381	PANEL, 60HZ/110/220V			1					
3P	1	982519-31391	PANEL, 60HZ/115/230V			1					
3Q	1	982519-31401	PANEL, 60HZ/120/240V			1					

N:Old $\frac{\text{Yes}}{\text{No}}$ New. Q:Old $\frac{\text{No}}{\text{Yes}}$ New. R:Old $\frac{\text{Yes}}{\text{Yes}}$ New. S:Old $\frac{\text{No}}{\text{No}}$ New. W:Add. Z:Discontinued. F:Interchangeable by set. K:Q'ty Change

++ CONTINUE ++

Copyright (C) YANMAR GLOBAL CS CO., LTD. All RightsReserved.

Fig.83. INSTRUMENT PANEL(NEW)

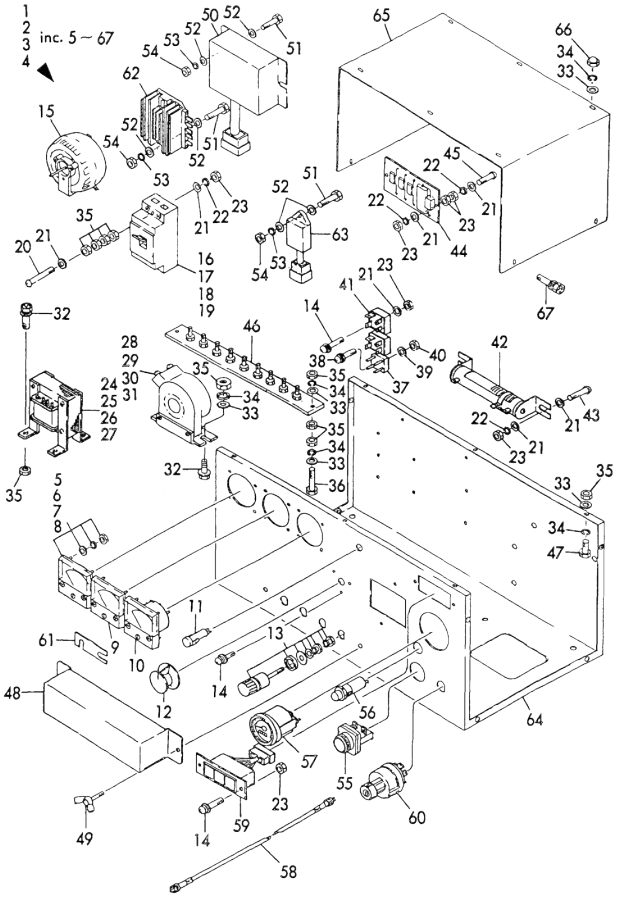

(A)=YEG-8HS (D)=YEG-24HS
(B)=YEG-10HS (E)=
(C)=YEG-20HS (F)=

No.	Lev.	Parts No.	Description	Q'ty (A)	(B)	(C)	(D)	(E)	(F)	I	R
4A	1	982519-31411	PANEL, 50HZ/100V				1				
4B	1	982519-31421	PANEL, 50HZ/110V				1				
4C	1	982519-31431	PANEL, 50HZ/200V				1				
4D	1	982519-31441	PANEL, 50HZ/220V				1				
4E	1	982519-31451	PANEL, 50HZ/230V				1				
4F	1	982519-31461	PANEL, 50HZ/240V				1				
4G	1	982519-31471	PANEL, 50HZ/110/220V				1				
4H	1	982519-31481	PANEL, 50HZ/115/230V				1				
4I	1	982519-31491	PANEL, 60HZ/110V				1				
4J	1	982519-31501	PANEL, 60HZ/115V				1				
4K	1	982519-31511	PANEL, 60HZ/120V				1				
4L	1	982519-31521	PANEL, 60HZ/220V				1				
4M	1	982519-31531	PANEL, 60HZ/230V				1				
4N	1	982519-31541	PANEL, 60HZ/240V				1				
4O	1	982519-31551	PANEL, 60HZ/110/220V				1				
4P	1	982519-31561	PANEL, 60HZ/115/230V				1				
4Q	1	982519-31571	PANEL, 60HZ/120/240V				1				
5A	2	982515-60060	AMMETER	1							
5B	2	982515-60050	AMMETER	1							
5C	2	982515-60040	AMMETER	1							
5D	2	982515-60120	AMMETER	1							
5E	2	982515-60120	AMMETER	1							
5F	2	982515-60120	AMMETER	1							
5G	2	982515-60060	AMMETER	1							
5H	2	982515-60060	AMMETER	1							
5I	2	982515-60050	AMMETER	1							
6A	2	982515-60070	AMMETER		1						
6B	2	982515-60060	AMMETER		1						
6C	2	982515-60050	AMMETER		1						
6D	2	982515-60040	AMMETER		1						
6E	2	982515-60120	AMMETER		1						
6F	2	982515-60120	AMMETER		1						
6G	2	982515-60070	AMMETER		1						
6H	2	982515-60070	AMMETER		1						
6I	2	982515-60060	AMMETER		1						
6J	2	982515-60050	AMMETER		1						
6K	2	982515-60050	AMMETER		1						
6L	2	982515-60040	AMMETER		1						
6M	2	982515-60130	AMMETER		1						
6N	2	982515-60130	AMMETER		1						
6O	2	982515-60120	AMMETER		1						
7A	2	982515-60080	AMMETER			1					
7B	2	982515-60060	AMMETER			1					
7C	2	982515-60060	AMMETER			1					
7D	2	982515-60050	AMMETER			1					
7E	2	982515-60140	AMMETER			1					
7F	2	982515-60130	AMMETER			1					
7G	2	982515-60060	AMMETER			1					
7H	2	982515-60140	AMMETER			1					
7I	2	982515-60140	AMMETER			1					
7J	2	982515-60140	AMMETER			1					

N:Old ←Yes/No→ New. Q:Old ←No/Yes→ New. R:Old ←Yes/Yes→ New. S:Old ←No/No→ New. W:Add. Z:Discontinued. F:Interchangeable by set. K:Q'ty Change

++ CONTINUE ++

Copyright (C) YANMAR GLOBAL CS CO., LTD. All RightsReserved.

Fig.83. INSTRUMENT PANEL(NEW)

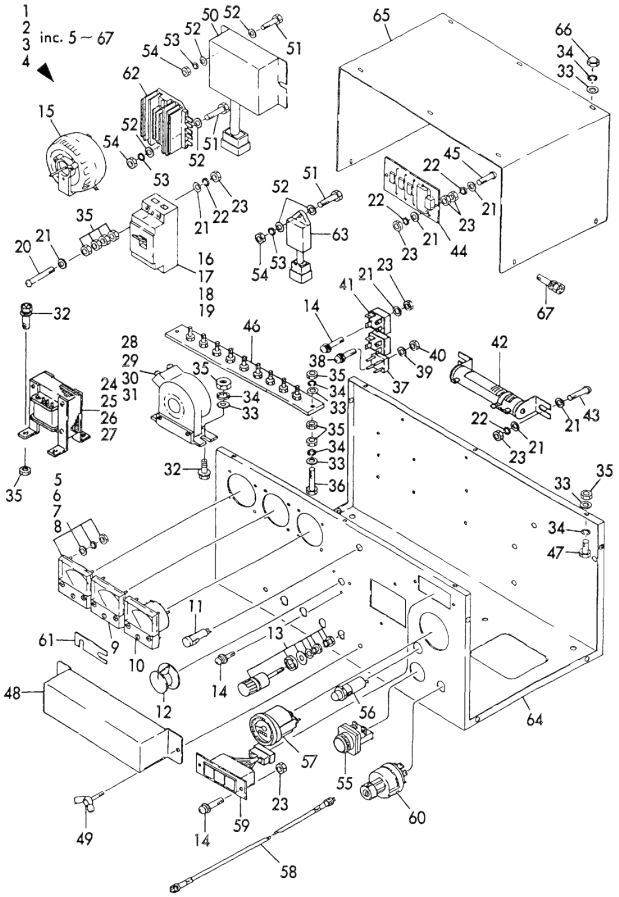

(A)=YEG-8HS
(B)=YEG-10HS
(C)=YEG-20HS
(D)=YEG-24HS
(E)=
(F)=

No.	Lev.	Parts No.	Description	Q'ty (A)	(B)	(C)	(D)	(E)	(F)	I	R
8A	2	982515-60090	AMMETER(50/60HZ/100V				1				
8B	2	982515-60090	AMMETER(50/60HZ/100V				1				
8C	2	982515-60090	AMMETER(50/60HZ/100V				1				
8D	2	982515-60090	AMMETER(50/60HZ/100V				1				
8E	2	982515-60070	AMMETER				1				
8F	2	982515-60070	AMMETER				1				
8G	2	982515-60060	AMMETER				1				
8H	2	982515-60060	AMMETER				1				
8I	2	982515-60150	AMMETER(60HZ110/220V				1				
8J	2	982515-60140	AMMETER				1				
8K	2	982515-60070	AMMETER				1				
8L	2	982515-60070	AMMETER				1				
8M	2	982515-60070	AMMETER				1				
8N	2	982515-60150	AMMETER(60HZ110/220V				1				
8O	2	982515-60150	AMMETER(60HZ110/220V				1				
8P	2	982515-60150	AMMETER(60HZ110/220V				1				
9A	2	982510-50010	VOLTMETER	1	1	1	1				
9B	2	982510-50010	VOLTMETER	1	1	1	1				
9C	2	982510-50010	VOLTMETER	1	1	1	1				
9D	2	982510-50010	VOLTMETER	1	1	1	1				
9E	2	982510-50040	VOLTMETER (200V)	1	1	1	1				
9F	2	982510-50040	VOLTMETER (200V)	1	1	1	1				
9G	2	982510-50040	VOLTMETER (200V)	1	1	1	1				
9H	2	982510-50040	VOLTMETER (200V)	1	1	1	1				
9I	2	982510-50080	VOLTMETER	1	1	1	1				
10A	2	982510-80220	METER, FREQUENCY	1	1	1	1				
10B	2	982510-80220	METER, FREQUENCY	1	1	1	1				
10C	2	982510-80220	METER, FREQUENCY	1	1	1	1				
10D	2	982510-80220	METER, FREQUENCY	1	1	1	1				
10E	2	982510-80056	METER, FREQUENCY	1	1	1	1				
10F	2	982510-80056	METER, FREQUENCY	1	1	1	1				
10G	2	982510-80056	METER, FREQUENCY	1	1	1	1				
10H	2	982510-80056	METER, FREQUENCY	1	1	1	1				
10I	2	982510-80220	METER, FREQUENCY	1	1	1	1				
11A	2	982511-60010	LAMP	1	1	1	1				
11B	2	982511-60010	LAMP	1	1	1	1				
11C	2	982511-60010	LAMP	1	1	1	1				
11D	2	982511-60010	LAMP	1	1	1	1				
11E	2	982511-60020	LAMP	1	1	1	1				
11F	2	982511-60020	LAMP	1	1	1	1				
11G	2	982511-60020	LAMP	1	1	1	1				
11H	2	982511-60020	LAMP	1	1	1	1				
11I	2	982511-60010	LAMP	1	1	1	1				
12	2	982511-90020	KNOB	1	1	1	1				
13A	2	982513-80130	TERMINAL	2	2						
13B	2	982513-80130	TERMINAL	2	2						
13C	2	982513-80130	TERMINAL	2	2						
13D	2	982513-80130	TERMINAL	2	2						
13E	2	982513-80040	TERMINAL	2	2						
13F	2	982513-80040	TERMINAL	2	2						
13G	2	982513-80040	TERMINAL	2	2						

N:Old ←Yes/No→ New. Q:Old ←No/Yes→ New. R:Old ←Yes/Yes→ New. S:Old ←No/No→ New. W:Add. Z:Discontinued. F:Interchangeable by set. K:Q'ty Change

++ CONTINUE ++

Copyright (C) YANMAR GLOBAL CS CO., LTD. All RightsReserved.

Fig.83. INSTRUMENT PANEL(NEW)

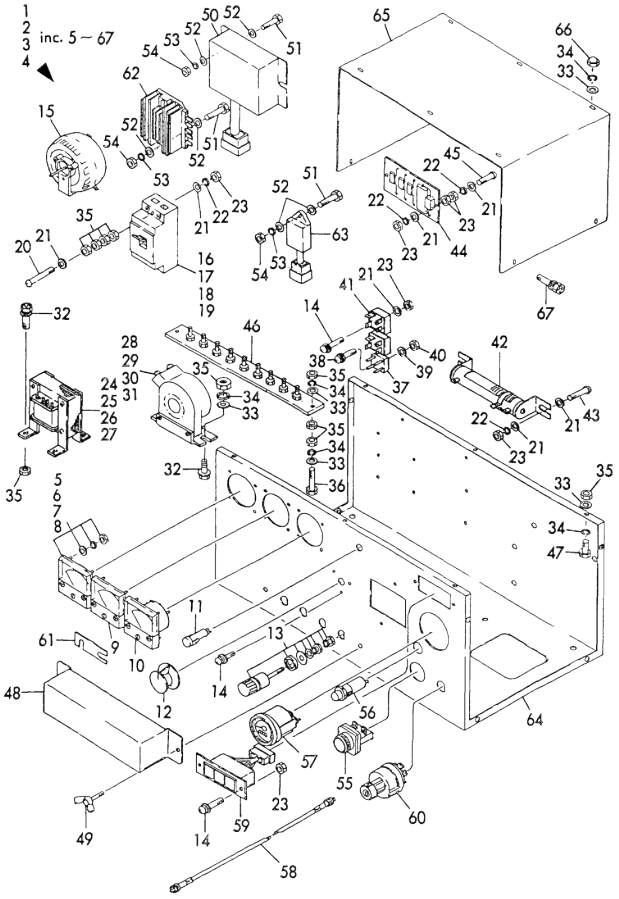

(A)=YEG-8HS
(B)=YEG-10HS
(C)=YEG-20HS
(D)=YEG-24HS
(E)=
(F)=

No.	Lev.	Parts No.	Description	Q'ty (A)	(B)	(C)	(D)	(E)	(F)	I	R
13H	2	982513-80040	TERMINAL	2	2						
13I	2	982513-80040	TERMINAL	4	4						
13J	2	982513-80090	TERMINAL			2	2				
13K	2	982513-80090	TERMINAL			2	2				
13L	2	982513-80090	TERMINAL			2	2				
13M	2	982513-80090	TERMINAL			2	2				
13N	2	982513-80130	TERMINAL			2	2				
13O	2	982513-80130	TERMINAL			2	2				
13P	2	982513-80130	TERMINAL			2	2				
13Q	2	982513-80130	TERMINAL			2	2				
13R	2	982513-80130	TERMINAL			4	4				
14	2	982343-04015	SCREW M 4X15	7	7	7	7				
15	2	982511-00020	REGULATOR, VOLTAGE	1	1	1	1				
16A	2	982512-40511	SWITCH	1							
16B	2	982512-40521	SWITCH, MAIN 50A	1							
16C	2	982512-40521	SWITCH, MAIN 50A	1							
16D	2	982512-40521	SWITCH, MAIN 50A	1							
16E	2	982512-40511	SWITCH	1							
16F	2	982512-40511	SWITCH	1							
16G	2	982512-40511	SWITCH	1							
16H	2	982512-40511	SWITCH	1							
16I	2	982512-40511	SWITCH	1							
16J	2	982512-40511	SWITCH	1							
17A	2	982512-40531	SWITCH		1						
17B	2	982512-40521	SWITCH, MAIN 50A		1						
17C	2	982512-40521	SWITCH, MAIN 50A		1						
17D	2	982512-40531	SWITCH		1						
17E	2	982512-40531	SWITCH		1						
17F	2	982512-40531	SWITCH		1						
17G	2	982512-40531	SWITCH		1						
17H	2	982512-40531	SWITCH		1						
17I	2	982512-40531	SWITCH		1						
17J	2	982512-40521	SWITCH, MAIN 50A		1						
17K	2	982512-40521	SWITCH, MAIN 50A		1						
17L	2	982512-40521	SWITCH, MAIN 50A		1						
18A	2	982512-40751	SWITCH, 50HZ/100V			1					
18B	2	982512-40751	SWITCH, 50HZ/100V			1					
18C	2	982512-40751	SWITCH, 50HZ/100V			1					
18D	2	982512-40751	SWITCH, 50HZ/100V			1					
18E	2	982512-40751	SWITCH, 50HZ/100V			1					
18F	2	982512-40741	SWITCH, 50HZ/230V			1					
18G	2	982512-40741	SWITCH, 50HZ/230V			1					
18H	2	982512-40741	SWITCH, 50HZ/230V			1					
18I	2	982512-40751	SWITCH, 50HZ/100V			1					
19A	2	982512-40761	M,SWITCH(60HZ/ALL)				1				
19B	2	982512-40761	M,SWITCH(60HZ/ALL)				1				
19C	2	982512-40761	M,SWITCH(60HZ/ALL)				1				
19D	2	982512-40761	M,SWITCH(60HZ/ALL)				1				
19E	2	982512-40761	M,SWITCH(60HZ/ALL)				1				
19F	2	982512-40751	SWITCH, 50HZ/100V				1				
19G	2	982512-40751	SWITCH, 50HZ/100V				1				

N:Old ←Yes/No→ New. Q:Old ←No/Yes→ New. R:Old ←Yes/Yes→ New. S:Old ←No/No→ New. W:Add. Z:Discontinued. F:Interchangeable by set. K:Q'ty Change

++ CONTINUE ++

Copyright (C) YANMAR GLOBAL CS CO., LTD. All RightsReserved.

Fig.83. INSTRUMENT PANEL(NEW)

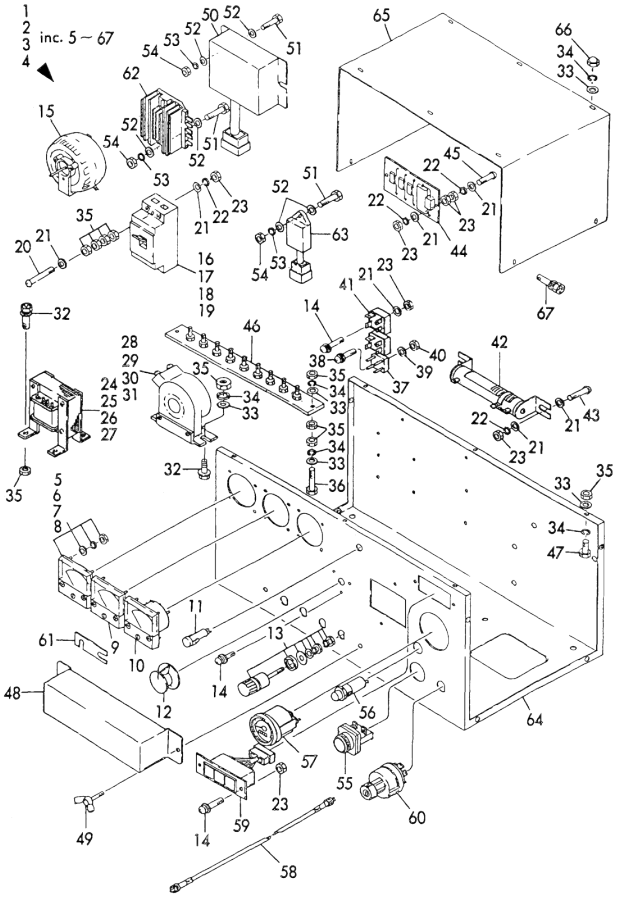

(A)=YEG-8HS
(B)=YEG-10HS
(C)=YEG-20HS
(D)=YEG-24HS
(E)=
(F)=

No.	Lev.	Parts No.	Description	Q'ty (A)	(B)	(C)	(D)	(E)	(F)	I	R
19H	2	982512-40751	SWITCH, 50HZ/100V				1				
19I	2	982512-40761	M,SWITCH(60HZ/ALL)				1				
20	2	982330-00480	SCREW	2	2	2	2				
21	2	22117-040000	WASHER, 4	14	14	18	18				
22	2	22217-040000	WASHER, SPRING 4	12	12	16	16				
23	2	26716-040002	NUT, M4	10	10	12	12				
24A	2	982515-90010	CUR,TRANS(50HZ/100V)	1							
24B	2	982515-90020	CUR,TRANS(50HZ/110V)	1							
24C	2	982515-90030	CUR,TRANS(50HZ/200V)	1							
24D	2	982515-90040	CUR,TRANS(50HZ/220V)	1							
24E	2	982515-90050	CUR,TRANS(50HZ/230V)	1							
24F	2	982515-90060	CUR,TRANS(50HZ/240V)	1							
24G	2	982515-90070	CUR,TRANS(50HZ110/22	1							
24H	2	982515-90080	CUR,TRANS(50HZ115/23	1							
24I	2	982515-90090	CUR,TRANS(60HZ/110V)	1							
24J	2	982515-90100	CUR,TRANS(60HZ/115V)	1							
24K	2	982515-90110	CUR,TRANS(60HZ/120V)	1							
24L	2	982515-90120	CUR,TRANS(60HZ/220V)	1							
24M	2	982515-90130	CUR,TRANS(60HZ/230V)	1							
24N	2	982515-90140	CUR,TRANS(60HZ/240V)	1							
24O	2	982515-90150	CUR,TRANS(60HZ110/22	1							
24P	2	982515-90160	CUR,TRANS(60HZ115/23	1							
24Q	2	982515-90170	CUR,TRANS(60HZ120/24	1							
25A	2	982515-90180	CUR,TRANS(50HZ/100V)		1						
25B	2	982515-90190	CUR,TRANS(50HZ/110V)		1						
25C	2	982515-90200	CUR,TRANS(50HZ/200V)		1						
25D	2	982515-90210	CUR,TRANS(50HZ/220V)		1						
25E	2	982515-90220	CUR,TRANS(50HZ/230V)		1						
25F	2	982515-90230	CUR,TRANS(50HZ/240V)		1						
25G	2	982515-90240	CUR,TRANS(50HZ110/22		1						
25H	2	982515-90250	CUR,TRANS(50HZ115/23		1						
25I	2	982515-90260	CUR,TRANS(60HZ/110V)		1						
25J	2	982515-90270	CUR,TRANS(60HZ/115V)		1						
25K	2	982515-90280	CUR,TRANS(60HZ/120V)		1						
25L	2	982515-90290	CUR,TRANS(60HZ/220V)		1						
25M	2	982515-90300	CUR,TRANS(60HZ/230V)		1						
25N	2	982515-90310	CUR,TRANS(60HZ/240V)		1						
25O	2	982515-90320	CUR,TRANS(60HZ110/22		1						
25P	2	982515-90330	CUR,TRANS(60HZ115/23		1						
25Q	2	982515-90340	CUR,TRANS(60HZ120/24		1						
26A	2	982515-90350	CUR,TRANS(50HZ/100V)			1					
26B	2	982515-90360	CUR,TRANS(50HZ/110V)			1					
26C	2	982515-90370	CUR,TRANS(50HZ/200V)			1					
26D	2	982515-90380	CUR,TRANS(50HZ/220V)			1					
26E	2	982515-90390	CUR,TRANS(50HZ/230V)			1					
26F	2	982515-90400	CUR,TRANS(50HZ/240V)			1					
26G	2	982515-90410	CUR,TRANS(50HZ110/22			1					
26H	2	982515-90420	CUR,TRANS(50HZ115/23			1					
26I	2	982515-90430	CUR,TRANS(60HZ/110V)			1					
26J	2	982515-90440	CUR,TRANS(60HZ/115V)			1					
26K	2	982515-90450	CUR,TRANS(60HZ/120V)			1					

N:Old ←Yes/No→ New. Q:Old ←No/Yes→ New. R:Old ←Yes/Yes→ New. S:Old ←No/No→ New. W:Add. Z:Discontinued. F:Interchangeable by set. K:Q'ty Change

++ CONTINUE ++

Copyright (C) YANMAR GLOBAL CS CO., LTD. All RightsReserved.

Fig.83. INSTRUMENT PANEL(NEW)

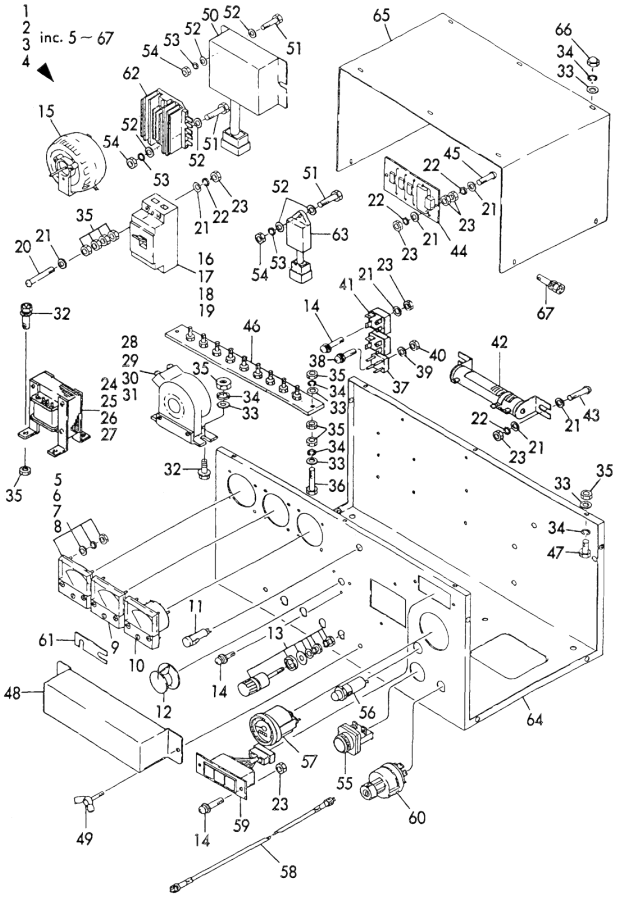

(A)=YEG-8HS
(B)=YEG-10HS
(C)=YEG-20HS
(D)=YEG-24HS
(E)=
(F)=

No.	Lev.	Parts No.	Description	Q'ty (A)	(B)	(C)	(D)	(E)	(F)	I	R
26L	2	982515-90460	CUR,TRANS(60HZ/220V)			1					
26M	2	982515-90470	CUR,TRANS(60HZ/230V)			1					
26N	2	982515-90480	CUR,TRANS(60HZ/240V)			1					
26O	2	982515-90490	CUR,TRANS(60HZ110/22			1					
26P	2	982515-90500	CUR,TRANS(60HZ115/23			1					
26Q	2	982515-90510	CUR,TRANS(60HZ120/24			1					
27A	2	982515-90520	CUR,TRANS(50HZ/100V)				1				
27B	2	982515-90530	CUR,TRANS(50HZ/110V)				1				
27C	2	982515-90540	CUR,TRANS(50HZ/200V)				1				
27D	2	982515-90550	CUR,TRANS(50HZ/220V)				1				
27E	2	982515-90560	CUR,TRANS(50HZ/230V)				1				
27F	2	982515-90570	CUR,TRANS(50HZ/240V)				1				
27G	2	982515-90580	CUR,TRANS(50HZ110/22				1				
27H	2	982515-90590	CUR,TRANS(50HZ115/23				1				
27I	2	982515-90600	CUR,TRANS(60HZ/110V)				1				
27J	2	982515-90610	CUR,TRANS(60HZ/115V)				1				
27K	2	982515-90620	CUR,TRANS(60HZ/120V)				1				
27L	2	982515-90630	CUR,TRANS(60HZ/220V)				1				
27M	2	982515-90640	CUR,TRANS(60HZ/230V)				1				
27N	2	982515-90650	CUR,TRANS(60HZ/240V)				1				
27O	2	982515-90660	CUR,TRANS(60HZ110/22				1				
27P	2	982515-90670	CUR,TRANS(60HZ115/23				1				
27Q	2	982515-90680	CUR,TRANS(60HZ120/24				1				
28A	2	982513-90070	TRANSFORMER	1							
28B	2	982513-90080	TRANSFORMER	1							
28C	2	982513-90070	TRANSFORMER	1							
28D	2	982513-90070	TRANSFORMER	1							
28E	2	982513-90070	TRANSFORMER	1							
28F	2	982513-90070	TRANSFORMER	1							
28G	2	982513-90070	TRANSFORMER	1							
28H	2	982513-90070	TRANSFORMER	1							
28I	2	982513-90080	TRANSFORMER	1							
29A	2	982513-90080	TRANSFORMER		1						
29B	2	982513-90080	TRANSFORMER		1						
29C	2	982513-90070	TRANSFORMER		1						
29D	2	982513-90070	TRANSFORMER		1						
29E	2	982513-90070	TRANSFORMER		1						
29F	2	982513-90070	TRANSFORMER		1						
29G	2	982513-90070	TRANSFORMER		1						
29H	2	982513-90070	TRANSFORMER		1						
29I	2	982513-90080	TRANSFORMER		1						
29J	2	982513-90080	TRANSFORMER		1						
29K	2	982513-90080	TRANSFORMER		1						
29L	2	982513-90080	TRANSFORMER		1						
29M	2	982513-90070	TRANSFORMER		1						
29N	2	982513-90070	TRANSFORMER		1						
29O	2	982513-90080	TRANSFORMER		1						
29P	2	982513-90080	TRANSFORMER		1						
29Q	2	982513-90070	TRANSFORMER		1						
30A	2	982513-90150	TRANSFORMER			1					
30B	2	982513-90150	TRANSFORMER			1					

N:Old ←Yes/No→ New. Q:Old ←No/Yes→ New. R:Old ←Yes/Yes→ New. S:Old ←No/No→ New. W:Add. Z:Discontinued. F:Interchangeable by set. K:Q'ty Change

++ CONTINUE ++

Copyright (C) YANMAR GLOBAL CS CO., LTD. All RightsReserved.

Fig.83. INSTRUMENT PANEL(NEW)

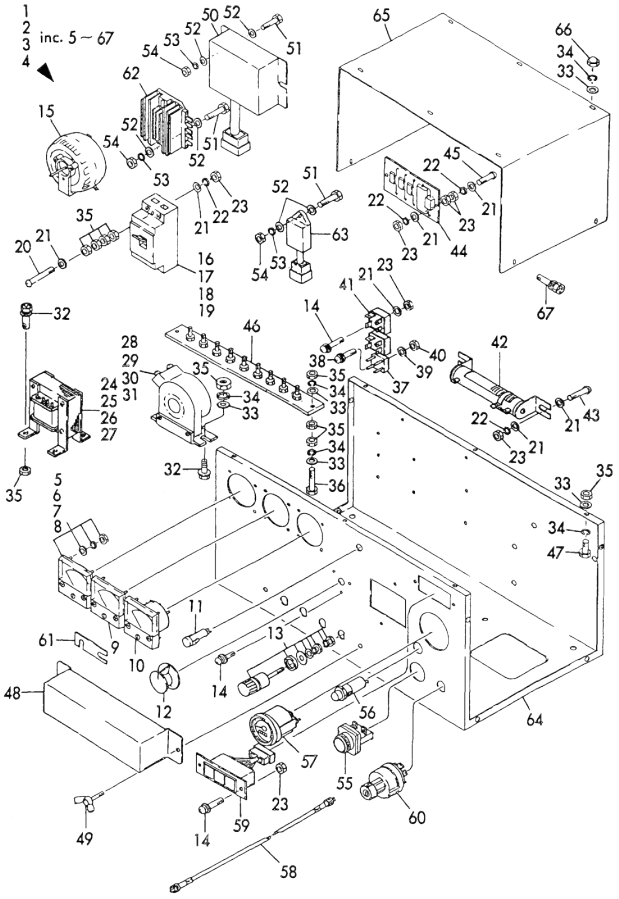

(A)=YEG-8HS
(B)=YEG-10HS
(C)=YEG-20HS
(D)=YEG-24HS
(E)=
(F)=

No.	Lev.	Parts No.	Description	Q'ty (A)	(B)	(C)	(D)	(E)	(F)	I	R
30C	2	982513-90150	TRANSFORMER			1					
30D	2	982513-90150	TRANSFORMER			1					
30E	2	982513-90070	TRANSFORMER			1					
30F	2	982513-90070	TRANSFORMER			1					
30G	2	982513-90080	TRANSFORMER			1					
30H	2	982513-90080	TRANSFORMER			1					
30I	2	982513-90070	TRANSFORMER			1					
30J	2	982513-90080	TRANSFORMER			1					
30K	2	982513-90070	TRANSFORMER			1					
30L	2	982513-90070	TRANSFORMER			1					
30M	2	982513-90070	TRANSFORMER			1					
30N	2	982513-90070	TRANSFORMER			1					
30O	2	982513-90070	TRANSFORMER			1					
30P	2	982513-90070	TRANSFORMER			1					
31A	2	982513-90160	TRANSMITTER, 200-220				1				
31B	2	982513-90160	TRANSMITTER, 200-220				1				
31C	2	982513-90160	TRANSMITTER, 200-220				1				
31D	2	982513-90160	TRANSMITTER, 200-220				1				
31E	2	982513-90080	TRANSFORMER				1				
31F	2	982513-90080	TRANSFORMER				1				
31G	2	982513-90070	TRANSFORMER				1				
31H	2	982513-90070	TRANSFORMER				1				
31I	2	982513-90080	TRANSFORMER				1				
31J	2	982513-90070	TRANSFORMER				1				
31K	2	982513-90080	TRANSFORMER				1				
31L	2	982513-90080	TRANSFORMER				1				
31M	2	982513-90080	TRANSFORMER				1				
31N	2	982513-90080	TRANSFORMER				1				
31O	2	982513-90080	TRANSFORMER				1				
31P	2	982513-90080	TRANSFORMER				1				
32	2	982343-05014	BOLT, M5X14	6	6	6	6				
33	2	22117-050000	WASHER, 5	26	26	26	26				
34	2	22217-050000	WASHER, SPRING 5	22	22	22	22				
35	2	26716-050002	NUT, M5	24	24	24	24				
36	2	26116-050502	BOLT, M5X 50 PLATED	2	2	2	2				
37	2	982513-10060	RECTIFIER	1	1	1	1				
38	2	982343-03015	SCREW, M3X15	1	1	1	1				
39	2	982030-10300	WASHER 3	1	1	1	1				
40	2	982023-10300	NUT M3	1	1	1	1				
41	2	982513-10050	RECTIFIER	1	1	1	1				
42	2	982511-10040	RESISTOR 60W-10	1	1	1	1				
43	2	26557-040122	SCREW, M4X12	2	2	2	2				
44	2	982513-70150	SURGE ABSORBER	1	1	1	1				
45	2	26557-040122	SCREW, M4X12	2	2	2	2				
46A	2	982511-50560	TAP,TERMINAL(SINGLEV	1	1	1	1				
46B	2	982511-50570	TAP,TERMINAL(DUAL V)	1	1	1	1				
47	2	26116-050152	BOLT M 5X 15 PLATED	6	6	6	6				
48A	2	982518-60240	GUARD	1	1						
48B	2	982518-60270	TERMINAL GUARD			1	1				
49	2	982317-00070	BOLT	2	2	2	2				
50	2	982514-00040	RELAY	1	1	1	1				

N:Old ←Yes/No→ New. Q:Old ←No/Yes→ New. R:Old ←Yes/Yes→ New. S:Old ←No/No→ New. W:Add. Z:Discontinued. F:Interchangeable by set. K:Q'ty Change

++ CONTINUE ++

Copyright (C) YANMAR GLOBAL CS CO., LTD. All RightsReserved.

Fig.83. INSTRUMENT PANEL(NEW)

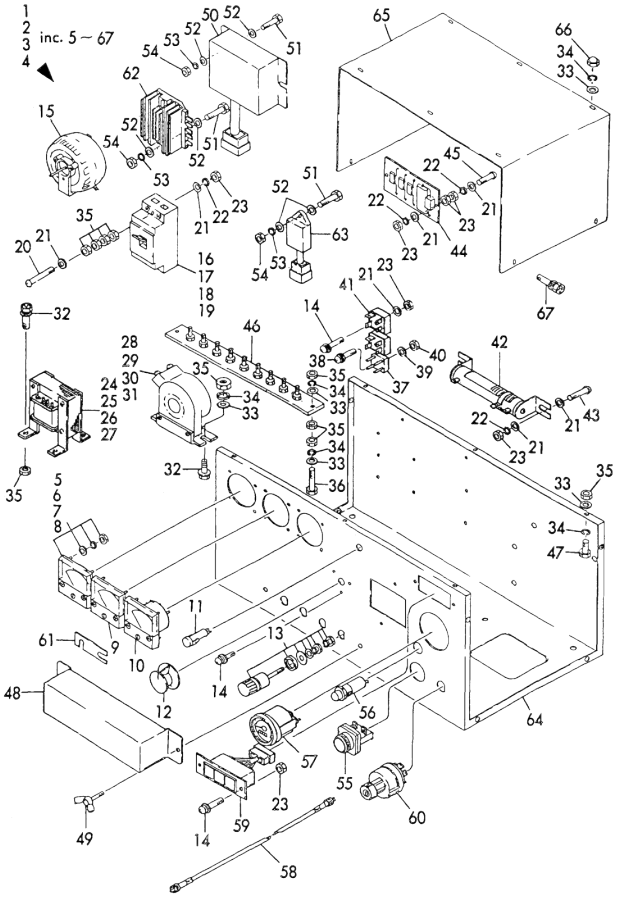

(A)=YEG-8HS
(B)=YEG-10HS
(C)=YEG-20HS
(D)=YEG-24HS
(E)=
(F)=

No.	Lev.	Parts No.	Description	Q'ty (A)	(B)	(C)	(D)	(E)	(F)	I	R
51	2	26116-060252	BOLT, M6X 25 PLATED	5	5	5	5				
52	2	22117-060000	WASHER, 6	10	10	10	10				
53	2	22217-060000	WASHER, SPRING 6	5	5	5	5				
54	2	26756-060002	NUT, LOCK M6	7	7	7	7				
55	2	982517-70100	SWITCH	1	1	1	1				
56	2	124559-99791	LAMP, PILOT	1	1	1	1				
57	2	171080-91100	TACHOMETER	1	1	1	1				
58A	2	194145-56901	CABLE ASSY, METER	1	1	1					
58B	2	42130-502220	CABLE, TACHOMETER				1				
59	2	170038-91310	LAMP	1	1	1	1				
60	2	171400-91251	SWITCH, STARTER	1	1	1	1				
61A	2	982513-80410	CONNECTOR	2	2						
61B	2	982513-80420	CONNECTOR			2	2				
62	2	119660-77710	LIMITER, CURRENT 15A	1	1	1	1				
63	2	124559-77971	LAMP, PILOT	1	1	1	1				
64A	2	982515-70841	PANEL.B 5.60HZSINGLE	1							
64B	2	982515-70851	PANEL.B 5.60HZDUAL V	1							
64C	2	982515-70861	PANEL, B 50HZ/100V		1						
64D	2	982515-70871	PANEL,B 50HZ110-240V		1						
64E	2	982515-70881	PANEL, B 50HZ/DUAL V		1						
64F	2	982515-70891	PANEL, B 60HZ/110V		1						
64G	2	982515-70891	PANEL, B 60HZ/110V		1						
64H	2	982515-70901	PANEL, B 60HZ/220V		1						
64I	2	982515-70901	PANEL, B 60HZ/220V		1						
64J	2	982515-70911	PANEL, B 60HZ/120V		1						
64K	2	982515-70911	PANEL, B 60HZ/120V		1						
64L	2	982515-70921	PANEL,B 60HZ110/220V		1						
64M	2	982515-70921	PANEL,B 60HZ110/220V		1						
64N	2	982515-70931	PANEL, B 60HZ/120V		1						
64O	2	982515-70931	PANEL, B 60HZ/120V		1						
64P	2	982515-70941	PANEL.B 5.60HZ100-12			1					
64Q	2	982515-70951	PANEL.B 5.60HZ200-24			1					
64R	2	982515-70961	PANEL.B 5.60HZDUAL V			1					
64S	2	982515-70971	PANEL.B 5.60HZ100-12				1				
64T	2	982515-70981	PANEL,B 50HZ/200-220				1				
64U	2	982515-70991	PANEL,B 50HZ/230-240				1				
64V	2	982515-71001	PANEL,B 50HZ/110/220				1				
64W	2	982515-71011	PANEL,B 50HZ/115/230				1				
64X	2	982515-71021	PANEL,B 60HZ/200-240				1				
64Y	2	982515-71031	PANEL, B 60HZ/DUAL V				1				
65	2	982515-80320	COVER, PANEL	1	1	1	1				
66	2	982036-05002	CAP NUT M 5	6	6	6	6				
67	2	982343-05014	BOLT, M5X14	4	4	4	4				

N:Old $\frac{\text{Yes}}{\text{No}}$ New. Q:Old $\frac{\text{No}}{\text{Yes}}$ New. R:Old $\frac{\text{Yes}}{\text{Yes}}$ New. S:Old $\frac{\text{No}}{\text{No}}$ New. W:Add. Z:Discontinued. F:Interchangeable by set. K:Q'ty Change

Copyright (C) YANMAR GLOBAL CS CO., LTD. All RightsReserved.

Fig.84. GENERATOR

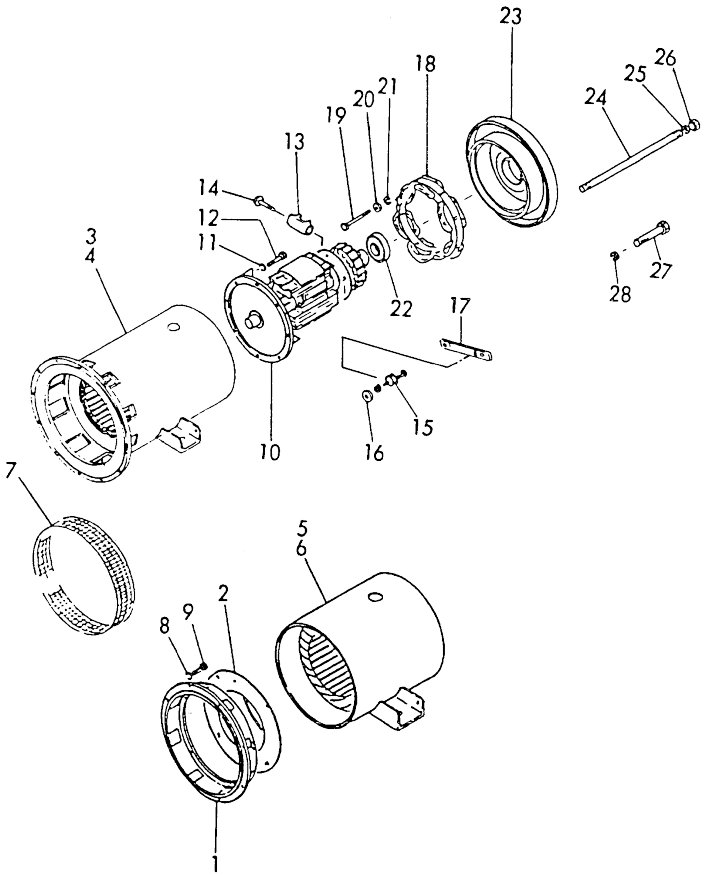

(A)=YEG12H-BS (D)=YEG35H-BS
(B)=YEG15H-BS (E)=
(C)=YEG25H-BS (F)=

No.	Lev.	Parts No.	Description	Q'ty (A)	(B)	(C)	(D)	(E)	(F)	I	R
1	1	982112-00120	HOUSING	1	1	1	1				
2	1	982112-20150	GUIDE, AIR	1	1	1	1				
3A	1	982174-80555	STATOR, 50HZ/200V	1							
3B	1	982174-80565	STATOR, 50HZ/220V	1							
3C	1	982174-80575	STATOR, 50HZ/380V	1							
3D	1	982174-80585	STATOR, 50HZ/400V	1							
3E	1	982174-80595	STATOR, 50HZ/415V	1							
3F	1	982174-80605	STATOR, 60HZ/220V	1							
3G	1	982174-80615	STATOR, 60HZ/380V	1							
3H	1	982174-80625	STATOR, 60HZ/440V	1							
3I	1	982174-80635	STATOR, 60HZ/480V	1							
4A	1	982174-80645	STATOR, 50HZ/200V		1						
4B	1	982174-80655	STATOR, 50HZ/220V		1						
4C	1	982174-80665	STATOR, 50HZ/380V		1						
4D	1	982174-80675	STATOR, 50HZ/400V		1						
4E	1	982174-80685	STATOR, 50HZ/415V		1						
4F	1	982174-80695	STATOR, 60HZ/220V		1						
4G	1	982174-80705	STATOR, 60HZ/380V		1						
4H	1	982174-80715	STATOR, 60HZ/440V		1						
4I	1	982174-80725	STATOR, 60HZ/480V		1						
5A	1	982174-80735	STATOR, 50HZ/200V			1					
5B	1	982174-80745	STATOR, 50HZ/220V			1					
5C	1	982174-80755	STATOR, 50HZ/380V			1					
5D	1	982174-80765	STATOR, 50HZ/400V			1					
5E	1	982174-80775	STATOR, 50HZ/415V			1					
5F	1	982174-80785	STATOR, 60HZ/220V			1					
5G	1	982174-80795	STATOR, 60HZ/380V			1					
5H	1	982174-80805	STATOR, 60HZ/440V			1					
5I	1	982174-80815	STATOR, 60HZ/480V			1					
6A	1	982174-80825	STATOR, 50HZ/200V				1				
6B	1	982174-80835	STATOR, 50HZ/220V				1				
6C	1	982174-80845	STATOR, 50HZ/380V				1				
6D	1	982174-80855	STATOR, 50HZ/400V				1				
6E	1	982174-80865	STATOR, 50HZ/415V				1				
6F	1	982174-80875	STATOR, 60HZ/220V				1				
6G	1	982174-80885	STATOR, 60HZ/380V				1				
6H	1	982174-80895	STATOR, 60HZ/440V				1				
6I	1	982174-80905	STATOR, 60HZ/480V				1				
7A	1	982190-00010	GUARD	1	1						
7B	1	982190-00020	GUARD			1	1				
8	1	22217-100000	WASHER, SPRING 10	8	8	8	8				
9	1	26116-102502	BOLT, M10X250 PLATED	8	8	8	8				
10A	1	982116-90250	ROTOR SET	1							
10B	1	982116-90260	ROTER SET		1						
10C	1	982116-90270	ROTER SET			1					
10D	1	982116-90280	ROTER SET				1				
11	1	22217-080000	WASHER, SPRING 8	8	8	8	8				
12	1	982314-50835	BOLT, M8X35	8	8	8	8				
13	1	982117-10011	RESISTOR	1	1	1	1				
14	1	26557-040402	SCREW, M4X40	1	1	1	1				
15A	1	982512-10040	SILICON	4	4	4					

N:Old ←Yes/No→ New. Q:Old ←No/Yes→ New. R:Old ←Yes/Yes→ New. S:Old ←No/No→ New. W:Add. Z:Discontinued. F:Interchangeable by set. K:Q'ty Change

++ CONTINUE ++

Copyright (C) YANMAR GLOBAL CS CO., LTD. All RightsReserved.

Fig.84. GENERATOR

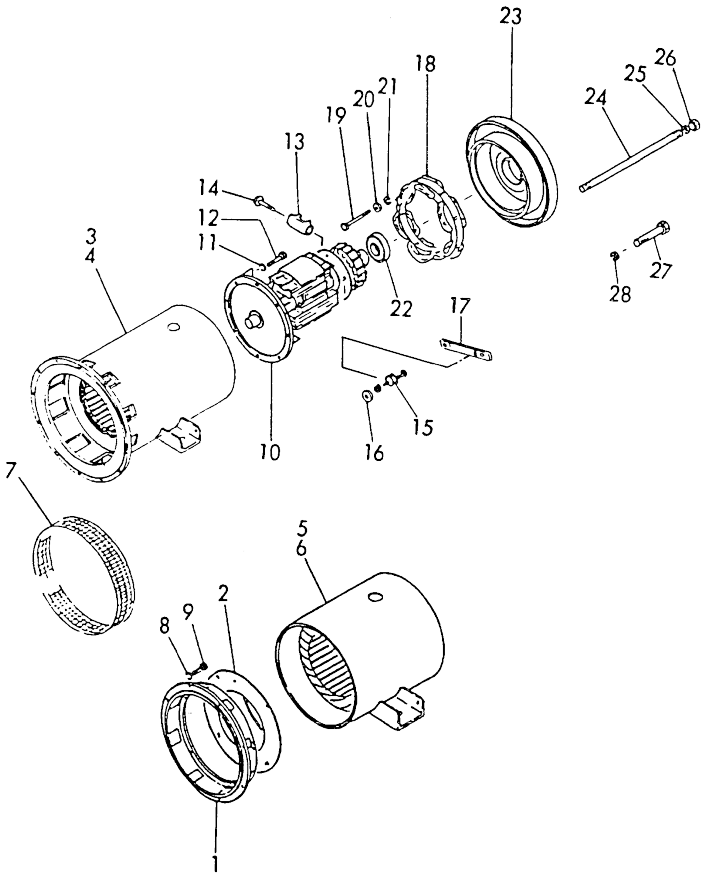

(A)=YEG12H-BS
(B)=YEG15H-BS
(C)=YEG25H-BS
(D)=YEG35H-BS
(E)=
(F)=

No.	Lev.	Parts No.	Description	Q'ty (A)	(B)	(C)	(D)	(E)	(F)	I	R
15B	1	982512-10050	SILICON	3	3	3					
15C	1	982512-10120	RECTIFIER				4				
15D	1	982512-10130	RECTIFIER				3				
16	1	982117-40010	WASHER	16	16	16	16				
17A	1	982111-90010	CONNECTOR	6	6						
17B	1	982111-90020	CONNECTOR			6	6				
18A	1	982110-90140	COIL, EXITER	1	1						
18B	1	982110-90090	COIL, FIELD			1					
18C	1	982110-90100	COIL, FIELD				1				
19A	1	26116-060402	BOLT, M6X 40 PLATED	6	6	6					
19B	1	26116-060502	BOLT, M6X 50 PLATED				6				
20	1	22217-060000	WASHER, SPRING 6	6	6	6	6				
21	1	22117-060000	WASHER, 6	6	6	6	6				
22	1	24107-063074	BEARING, BALL 6307ZZ	1	1	1	1				
23A	1	982110-20350	BRACKET	1	1						
23B	1	982110-20300	BRACKET			1	1				
24A	1	982118-10290	BOLT M10X450			4					
24B	1	982118-10100	BOLT, M10X510				4				
25	1	22217-100000	WASHER, SPRING 10			4	4				
26	1	26716-100002	NUT, M10			4	4				
27	1	26116-100602	BOLT, M10X 60 PLATED	4	4						
28	1	22217-100000	WASHER, SPRING 10	4	4						

N:Old ←Yes/No→ New. Q:Old ←No/Yes→ New. R:Old ←Yes/Yes→ New. S:Old ←No/No→ New. W:Add. Z:Discontinued. F:Interchangeable by set. K:Q'ty Change

Copyright (C) YANMAR GLOBAL CS CO., LTD. All RightsReserved.

Fig.85. INSTRUMENT PANEL

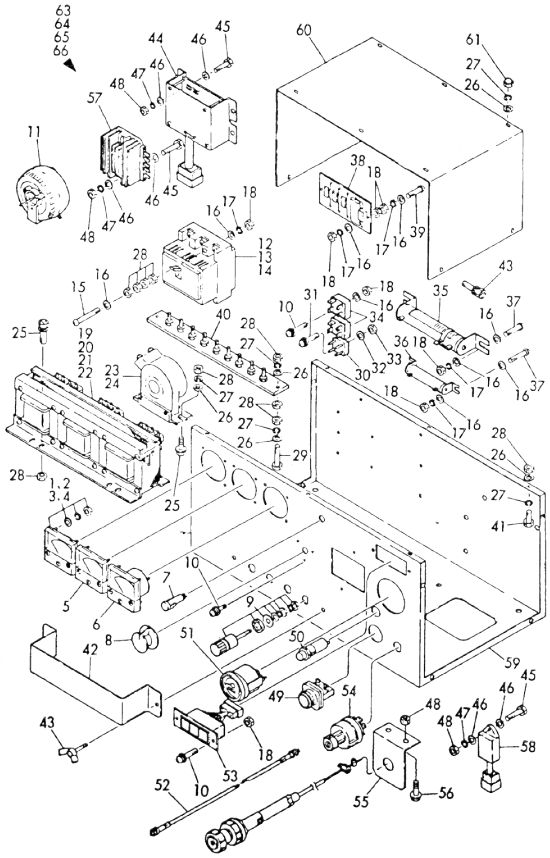

Remarks
(1) INCLUDE REF.NO.1-62 PARTS.

(A)=YEG12H-BS (D)=YEG35H-BS
(B)=YEG15H-BS (E)=
(C)=YEG25H-BS (F)=

No.	Lev.	Parts No.	Description	Q'ty (A)	(B)	(C)	(D)	(E)	(F)	I	R
1A	1	982515-60040	AMMETER	1							
1B	1	982515-60030	AMMETER	1							
1C	1	982515-60020	AMMETER	1							
1D	1	982515-60020	AMMETER	1							
1E	1	982515-60020	AMMETER	1							
1F	1	982515-60040	AMMETER	1							
1G	1	982515-60030	AMMETER	1							
1H	1	982515-60020	AMMETER	1							
1I	1	982515-60020	AMMETER	1							
2A	1	982515-60040	AMMETER		1						
2B	1	982515-60040	AMMETER		1						
2C	1	982515-60030	AMMETER		1						
2D	1	982515-60030	AMMETER		1						
2E	1	982515-60030	AMMETER		1						
2F	1	982515-60040	AMMETER		1						
2G	1	982515-60030	AMMETER		1						
2H	1	982515-60030	AMMETER		1						
2I	1	982515-60020	AMMETER		1						
3A	1	982515-60050	AMMETER			1					
3B	1	982515-60050	AMMETER			1					
3C	1	982515-60040	AMMETER			1					
3D	1	982515-60040	AMMETER			1					
3E	1	982515-60040	AMMETER			1					
3F	1	982515-60050	AMMETER			1					
3G	1	982515-60040	AMMETER			1					
3H	1	982515-60040	AMMETER			1					
3I	1	982515-60040	AMMETER			1					
4A	1	982515-60060	AMMETER				1				
4B	1	982515-60060	AMMETER				1				
4C	1	982515-60050	AMMETER				1				
4D	1	982515-60040	AMMETER				1				
4E	1	982515-60040	AMMETER				1				
4F	1	982515-60060	AMMETER				1				
4G	1	982515-60050	AMMETER				1				
4H	1	982515-60050	AMMETER				1				
4I	1	982515-60040	AMMETER				1				
5A	1	982510-50550	VOLTMETER	1	1	1	1				
5B	1	982510-50540	VOLTMETER	1	1	1	1				
6	1	982510-80056	METER, FREQUENCY	1	1	1	1				
7	1	982511-60020	LAMP	1	1	1	1				
8	1	982511-90020	KNOB	1	1	1	1				
9A	1	982513-80010	TERMINAL	3	3						
9B	1	982513-80020	TERMINAL	1	1						
9C	1	982513-80040	TERMINAL			3					
9D	1	982513-80060	TERMINAL			1					
9E	1	982513-80010	TERMINAL			3					
9F	1	982513-80020	TERMINAL			1					
9G	1	982513-80130	TERMINAL				4				
9H	1	982513-80040	TERMINAL				3				
9I	1	982513-80060	TERMINAL				1				
10	1	982343-04015	SCREW M 4X15	7	7	7	7				

N:Old ←Yes/No→ New. Q:Old ←No/Yes→ New. R:Old ←Yes/Yes→ New. S:Old ←No/No→ New. W:Add. Z:Discontinued. F:Interchangeable by set. K:Q'ty Change

++ CONTINUE ++

Copyright (C) YANMAR GLOBAL CS CO., LTD. All RightsReserved.

Fig.85. INSTRUMENT PANEL

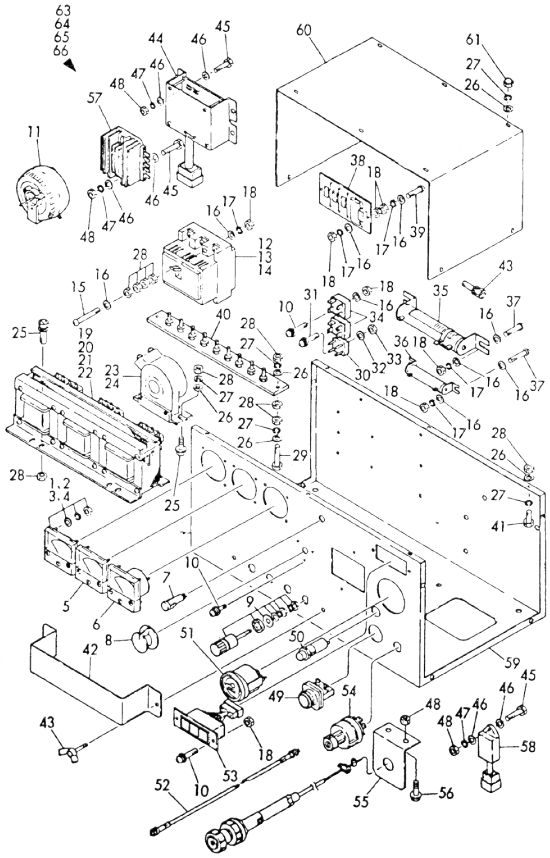

(A)=YEG12H-BS
(B)=YEG15H-BS
(C)=YEG25H-BS
(D)=YEG35H-BS
(E)=
(F)=

No.	Lev.	Parts No.	Description	Q'ty (A)	(B)	(C)	(D)	(E)	(F)	I	R
11	1	982511-00020	REGULATOR, VOLTAGE	1	1	1	1				
12A	1	982512-50081	MAIN SWITCH(200V-32A	1							
12B	1	982512-50061	SWITCH, MAIN 200-220	1							
12C	1	982512-50081	MAIN SWITCH(200V-32A	1							
12D	1	982512-50071	SWITCH, MAIN 220-24A	1							
12E	1	982512-40091	SWITCH, MAIN 16A	1							
13A	1	982512-40261	SWITCH, 50HZ/200V		1						
13B	1	982512-40251	SWITCH, MAIN		1						
13C	1	982512-50071	SWITCH, MAIN 220-24A		1						
13D	1	982512-40251	SWITCH, MAIN		1						
13E	1	982512-50071	SWITCH, MAIN 220-24A		1						
13F	1	982512-40101	SWITCH, MAIN 380V		1						
13G	1	982512-40331	SWITCH, 50HZ/200V			1					
13H	1	982512-40251	SWITCH, MAIN			1					
13I	1	982512-40331	SWITCH, 50HZ/200V			1					
13J	1	982512-40261	SWITCH, 50HZ/200V			1					
13K	1	982512-40251	SWITCH, MAIN			1					
14A	1	982512-40351	SWITCH, MAIN				1				
14B	1	982512-40261	SWITCH, 50HZ/200V				1				
14C	1	982512-40351	SWITCH, MAIN				1				
14D	1	982512-40321	SWITCH, 50HZ/200V				1				
14E	1	982512-40261	SWITCH, 50HZ/200V				1				
15	1	982330-00480	SCREW	2	2	2	2				
16	1	22117-040000	WASHER, 4	14	14	18	18				
17	1	22217-040000	WASHER, SPRING 4	12	12	16	16				
18	1	26716-040002	NUT, M4	10	10	12	12				
19A	1	982511-80110	TRANSFORMER, 50/200	1							
19B	1	982511-80120	CURRENT TRANSFORMER	1							
19C	1	982511-80130	TRANSFORMER, 50/380	1							
19D	1	982511-80140	TRANSFORMER, 50/400	1							
19E	1	982511-80150	TRANSFORMER, 50/415	1							
19F	1	982511-80160	CURRENT TRANSFORMER	1							
19G	1	982511-80170	CURRENT TRANSFORMER	1							
19H	1	982511-80180	TRANSFORMER, 60/440	1							
19I	1	982511-80190	CUR.TRANS.(60HZ/480V	1							
20A	1	982511-80200	TRANSFORMER, 50/200		1						
20B	1	982511-80210	CURRENT TRANSFORMER		1						
20C	1	982511-80220	TRANSFORMER, 50/380		1						
20D	1	982511-80230	TRANSFORMER, 50/400		1						
20E	1	982511-80240	TRANSFORMER, 50/415		1						
20F	1	982511-80250	CUR.TRANS.(60HZ/220V		1						
20G	1	982511-80260	TRANSFORMER, 60/380		1						
20H	1	982511-80270	TRANSFORMER, 60/440		1						
20I	1	982511-80280	TRANSFORMER, 60/480		1						
21A	1	982511-80290	TRANSFORMER, 50/200			1					
21B	1	982511-80300	TRANSFORMER, 50/220			1					
21C	1	982511-80310	CUR.TRANS.(50HZ/380V			1					
21D	1	982511-80320	TRANSFORMER, 50/400			1					
21E	1	982511-80330	TRANSFORMER, 50/415			1					
21F	1	982511-80340	CUR.TRANS.(60HZ/220V			1					
21G	1	982511-80350	CUR.TRANS.(60HZ/380V			1					

Remarks
(1) INCLUDE REF.NO.1-62 PARTS.

N:Old ←Yes/No→ New. Q:Old ←No/Yes→ New. R:Old ←Yes/Yes→ New. S:Old ←No/No→ New. W:Add. Z:Discontinued. F:Interchangeable by set. K:Q'ty Change

++ CONTINUE ++

Copyright (C) YANMAR GLOBAL CS CO., LTD. All RightsReserved.

Fig.85. INSTRUMENT PANEL

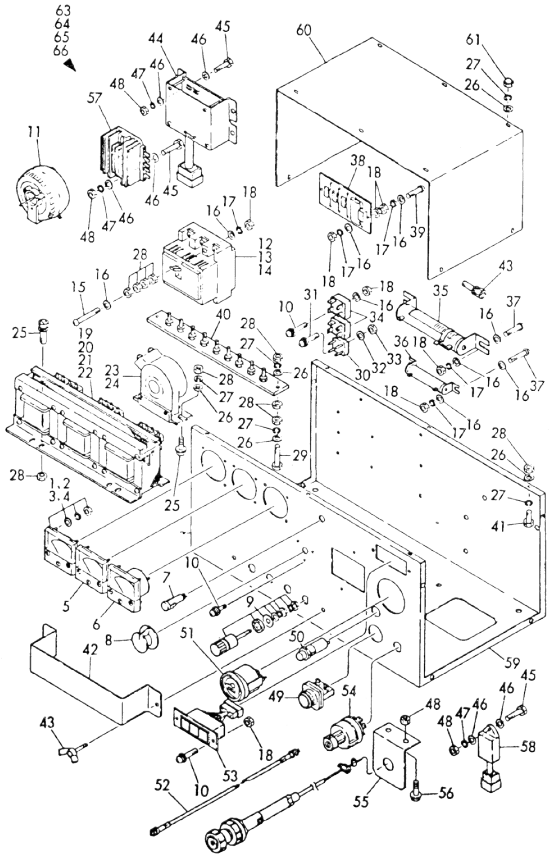

Remarks
(1) INCLUDE REF.NO.1-62 PARTS.

(A)=YEG12H-BS (D)=YEG35H-BS
(B)=YEG15H-BS (E)=
(C)=YEG25H-BS (F)=

No.	Lev.	Parts No.	Description	Q'ty (A)	(B)	(C)	(D)	(E)	(F)	I	R
21H	1	982511-80360	TRANSFORMER, 60/440			1					
21I	1	982511-80370	TRANSFORMER, 60/480			1					
22A	1	982511-80380	TRANSFORMER, 50/200				1				
22B	1	982511-80390	TRANSFORMER, 50/220				1				
22C	1	982511-80400	TRANSFORMER, 50/380				1				
22D	1	982511-80410	TRANSFORMER, 50/400				1				
22E	1	982511-80420	CUR.TRANS.(50HZ/415V				1				
22F	1	982511-80430	TRANSFORMER, 60/220				1				
22G	1	982511-80440	TRANSFORMER, 60/380				1				
22H	1	982511-80450	TRANSFORMER, 60/440				1				
22I	1	982511-80460	TRANSFORMER, 60/480				1				
23A	1	982513-90050	TRANSFORMER	1	1						
23B	1	982513-90050	TRANSFORMER		1						
23C	1	982513-90050	TRANSFORMER	1	1						
24A	1	982513-90060	TRANSFORMER			1					
24B	1	982513-90060	TRANSFORMER			1					
24C	1	982513-90050	TRANSFORMER			1					
24D	1	982513-90050	TRANSFORMER			1	1				
24E	1	982513-90050	TRANSFORMER			1	1				
24F	1	982513-90060	TRANSFORMER			1					
24G	1	982513-90050	TRANSFORMER			1					
24H	1	982513-90050	TRANSFORMER			1					
24I	1	982513-90050	TRANSFORMER			1	1				
24J	1	982513-90070	TRANSFORMER				1				
24K	1	982513-90070	TRANSFORMER				1				
24L	1	982513-90060	TRANSFORMER				1				
24M	1	982513-90070	TRANSFORMER				1				
24N	1	982513-90060	TRANSFORMER				1				
24O	1	982513-90060	TRANSFORMER				1				
25	1	982343-05014	BOLT, M5X14	6	6	6	6				
26	1	22117-050000	WASHER, 5	26	26	26	26				
27	1	22217-050000	WASHER, SPRING 5	22	22	22	22				
28	1	26716-050002	NUT, M5	24	24	24	24				
29	1	26116-050502	BOLT, M5X 50 PLATED	2	2	2	2				
30	1	982513-10060	RECTIFIER	1	1	1	1				
31	1	982343-03015	SCREW, M3X15	1	1	1	1				
32	1	982030-10300	WASHER 3	1	1	1	1				
33	1	982023-10300	NUT M3	1	1	1	1				
34	1	982513-10050	RECTIFIER	2	2	2	2				
35	1	982511-10040	RESISTOR 60W-10	1	1	1	1				
36	1	982511-10030	RESISTOR 30W-30			1	1				
37	1	26557-040122	SCREW, M4X12	2	2	4	4				
38	1	982513-70160	SURGE ABSORBER	1	1	1	1				
39	1	26557-040122	SCREW, M4X12	2	2	2	2				
40A	1	982511-50010	TAP, TERMINAL	1	1	1					
40B	1	982511-50010	TAP, TERMINAL				1				
40C	1	982511-50040	TAP, TERMINAL				1				
41	1	26116-050152	BOLT M 5X 15 PLATED	6	6	6	6				
42	1	982518-60240	GUARD	1	1	1	1				
43	1	982317-00070	BOLT	2	2	2	2				
44	1	982514-00040	RELAY	1	1	1	1				

N:Old ←Yes/No→ New. Q:Old ←No/Yes→ New. R:Old ←Yes/Yes→ New. S:Old ←No/No→ New. W:Add. Z:Discontinued. F:Interchangeable by set. K:Q'ty Change

++ CONTINUE ++

Copyright (C) YANMAR GLOBAL CS CO., LTD. All RightsReserved.

Fig.85. INSTRUMENT PANEL

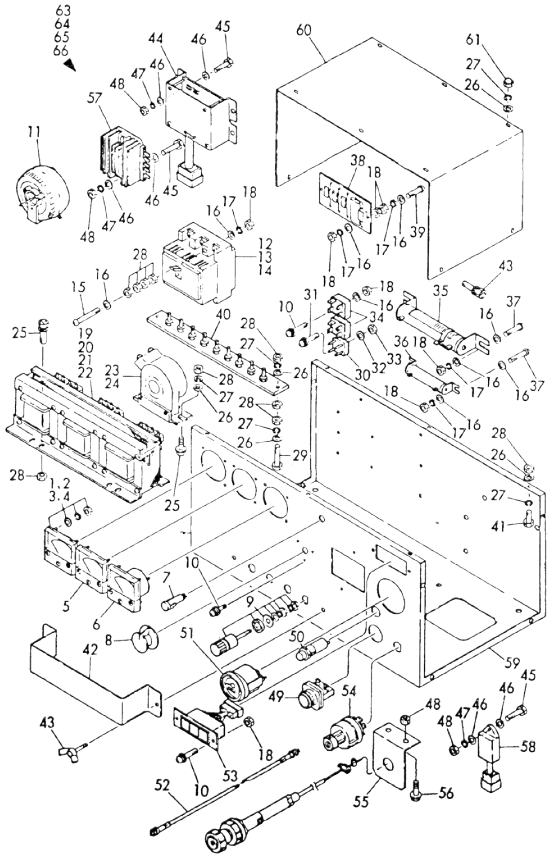

Remarks
(1) INCLUDE REF.NO.1-62 PARTS.

(A)=YEG12H-BS (D)=YEG35H-BS
(B)=YEG15H-BS (E)=
(C)=YEG25H-BS (F)=

No.	Lev.	Parts No.	Description	Q'ty (A)	(B)	(C)	(D)	(E)	(F)	I	R
45	1	26116-060252	BOLT, M6X 25 PLATED	5	5	5	5				
46	1	22117-060000	WASHER, 6	10	10	10	10				
47	1	22217-060000	WASHER, SPRING 6	5	5	5	5				
48	1	26756-060002	NUT, LOCK M6	7	7	7	7				
49	1	982517-70100	SWITCH	1	1	1	1				
50	1	124559-77971	LAMP, PILOT	1	1	1	1				
51	1	171080-91100	TACHOMETER	1	1	1	1				
52A	1	194145-56901	CABLE ASSY, METER	1	1	1					
52B	1	42130-502220	CABLE, TACHOMETER				1				
53	1	170038-91310	LAMP	1	1	1	1				
54	1	121400-91251	SWITCH, STARTER	1	1	1	1				
55	1	982215-00600	BRACKET, THROTTLE	1	1	1	1				
56	1	26116-060162	BOLT, M6X 16 PLATED	2	2	2	2				
57	1	119660-77710	LIMITER, CURRENT 15A	1	1	1	1				
58	1	124559-77971	LAMP, PILOT	1	1	1	1				
59A	1	982515-70405	PANEL, 200-480V	1	1						
59B	1	982515-70415	PANEL, 380-480V			1					
59C	1	982515-70425	PANEL, 200-220V			1					
59D	1	982515-70435	PANEL, 380-480V				1				
59E	1	982515-70445	PANEL, 200-220V				1				
60	1	982515-80320	COVER, PANEL	1	1	1	1				
61	1	982036-05002	CAP NUT M 5	6	6	6	6				
62	1	982343-05014	BOLT, M5X14	4	4	4	4				
63A	1	982519-30195	PANEL ASSY,50HZ/200V	1							1
63B	1	982519-30205	PANEL ASSY,50HZ/220V	1							1
63C	1	982519-30215	PANEL ASSY,50HZ/380V	1							1
63D	1	982519-30225	PANEL ASSY,50HZ/400V	1							1
63E	1	982519-30235	PANEL ASSY,50HZ/415V	1							1
63F	1	982519-30245	PANEL ASSY,60HZ/220V	1							1
63G	1	982519-30255	PANEL ASSY,60HZ/380V	1							1
63H	1	982519-30265	PANEL ASSY,60HZ/440V	1							1
63I	1	982519-30275	PANEL ASSY,60HZ/480V	1							1
64A	1	982519-30285	PANEL ASSY,50HZ/200V		1						1
64B	1	982519-30295	PANEL ASSY,50HZ/220V		1						1
64C	1	982519-30305	PANEL ASSY,50HZ/380V		1						1
64D	1	982519-30315	PANEL ASSY,50HZ/400V		1						1
64E	1	982519-30325	PANEL ASSY,50HZ/415V		1						1
64F	1	982519-30335	PANEL ASSY,60HZ/220V		1						1
64G	1	982519-30345	PANEL ASSY,60HZ/380V		1						1
64H	1	982519-30355	PANEL ASSY,60HZ/440V		1						1
64I	1	982519-30365	PANEL ASSY,60HZ/480V		1						1
65A	1	982519-30375	PANEL ASSY,50HZ/200V			1					1
65B	1	982519-30385	PANEL ASSY,50HZ/220V			1					1
65C	1	982519-30395	PANEL ASSY,50HZ/380V			1					1
65D	1	982519-30405	PANEL ASSY,50HZ/400V			1					1
65E	1	982519-30415	PANEL ASSY,50HZ/415V			1					1
65F	1	982519-30425	PANEL ASSY,60HZ/220V			1					1
65G	1	982519-30435	PANEL ASSY,60HZ/380V			1					1
65H	1	982519-30445	PANEL ASSY,60HZ/440V			1					1
65I	1	982519-30455	PANEL ASSY,60HZ/480V			1					1
66A	1	982519-30465	PANEL ASSY,50HZ/200V				1				1

N:Old ←Yes/No→ New. Q:Old ←No/Yes→ New. R:Old ←Yes/Yes→ New. S:Old ←No/No→ New. W:Add. Z:Discontinued. F:Interchangeable by set. K:Q'ty Change

++ CONTINUE ++

Copyright (C) YANMAR GLOBAL CS CO., LTD. All RightsReserved.

Fig.85. INSTRUMENT PANEL

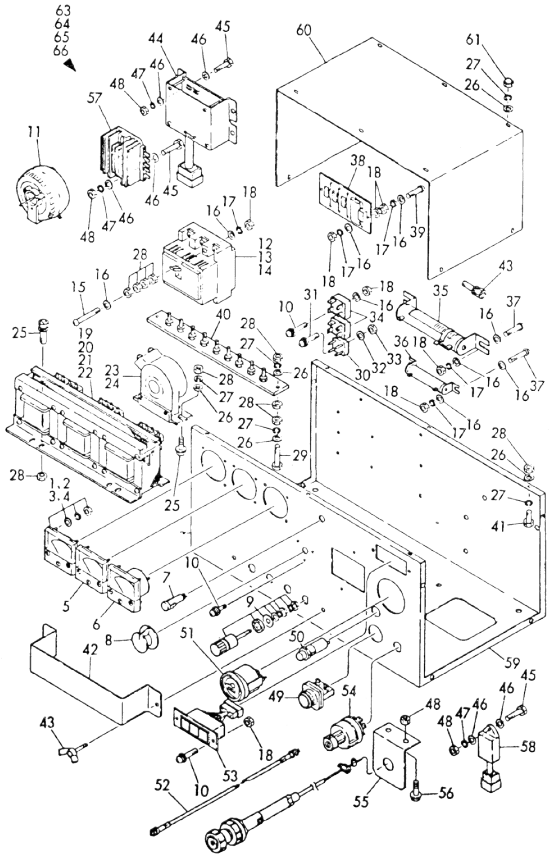

Remarks
(1) INCLUDE REF.NO.1-62 PARTS.

(A)=YEG12H-BS (D)=YEG35H-BS
(B)=YEG15H-BS (E)=
(C)=YEG25H-BS (F)=

No.	Lev.	Parts No.	Description	Q'ty (A)	(B)	(C)	(D)	(E)	(F)	I	R
66B	1	982519-30475	PANEL ASSY,50HZ/220V				1				1
66C	1	982519-30485	PANEL ASSY,50HZ/380V				1				1
66D	1	982519-30495	PANEL ASSY,50HZ/400V				1				1
66E	1	982519-30505	PANEL ASSY,50HZ/415V				1				1
66F	1	982519-30515	PANEL ASSY,60HZ/220V				1				1
66G	1	982519-30525	PANEL ASSY,60HZ/380V				1				1
66H	1	982519-30535	PANEL ASSY,60HZ/440V				1				1
66I	1	982519-30545	PANEL ASSY,60HZ/480V				1				1

N:Old ←Yes/No→ New. Q:Old ←No/Yes→ New. R:Old ←Yes/Yes→ New. S:Old ←No/No→ New. W:Add. Z:Discontinued. F:Interchangeable by set. K:Q'ty Change

Copyright (C) YANMAR GLOBAL CS CO., LTD. All RightsReserved.

Fig.86. BONNET (YEG12H/15H)

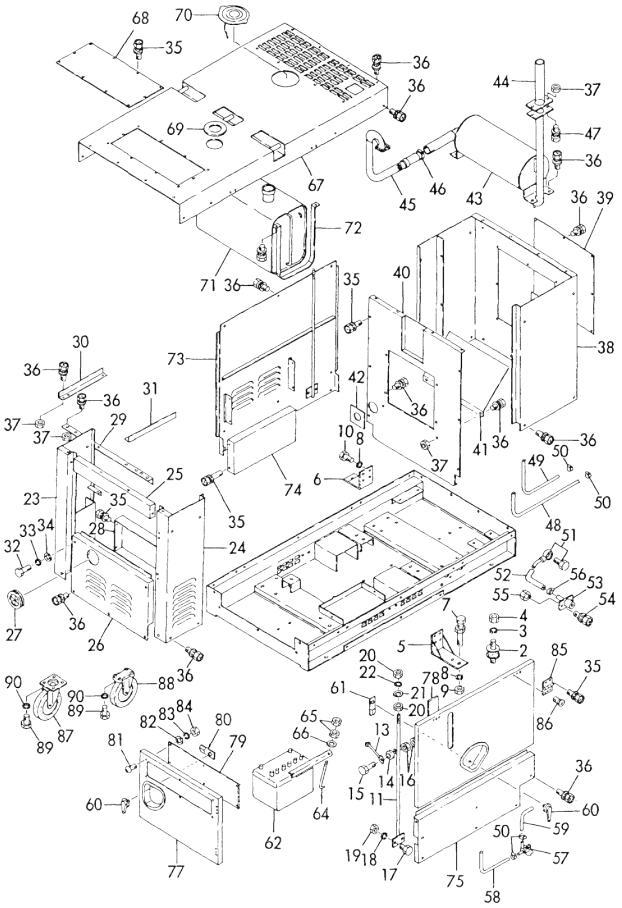

(A)=YEG12H-BS
(B)=YEG15H-BS
(C)=YEG25H-BS
(D)=YEG35H-BS
(E)=
(F)=

No.	Lev.	Parts No.	Description	Q'ty (A)	(B)	(C)	(D)	(E)	(F)	I	R
1A	1	982215-20261	COMMON BED	1							
1B	1	982215-20262	COMMON BED		1						
2	1	982219-00460	RUBBER, CUSHION	4	4						
3	1	22217-100000	WASHER, SPRING 10	8	8						
4	1	26716-100002	NUT, M10	8	8						
5	1	982215-20263	MOUNT	1	1						
6	1	982215-20264	MOUNT	1	1						
7	1	26117-100704	BOLT M10X 70 PLATED	2	2						
8	1	22217-100000	WASHER, SPRING 10	10	10						
9	1	26716-100002	NUT, M10	4	4						
10	1	26112-100254	BOLT M10X 25	8	8						
11	1	982215-20265	BOLT, M12	1	1						
12	1	982215-20266	BOLT, M12	1	1						
13	1	982701-10610	ARM	1	1						
14	1	982590-00010	BUSH	1	1						
15	1	26117-060504	BOLT M 6X 50 PLATED	1	1						
16	1	26716-060002	NUT, M6	1	1						
17	1	26117-100304	BOLT M10X 30 PLATED	4	4						
18	1	22217-100000	WASHER, SPRING 10	4	4						
19	1	26716-100002	NUT, M10	4	4						
20	1	26716-120002	NUT, M12	4	4						
21	1	22117-120000	WASHER, 12	2	2						
22	1	22217-120000	WASHER, SPRING 12	2	2						
23	1	982215-20267	COVER	1	1						
24	1	982215-20268	COVER	1	1						
25	1	982215-20269	COVER	1	1						
26	1	982215-20270	COVER	1	1						
27	1	982514-70540	GROMMET	1	1						
28	1	982215-20271	DUCT	1	1						
29	1	982215-20272	BRACKET	1	1						
30	1	982215-20273	BRACKET	1	1						
31	1	982215-20274	BRACKET	1	1						
32	1	26117-080504	BOLT M 8X 50 PLATED	2	2						
33	1	22117-080000	WASHER, 8	2	2						
34	1	22217-080000	WASHER, SPRING 8	2	2						
35	1	26014-050169	BOLT M 5X 16	28	28						
36	1	26014-080209	BOLT, M8X 20	76	76						
37	1	26716-080002	NUT, M8	8	8						
38	1	982215-20275	PANEL	1	1						
39	1	982215-20276	PLATE	1	1						
40A	1	982215-20277	PARTITION	1							
40B	1	982215-20278	PARTITION		1						
41	1	982215-20279	SHIELD	1	1						
42	1	982277-00090	GASKET	1	1						
43	1	982275-00310	SILENCER	1	1						
44	1	982275-00360	TAIL	1	1						
45A	1	982276-00240	PIPE, FLEXIBLE	1							
45B	1	982276-00250	PIPE, FLEXIBLE		1						
46	1	982277-00040	CLAMP,EXH.	1	1						
47	1	26014-080309	BOLT, M8X 30	2	2						
48	1	982283-00280	HOSE, FUEL	1	1						

N:Old ←Yes/No→ New. Q:Old ←No/Yes→ New. R:Old ←Yes/Yes→ New. S:Old ←No/No→ New. W:Add. Z:Discontinued. F:Interchangeable by set. K:Q'ty Change

++ CONTINUE ++

Copyright (C) YANMAR GLOBAL CS CO., LTD. All RightsReserved.

Fig.86. BONNET (YEG12H/15H)

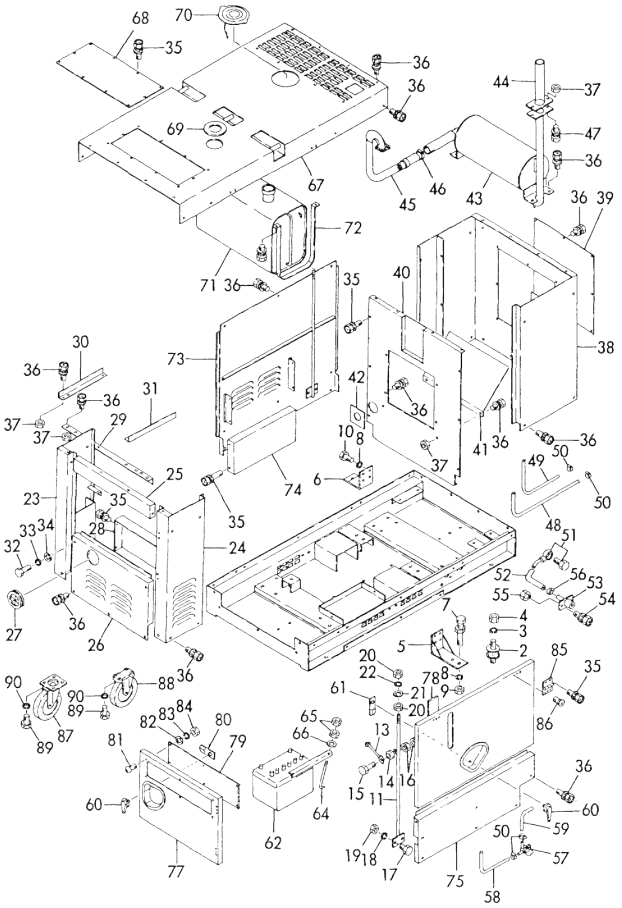

(A)=YEG12H-BS
(B)=YEG15H-BS
(C)=YEG25H-BS
(D)=YEG35H-BS
(E)=
(F)=

No.	Lev.	Parts No.	Description	Q'ty (A)	(B)	(C)	(D)	(E)	(F)	I	R
49	1	982283-00290	HOSE, FUEL	1	1						
50	1	982284-00016	CLAMP	4	4						
51A	1	982217-30020	JOINT	1							
51B	1	982217-30220	JOINT		1						
52A	1	982283-00220	HOSE, OIL	1							
52B	1	982283-00230	HOSE, OIL		1						
53	1	982217-30050	DRAIN	1	1						
54	1	26014-060169	BOLT, M6X 16	2	2						
55	1	26716-060002	NUT, M6	2	2						
56	1	982284-00025	CLIP	2	2						
57	1	129150-49100	COCK ASSY, 3-WAY	1	1						
58	1	982283-00390	HOSE, WATER	1	1						
59	1	982283-00380	HOSE, WATER	1	1						
60	1	982287-00010	HANDLE	2	2						
61	1	982287-00130	LEVER A	1	1						
62	1	982217-00030	BATTERY	1	1						
63	1	982212-30050	HOLDER	1	1						
64	1	982212-30070	CLAMP	2	2						
65	1	26716-060002	NUT, M6	4	4						
66	1	22117-060000	WASHER, 6	2	2						
67	1	982215-20280	COVER	1	1						
68	1	982215-20281	PLATE	1	1						
69	1	982217-90210	CAP	1	1						
70	1	982701-10710	CAP, RUBBER	1	1						
71	1	982217-90570	FUEL TANK	1	1						
72	1	982218-00210	BAND	2	2						
73	1	982215-20282	COVER	1	1						
74	1	982215-20283	DUCT	1	1						
75	1	982215-20284	COVER	1	1						
76	1	982215-20285	DOOR	1	1						
77	1	982215-20286	DOOR	1	1						
78	1	982215-20287	HOLE, CHECKING A	1	1						
79	1	982215-20288	HOLE, CHECKING B	1	1						
80	1	982287-00120	LEVER	1	1						
81	1	982332-56016	SCREW	6	6						
82	1	982242-26000	WASHER	6	6						
83	1	982242-46000	WASHER	6	6						
84	1	26713-060002	NUT, M6	6	6						
85	1	982286-00060	HINGE	4	4						
86	1	982332-55016	SCREW, M5X16	12	12						
87	1	982219-10060	WHEEL 200DX155W	2	2						
88	1	982219-10010	WHEEL	2	2						
89	1	26117-100204	BOLT, M10X 20 PLATED	16	16						
90	1	22217-100000	WASHER, SPRING 10	16	16						

N:Old ←Yes/No→ New. Q:Old ←No/Yes→ New. R:Old ←Yes/Yes→ New. S:Old ←No/No→ New. W:Add. Z:Discontinued. F:Interchangeable by set. K:Q'ty Change

Copyright (C) YANMAR GLOBAL CS CO., LTD. All RightsReserved.

Fig.87. BONNET (YEG25H/35H)

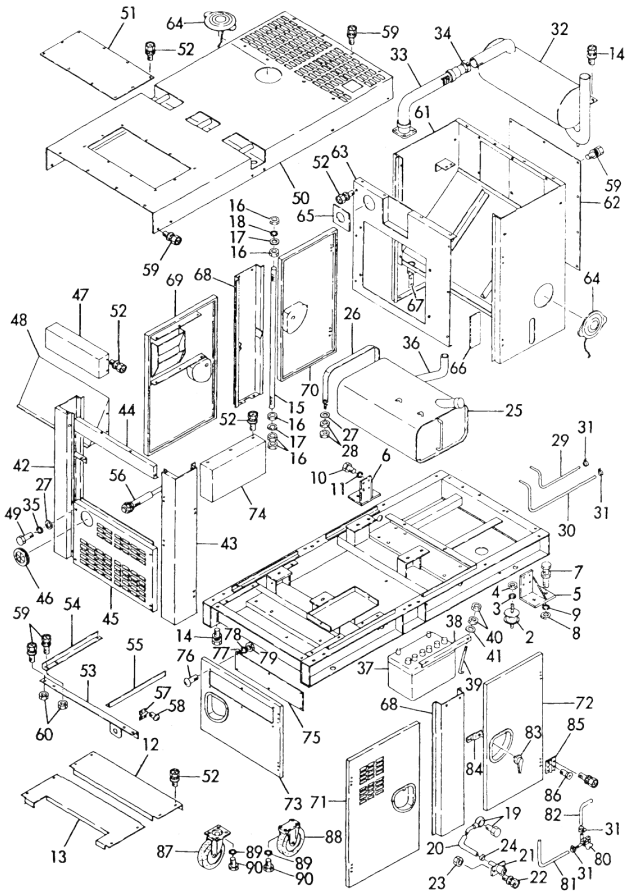

(A)=YEG12H-BS (D)=YEG35H-BS
(B)=YEG15H-BS (E)=
(C)=YEG25H-BS (F)=

No.	Lev.	Parts No.	Description	Q'ty (A)	(B)	(C)	(D)	(E)	(F)	I	R
1A	1	982215-20289	COMMON BED			1					
1B	1	982215-20290	COMMON BED				1				
2	1	982219-00110	RUBBER, CUSHION			4	4				
3	1	22217-120000	WASHER, SPRING 12			8	8				
4	1	26716-120002	NUT, M12			8	8				
5	1	982215-20294	MOUNT			1	1				
6	1	982215-20295	MOUNT			1	1				
7	1	26117-120904	BOLT, M12X 90 PLATED			2	2				
8	1	26716-120002	NUT, M12			4	4				
9	1	22217-120000	WASHER, SPRING 12			2	2				
10	1	26112-100254	BOLT M10X 25			8	8				
11	1	22217-100000	WASHER, SPRING 10			8	8				
12A	1	982215-20296	DUCT			1					
12B	1	982215-20297	DUCT				1				
13A	1	982215-20298	DUCT			1					
13B	1	982215-20300	DUCT				1				
14	1	26014-080259	BOLT M 8X 25			22	22				
15	1	982215-20301	BOLT			2	2				
16	1	26716-160002	NUT, M16			10	10				
17	1	22117-160000	WASHER, 16			4	4				
18	1	22217-160000	WASHER, SPRING 16			2	2				
19	1	982217-30220	JOINT			1	1				
20A	1	982283-00240	HOSE, OIL			1					
20B	1	982283-00250	HOSE,OIL				1				
21	1	982217-30050	DRAIN			1	1				
22	1	26014-060169	BOLT, M6X 16			2	2				
23	1	26716-060002	NUT, M6			2	2				
24	1	982284-00025	CLIP			1	1				
25	1	982217-90580	TANK, FUEL			1	1				
26	1	982218-00190	BAND			2	2				
27	1	22117-080000	WASHER, 8			8	8				
28	1	26716-080002	NUT, M8			8	8				
29A	1	982283-00300	HOSE, FUEL			1					
29B	1	982283-00320	HOSE, FUEL				1				
30A	1	982283-00310	HOSE, FUEL			1					
30B	1	982283-00330	HOSE, FUEL				1				
31	1	982284-00016	CLAMP			4	4				
32	1	982275-00320	SILENCER			1	1				
33A	1	982276-00260	PIPE, FLEXIBLE			1					
33B	1	982276-00270	PIPE, FLEXIBLE				1				
34	1	982277-00050	CLAMP			1	1				
35	1	22217-080000	WASHER, SPRING 8			4	4				
36	1	982283-00440	HOSE			1	1				
37	1	982217-00040	BATTERY			1	1				
38	1	982212-30070	CLAMP			2	2				
39	1	982212-30080	BOLT			2	2				
40	1	26716-060002	NUT, M6			4	4				
41	1	22117-060000	WASHER, 6			2	2				
42	1	982215-20302	COVER			1	1				
43	1	982215-20303	COVER			1	1				
44	1	982215-20304	COVER			1	1				

N:Old $\xleftarrow[\text{No}]{\text{Yes}}$ New. Q:Old $\xleftarrow[\text{Yes}]{\text{No}}$ New. R:Old $\xleftarrow[\text{Yes}]{\text{Yes}}$ New. S:Old $\xleftarrow[\text{No}]{\text{No}}$ New. W:Add. Z:Discontinued. F:Interchangeable by set. K:Q'ty Change

++ CONTINUE ++

Copyright (C) YANMAR GLOBAL CS CO., LTD. All RightsReserved.

Fig.87. BONNET (YEG25H/35H)

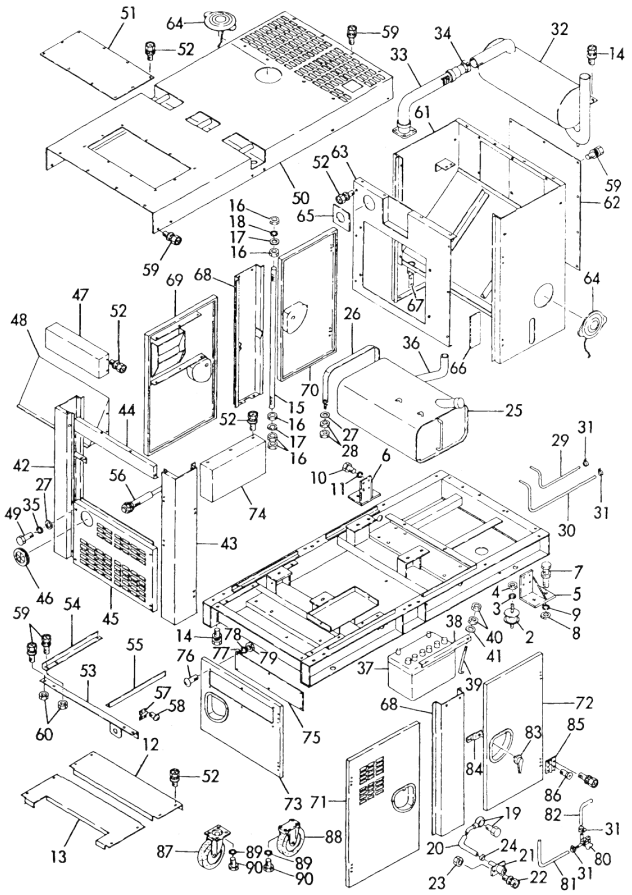

(A)=YEG12H-BS (D)=YEG35H-BS
(B)=YEG15H-BS (E)=
(C)=YEG25H-BS (F)=

No.	Lev.	Parts No.	Description	Q'ty (A)	(B)	(C)	(D)	(E)	(F)	I	R
45	1	982215-20305	COVER			1	1				
46	1	982514-70540	GROMMET			1	1				
47	1	982215-20306	DUCT			1	1				
48	1	982215-20307	DUCT			1	1				
49	1	26117-080504	BOLT M 8X 50 PLATED			4	4				
50A	1	982215-20308	COVER			1					
50B	1	982215-20310	COVER				1				
51	1	982215-20311	COVER			1	1				
52	1	26014-050169	BOLT M 5X 16			74	74				
53	1	982215-20312	BRACKET			1	1				
54	1	982215-20313	BRACKET			1	1				
55	1	982215-20314	BRACKET			1	1				
56A	1	982215-00800	THROTTLE			1					
56B	1	982215-00810	THROTTLE				1				
57	1	982215-00840	CLAMP			1	1				
58	1	26014-050149	BOLT M 5X 14			4	4				
59	1	26014-080209	BOLT, M8X 20			44	44				
60	1	26716-080002	NUT, M8			8	8				
61	1	982215-00811	COVER			1	1				
62	1	982215-20315	PLATE			1	1				
63A	1	982215-20316	PARTITION			1					
63B	1	982215-20317	PARTITION				1				
64	1	982701-10710	CAP, RUBBER			2	2				
65	1	982277-00100	GASKET			1	1				
66	1	982215-20318	HOLE, CHECKING A			1	1				
67A	1	982215-20319	BRACKET			1					
67B	1	982215-20320	BRACKET				1				
68	1	982215-20321	COVER			2	2				
69A	1	982215-20322	DOOR			1					
69B	1	982215-20323	DOOR				1				
70A	1	982215-20324	DOOR			1					
70B	1	982215-20325	DOOR				1				
71A	1	982215-20326	DOOR			1					
71B	1	982215-20327	DOOR				1				
72A	1	982215-20328	DOOR			1					
72B	1	982215-20329	DOOR D				1				
73	1	982215-20330	DOOR			1	1				
74A	1	982215-20331	DUCT			1					
74B	1	982215-20332	DUCT				1				
75	1	982215-20333	HOLE, CHECKING B			1	1				
76	1	982332-56016	SCREW			6	6				
77	1	982242-26000	WASHER			6	6				
78	1	982242-46000	WASHER			6	6				
79	1	26713-060002	NUT, M6			6	6				
80	1	129150-49100	COCK ASSY, 3-WAY			1	1				
81A	1	982283-00410	HOSE, WATER			1					
81B	1	982283-00430	HOSE A				1				
82A	1	982283-00400	HOSE, WATER			1					
82B	1	982283-00420	HOSE B				1				
83	1	982287-00010	HANDLE			5	5				
84	1	982287-00120	LEVER			5	5				

N:Old ←Yes/No→ New. Q:Old ←No/Yes→ New. R:Old ←Yes/Yes→ New. S:Old ←No/No→ New. W:Add. Z:Discontinued. F:Interchangeable by set. K:Q'ty Change

++ CONTINUE ++

Copyright (C) YANMAR GLOBAL CS CO., LTD. All RightsReserved.

Fig.87. BONNET (YEG25H/35H)

(A)=YEG12H-BS
(B)=YEG15H-BS
(C)=YEG25H-BS
(D)=YEG35H-BS
(E)=
(F)=

No.	Lev.	Parts No.	Description	Q'ty (A)	(B)	(C)	(D)	(E)	(F)	I	R
85	1	982286-00060	HINGE			10	10				
86	1	982332-55016	SCREW, M5X16			30	30				
87	1	982219-10070	CASTER			2	2				
88	1	982219-10050	WHEEL			2	2				
89	1	26116-100202	BOLT, M10X 20 PLATED			16	16				
90	1	26716-100002	NUT, M10			16	16				

N:Old ←Yes/No→ New. Q:Old ←No/Yes→ New. R:Old ←Yes/Yes→ New. S:Old ←No/No→ New. W:Add. Z:Discontinued. F:Interchangeable by set. K:Q'ty Change

Copyright (C) YANMAR GLOBAL CS CO., LTD. All RightsReserved.

Fig.88. GENERATOR

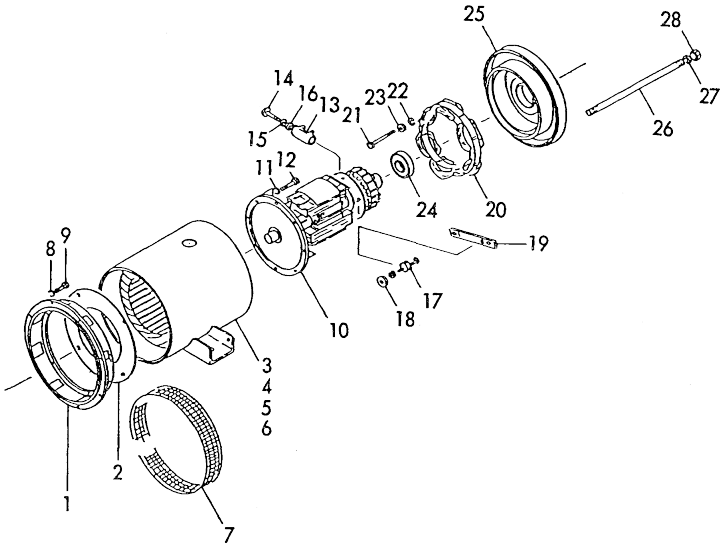

(A)=YEG8HS-BS
(B)=YEG10HS-BS
(C)=YEG20HS-BS
(D)=YEG24HS-BS
(E)=
(F)=

No.	Lev.	Parts No.	Description	Q'ty (A)	(B)	(C)	(D)	(E)	(F)	I	R
1A	1	982112-00150	HOUSING	1	1						
1B	1	982112-00120	HOUSING			1	1				
2A	1	982112-20180	GUIDE,AIR	1	1						
2B	1	982112-20150	GUIDE, AIR			1	1				
3A	1	982174-81505	STATOR, 50HZ/100V	1							
3B	1	982174-81515	STATOR, 50HZ/110V	1							
3C	1	982174-81525	STATOR, 50HZ/200V	1							
3D	1	982174-81535	STATOR, 50HZ/220V	1							
3E	1	982174-81545	STATOR, 50HZ/230V	1							
3F	1	982174-81555	STATOR, 50HZ/240V	1							
3G	1	982174-81565	STATOR,50HZ/110/220V	1							
3H	1	982174-81575	STATOR,50HZ/115/230V	1							
3I	1	982174-81585	STATOR, 60HZ/110V	1							
3J	1	982174-81595	STATOR, 60HZ/115V	1							
3K	1	982174-81605	STATOR, 60HZ/120V	1							
3L	1	982174-81615	STATOR, 60HZ/220V	1							
3M	1	982174-81625	STATOR, 60HZ/230V	1							
3N	1	982174-81635	STATOR, 60HZ/240V	1							
3O	1	982174-81645	STATOR,60HZ/110/220V	1							
3P	1	982174-81655	STATOR,60HZ/115/230V	1							
3Q	1	982174-81665	STATOR,60HZ/120/240V	1							
4A	1	982174-81675	STATOR, 50HZ/100V		1						
4B	1	982174-81685	STATOR, 50HZ/110V		1						
4C	1	982174-81695	STATOR, 50HZ/200V		1						
4D	1	982174-81705	STATOR, 50HZ/220V		1						
4E	1	982174-81715	STATOR, 50HZ/230V		1						
4F	1	982174-81725	STATOR, 50HZ/240V		1						
4G	1	982174-81735	STATOR,50HZ/110/220V		1						
4H	1	982174-81745	STATOR,50HZ/115/230V		1						
4I	1	982174-81755	STATOR, 60HZ/110V		1						
4J	1	982174-81765	STATOR, 60HZ/115V		1						
4K	1	982174-81775	STATOR, 60HZ/120V		1						
4L	1	982174-81785	STATOR, 60HZ/220V		1						
4M	1	982174-81795	STATOR, 60HZ/230V		1						
4N	1	982174-81805	STATOR, 60HZ/240V		1						
4O	1	982174-81815	STATOR,60HZ/110/220V		1						
4P	1	982174-81825	STATOR,60HZ/115/230V		1						
4Q	1	982174-81835	STATOR,60HZ/120/240V		1						
5A	1	982174-81845	STATOR, 50HZ/100V			1					
5B	1	982174-81855	STATOR, 50HZ/110V			1					
5C	1	982174-81865	STATOR, 50HZ/200V			1					
5D	1	982174-81875	STATOR, 50HZ/220V			1					
5E	1	982174-81885	STATOR, 50HZ/230V			1					
5F	1	982174-81895	STATOR, 50HZ/240V			1					
5G	1	982174-81905	STATOR,50HZ/110/220V			1					
5H	1	982174-81915	STATOR,50HZ/115/230V			1					
5I	1	982174-81925	STATOR, 60HZ/110V			1					
5J	1	982174-81935	STATOR, 60HZ/115V			1					
5K	1	982174-81945	STATOR, 60HZ/120V			1					
5L	1	982174-81955	STATOR, 60HZ/220V			1					
5M	1	982174-81965	STATOR, 60HZ/230V			1					

Remarks
(M) MISPRINT.

N:Old $\frac{\text{Yes}}{\text{No}}$ New. Q:Old $\frac{\text{No}}{\text{Yes}}$ New. R:Old $\frac{\text{Yes}}{\text{Yes}}$ New. S:Old $\frac{\text{No}}{\text{No}}$ New. W:Add. Z:Discontinued. F:Interchangeable by set. K:Q'ty Change

++ CONTINUE ++

Copyright (C) YANMAR GLOBAL CS CO., LTD. All RightsReserved.

Fig.88. GENERATOR

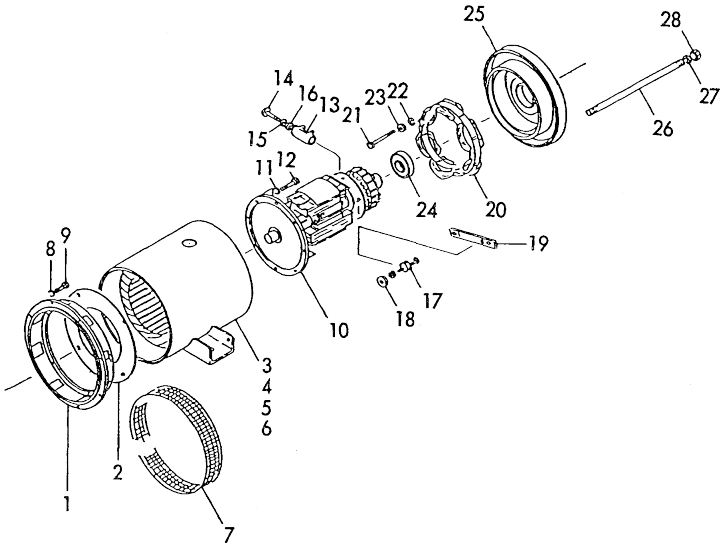

(A)=YEG8HS-BS
(B)=YEG10HS-BS
(C)=YEG20HS-BS
(D)=YEG24HS-BS
(E)=
(F)=

No.	Lev.	Parts No.	Description	Q'ty (A)	(B)	(C)	(D)	(E)	(F)	I	R
5N	1	982174-81975	STATOR, 60HZ/240V			1					
5O	1	982174-81985	STATOR,60HZ/110/220V			1					
5P	1	982174-81995	STATOR,60HZ/115/230V			1					
5Q	1	982174-82005	STATOR,60HZ/120/240V			1					
6A	1	982174-82015	STATOR, 50HZ/100V				1				
6B	1	982174-82025	STATOR, 50HZ/110V				1				
6C	1	982174-82035	STATOR, 50HZ/200V				1				
6D	1	982174-82045	STATOR, 50HZ/220V				1				
6E	1	982174-82055	STATOR, 50HZ/230V				1				
6F	1	982174-82065	STATOR, 50HZ/240V				1				
6G	1	982174-82075	STATOR,50HZ/110/220V				1				
6H	1	982174-82085	STATOR,50HZ/115/230V				1				
6I	1	982174-82095	STATOR, 60HZ/110V				1				
6J	1	982174-82105	STATOR, 60HZ/115V				1				
6K	1	982174-82115	STATOR, 60HZ/120V				1				
6L	1	982174-82125	STATOR, 60HZ/220V				1				
6M	1	982174-82135	STATOR, 60HZ/230V				1				
6N	1	982174-82145	STATOR, 60HZ/240V				1				
6O	1	982174-82155	STATOR,60HZ/110/220V				1				
6P	1	982174-82165	STATOR,60HZ/115/230V				1				
6Q	1	982174-82175	STATOR,60HZ/120/240V				1				
7A	1	982190-00010	GUARD	1	1						
7B	1	982190-00020	GUARD			1	1				
8	1	22217-100000	WASHER, SPRING 10	8	8	8	8				
9	1	26006-102502	BOLT 10X25	8	8	8	8				M
9-1	1	26116-100252	BOLT, M10X 25 PLATED	8	8	8	8				
10A	1	982116-90250	ROTOR SET	1							
10B	1	982116-90260	ROTER SET		1						
10C	1	982116-90270	ROTER SET			1					
10D	1	982116-90280	ROTER SET				1				
11	1	22217-080000	WASHER, SPRING 8	8	8	8	8				
12	1	982314-50835	BOLT, M8X35	8	8	8	8				
13	1	982117-10011	RESISTOR	1	1	1	1				
14	1	26557-040402	SCREW, M4X40	1	1	1	1				
15	1	22217-040000	WASHER, SPRING 4	1	1	1	1				
16	1	22117-040000	WASHER, 4	1	1	1	1				
17A	1	982512-10040	SILICON	4	4	4					
17B	1	982512-10050	SILICON	3	3	3					
17C	1	982512-10120	RECTIFIER				4				
17D	1	982512-10130	RECTIFIER				3				
18	1	982117-40010	WASHER	16	16	16	16				
19A	1	982111-90010	CONNECTOR	6	6						
19B	1	982111-90020	CONNECTOR			6	6				
20A	1	982110-90020	COIL, EXCITER FIELD	1	1						
20B	1	982110-90140	COIL, EXITER			1					
20C	1	982110-90100	COIL, FIELD				1				
21A	1	26116-060402	BOLT, M6X 40 PLATED	6	6	6					
21B	1	26116-060502	BOLT, M6X 50 PLATED				6				
22	1	22217-060000	WASHER, SPRING 6	6	6	6	6				
23	1	22117-060000	WASHER, 6	6	6	6	6				
24	1	24107-063074	BEARING, BALL 6307ZZ	1	1	1	1				

Remarks
(M) MISPRINT.

N:Old $\frac{\text{Yes}}{\text{No}}$ New. Q:Old $\frac{\text{No}}{\text{Yes}}$ New. R:Old $\frac{\text{Yes}}{\text{Yes}}$ New. S:Old $\frac{\text{No}}{\text{No}}$ New. W:Add. Z:Discontinued. F:Interchangeable by set. K:Q'ty Change

++ CONTINUE ++

Copyright (C) YANMAR GLOBAL CS CO., LTD. All RightsReserved.

Fig.88. GENERATOR

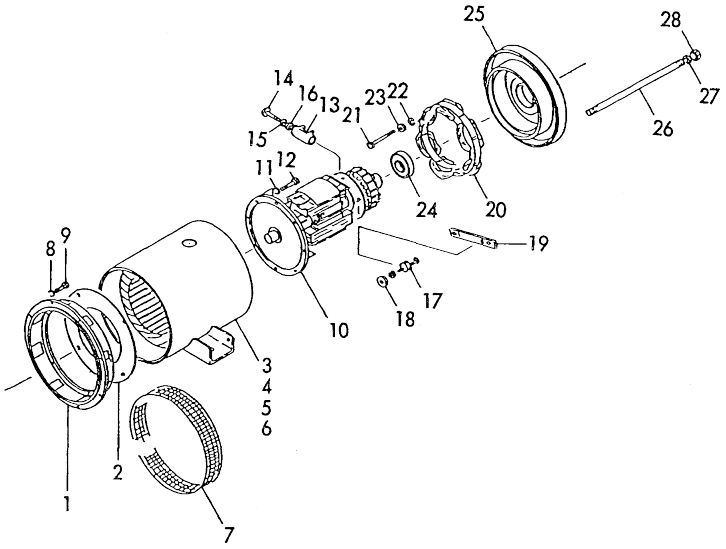

Remarks
(M) MISPRINT.

(A)=YEG8HS-BS
(B)=YEG10HS-BS
(C)=YEG20HS-BS
(D)=YEG24HS-BS
(E)=
(F)=

No.	Lev.	Parts No.	Description	Q'ty (A)	(B)	(C)	(D)	(E)	(F)	I	R
25A	1	982110-20680	BRACKET	1	1						
25B	1	982110-20300	BRACKET			1	1				
26A	1	982118-10070	THROUGH BOLT M10X430		4						
26B	1	982118-10290	BOLT M10X450			4					
26C	1	982118-10100	BOLT, M10X510				4				
26D	1	982118-10380	BOLT, M10X395	4							
27	1	22217-100000	WASHER, SPRING 10	4	4	4	4				
28	1	26716-100002	NUT, M10	4	4	4	4				

N:Old ◄Yes/No► New. Q:Old ◄No/Yes► New. R:Old ◄Yes/Yes► New. S:Old ◄No/No► New. W:Add. Z:Discontinued. F:Interchangeable by set. K:Q'ty Change

Copyright (C) YANMAR GLOBAL CS CO., LTD. All RightsReserved.

Fig.89. INSTRUMENT PANEL

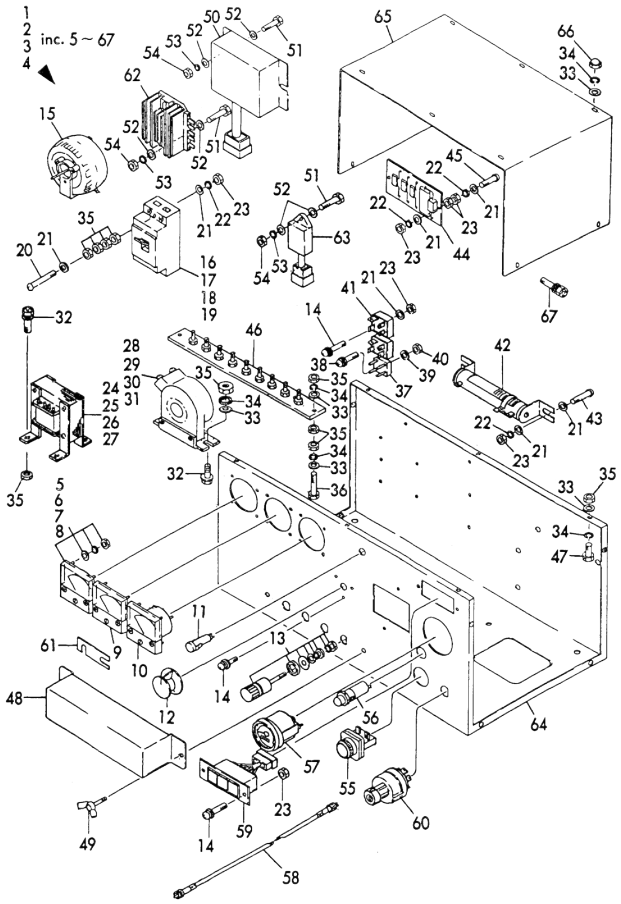

(A)=YEG8HS-BS
(B)=YEG10HS-BS
(C)=YEG20HS-BS
(D)=YEG24HS-BS
(E)=
(F)=

No.	Lev.	Parts No.	Description	Q'ty (A)	(B)	(C)	(D)	(E)	(F)	I	R
1A	1	982519-30905	PANEL, 50HZ/100V	1							
1B	1	982519-30915	PANEL, 50HZ/110V	1							
1C	1	982519-30925	PANEL, 50HZ/200V	1							
1D	1	982519-30935	PANEL, 50HZ/220V	1							
1E	1	982519-30945	PANEL, 50HZ/230V	1							
1F	1	982519-30955	PANEL, 50HZ/240V	1							
1G	1	982519-30965	PANEL, 50HZ/110/220V	1							
1H	1	982519-30975	PANEL, 50HZ/115/230V	1							
1I	1	982519-30985	PANEL, 60HZ/110V	1							
1J	1	982519-30995	PANEL, 60HZ/115V	1							
1K	1	982519-31005	PANEL, 60HZ/120V	1							
1L	1	982519-31015	PANEL, 60HZ/220V	1							
1M	1	982519-31025	PANEL, 60HZ/230V	1							
1N	1	982519-31035	PANEL, 60HZ/240V	1							
1O	1	982519-31045	PANEL, 60HZ/110/220V	1							
1P	1	982519-31055	PANEL, 60HZ/115/230V	1							
1Q	1	982519-31065	PANEL, 60HZ/120/240V	1							
2A	1	982519-31075	PANEL, 50HZ/100V		1						
2B	1	982519-31085	PANEL, 50HZ/110V		1						
2C	1	982519-31095	PANEL, 50HZ/200V		1						
2D	1	982519-31105	PANEL, 50HZ/220V		1						
2E	1	982519-31115	PANEL, 50HZ/230V		1						
2F	1	982519-31125	PANEL, 50HZ/240V		1						
2G	1	982519-31135	PANEL, 50HZ/110/220V		1						
2H	1	982519-31145	PANEL, 50HZ/115/230V		1						
2I	1	982519-31155	PANEL, 60HZ/110V		1						
2J	1	982519-31165	PANEL, 60HZ/115V		1						
2K	1	982519-31175	PANEL, 60HZ/120V		1						
2L	1	982519-31185	PANEL, 60HZ/220V		1						
2M	1	982519-31195	PANEL, 60HZ/230V		1						
2N	1	982519-31205	PANEL, 60HZ/240V		1						
2O	1	982519-31215	PANEL, 60HZ/110/220V		1						
2P	1	982519-31225	PANEL, 60HZ/115/230V		1						
2Q	1	982519-31235	PANEL, 60HZ/120/240V		1						
3A	1	982519-31245	PANEL, 50HZ/100V			1					
3B	1	982519-31255	PANEL, 50HZ/110V			1					
3C	1	982519-31265	PANEL, 50HZ/200V			1					
3D	1	982519-31275	PANEL, 50HZ/220V			1					
3E	1	982519-31285	PANEL, 50HZ/230V			1					
3F	1	982519-31295	PANEL, 50HZ/240V			1					
3G	1	982519-31305	PANEL, 50HZ/110/220V			1					
3H	1	982519-31315	PANEL, 50HZ/115/230V			1					
3I	1	982519-31325	PANEL, 60HZ/110V			1					
3J	1	982519-31335	PANEL, 60HZ/115V			1					
3K	1	982519-31345	PANEL, 60HZ/120V			1					
3L	1	982519-31355	PANEL, 60HZ/220V			1					
3M	1	982519-31365	PANEL, 60HZ/230V			1					
3N	1	982519-31375	PANEL, 60HZ/240V			1					
3O	1	982519-31385	PANEL, 60HZ/110/220V			1					
3P	1	982519-31395	PANEL, 60HZ/115/230V			1					
3Q	1	982519-31405	PANEL, 60HZ/120/240V			1					

N:Old ←Yes/No→ New. Q:Old ←No/Yes→ New. R:Old ←Yes/Yes→ New. S:Old ←No/No→ New. W:Add. Z:Discontinued. F:Interchangeable by set. K:Q'ty Change

++ CONTINUE ++

Copyright (C) YANMAR GLOBAL CS CO., LTD. All RightsReserved.

Fig.89. INSTRUMENT PANEL

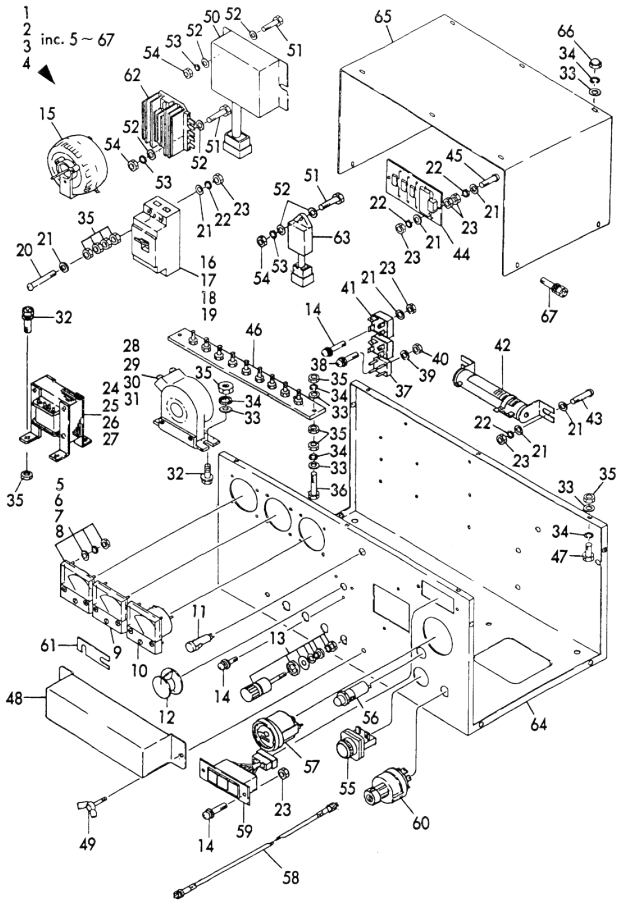

(A)=YEG8HS-BS
(B)=YEG10HS-BS
(C)=YEG20HS-BS
(D)=YEG24HS-BS
(E)=
(F)=

No.	Lev.	Parts No.	Description	Q'ty (A)	(B)	(C)	(D)	(E)	(F)	I	R
4A	1	982519-31415	PANEL, 50HZ/100V				1				
4B	1	982519-31425	PANEL, 50HZ/110V				1				
4C	1	982519-31435	PANEL, 50HZ/200V				1				
4D	1	982519-31445	PANEL, 50HZ/220V				1				
4E	1	982519-31455	PANEL, 50HZ/230V				1				
4F	1	982519-31465	PANEL, 50HZ/240V				1				
4G	1	982519-31475	PANEL, 50HZ/110/220V				1				
4H	1	982519-31485	PANEL, 50HZ/115/230V				1				
4I	1	982519-31495	PANEL, 60HZ/110V				1				
4J	1	982519-31505	PANEL, 60HZ/115V				1				
4K	1	982519-31515	PANEL, 60HZ/120V				1				
4L	1	982519-31525	PANEL, 60HZ/220V				1				
4M	1	982519-31535	PANEL, 60HZ/230V				1				
4N	1	982519-31545	PANEL, 60HZ/240V				1				
4O	1	982519-31555	PANEL, 60HZ/110/220V				1				
4P	1	982519-31565	PANEL, 60HZ/115/230V				1				
4Q	1	982519-31575	PANEL, 60HZ/120/240V				1				
5A	2	982515-60060	AMMETER	1							
5B	2	982515-60050	AMMETER	1							
5C	2	982515-60040	AMMETER	1							
5D	2	982515-60120	AMMETER	1							
5E	2	982515-60120	AMMETER	1							
5F	2	982515-60120	AMMETER	1							
5G	2	982515-60060	AMMETER	1							
5H	2	982515-60060	AMMETER	1							
5I	2	982515-60050	AMMETER	1							
6A	2	982515-60070	AMMETER		1						
6B	2	982515-60060	AMMETER		1						
6C	2	982515-60050	AMMETER		1						
6D	2	982515-60040	AMMETER		1						
6E	2	982515-60120	AMMETER		1						
6F	2	982515-60120	AMMETER		1						
6G	2	982515-60070	AMMETER		1						
6H	2	982515-60070	AMMETER		1						
6I	2	982515-60060	AMMETER		1						
6J	2	982515-60050	AMMETER		1						
6K	2	982515-60050	AMMETER		1						
6L	2	982515-60040	AMMETER		1						
6M	2	982515-60130	AMMETER		1						
6N	2	982515-60130	AMMETER		1						
6O	2	982515-60120	AMMETER		1						
7A	2	982515-60080	AMMETER			1					
7B	2	982515-60060	AMMETER			1					
7C	2	982515-60060	AMMETER			1					
7D	2	982515-60050	AMMETER			1					
7E	2	982515-60140	AMMETER			1					
7F	2	982515-60130	AMMETER			1					
7G	2	982515-60060	AMMETER			1					
7H	2	982515-60140	AMMETER			1					
7I	2	982515-60140	AMMETER			1					
7J	2	982515-60140	AMMETER			1					

N:Old ←Yes/No→ New. Q:Old ←No/Yes→ New. R:Old ←Yes/Yes→ New. S:Old ←No/No→ New. W:Add. Z:Discontinued. F:Interchangeable by set. K:Q'ty Change

++ CONTINUE ++

Copyright (C) YANMAR GLOBAL CS CO., LTD. All RightsReserved.

Fig.89. INSTRUMENT PANEL

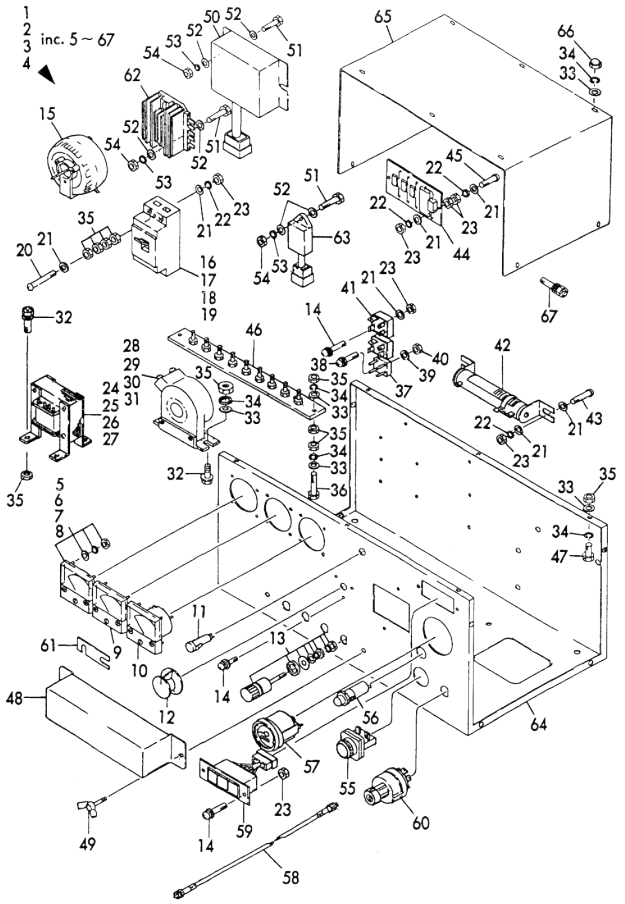

(A)=YEG8HS-BS
(B)=YEG10HS-BS
(C)=YEG20HS-BS
(D)=YEG24HS-BS
(E)=
(F)=

No.	Lev.	Parts No.	Description	Q'ty (A)	(B)	(C)	(D)	(E)	(F)	I	R
8A	2	982515-60090	AMMETER(50/60HZ/100V				1				
8B	2	982515-60090	AMMETER(50/60HZ/100V				1				
8C	2	982515-60090	AMMETER(50/60HZ/100V				1				
8D	2	982515-60090	AMMETER(50/60HZ/100V				1				
8E	2	982515-60070	AMMETER				1				
8F	2	982515-60070	AMMETER				1				
8G	2	982515-60060	AMMETER				1				
8H	2	982515-60060	AMMETER				1				
8I	2	982515-60150	AMMETER(60HZ110/220V				1				
8J	2	982515-60140	AMMETER				1				
8K	2	982515-60070	AMMETER				1				
8L	2	982515-60070	AMMETER				1				
8M	2	982515-60070	AMMETER				1				
8N	2	982515-60150	AMMETER(60HZ110/220V				1				
8O	2	982515-60150	AMMETER(60HZ110/220V				1				
8P	2	982515-60150	AMMETER(60HZ110/220V				1				
9A	2	982510-50010	VOLTMETER	1	1	1	1				
9B	2	982510-50010	VOLTMETER	1	1	1	1				
9C	2	982510-50010	VOLTMETER	1	1	1	1				
9D	2	982510-50010	VOLTMETER	1	1	1	1				
9E	2	982510-50040	VOLTMETER (200V)	1	1	1	1				
9F	2	982510-50040	VOLTMETER (200V)	1	1	1	1				
9G	2	982510-50040	VOLTMETER (200V)	1	1	1	1				
9H	2	982510-50040	VOLTMETER (200V)	1	1	1	1				
9I	2	982510-50080	VOLTMETER	1	1	1	1				
10A	2	982510-80220	METER, FREQUENCY	1	1	1	1				
10B	2	982510-80220	METER, FREQUENCY	1	1	1	1				
10C	2	982510-80220	METER, FREQUENCY	1	1	1	1				
10D	2	982510-80220	METER, FREQUENCY	1	1	1	1				
10E	2	982510-80056	METER, FREQUENCY	1	1	1	1				
10F	2	982510-80056	METER, FREQUENCY	1	1	1	1				
10G	2	982510-80056	METER, FREQUENCY	1	1	1	1				
10H	2	982510-80056	METER, FREQUENCY	1	1	1	1				
10I	2	982510-80220	METER, FREQUENCY	1	1	1	1				
11A	2	982511-60010	LAMP	1	1	1	1				
11B	2	982511-60010	LAMP	1	1	1	1				
11C	2	982511-60010	LAMP	1	1	1	1				
11D	2	982511-60010	LAMP	1	1	1	1				
11E	2	982511-60020	LAMP	1	1	1	1				
11F	2	982511-60020	LAMP	1	1	1	1				
11G	2	982511-60020	LAMP	1	1	1	1				
11H	2	982511-60020	LAMP	1	1	1	1				
11I	2	982511-60010	LAMP	1	1	1	1				
12	2	982511-90020	KNOB	1	1	1	1				
13A	2	982513-80130	TERMINAL	2	2						
13B	2	982513-80130	TERMINAL	2	2						
13C	2	982513-80130	TERMINAL	2	2						
13D	2	982513-80130	TERMINAL	2	2						
13E	2	982513-80040	TERMINAL	2	2						
13F	2	982513-80040	TERMINAL	2	2						
13G	2	982513-80040	TERMINAL	2	2						

N:Old ←Yes/No→ New. Q:Old ←No/Yes→ New. R:Old ←Yes/Yes→ New. S:Old ←No/No→ New. W:Add. Z:Discontinued. F:Interchangeable by set. K:Q'ty Change

++ CONTINUE ++

Copyright (C) YANMAR GLOBAL CS CO., LTD. All RightsReserved.

Fig.89. INSTRUMENT PANEL

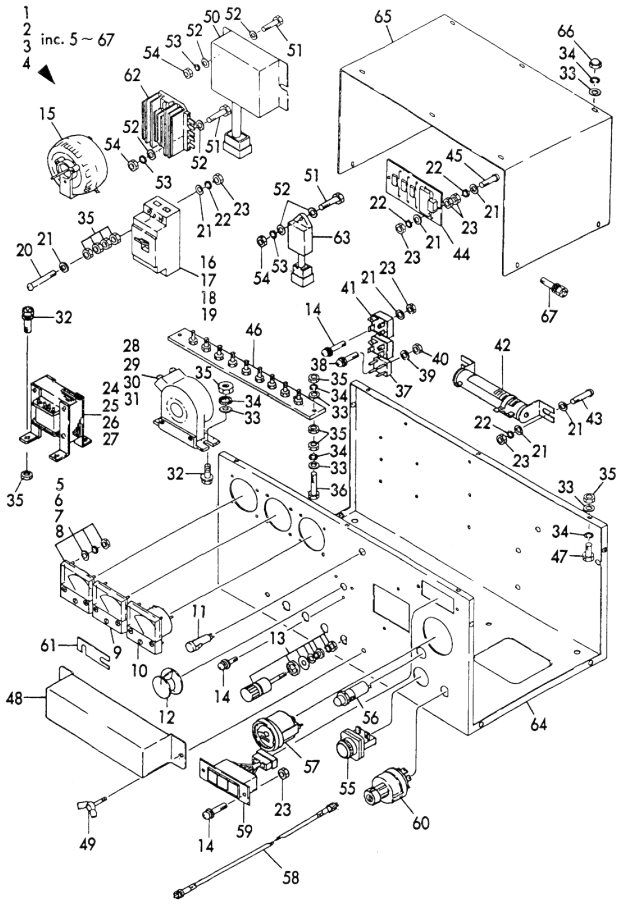

(A)=YEG8HS-BS
(B)=YEG10HS-BS
(C)=YEG20HS-BS
(D)=YEG24HS-BS
(E)=
(F)=

No.	Lev.	Parts No.	Description	Q'ty (A)	(B)	(C)	(D)	(E)	(F)	I	R
13H	2	982513-80040	TERMINAL	2	2						
13I	2	982513-80040	TERMINAL	4	4						
13J	2	982513-80090	TERMINAL			2	2				
13K	2	982513-80090	TERMINAL			2	2				
13L	2	982513-80090	TERMINAL			2	2				
13M	2	982513-80090	TERMINAL			2	2				
13N	2	982513-80130	TERMINAL			2	2				
13O	2	982513-80130	TERMINAL			2	2				
13P	2	982513-80130	TERMINAL			2	2				
13Q	2	982513-80130	TERMINAL			2	2				
13R	2	982513-80130	TERMINAL			4	4				
14	2	982343-04015	SCREW M 4X15	7	7	7	7				
15	2	982511-00020	REGULATOR, VOLTAGE	1	1	1	1				
16A	2	982512-40511	SWITCH	1							
16B	2	982512-40521	SWITCH, MAIN 50A	1							
16C	2	982512-40521	SWITCH, MAIN 50A	1							
16D	2	982512-40521	SWITCH, MAIN 50A	1							
16E	2	982512-40511	SWITCH	1							
16F	2	982512-40511	SWITCH	1							
16G	2	982512-40511	SWITCH	1							
16H	2	982512-40511	SWITCH	1							
16I	2	982512-40511	SWITCH	1							
16J	2	982512-40511	SWITCH	1							
17A	2	982512-40531	SWITCH		1						
17B	2	982512-40521	SWITCH, MAIN 50A		1						
17C	2	982512-40521	SWITCH, MAIN 50A		1						
17D	2	982512-40531	SWITCH		1						
17E	2	982512-40531	SWITCH		1						
17F	2	982512-40531	SWITCH		1						
17G	2	982512-40531	SWITCH		1						
17H	2	982512-40531	SWITCH		1						
17I	2	982512-40531	SWITCH		1						
17J	2	982512-40521	SWITCH, MAIN 50A		1						
17K	2	982512-40521	SWITCH, MAIN 50A		1						
17L	2	982512-40521	SWITCH, MAIN 50A		1						
18A	2	982512-40751	SWITCH, 50HZ/100V			1					
18B	2	982512-40751	SWITCH, 50HZ/100V			1					
18C	2	982512-40751	SWITCH, 50HZ/100V			1					
18D	2	982512-40751	SWITCH, 50HZ/100V			1					
18E	2	982512-40751	SWITCH, 50HZ/100V			1					
18F	2	982512-40741	SWITCH, 50HZ/230V			1					
18G	2	982512-40741	SWITCH, 50HZ/230V			1					
18H	2	982512-40741	SWITCH, 50HZ/230V			1					
18I	2	982512-40751	SWITCH, 50HZ/100V			1					
19A	2	982512-40761	M,SWITCH(60HZ/ALL)				1				
19B	2	982512-40761	M,SWITCH(60HZ/ALL)				1				
19C	2	982512-40761	M,SWITCH(60HZ/ALL)				1				
19D	2	982512-40761	M,SWITCH(60HZ/ALL)				1				
19E	2	982512-40761	M,SWITCH(60HZ/ALL)				1				
19F	2	982512-40751	SWITCH, 50HZ/100V				1				
19G	2	982512-40751	SWITCH, 50HZ/100V				1				

N:Old ←Yes/No→ New. Q:Old ←No/Yes→ New. R:Old ←Yes/Yes→ New. S:Old ←No/No→ New. W:Add. Z:Discontinued. F:Interchangeable by set. K:Q'ty Change

++ CONTINUE ++

Copyright (C) YANMAR GLOBAL CS CO., LTD. All RightsReserved.

Fig.89. INSTRUMENT PANEL

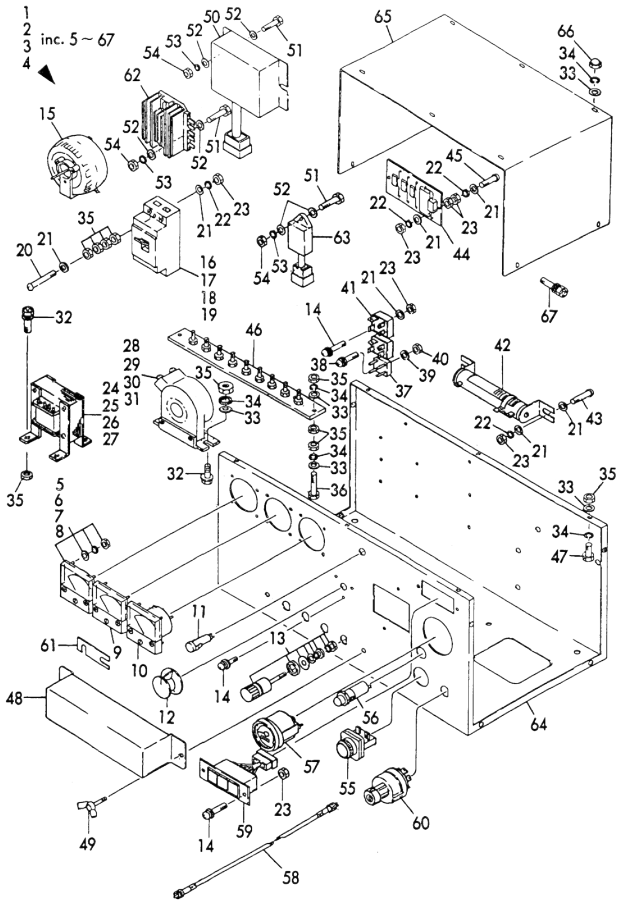

(A)=YEG8HS-BS
(B)=YEG10HS-BS
(C)=YEG20HS-BS
(D)=YEG24HS-BS
(E)=
(F)=

No.	Lev.	Parts No.	Description	Q'ty (A)	(B)	(C)	(D)	(E)	(F)	I	R
19H	2	982512-40751	SWITCH, 50HZ/100V				1				
19I	2	982512-40761	M,SWITCH(60HZ/ALL)				1				
20	2	982330-00480	SCREW	2	2	2	2				
21	2	22117-040000	WASHER, 4	14	14	18	18				
22	2	22217-040000	WASHER, SPRING 4	12	12	16	16				
23	2	26716-040002	NUT, M4	10	10	12	12				
24A	2	982515-90010	CUR,TRANS(50HZ/100V)	1							
24B	2	982515-90020	CUR,TRANS(50HZ/110V)	1							
24C	2	982515-90030	CUR,TRANS(50HZ/200V)	1							
24D	2	982515-90040	CUR,TRANS(50HZ/220V)	1							
24E	2	982515-90050	CUR,TRANS(50HZ/230V)	1							
24F	2	982515-90060	CUR,TRANS(50HZ/240V)	1							
24G	2	982515-90070	CUR,TRANS(50HZ110/22	1							
24H	2	982515-90080	CUR,TRANS(50HZ115/23	1							
24I	2	982515-90090	CUR,TRANS(60HZ/110V)	1							
24J	2	982515-90100	CUR,TRANS(60HZ/115V)	1							
24K	2	982515-90110	CUR,TRANS(60HZ/120V)	1							
24L	2	982515-90120	CUR,TRANS(60HZ/220V)	1							
24M	2	982515-90130	CUR,TRANS(60HZ/230V)	1							
24N	2	982515-90140	CUR,TRANS(60HZ/240V)	1							
24O	2	982515-90150	CUR,TRANS(60HZ110/22	1							
24P	2	982515-90160	CUR,TRANS(60HZ115/23	1							
24Q	2	982515-90170	CUR,TRANS(60HZ120/24	1							
25A	2	982515-90180	CUR,TRANS(50HZ/100V)		1						
25B	2	982515-90190	CUR,TRANS(50HZ/110V)		1						
25C	2	982515-90200	CUR,TRANS(50HZ/200V)		1						
25D	2	982515-90210	CUR,TRANS(50HZ/220V)		1						
25E	2	982515-90220	CUR,TRANS(50HZ/230V)		1						
25F	2	982515-90230	CUR,TRANS(50HZ/240V)		1						
25G	2	982515-90240	CUR,TRANS(50HZ110/22		1						
25H	2	982515-90250	CUR,TRANS(50HZ115/23		1						
25I	2	982515-90260	CUR,TRANS(60HZ/110V)		1						
25J	2	982515-90270	CUR,TRANS(60HZ/115V)		1						
25K	2	982515-90280	CUR,TRANS(60HZ/120V)		1						
25L	2	982515-90290	CUR,TRANS(60HZ/220V)		1						
25M	2	982515-90300	CUR,TRANS(60HZ/230V)		1						
25N	2	982515-90310	CUR,TRANS(60HZ/240V)		1						
25O	2	982515-90320	CUR,TRANS(60HZ110/22		1						
25P	2	982515-90330	CUR,TRANS(60HZ115/23		1						
25Q	2	982515-90340	CUR,TRANS(60HZ120/24		1						
26A	2	982515-90350	CUR,TRANS(50HZ/100V)			1					
26B	2	982515-90360	CUR,TRANS(50HZ/110V)			1					
26C	2	982515-90370	CUR,TRANS(50HZ/200V)			1					
26D	2	982515-90380	CUR,TRANS(50HZ/220V)			1					
26E	2	982515-90390	CUR,TRANS(50HZ/230V)			1					
26F	2	982515-90400	CUR,TRANS(50HZ/240V)			1					
26G	2	982515-90410	CUR,TRANS(50HZ110/22			1					
26H	2	982515-90420	CUR,TRANS(50HZ115/23			1					
26I	2	982515-90430	CUR,TRANS(60HZ/110V)			1					
26J	2	982515-90440	CUR,TRANS(60HZ/115V)			1					
26K	2	982515-90450	CUR,TRANS(60HZ/120V)			1					

N:Old ←Yes/No→ New. Q:Old ←No/Yes→ New. R:Old ←Yes/Yes→ New. S:Old ←No/No→ New. W:Add. Z:Discontinued. F:Interchangeable by set. K:Q'ty Change

++ CONTINUE ++

Copyright (C) YANMAR GLOBAL CS CO., LTD. All RightsReserved.

Fig.89. INSTRUMENT PANEL

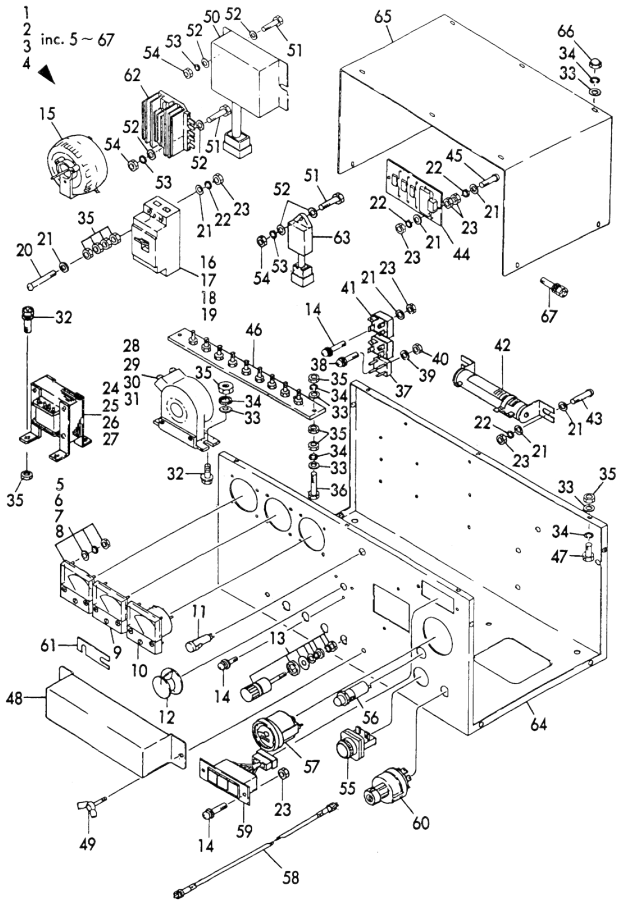

(A)=YEG8HS-BS
(B)=YEG10HS-BS
(C)=YEG20HS-BS
(D)=YEG24HS-BS
(E)=
(F)=

No.	Lev.	Parts No.	Description	Q'ty (A)	(B)	(C)	(D)	(E)	(F)	I	R
26L	2	982515-90460	CUR,TRANS(60HZ/220V)			1					
26M	2	982515-90470	CUR,TRANS(60HZ/230V)			1					
26N	2	982515-90480	CUR,TRANS(60HZ/240V)			1					
26O	2	982515-90490	CUR,TRANS(60HZ110/22			1					
26P	2	982515-90500	CUR,TRANS(60HZ115/23			1					
26Q	2	982515-90510	CUR,TRANS(60HZ120/24			1					
27A	2	982515-90520	CUR,TRANS(50HZ/100V)				1				
27B	2	982515-90530	CUR,TRANS(50HZ/110V)				1				
27C	2	982515-90540	CUR,TRANS(50HZ/200V)				1				
27D	2	982515-90550	CUR,TRANS(50HZ/220V)				1				
27E	2	982515-90560	CUR,TRANS(50HZ/230V)				1				
27F	2	982515-90570	CUR,TRANS(50HZ/240V)				1				
27G	2	982515-90580	CUR,TRANS(50HZ110/22				1				
27H	2	982515-90590	CUR,TRANS(50HZ115/23				1				
27I	2	982515-90600	CUR,TRANS(60HZ/110V)				1				
27J	2	982515-90610	CUR,TRANS(60HZ/115V)				1				
27K	2	982515-90620	CUR,TRANS(60HZ/120V)				1				
27L	2	982515-90630	CUR,TRANS(60HZ/220V)				1				
27M	2	982515-90640	CUR,TRANS(60HZ/230V)				1				
27N	2	982515-90650	CUR,TRANS(60HZ/240V)				1				
27O	2	982515-90660	CUR,TRANS(60HZ110/22				1				
27P	2	982515-90670	CUR,TRANS(60HZ115/23				1				
27Q	2	982515-90680	CUR,TRANS(60HZ120/24				1				
28A	2	982513-90070	TRANSFORMER	1							
28B	2	982513-90080	TRANSFORMER	1							
28C	2	982513-90070	TRANSFORMER	1							
28D	2	982513-90070	TRANSFORMER	1							
28E	2	982513-90070	TRANSFORMER	1							
28F	2	982513-90070	TRANSFORMER	1							
28G	2	982513-90070	TRANSFORMER	1							
28H	2	982513-90070	TRANSFORMER	1							
28I	2	982513-90080	TRANSFORMER	1							
29A	2	982513-90080	TRANSFORMER		1						
29B	2	982513-90080	TRANSFORMER		1						
29C	2	982513-90070	TRANSFORMER		1						
29D	2	982513-90070	TRANSFORMER		1						
29E	2	982513-90070	TRANSFORMER		1						
29F	2	982513-90070	TRANSFORMER		1						
29G	2	982513-90070	TRANSFORMER		1						
29H	2	982513-90070	TRANSFORMER		1						
29I	2	982513-90080	TRANSFORMER		1						
29J	2	982513-90080	TRANSFORMER		1						
29K	2	982513-90080	TRANSFORMER		1						
29L	2	982513-90080	TRANSFORMER		1						
29M	2	982513-90070	TRANSFORMER		1						
29N	2	982513-90070	TRANSFORMER		1						
29O	2	982513-90080	TRANSFORMER		1						
29P	2	982513-90080	TRANSFORMER		1						
29Q	2	982513-90070	TRANSFORMER		1						
30A	2	982513-90150	TRANSFORMER			1					
30B	2	982513-90150	TRANSFORMER			1					

N:Old ←Yes/No→ New. Q:Old ←No/Yes→ New. R:Old ←Yes/Yes→ New. S:Old ←No/No→ New. W:Add. Z:Discontinued. F:Interchangeable by set. K:Q'ty Change

++ CONTINUE ++

Copyright (C) YANMAR GLOBAL CS CO., LTD. All RightsReserved.

Fig.89. INSTRUMENT PANEL

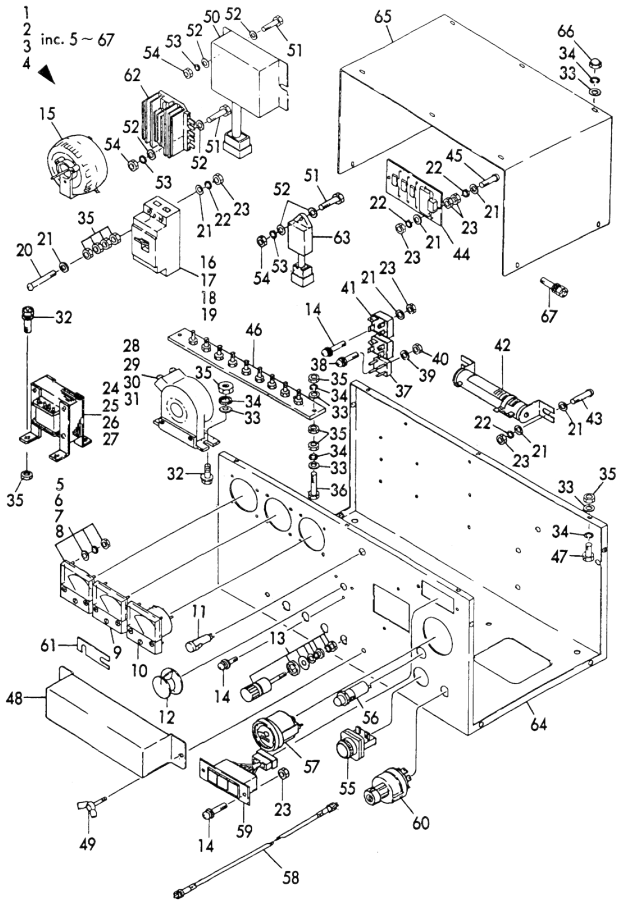

(A)=YEG8HS-BS
(B)=YEG10HS-BS
(C)=YEG20HS-BS
(D)=YEG24HS-BS
(E)=
(F)=

No.	Lev.	Parts No.	Description	Q'ty (A)	(B)	(C)	(D)	(E)	(F)	I	R
30C	2	982513-90150	TRANSFORMER			1					
30D	2	982513-90150	TRANSFORMER			1					
30E	2	982513-90070	TRANSFORMER			1					
30F	2	982513-90070	TRANSFORMER			1					
30G	2	982513-90080	TRANSFORMER			1					
30H	2	982513-90080	TRANSFORMER			1					
30I	2	982513-90070	TRANSFORMER			1					
30J	2	982513-90080	TRANSFORMER			1					
30K	2	982513-90070	TRANSFORMER			1					
30L	2	982513-90070	TRANSFORMER			1					
30M	2	982513-90070	TRANSFORMER			1					
30N	2	982513-90070	TRANSFORMER			1					
30O	2	982513-90070	TRANSFORMER			1					
30P	2	982513-90070	TRANSFORMER			1					
31A	2	982513-90160	TRANSMITTER, 200-220				1				
31B	2	982513-90160	TRANSMITTER, 200-220				1				
31C	2	982513-90160	TRANSMITTER, 200-220				1				
31D	2	982513-90160	TRANSMITTER, 200-220				1				
31E	2	982513-90080	TRANSFORMER				1				
31F	2	982513-90080	TRANSFORMER				1				
31G	2	982513-90070	TRANSFORMER				1				
31H	2	982513-90070	TRANSFORMER				1				
31I	2	982513-90080	TRANSFORMER				1				
31J	2	982513-90070	TRANSFORMER				1				
31K	2	982513-90080	TRANSFORMER				1				
31L	2	982513-90080	TRANSFORMER				1				
31M	2	982513-90080	TRANSFORMER				1				
31N	2	982513-90080	TRANSFORMER				1				
31O	2	982513-90080	TRANSFORMER				1				
31P	2	982513-90080	TRANSFORMER				1				
32	2	982343-05014	BOLT, M5X14	6	6	6	6				
33	2	22117-050000	WASHER, 5	26	26	26	26				
34	2	22217-050000	WASHER, SPRING 5	22	22	22	22				
35	2	26716-050002	NUT, M5	24	24	24	24				
36	2	26116-050502	BOLT, M5X 50 PLATED	2	2	2	2				
37	2	982513-10060	RECTIFIER	1	1	1	1				
38	2	982343-03015	SCREW, M3X15	1	1	1	1				
39	2	982030-10300	WASHER 3	1	1	1	1				
40	2	982023-10300	NUT M3	1	1	1	1				
41	2	982513-10050	RECTIFIER	1	1	1	1				
42	2	982511-10040	RESISTOR 60W-10	1	1	1	1				
43	2	26557-040122	SCREW, M4X12	2	2	2	2				
44	2	982513-70150	SURGE ABSORBER	1	1	1	1				
45	2	26557-040122	SCREW, M4X12	2	2	2	2				
46A	2	982511-50560	TAP,TERMINAL(SINGLEV	1	1	1	1				
46B	2	982511-50570	TAP,TERMINAL(DUAL V)	1	1	1	1				
47	2	26116-050152	BOLT M 5X 15 PLATED	6	6	6	6				
48A	2	982518-60240	GUARD	1	1						
48B	2	982518-60270	TERMINAL GUARD			1	1				
49	2	982317-00070	BOLT	2	2	2	2				
50	2	982514-00040	RELAY	1	1	1	1				

N:Old ←Yes/No→ New. Q:Old ←No/Yes→ New. R:Old ←Yes/Yes→ New. S:Old ←No/No→ New. W:Add. Z:Discontinued. F:Interchangeable by set. K:Q'ty Change

++ CONTINUE ++

Copyright (C) YANMAR GLOBAL CS CO., LTD. All RightsReserved.

Fig.89. INSTRUMENT PANEL

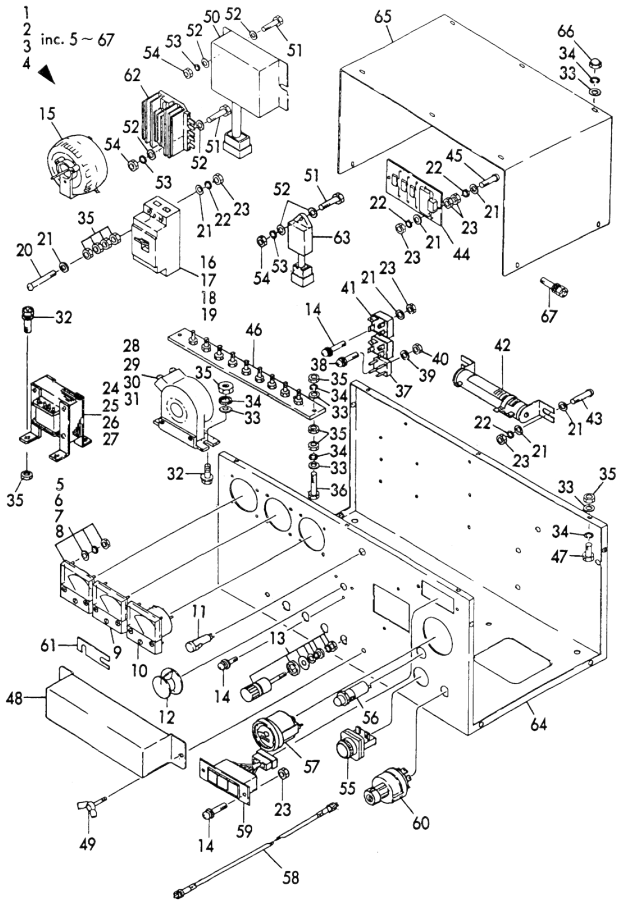

(A)=YEG8HS-BS
(B)=YEG10HS-BS
(C)=YEG20HS-BS
(D)=YEG24HS-BS
(E)=
(F)=

No.	Lev.	Parts No.	Description	Q'ty (A)	(B)	(C)	(D)	(E)	(F)	I	R
51	2	26116-060252	BOLT, M6X 25 PLATED	5	5	5	5				
52	2	22117-060000	WASHER, 6	10	10	10	10				
53	2	22217-060000	WASHER, SPRING 6	5	5	5	5				
54	2	26756-060002	NUT, LOCK M6	7	7	7	7				
55	2	982517-70100	SWITCH	1	1	1	1				
56	2	124559-99791	LAMP, PILOT	1	1	1	1				
57	2	171080-91100	TACHOMETER	1	1	1	1				
58A	2	194145-56901	CABLE ASSY, METER	1	1	1					
58B	2	42130-502220	CABLE, TACHOMETER				1				
59	2	170038-91310	LAMP	1	1	1	1				
60	2	171400-91251	SWITCH, STARTER	1	1	1	1				
61A	2	982513-80410	CONNECTOR	2	2						
61B	2	982513-80420	CONNECTOR			2	2				
62	2	119660-77710	LIMITER, CURRENT 15A	1	1	1	1				
63	2	124559-77971	LAMP, PILOT	1	1	1	1				
64A	2	982515-70845	PANEL.B 5.60HZSINGLE	1							
64B	2	982515-70855	PANEL.B 5.60HZDUAL V	1							
64C	2	982515-70865	PANEL, B 50HZ/100V		1						
64D	2	982515-70875	PANEL,B 50HZ110-240V		1						
64E	2	982515-70885	PANEL, B 50HZ/DUAL V		1						
64F	2	982515-70895	PANEL, B 60HZ/110V		1						
64G	2	982515-70895	PANEL, B 60HZ/110V		1						
64H	2	982515-70905	PANEL, B 60HZ/220V		1						
64I	2	982515-70905	PANEL, B 60HZ/220V		1						
64J	2	982515-70915	PANEL, B 60HZ/120V		1						
64K	2	982515-70915	PANEL, B 60HZ/120V		1						
64L	2	982515-70925	PANEL,B 60HZ110/220V		1						
64M	2	982515-70925	PANEL,B 60HZ110/220V		1						
64N	2	982515-70935	PANEL, B 60HZ/120V		1						
64O	2	982515-70935	PANEL, B 60HZ/120V		1						
64P	2	982515-70945	PANEL.B 5.60HZ100-12			1					
64Q	2	982515-70955	PANEL.B 5.60HZ200-24			1					
64R	2	982515-70965	PANEL.B 5.60HZDUAL V			1					
64S	2	982515-70975	PANEL.B 5.60HZ100-12				1				
64T	2	982515-70985	PANEL,B 50HZ/200-220				1				
64U	2	982515-70995	PANEL,B 50HZ/230-240				1				
64V	2	982515-71005	PANEL,B 50HZ/110/220				1				
64W	2	982515-71015	PANEL,B 50HZ/115/230				1				
64X	2	982515-71025	PANEL,B 60HZ/200-240				1				
64Y	2	982515-71035	PANEL, B 60HZ/DUAL V				1				
65	2	982515-80320	COVER, PANEL	1	1	1	1				
66	2	982036-05002	CAP NUT M 5	6	6	6	6				
67	2	982343-05014	BOLT, M5X14	4	4	4	4				

N:Old ←Yes/No→ New. Q:Old ←No/Yes→ New. R:Old ←Yes/Yes→ New. S:Old ←No/No→ New. W:Add. Z:Discontinued. F:Interchangeable by set. K:Q'ty Change

Copyright (C) YANMAR GLOBAL CS CO., LTD. All RightsReserved.

Fig.90. BONNET (YEG8HS/10HS)

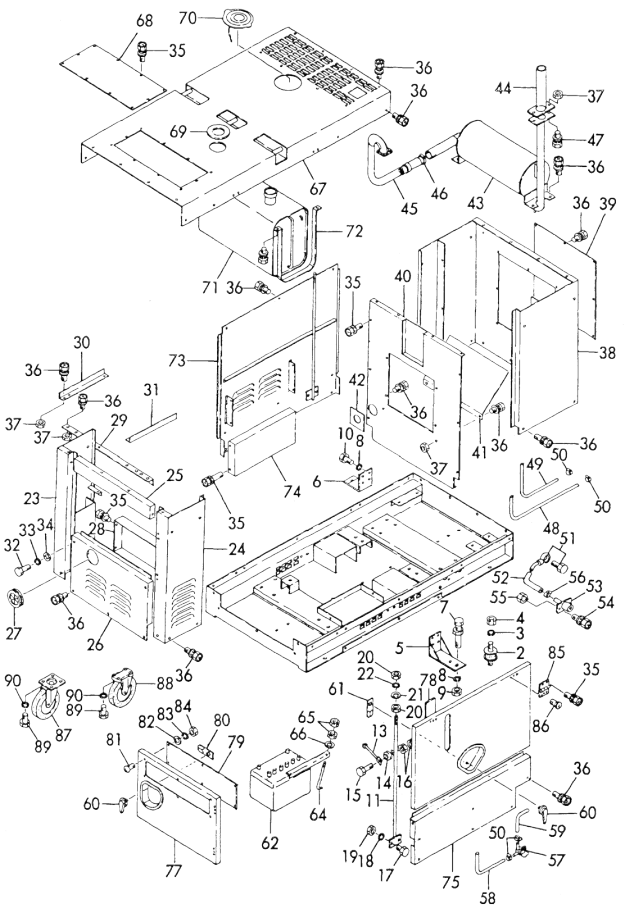

(A)=YEG8HS-BS
(B)=YEG10HS-BS
(C)=YEG20HS-BS
(D)=YEG24HS-BS
(E)=
(F)=

No.	Lev.	Parts No.	Description	Q'ty (A)	(B)	(C)	(D)	(E)	(F)	I	R
1A	1	982215-20261	COMMON BED	1							
1B	1	982215-20262	COMMON BED		1						
2	1	982219-00460	RUBBER, CUSHION	4	4						
3	1	22217-100000	WASHER, SPRING 10	8	8						
4	1	26716-100002	NUT, M10	8	8						
5	1	982215-20263	MOUNT	1	1						
6	1	982215-20264	MOUNT	1	1						
7	1	26117-100704	BOLT M10X 70 PLATED	2	2						
8	1	22217-100000	WASHER, SPRING 10	10	10						
9	1	26716-100002	NUT, M10	4	4						
10	1	26112-100254	BOLT M10X 25	8	8						
11	1	982215-20265	BOLT, M12	1	1						
12	1	982215-20266	BOLT, M12	1	1						
13	1	982701-10610	ARM	1	1						
14	1	982590-00010	BUSH	1	1						
15	1	26117-060504	BOLT M 6X 50 PLATED	1	1						
16	1	26716-060002	NUT, M6	1	1						
17	1	26117-100304	BOLT M10X 30 PLATED	4	4						
18	1	22217-100000	WASHER, SPRING 10	4	4						
19	1	26716-100002	NUT, M10	4	4						
20	1	26716-120002	NUT, M12	4	4						
21	1	22117-120000	WASHER, 12	2	2						
22	1	22217-120000	WASHER, SPRING 12	2	2						
23	1	982215-20267	COVER	1	1						
24	1	982215-20269	COVER	1	1						
25	1	982215-20270	COVER	1	1						
26	1	982514-70540	GROMMET	1	1						
27	1	982215-20271	DUCT	1	1						
28	1	982215-20272	BRACKET	1	1						
29	1	982215-20273	BRACKET	1	1						
30	1	982215-20274	BRACKET	1	1						
31	1	26117-080504	BOLT M 8X 50 PLATED	2	2						
32	1	22117-080000	WASHER, 8	2	2						
33	1	22217-080000	WASHER, SPRING 8	2	2						
34	1	26014-050169	BOLT M 5X 16	28	28						
35	1	26014-080209	BOLT, M8X 20	76	76						
36	1	26716-080002	NUT, M8	8	8						
37	1	982215-20275	PANEL	1	1						
38	1	982215-20276	PLATE	1	1						
39A	1	982215-20277	PARTITION	1							
39B	1	982215-20278	PARTITION		1						
40	1	982215-20279	SHIELD	1	1						
41	1	982277-00090	GASKET	1	1						
42	1	982275-00310	SILENCER	1	1						
43	1	982275-00360	TAIL	1	1						
44A	1	982276-00240	PIPE, FLEXIBLE	1							
44B	1	982276-00250	PIPE, FLEXIBLE		1						
45	1	982277-00040	CLAMP,EXH.	1	1						
46	1	26014-080309	BOLT, M8X 30	2	2						
47	1	982283-00280	HOSE, FUEL	1	1						
48	1	982283-00290	HOSE, FUEL	1	1						

N:Old ←Yes/No→ New. Q:Old ←No/Yes→ New. R:Old ←Yes/Yes→ New. S:Old ←No/No→ New. W:Add. Z:Discontinued. F:Interchangeable by set. K:Q'ty Change

++ CONTINUE ++

Copyright (C) YANMAR GLOBAL CS CO., LTD. All RightsReserved.

Fig.90. BONNET (YEG8HS/10HS)

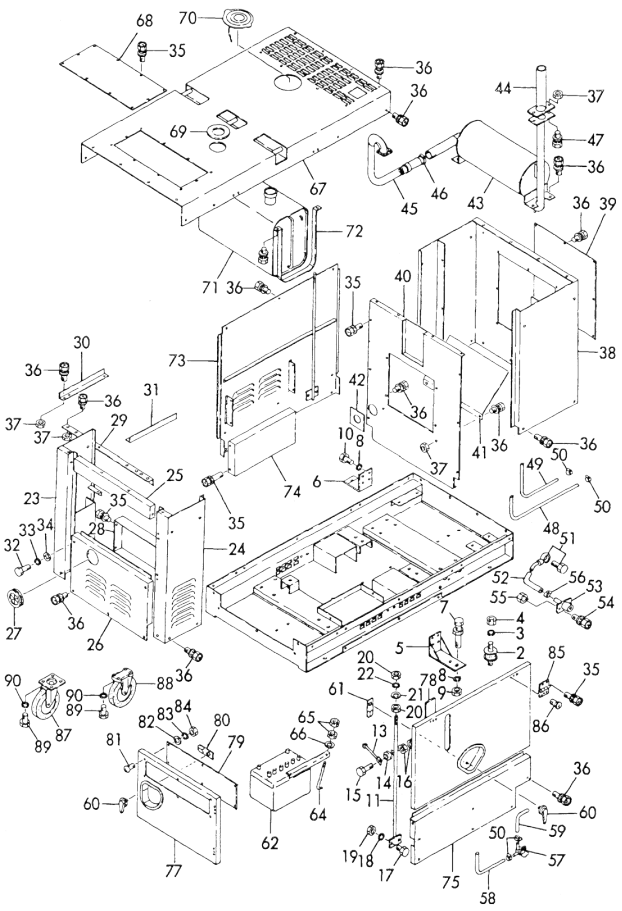

(A)=YEG8HS-BS
(B)=YEG10HS-BS
(C)=YEG20HS-BS
(D)=YEG24HS-BS
(E)=
(F)=

No.	Lev.	Parts No.	Description	Q'ty (A)	(B)	(C)	(D)	(E)	(F)	I	R
49	1	982284-00016	CLAMP	4	4						
50A	1	982217-30020	JOINT	1							
50B	1	982217-30220	JOINT		1						
51A	1	982283-00220	HOSE, OIL	1							
51B	1	982283-00230	HOSE, OIL		1						
52	1	982217-30050	DRAIN	1	1						
53	1	26014-060169	BOLT, M6X 16	2	2						
54	1	26716-060002	NUT, M6	2	2						
55	1	982284-00025	CLIP	2	2						
56	1	129150-49100	COCK ASSY, 3-WAY	1	1						
57	1	982283-00390	HOSE, WATER	1	1						
58	1	982283-00380	HOSE, WATER	1	1						
59	1	982287-00010	HANDLE	2	2						
60	1	982287-00130	LEVER A	1	1						
61	1	982217-00030	BATTERY	1	1						
62	1	982212-30050	HOLDER	1	1						
63	1	982212-30070	CLAMP	2	2						
64	1	26716-060002	NUT, M6	4	4						
65	1	22117-060000	WASHER, 6	2	2						
66	1	982215-20280	COVER	1	1						
67	1	982215-20281	PLATE	1	1						
68	1	982217-90210	CAP	1	1						
69	1	982701-10710	CAP, RUBBER	1	1						
70	1	982217-90570	FUEL TANK	1	1						
71	1	982218-00210	BAND	2	2						
72	1	982215-20282	COVER	1	1						
73	1	982215-20283	DUCT	1	1						
74	1	982215-20284	COVER	1	1						
75	1	982215-20285	DOOR	1	1						
76	1	982215-20286	DOOR	1	1						
77	1	982215-20287	HOLE, CHECKING A	1	1						
78	1	982215-20288	HOLE, CHECKING B	1	1						
79	1	982287-00120	LEVER	1	1						
80	1	982332-56016	SCREW	6	6						
81	1	982242-26000	WASHER	6	6						
82	1	982242-46000	WASHER	6	6						
83	1	26713-060002	NUT, M6	6	6						
84	1	982286-00060	HINGE	4	4						
85	1	982332-55016	SCREW, M5X16	12	12						
86	1	982219-10060	WHEEL 200DX155W	2	2						
87	1	982219-10010	WHEEL	2	2						
88	1	26117-100204	BOLT, M10X 20 PLATED	16	16						
89	1	22217-100000	WASHER, SPRING 10	16	16						

N:Old ←Yes/No→ New. Q:Old ←No/Yes→ New. R:Old ←Yes/Yes→ New. S:Old ←No/No→ New. W:Add. Z:Discontinued. F:Interchangeable by set. K:Q'ty Change

Copyright (C) YANMAR GLOBAL CS CO., LTD. All RightsReserved.

Fig.91. BONNET (YEG20HS/24HS)

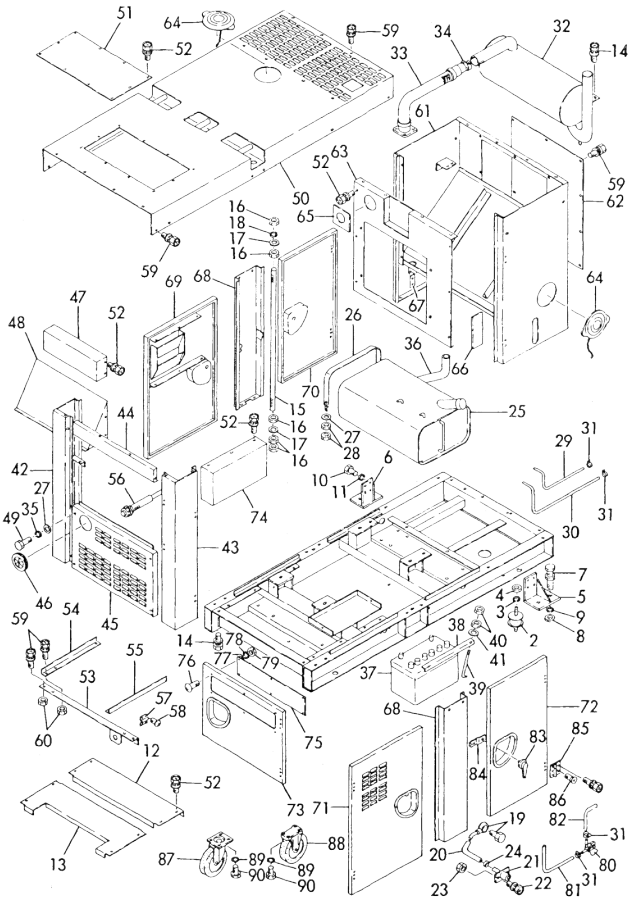

(A)=YEG8HS-BS (D)=YEG24HS-BS
(B)=YEG10HS-BS (E)=
(C)=YEG20HS-BS (F)=

No.	Lev.	Parts No.	Description	Q'ty (A)	(B)	(C)	(D)	(E)	(F)	I	R
1A	1	982215-20289	COMMON BED			1					
1B	1	982215-20290	COMMON BED				1				
2	1	982219-00110	RUBBER, CUSHION			4	4				
3	1	22217-120000	WASHER, SPRING 12			8	8				
4	1	26716-120002	NUT, M12			8	8				
5	1	982215-20294	MOUNT			1	1				
6	1	982215-20295	MOUNT			1	1				
7	1	26117-120904	BOLT, M12X 90 PLATED			2	2				
8	1	26716-120002	NUT, M12			4	4				
9	1	22217-120000	WASHER, SPRING 12			2	2				
10	1	26112-100254	BOLT M10X 25			8	8				
11	1	22217-100000	WASHER, SPRING 10			8	8				
12A	1	982215-20296	DUCT			1					
12B	1	982215-20297	DUCT				1				
13A	1	982215-20298	DUCT			1					
13B	1	982215-20300	DUCT				1				
14	1	26014-080259	BOLT M 8X 25			22	22				
15	1	982215-20301	BOLT			2	2				
16	1	26716-160002	NUT, M16			10	10				
17	1	22117-160000	WASHER, 16			4	4				
18	1	22217-160000	WASHER, SPRING 16			2	2				
19	1	982217-30220	JOINT			1	1				
20A	1	982283-00240	HOSE, OIL			1					
20B	1	982283-00250	HOSE,OIL				1				
21	1	982217-30050	DRAIN			1	1				
22	1	26014-060169	BOLT, M6X 16			2	2				
23	1	26716-060002	NUT, M6			2	2				
24	1	982284-00025	CLIP			1	1				
25	1	982217-90580	TANK, FUEL			1	1				
26	1	982218-00190	BAND			2	2				
27	1	22117-080000	WASHER, 8			8	8				
28	1	26716-080002	NUT, M8			8	8				
29A	1	982283-00300	HOSE, FUEL			1					
29B	1	982283-00320	HOSE, FUEL				1				
30A	1	982283-00310	HOSE, FUEL			1					
30B	1	982283-00330	HOSE, FUEL				1				
31	1	982284-00016	CLAMP			4	4				
32	1	982275-00320	SILENCER			1	1				
33A	1	982276-00260	PIPE, FLEXIBLE			1					
33B	1	982276-00270	PIPE, FLEXIBLE				1				
34	1	982277-00050	CLAMP			1	1				
35	1	22217-080000	WASHER, SPRING 8			4	4				
36	1	982283-00440	HOSE			1	1				
37	1	982217-00040	BATTERY			1	1				
38	1	982212-30070	CLAMP			2	2				
39	1	982212-30080	BOLT			2	2				
40	1	26716-060002	NUT, M6			4	4				
41	1	22117-060000	WASHER, 6			2	2				
42	1	982215-20302	COVER			1	1				
43	1	982215-20303	COVER			1	1				
44	1	982215-20304	COVER			1	1				

N:Old $\frac{\text{Yes}}{\text{No}}$ New. Q:Old $\frac{\text{No}}{\text{Yes}}$ New. R:Old $\frac{\text{Yes}}{\text{Yes}}$ New. S:Old $\frac{\text{No}}{\text{No}}$ New. W:Add. Z:Discontinued. F:Interchangeable by set. K:Q'ty Change

++ CONTINUE ++

Copyright (C) YANMAR GLOBAL CS CO., LTD. All RightsReserved.

Fig.91. BONNET (YEG20HS/24HS)

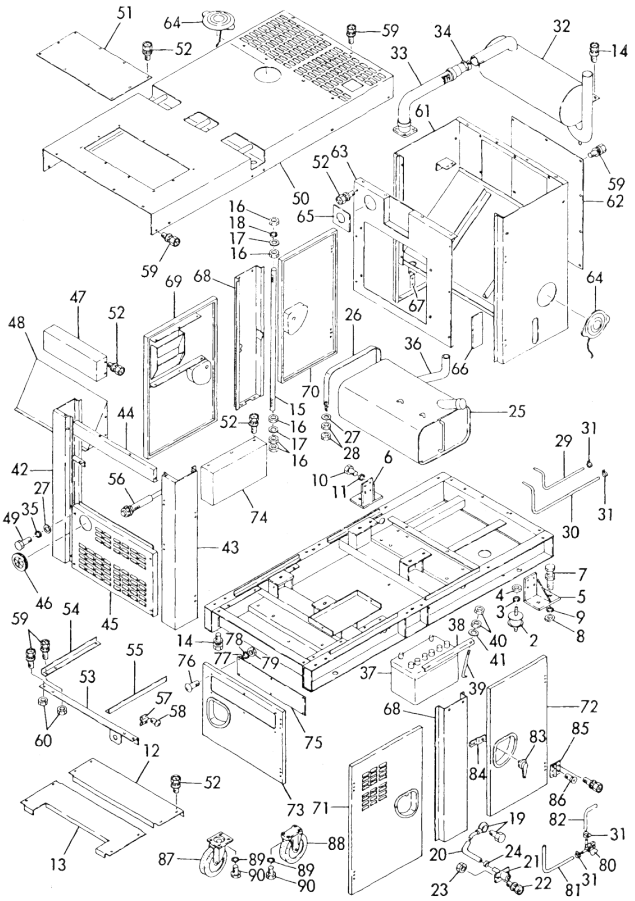

(A)=YEG8HS-BS (B)=YEG10HS-BS (C)=YEG20HS-BS (D)=YEG24HS-BS (E)= (F)=

No.	Lev.	Parts No.	Description	Q'ty (A)	(B)	(C)	(D)	(E)	(F)	I	R
45	1	982215-20305	COVER			1	1				
46	1	982514-70540	GROMMET			1	1				
47	1	982215-20306	DUCT			1	1				
48	1	982215-20307	DUCT			1	1				
49	1	26117-080504	BOLT M 8X 50 PLATED			4	4				
50A	1	982215-20308	COVER			1					
50B	1	982215-20310	COVER				1				
51	1	982215-20311	COVER			1	1				
52	1	26014-050169	BOLT M 5X 16			74	74				
53	1	982215-20312	BRACKET			1	1				
54	1	982215-20313	BRACKET			1	1				
55	1	982215-20314	BRACKET			1	1				
56A	1	982215-00800	THROTTLE			1					
56B	1	982215-00810	THROTTLE				1				
57	1	982215-00840	CLAMP			1	1				
58	1	26014-050149	BOLT M 5X 14			4	4				
59	1	26014-080209	BOLT, M8X 20			44	44				
60	1	26716-080002	NUT, M8			8	8				
61	1	982215-00811	COVER			1	1				
62	1	982215-20315	PLATE			1	1				
63A	1	982215-20316	PARTITION			1					
63B	1	982215-20317	PARTITION				1				
64	1	982701-10710	CAP, RUBBER			2	2				
65	1	982277-00100	GASKET			1	1				
66	1	982215-20318	HOLE, CHECKING A			1	1				
67A	1	982215-20319	BRACKET			1					
67B	1	982215-20320	BRACKET				1				
68	1	982215-20321	COVER			2	2				
69A	1	982215-20322	DOOR			1					
69B	1	982215-20323	DOOR				1				
70A	1	982215-20324	DOOR			1					
70B	1	982215-20325	DOOR				1				
71A	1	982215-20326	DOOR			1					
71B	1	982215-20327	DOOR				1				
72A	1	982215-20328	DOOR			1					
72B	1	982215-20329	DOOR D				1				
73	1	982215-20330	DOOR			1	1				
74A	1	982215-20331	DUCT			1					
74B	1	982215-20332	DUCT				1				
75	1	982215-20333	HOLE, CHECKING B			1	1				
76	1	982332-56016	SCREW			6	6				
77	1	982242-26000	WASHER			6	6				
78	1	982242-46000	WASHER			6	6				
79	1	26713-060002	NUT, M6			6	6				
80	1	129150-49100	COCK ASSY, 3-WAY			1	1				
81A	1	982283-00410	HOSE, WATER			1					
81B	1	982283-00430	HOSE A				1				
82A	1	982283-00400	HOSE, WATER			1					
82B	1	982283-00420	HOSE B				1				
83	1	982287-00010	HANDLE			5	5				
84	1	982287-00120	LEVER			5	5				

N:Old ←Yes/No→ New. Q:Old ←No/Yes→ New. R:Old ←Yes/Yes→ New. S:Old ←No/No→ New. W:Add. Z:Discontinued. F:Interchangeable by set. K:Q'ty Change

++ CONTINUE ++

Copyright (C) YANMAR GLOBAL CS CO., LTD. All RightsReserved.

Fig.91. BONNET (YEG20HS/24HS)

(A)=YEG8HS-BS
(B)=YEG10HS-BS
(C)=YEG20HS-BS
(D)=YEG24HS-BS
(E)=
(F)=

No.	Lev.	Parts No.	Description	Q'ty (A)	(B)	(C)	(D)	(E)	(F)	I	R
85	1	982286-00060	HINGE			10	10				
86	1	982332-55016	SCREW, M5X16			30	30				
87	1	982219-10070	CASTER			2	2				
88	1	982219-10050	WHEEL			2	2				
89	1	26116-100202	BOLT, M10X 20 PLATED			16	16				
90	1	26716-100002	NUT, M10			16	16				

N:Old ←Yes/No→ New. Q:Old ←No/Yes→ New. R:Old ←Yes/Yes→ New. S:Old ←No/No→ New. W:Add. Z:Discontinued. F:Interchangeable by set. K:Q'ty Change

Copyright (C) YANMAR GLOBAL CS CO., LTD. All RightsReserved.

Parts No. Index

Parts No.	Fig. No.	Ref. No.
101158-11190	22	16
101304-59020	12	10
	30	10
	50	2
	70	2
101720-55750	12	47
	30	46
	50	45
	70	45
102103-55520	12	25
		42
	18	32
	30	25
		41
	50	40
	70	40
103338-11190	40	19
	60	18
103854-39140	50	1
	70	1
104200-55321	12	21
		38
	30	21
		37
	50	20
		36
	70	20
		36
104200-55330	12	22
		39
	30	22
		38
	50	21
		37
	70	21
		37
104200-55341	12	40
	30	39
	50	38
	70	38
104200-55750	12	30
		48
	30	30
		47
	50	28
		46
	70	28
		46
104200-59170	12	14
	18	33

Parts No.	Fig. No.	Ref. No.
104200-59170	30	14
	50	4
	70	4
	76	24
104200-92350	18	2
	36	2
	56	25
	76	34
104200-92600	18	3
	36	3
	56	26
	76	35
104211-11370	22	19
104264-59030	12	2
		2 A
		6
	30	2
		2 A
		6
104514-42780	10	6
105010-11230	4	27
		30
	22	33
		37
105025-59510	50	5 -1
	70	5
105025-59530	70	7
		12
105025-59550	29	46
105025-59750	50	16 -1
105225-22400	8	14
105225-23200	26	18
105225-59511	50	5
105546-51330	11	8
	29	8
105582-59150	12	13
	30	13
106383-44720	16	16
	34	16
	54	16
	74	16
106383-44730	16	17
	34	17
	54	17
	74	17
110250-55610	12	26
		43
	30	26
		42
	50	41

Parts No.	Fig. No.	Ref. No.
110250-55610	70	41
114250-11120	4	7
114250-11180	4	8
114250-11190	4	9
114250-53080	49	3
	69	5
114250-53120	49	5
	69	9
114250-53130	11	32
	29	31
	49	6
	69	10
114250-53140	49	7
	69	11
114250-53210	49	8
	69	12
114250-53400	11	34
	29	33
	49	9
	69	13
119225-01340	1	16 -1
	18	10
119225-14200	7	7
119225-35300	9	11
119225-42320	10	1 I
	18	27
119225-51100	11	2
119225-51300	11	7
119225-59030	12	9 -1
	30	9 -1
119225-59560	11	42 -1
	12	12 -1
	29	41 -1
	30	12 -1
119225-59810	11	38
119241-66541	14	3
119245-66400	14	1
	32	1
	52	1
	72	1
119249-12500	5	3
119249-44590	10	24
119249-55900	12	32
119249-59540	11	43
119255-01340	1	16
119260-01200	1	15
119260-01490	2	1
119260-01510	2	2
119260-01590	2	5
119260-01770	3	10 -1

Parts No.	Fig. No.	Ref. No.
119260-02020	1	8
119260-02410	1	11
119260-02800	1	9
119260-02870	1	17
119260-02930	1	10
119260-03020	4	40
119260-03030	4	41
	18	14
119260-03031	4	41 -1
	18	14 -1
119260-07900	4	33
	22	24
119260-11100	4	5
119260-11110	4	6
119260-11200	4	20
119260-11240	4	21
119260-11260	4	22
		22 -1
119260-11270	4	23
119260-11280	4	24
119260-11310	4	44
	18	15
119260-11330	4	35 -1
119260-11340	4	10
	18	16
119260-11370	4	11
119260-11800	4	16
119260-12110	5	23
	18	19
119260-12111	5	23 -1
	18	19 -1
119260-13100	6	11
119260-13110	6	12
	18	22
119260-14100	7	2
119260-14200	7	5
119260-14400	7	4
119260-14580	7	1
119260-21200	8	2
119260-21650	8	8
119260-22300	8	13
119260-23200	8	19
119260-23910	8	18
119260-25100	7	15
119260-25900	7	9
119260-32000	9	1
119260-35081	9	13
119260-42000	10	1
119260-42001	10	1 -1
119260-42002	10	1 -2

Parts No. Index

Parts No.	Fig. No.	Ref. No.
119260-42020	10	2
	18	26
119260-44500	10	16
119260-49530	10	10
119260-49800	10	11
119260-59020	12	1
		5
	30	1
		5
119260-59520	11	45
	29	44
119260-59530	11	46
	29	45
119260-59550	11	47
119260-59820	11	39
119260-59830	11	40
119260-66010	13	37
119260-66540	13	45
119260-66720	13	27
119265-11260	4	22 A
119265-23100	8	17 -1
119265-23200	8	19 -1
119270-22091	8	11
119270-22920	8	22
119270-22970	8	23
119280-49020	10	31
119288-12050	5	1
	23	1
119288-12100	5	22
119288-12590	5	14
119288-13500	6	2
119288-13501	6	2 -1
119288-13650	6	4
119288-44760	10	26
119288-49010	10	30
119288-77340	30	34
119305-35150	9	9 -1
	27	8 -1
119454-01721	3	14
119462-12550	5	13
119600-01050	19	2
119600-01600	3	2
	21	12
119600-01722	21	4
119600-01770	21	1 -1
119600-11450	4	17
	18	17
	22	22
119600-11460	4	18
	18	18

Parts No.	Fig. No.	Ref. No.
119600-11460	22	23
119600-21580	8	6
	26	9
119600-34820	9	5
	27	5
119600-35091	27	14
119600-52021	12	18
	30	18
119600-61200	13	7
	31	4
119600-61500	13	12
	31	20
119600-61540	13	15
	31	25
119600-61541	13	15 -1
	31	25 -1
119600-61650	13	16
	31	26
119600-61900	13	36
	31	31
119600-66020	31	41
119600-66530	31	49
119600-66700	31	65
119600-66840	13	51
	31	60
119600-77330	34	22
119610-01340	19	14
	36	10
119610-01490	20	1 -1
119610-01590	20	5
119620-01200	19	13
119620-01342	19	14 -1
	36	10 -1
119620-01620	3	8
	21	7
119620-01750	3	4
	21	14
	39	3
	59	3
119620-01800	2	6
	20	6
119620-01950	2	8
	20	8
119620-02020	19	7
119620-02410	19	10
119620-02450	1	12
	7	2 A
	19	11
	25	2 A
119620-03020	22	53

Parts No.	Fig. No.	Ref. No.
119620-03030	22	54
	36	14
119620-03031	22	54 -1
	36	14 -1
119620-11080	22	6
119620-11090	22	7
119620-11100	22	12
119620-11110	22	13
119620-11120	22	14
119620-11180	22	15
119620-11200	22	27
119620-11240	22	28
119620-11260	22	39
119620-11280	22	40
119620-11310	22	57
	36	15
119620-11330	22	50 -1
119620-11350	4	12
	22	43
119620-11390	4	39
119620-11801	22	21
119620-12110	23	22
	36	16
119620-12111	23	22 -1
	36	16 -1
119620-13110	24	12
	36	18
119620-13550	6	14
119620-14100	25	2
119620-14200	25	5
119620-14400	25	4
119620-14401	25	4 -1
119620-21941	8	10
	26	6
119620-22090	26	11
119620-22300	26	13
119620-22900	26	15 -1
119620-22920	26	22
119620-22950	26	16 -1
119620-22970	26	23
119620-23910	26	20
119620-25102	25	15
119620-25912	7	21
	25	16
119620-42020	28	2
	36	22
119620-42320	28	1 I
119620-42350	10	7
119620-51101	29	2
119620-51170	11	3

Parts No.	Fig. No.	Ref. No.
119620-51170	29	3
119620-51180	11	4
	29	4
119620-51190	11	5
	29	5
119620-51250	11	6
	29	6
119620-51300	29	7
119620-51340	11	9
	29	9
119620-51350	11	10
	18	30
	29	10
119620-51370	11	11
	18	31
	29	11
119620-51450	11	12
	29	12
119620-51461	11	13
	29	13
119620-51510	11	15
	29	15
119620-51650	11	17
	29	17
119620-51660	11	18
	29	18
119620-51670	11	19
	29	19
119620-51680	11	20
	29	20
119620-51700	11	21
	29	21
119620-53000	11	28
	29	27
119620-53080	11	29
	29	28
119620-53120	11	31
	29	30
119620-53140	11	33
	29	32
119620-59700	11	50
	29	49
119620-59811	29	37
119620-59821	29	38
119620-59831	29	39
119620-77011	15	1
	33	1
119620-77820	4	49
	22	60
119621-21680	8	9

Parts No. Index

Parts No.	Fig. No.	Ref. No.
119621-21680	26	5
119621-66051	13	38
	31	42
119621-66091	13	31
	31	33
119623-01950	2	8 -1
	20	8 -1
119625-11870	40	36
	60	40
	76	7
119625-11871	40	36 -1
	60	40 -1
119625-11880	40	37
	60	41
	76	8
119625-11900	40	38
	60	37
119629-14580	25	1
119631-12520	5	4
	23	4
119631-12530	5	5
	23	5
119631-12540	5	6
		6 -1
	23	6
		6 -1
119631-12550	5	7
		7 -1
	23	7
		7 -1
119631-12570	5	8
	23	8
119631-13101	24	11
119632-07900	22	20
119632-12551	23	13
119632-12560	23	15
119632-12590	23	14
119632-55620	12	20
	30	20
119640-12580	5	16
	18	20
	23	16
119642-59540	29	42
119642-59550	11	48
	29	47
119642-59570	11	49
	29	48
119643-66532	14	2
	32	2
119643-66541	32	3

Parts No.	Fig. No.	Ref. No.
119643-66560	13	34
	31	46
119643-77900	17	5
	35	5
119644-21200	26	2 -1
119645-12100	23	21
119645-49020	28	30
119649-12500	23	3
119650-42291	28	4
119650-59200	12	15
	30	15
119660-01490	20	1
119660-01510	20	2
119660-01551	2	16
	20	16
119660-01561	2	17
	18	11
	20	17
	36	11
119660-01562	2	17 -1
	18	11 -1
	20	17 -1
	36	11 -1
119660-01570	2	18
	20	18
119660-01640	3	6
	21	8
119660-01651	3	6 A
	21	8 A
119660-01821	7	6
	25	6
119660-01911	2	7
	20	7
119660-21201	26	2
119660-21651	26	7
119660-21710	26	1 -2
119660-25022	7	13
	25	13
119660-25052	7	14
	25	14
119660-25902	25	9
119660-32001	27	1
119660-32020	9	2
	18	24
	27	2
119660-35102	27	6
119660-35112	27	7
	36	19
119660-35113	27	7 -1
	36	19 -1

Parts No.	Fig. No.	Ref. No.
119660-35150	9	9
	27	8
119660-35300	27	10
119660-42003	28	1
119660-42004	28	1 -1
119660-42005	28	1 -2
119660-42350	28	5
119660-51500	11	14
	29	14
119660-51530	11	16
	29	16
119660-61013	13	2
	31	15
119660-61051	13	3
	18	35
	31	1
	36	24
119660-61052	13	3 -1
	18	35 -1
	31	1 -1
	36	24 -1
119660-61060	13	4
	31	2
119660-61070	13	5
	18	36
	31	3
119660-61071	13	5 -1
	18	36 -1
	31	3 -1
119660-61121	13	6
	31	16
119660-61140	13	6 A
	31	16 A
119660-61150	13	6 B
	31	16 B
119660-61300	13	8
	31	8
119660-61341	13	9
	31	9
119660-61460	13	29
	31	17
119660-61491	13	11
	31	19
119660-61901	13	21
	31	32
119660-77710	17	3
	35	3
	55	3
	75	2
	78	57

Parts No.	Fig. No.	Ref. No.
119660-77710	82	62
	83	62
	85	57
	89	62
119685-21600	44	10
119688-13651	24	4
119688-49010	28	29
119810-51040	48	3
119810-55340	12	23
	30	23
119840-13150	24	13
119840-59560	50	13
	70	14
119840-59570	50	14
	70	15
119843-61011	51	3
	71	3
119843-61540	51	29
	71	29
119860-12560	18	21
119865-21600	8	7
	26	10
	44	10 -1
	64	14
119888-13500	24	2
119888-13501	24	2 -1
119888-13600	6	3
	24	3
	80	84 A
119888-13670	6	5
	24	5
119888-13680	6	6
	24	6
120130-11860	40	41
	60	58
121000-13200	6	1
		13
	18	23
	24	1
		14
	36	17
121000-13201	6	1 -1
		13 -1
	18	23 -1
	24	1 -1
		14 -1
	36	17 -1
121023-44740	10	8
121024-59090	12	1 -1
	30	1 -1

Parts No. Index

Parts No.	Fig. No.	Ref. No.
121100-22400	44	15
	64	22
121111-21501	8	5
	26	8
	44	8
	64	11
121120-01620	3	3
	21	13
121120-77930	15	15
	33	15
121236-59080	12	4
		8
	30	4
		8
121250-44901	10	14
	28	9
	46	15
	66	14
121250-55620	12	27
	30	27
121250-59080	11	42
	29	41
121250-59550	50	12
	70	13
121254-55510	12	24
	30	24
121256-44600	10	25
	28	25
	46	27
	66	27
121257-55720	12	44
	30	43
	50	42
	70	42
121257-55731	12	45
	30	44
	50	43
	70	43
121400-01640	3	12
121400-11340	40	20
	60	19
	76	14
121400-12540	41	13
	61	13
121400-12560	41	14
	61	14
121400-12570	41	15
	61	15
121400-44910	10	29
	28	28

Parts No.	Fig. No.	Ref. No.
121400-44910	46	35
	66	30
121400-91251	17	9
	35	9
	55	8
	75	7
	78	54
	85	54
121400-91271	17	10
	35	10
	55	9
	75	8
121420-12511	41	4
	61	4
121420-12540	41	7
	61	7
121420-12550	41	8
	61	8
121420-12561	41	9
	61	9
121422-12530	41	6
	61	6
121422-12570	41	10
	61	10
121422-12580	41	11
	61	11
121450-01560	2	3
	20	3
	38	3
	58	3
121450-01570	54	20
	74	20
121450-42450	10	3
	28	8
	46	14
	66	13
121450-77330	16	21
121465-12700	5	11
	23	11
121472-12660	5	10
	23	10
121492-12950	5	12
	23	12
121520-01850	12	17
	18	13
	30	17
	36	13
121520-01851	12	17 -1
	18	13 -1
	30	17 -1

Parts No.	Fig. No.	Ref. No.
121520-01851	36	13 -1
121520-34810	9	4
	27	4
	45	10
	65	10
121521-12400	5	2
	23	2
	41	2
	61	2
121521-12500	41	3
	61	3
121550-23200	44	19
	64	32
121550-49111	1	14
	19	15
121575-66830	13	50
	31	59
121750-49110	46	1
	66	10
121850-11860	4	2
	22	8
	40	7
	60	9
121850-21680	44	7
	64	9
121850-35200	45	16
	65	20
121850-35520	45	23
	65	28
121850-35531	45	24
	65	29
121850-51960	38	9
	56	4
	58	9
	68	56
	76	4
121850-61380	68	57
122117-51560	48	32
	68	44
122710-51050	48	48
	68	5
122710-51090	48	5
	68	8
123682-44210	10	17
	28	21
	46	19
	66	18
124060-01050	1	2
124064-55510	12	41
	30	40

Parts No.	Fig. No.	Ref. No.
124064-55510	50	39
	70	39
124066-59100	11	44
	12	33
	29	43
	30	32
	50	11
		32
	70	11
		32
124085-02220	3	7
	21	9
124160-01751	2	19
	4	36
	20	19
	22	46
	38	4
	40	59
	58	4
	60	53
124160-01910	37	2
	57	4
		5
124160-11340	22	18
124160-11360	4	46
	22	49
	40	57
	60	56
124160-39140	45	30
	65	35
124160-39450	9	8
	27	17
	45	31
	65	36
124223-35510	45	22
	65	27
124240-01871	38	6
	58	6
124240-01882	38	7
	56	3
	58	7
	76	3
124240-01883	38	7 -1
	56	3 -1
	58	7 -1
	76	3 -1
124250-03640	13	33
	31	45
124450-35110	9	10
	18	25

Parts No. Index

Parts No.	Fig. No.	Ref. No.
124450-35110	27	9
	36	20
124450-44510	10	18
	28	15
	46	20
	66	19
124450-44530	10	20
	28	17
	46	21
	66	21
124450-44550	10	23
	28	22
	46	25
	66	24
124450-44560	10	21
	28	18
	46	22
	66	22
124460-11340	40	21
	60	20
	76	6
124465-44950	10	4 -1
		15
	18	28
	28	10
	46	16
		17
	56	21
	66	15
		16
	76	22
124550-51350	48	20
	68	30
124550-51370	48	21
	68	31
124550-55700	12	29
	30	29
124550-59820	11	51
	29	50
	45	33
	65	41
124550-66370	13	49
	31	58
	51	43
	71	43
124559-77971	78	50
		58
	82	63
	83	63
	85	50

Parts No.	Fig. No.	Ref. No.
124559-77971	85	58
	89	63
124559-99791	82	56
	83	56
	89	56
124574-44761	46	9
124700-44740	28	6
124701-11910	42	1
	56	12
124701-11911	42	1 -1
	56	12 -1
124732-42290	46	6
	66	6
124732-77970	17	7
	35	7
	55	6
	75	5
124736-07900	40	45
	60	42
124756-67510	13	41
	31	43
	51	44
	71	44
124764-12600	5	17
	23	17
124764-44800	10	27
	28	26
	46	34
	66	28
124764-44810	10	28
	28	27
	46	24
	66	29
124766-59050	11	41
	12	3
		3 A
		7
		11
	29	40
	30	3
		3 A
		7
		11
	50	3
		8 -1
		9 -1
		10
	70	3
		8 -1
		9 -1

Parts No.	Fig. No.	Ref. No.
124766-59050	70	10
124767-59031	12	9
	30	9
124767-59080	12	12
	30	12
124770-11770	47	4
	67	4
124772-66750	13	46
	31	55
124950-11340	22	17
124950-51190	48	10
	68	12
126650-12680	41	12
	61	12
128170-51300	48	17
	68	25
128300-77920	17	6
	35	6
	55	5
	75	4
129001-32001	45	1 -1
129001-42001	46	2 -2
	66	2 -2
129001-42002	46	2 -3
	66	2 -3
129001-42040	46	40
	66	41
129100-01580	3	1
	8	4
	21	11
	26	4
	39	1
		15
	44	3
	59	1
		15
	64	5
129100-01640	39	16
	59	16
129100-01730	39	10
129100-01760	39	6 -2
129100-01770	39	6 -1
129100-01790	39	8
	59	8
129100-11100	40	15
	60	14
129100-11130	40	16
	60	15
129100-11350	40	47 -1
129100-23910	44	21

Parts No.	Fig. No.	Ref. No.
129100-23910	64	37
129100-25061	43	6
	63	6
129100-25900	48	61
	68	85
129100-35140	45	15
	65	19
129100-35300	45	12
	65	12
129100-35301	45	12 -1
129100-42001	46	2
	66	2
129100-42002	46	2 -1
	66	2 -1
129100-42020	46	4
	56	17
	66	4
	76	18
129100-49050	46	12
	66	11
129100-49800	47	3
	67	3
129100-49820	47	6
	67	6
129100-49830	47	7
	67	7
129100-49840	46	41
	47	12
	56	20
	66	42
	67	12
	76	21
129100-52100	48	57
	68	69
129100-53000	49	2
129100-55621	50	19
	70	19
129100-55650	50	22
	70	22
129100-55670	50	24
	70	24
129100-55680	50	25
	70	25
129100-55690	50	26
	70	26
129100-55700	50	27
	70	27
129100-59810	49	12
129100-59811	49	12 -1
129100-59820	49	13

Parts No. Index

Parts No.	Fig. No.	Ref. No.
129100-59821	49	13 -1
129100-59830	49	14
129100-59831	49	14 -1
129100-59951	50	17
	70	17
129100-61400	51	15
	71	15
129100-61440	51	19
	71	19
129100-61930	13	44
	31	48
129103-33031	45	4
	65	4
129103-33132	45	5
	65	5
129103-35101	45	14
	65	17
129103-35121	45	27
	56	16
	65	32
	76	17
129103-35122	45	27 -1
	56	16 -1
	65	32 -1
	76	17 -1
129103-49301	46	39
	66	1
129105-22090	44	12
	64	15
129105-22920	44	23
	64	38
129105-22970	44	24
	64	40
129111-13500	42	2
129111-13600	42	3
	80	84 B
129111-13650	42	4
129111-13670	42	5
129111-13680	42	6
129111-44560	46	26
129111-44590	28	24
	46	33
129111-67010	3	17
	21	16
	39	21
	59	21
129116-61500	51	24
	71	24
129116-61803	51	38
	71	38

Parts No.	Fig. No.	Ref. No.
129116-61890	51	41
	71	41
129120-77501	41	26
	61	26
129122-12100	41	23
129122-44480	46	11
	66	37
129129-14580	43	1 -1
129136-12600	5	17 -1
	23	17 -1
129150-01200	37	14
	57	18
129150-01650	39	16 A
	59	16 A
129150-01660	39	18
	56	6
	59	18
	76	5
129150-02020	37	8
	57	12
129150-02450	37	12
	43	3 A
	57	16
	63	2 A
129150-02800	37	9
	57	13
129150-02870	37	16
	57	20
129150-02930	37	10
	57	14
129150-02940	37	17
	57	21
129150-03020	40	52
	60	51
129150-03070	40	54
	60	46
129150-03080	40	53
	60	47
129150-03100	40	43
	60	54
129150-11230	40	34
	60	34
129150-11280	40	27
	60	30
129150-11290	40	28
129150-11310	40	51
	56	9
129150-11370	40	22
	60	22
129150-11750	40	33

Parts No.	Fig. No.	Ref. No.
129150-11750	60	33
129150-11810	40	42
	60	59
129150-12110	41	24
	56	11
129150-12111	41	24 -1
	56	11 -1
129150-13110	42	12
	56	13
129150-14101	43	2
	63	2
129150-14200	43	5
	63	5
129150-14400	43	4
	63	4
129150-14580	43	1
129150-21200	44	2
	64	4
129150-22300	44	14
	64	21
129150-23600	44	20
	64	33
129150-23610	44	22
	64	35
129150-25061	43	8
	63	8
129150-25101	43	7
	63	7
129150-32020	45	2
	56	14
	65	2
	76	15
129150-35040	45	11
	56	15
	65	11
	76	16
129150-35041	45	11 -1
	56	15 -1
	65	11 -1
	76	16 -1
129150-35150	45	28
	65	33
129150-35151	45	28 -1
	65	33 -1
129150-35350	9	12
	27	11
129150-39450	45	32
129150-49080	10	33
	28	32
	46	32

Parts No.	Fig. No.	Ref. No.
129150-49080	66	34
129150-49090	10	34
	28	33
	66	35
129150-49100	10	32
	28	31
	46	31
	66	33
	79	38
	80	18
	86	57
	87	80
	90	56
	91	80
129150-49810	47	11
	56	19
	67	11
	76	20
129150-49811	46	46
	47	11 -1
		11 -2
	56	19 -1
	66	47
	67	11 -1
		11 -2
	76	20 -1
129150-59120	11	36
	29	35
	49	10
	69	14 -1
129150-59130	11	37
	29	36
	49	11
	69	17
129150-59131	11	37 -1
	29	36 -1
	49	11 -1
	69	17 -1
129150-59580	12	34
	30	33
	50	15
		33
	70	16
		33
129150-77510	41	27
	56	23
	61	27
	76	10
129150-77511	41	27 -1
	56	23 -1

Parts No. Index

Parts No.	Fig. No.	Ref. No.
129150-77511	61	27 -1
	76	10 -1
129150-91400	2	22
	20	22
	38	22
	58	22
129155-11241	40	24
129155-11260	40	25
	60	28
129155-11270	40	26
	60	29
129155-49800	46	45
	47	10
	66	46
	67	10
129155-51020	48	53
	68	3
129155-51140	48	7
	68	9
129155-51180	48	9
	68	11
129155-51200	48	11
	68	13
129155-51250	48	13
129155-51270	48	15
	68	23
129155-51280	13	1
	18	29
	31	14
	48	16
	51	1
	68	24
	71	1
129155-51320	48	18
	68	28
129155-51340	48	19
	68	29
129155-51370	48	22
	68	32
129155-51380	48	23
	68	33
129155-51390	48	24
	68	34
129155-51400	48	25
129155-51410	48	26
	68	36
129155-51420	48	27
	68	37
129155-51450	48	28
	68	38

Parts No.	Fig. No.	Ref. No.
129155-51500	48	29
129155-51521	48	30
	68	40
129155-51530	48	58
	68	41
129155-51540	48	59
	68	42
129155-51550	48	31
	68	43
129155-51570	48	34
	68	46
129155-51580	11	35 -1
	18	34 -1
	29	34 -1
	48	35
	68	47
129155-51591	48	60
	68	48
129155-51600	48	36
	68	49
129155-51700	48	37
129155-51710	48	38
129155-51750	48	39
129155-51760	48	40
129155-51790	48	41
	68	54
129155-52050	48	56
	68	68
	76	23
129155-61012	51	3 -1
	71	3 -1
129155-61050	51	4
	71	4
129155-61060	51	5
	71	5
129155-61070	51	6
	71	6
129155-61120	51	7
	71	7
129155-61130	51	8
	71	8
129155-61140	51	9
	71	9
129155-61201	51	10
	71	10
129155-61341	51	14
	71	14
129155-61430	51	18
	71	18
129155-61450	51	20

Parts No.	Fig. No.	Ref. No.
129155-61450	71	20
129155-61460	51	21
	71	21
129155-61470	51	22
	71	22
129155-61480	13	10
	31	18
	51	35 C
	71	35 C
129155-61490	51	23
	71	23
129155-61530	13	14
	31	24
129155-61540	51	30
	71	30
129155-61590	13	28
	31	68
129155-61810	51	39
	71	39
129155-61830	11	35
		35 -2
	18	34
		34 -2
	29	34
		34 -2
	51	40
	71	40
129155-61950	51	42
	71	42
129155-66800	14	4
	32	4
	52	2
	72	2
129155-66811	52	3
	72	3
129155-66822	52	4
129156-51910	48	42
	68	55
129157-01332	37	15
	56	2
129157-01333	37	15 -1
	56	2 -1
129158-52020	48	57 B
	68	71
129158-52060	48	57 D
	68	73
129158-52070	48	57 E
	68	74
129158-52080	48	57 F
	68	75

Parts No.	Fig. No.	Ref. No.
129158-52090	48	57 G
	68	76
129158-52160	48	57 H
	68	77
129158-52250	48	57 I
	68	78
129158-52260	48	57 J
	68	79
129158-52270	48	57 K
	68	80
129158-52350	48	57 L
	68	81
129158-52360	48	57 M
	68	82
129158-52370	48	57 N
	68	83
129158-52380	48	57 O
	68	84
129211-49020	46	29 -1
129255-59580	50	7
		16
129258-49040	46	37 -1
129335-55700	12	37
	30	36
	50	35
	70	35
129350-49530	28	11
	47	1
	67	1
129350-49540	28	12
	36	23
129350-49541	28	12 -1
	36	23 -1
129350-49560	46	48
	66	49
129350-49800	28	13
129400-01520	38	5
	58	5
129400-01730	59	10
129400-01770	59	6 -1
129400-11350	60	44 -1
129400-13200	62	1
	76	13
129400-13201	62	1 -1
	76	13 -1
129400-51200	48	6
	68	20
129400-59810	69	18
129400-59820	69	19
129400-59830	69	20

Parts No. Index

Parts No.	Fig. No.	Ref. No.
129400-59840	69	21
129400-77010	73	1
129400-77011	73	1 -1
129400-77330	54	22
	74	22
129400-77400	73	2
129400-77401	73	2 -1
129400-77440	73	5
129400-77460	73	7
129400-77470	73	8
129400-77480	73	9
129400-77490	73	10
129400-77510	73	11
129400-77520	73	13
129400-77530	73	14
129400-77570	73	18
129400-77571	73	18 -1
129400-77640	73	19
129400-92400	18	8
129400-92410	36	8
129400-92420	56	31
	76	40
129403-34800	45	9
	65	9
129403-42380	46	7
	66	7
129403-44740	66	8
129403-49031	46	36
	66	38
129403-49050	46	37
	66	39
129405-01330	57	19
	76	2
129405-01331	57	19 -1
	76	2 -1
129410-77330	54	22 -1
	74	22 -1
129411-13100	62	11
129411-13500	62	2
129411-13600	62	3
	80	84 C
129411-13650	62	4
129411-13670	62	5
129411-13680	62	6
129411-44560	66	25
129411-44590	66	26
129418-32000	65	1 -1
129418-35100	45	14 -1
	65	17 -1
129436-35090	65	12 -1

Parts No.	Fig. No.	Ref. No.
129470-11080	40	12
	60	5
129470-11090	40	13
	60	6
129470-51040	68	4
129470-51060	48	4
	68	6
129470-51080	48	43
	68	7
129486-01670	39	19 -1
	59	19 -1
129488-12100	61	23
129500-61650	51	36
	71	36
129500-61700	51	37
	71	37
129503-53050	69	2
129550-11290	60	25
129550-11310	60	50
	76	9
129550-12110	61	24
	76	11
129550-12111	61	24 -1
	76	11 -1
129550-13110	62	12
	76	12
129550-39450	65	37
129550-59120	69	14
129553-32000	45	1
	65	1
129553-35500	45	17
	65	21
129553-35520	45	18
	65	23
129553-35530	45	19
	65	24
129553-35540	45	20
	65	25
129553-39650	65	45
129555-11241	60	24
129555-51400	68	35
129555-51500	68	39
129555-51700	68	50
129555-51710	68	51
129555-51750	68	52
129555-51760	68	53
129555-59510	50	6
	70	6
129555-66822	72	4
129608-49020	66	32 -1

Parts No.	Fig. No.	Ref. No.
129792-39410	65	44
129795-01780	39	17
	59	17
129795-01800	38	2
	58	2
129795-01900	54	20 -1
	74	20 -1
129795-01950	38	8
	58	8
129795-02411	37	11
	57	15
129795-11120	40	17
	60	16
129795-11180	40	18
	60	17
129795-21661	44	6
	64	8
129795-49550	47	2
	56	18
	67	2
	76	19
129795-49551	46	44
	47	2 -1
		2 -2
	56	18 -1
	66	45
	67	2 -1
		2 -2
	76	19 -1
129795-77800	4	48
	22	59
131110-66420	51	63
	71	63
135210-61090	13	48
	31	57
170022-67100	17	2
	35	2
	55	2
	79	43 A-1
		43 B-1
		43 C-1
170029-67100	75	1
	79	43 D-1
170038-91310	17	11
	35	11
	55	10
	75	9
	78	53
	82	59
	83	59

Parts No.	Fig. No.	Ref. No.
170038-91310	85	53
	89	59
171001-93100	18	1
	36	1
	56	24
	76	33
171008-77010	53	1
171008-77400	53	2
171008-77410	53	3
	73	3
171008-77420	53	4
	73	4
171008-77440	53	6
171008-77450	53	7
	73	6
171008-77460	53	8
171008-77470	53	9
171008-77480	53	10
171008-77490	53	11
171008-77500	53	12
171008-77510	53	13
	73	12
171008-77520	53	14
171008-77530	53	15
171008-77540	53	16
	73	15
171008-77570	53	19
171008-77571	53	19 -1
171008-77640	53	26
171008-77650	53	27
	73	20
171008-77660	53	28
	73	21
171008-77670	53	29
	73	22
171008-77720	53	33
	73	26
171008-77730	53	34
	73	27
171008-77740	53	35
	73	28
171008-77750	53	36
171051-01921	37	3
	57	6
171064-12600	41	19
	61	19
171080-91100	17	8
	35	8
	55	7
	75	6

Parts No. Index

Parts No.	Fig. No.	Ref. No.
171080-91100	78	51
	82	57
	83	57
	85	51
	89	57
171081-55910	12	49
	30	48
	50	47
	70	47
171301-01600	39	2
	59	2
171301-01640	21	2
		2 -1
	39	7
	59	7
171301-21650	64	7
171301-44560	28	23
171301-49010	46	28
171301-49020	46	29
171301-77201	16	1
	34	1
	54	1
	74	1
171301-77720	17	4
	35	4
	55	4
	75	3
171340-21580	44	9
171340-21650	44	5
171340-44510	28	20
171340-44740	46	8
171350-03090	40	44
	60	55
171350-13100	42	11
171351-12210	41	1
	61	1
171351-12560	41	17
	61	17
171351-12570	41	18
	61	18
171351-12580	41	16
	61	16
171400-91251	82	60
	83	60
	89	60
171420-21580	64	12
171420-49010	66	31
171420-49020	66	32
171440-44500	46	18
171460-44500	66	17

Parts No.	Fig. No.	Ref. No.
174100-54120	48	14
174307-51170	48	8
	68	10
174307-51560	48	33
	68	45
174307-51700	13	13
	31	21
	51	25
	71	25
194145-56901	17	1
	35	1
	55	1
	78	52 A
	82	58 A
	83	58 A
	85	52 A
	89	58 A
194990-22050	2	9
	6	7
		15
	13	35
	20	9
	24	7
		15
	31	40
	42	7
		13
	62	7
		13
22114-080000	80	81
22117-040000	13	17
	31	27
	51	45
	71	45
	78	16
	81	16
	82	21
	83	21
	85	16
	88	16
	89	21
22117-050000	78	26
	80	52
	82	33
	83	33
	85	26
	89	33
22117-060000	77	21
	78	46
	79	27

Parts No.	Fig. No.	Ref. No.
22117-060000	80	36
	81	23
	82	52
	83	52
	84	21
	85	46
	86	66
	87	41
	88	23
	89	52
	90	65
	91	41
22117-080000	79	15
	80	27
	86	33
	87	27
	90	32
	91	27
22117-100000	80	14
22117-120000	80	8
	86	21
	90	21
22117-160000	80	74
	87	17
	91	17
22117-200000	80	69
22137-040000	11	23
	14	5
	29	22
	32	5
	52	5
	72	5
22190-060002	51	52 -2
	71	52 -2
22190-060003	13	53 -1
	18	38 -1
	31	64 -1
22190-080002	12	16 -1
	30	16 -1
	38	20 -1
		21 -1
	58	20 -1
		21 -1
	65	43 -1
	76	25 -1
22190-100000	51	46
	71	46
22190-100002	51	46 -2
	71	46 -2
22190-120002	13	47 -1

Parts No.	Fig. No.	Ref. No.
22190-120002	18	39 -1
	31	56 -1
	50	4 -1
	51	62 -1
	70	4 -1
	71	62 -1
	76	24 -1
22190-160002	48	55 -1
	68	67 -1
22212-100000	16	18
	34	18
	54	18
	74	18
22214-080000	80	80
22217-040000	11	24
	29	23
	78	17
	81	15
	82	22
	83	22
	85	17
	88	15
	89	22
22217-050000	4	42
	22	55
	48	45
	51	35 B
	68	58
		64 A
	71	35 B
	78	27
	80	53
	82	34
	83	34
	85	27
	89	34
22217-060000	48	46
	68	59
	77	20
	78	47
	79	26
	80	35
	81	22
	82	53
	83	53
	84	20
	85	47
	88	22
	89	53
22217-080000	77	11

Parts No. Index

Parts No.	Fig. No.	Ref. No.
22217-080000	79	16
	80	26
	81	11
	84	11
	86	34
	87	35
	88	11
	90	33
	91	35
22217-100000	77	8
		25
		28
	79	9
	80	12
	81	8
		27
	84	8
		25
		28
	86	3
		8
		18
		90
	87	11
	88	8
		27
	90	3
		8
		18
		89
	91	11
22217-120000	48	62
	68	86
	79	5
	80	7
	86	22
	87	3
		9
	90	22
	91	3
		9
22217-160000	80	73
	87	18
	91	18
22217-200000	80	68
22242-000100	4	25
22242-000120	22	41
22242-000200	7	18
	25	17
22252-000210	26	14

Parts No.	Fig. No.	Ref. No.
22272-000040	13	18
	31	28
	51	34
	71	34
22272-000060	51	47
	71	47
22272-000070	13	42
	31	44
	51	48
	71	48
22287-120000	48	44
	51	49
	68	60
	71	49
22312-060080	45	26 B
	65	19 B
22351-020004	13	19
	31	29
22351-030010	65	46
22351-030014	13	20
	31	30
22351-030016	51	50
	71	50
22351-040010	2	4
	13	22
	20	4
	31	10
	44	11
	64	10
22351-050010	48	47
	68	61
22351-060012	4	19
	22	11
	40	23
	60	23
22360-040000	13	23
	14	6
	18	40
	31	37
	32	6
	51	51
	52	6
	71	51
	72	6
22360-060000	13	24
	18	41
	31	11
22372-040000	51	51 -1
	71	51 -1
22451-060000	13	52

Parts No.	Fig. No.	Ref. No.
22451-060000	31	61
22512-040120	7	3
		8
	8	3
	25	3
		8
	26	3
22512-070140	43	3
	44	4
	63	3
	64	6
23000-013000	50	8
		9
	70	8
		9
23000-016000	46	13
	66	12
23000-022000	46	38
	66	40
23000-060000	5	18
	23	18
	41	20
	61	20
23010-038000	10	35
	28	34
	46	30
	66	36
23061-070230	10	22
	28	19
	46	23
	66	23
23065-120500	4	45
	22	48
23414-050000	51	52
	71	52
23414-080000	45	34
23414-080012	11	52
	12	16
	29	51
	30	16
23414-100000	45	35
	65	42
	76	26
23414-120000	50	18
	70	18
	76	27
23414-140000	11	53
	29	52
23414-160021	10	4
23414-180000	45	25

Parts No.	Fig. No.	Ref. No.
23414-180000	65	30
23418-060000	12	50
	30	49
	50	48
	70	48
23871-010000	19	3
	37	4
	57	7
23871-020000	4	2 -1
	40	7 -1
	45	26
	60	9 -1
	65	31
23871-030000	4	2 -2
	28	1 J
	40	8
	46	3
		3 -1
	47	8
	57	11
	60	10
	66	3
		3 -1
	67	8
23887-100002	51	53
	71	53
24101-062034	7	20
	25	19
24102-063034	7	10
	25	10
24107-063074	77	22
	81	24
	84	22
	88	24
24190-130001	45	21
	65	26
24311-000120	2	10
	4	47
	9	6
	18	42
	20	10
	22	58
	27	15
	40	58
	56	10
	60	57
	76	28
24311-000160	27	12
	36	21
	38	10

Parts No. Index

Parts No.	Fig. No.	Ref. No.
24311-000160	50	29
	58	10
	70	29
	76	29
24311-000180	3	13
	18	43
24311-000200	45	6
	65	6
24311-000210	45	7
	65	7
24311-000260	18	44
24311-000320	2	20
	4	37
	18	12
	20	20
	22	47
	36	12
	38	11
	40	60
	56	5
		8
	58	11
	60	52
	76	30
24311-240100	12	31
		51
	13	39
	18	45
	30	31
		50
	31	47
	50	30
		49
	51	54
	70	30
		49
	71	54
24321-000300	46	42
	66	43
24321-000350	10	12
	18	46
24321-000550	45	8
	65	8
24321-000650	50	31
	56	22
	70	31
24341-000070	13	30
	18	47
	31	38
24341-000160	48	49

Parts No.	Fig. No.	Ref. No.
24341-000160	68	62
24341-000240	2	24
	20	24
	21	3
	38	23
	39	9
	58	23
	59	9
	76	31
24341-000250	21	3 -1
	39	9 -1
	59	9 -1
24341-000500	40	55
	56	7
	60	48
	76	32
25132-003700	46	6 -1
	66	6 -1
25132-003800	46	6 -2
	66	6 -2
26006-102502	81	9
	88	9
26013-060202	9	3
26014-050149	87	58
	91	58
26014-050169	86	35
	87	52
	90	34
	91	52
26014-060162	10	9 -1
	28	7
	66	9
26014-060169	86	54
	87	22
	90	53
	91	22
26014-060202	12	19
	30	19
26014-060252	46	10
26014-080202	23	19
26014-080209	86	36
	87	59
	90	35
	91	59
26014-080252	16	22
	34	20
	54	23
	74	23
26014-080259	87	14
	91	14

Parts No.	Fig. No.	Ref. No.
26014-080302	6	8
	24	8
	42	8
	62	8
26014-080309	86	47
	90	46
26014-080702	12	35
		52
	30	51
	50	34
		50
	70	34
		50
26022-040082	11	25
	29	24
26022-040252	16	8
	34	8
	54	8
	74	8
26022-050102	48	50
	51	55
		55 -1
	68	65 -1
	71	55
		55 -1
26022-060122	51	35
	71	35
26022-060162	48	51
	68	63
26023-050102	51	55 A
	71	55 A
26106-060102	3	15
	13	32
	14	7
	27	16
	31	39
	32	7
	52	7
	72	7
26106-060122	1	13
	5	19
	7	19
	9	7
	10	9
	19	12
	21	5
	22	26
	25	18
26106-060162	2	11
		25

Parts No.	Fig. No.	Ref. No.
26106-060162	7	11
	20	11
		25
	25	11
	38	24
	58	24
26106-060182	10	13
26106-060202	5	24
	23	23
	51	56
	71	56
26106-060222	3	9
	21	10
26106-060252	51	57
	71	57
26106-060302	2	12
	20	12
26106-060322	53	37
	73	29
26106-060352	6	17
26106-060402	2	13
	53	38
	73	30
26106-060452	3	16
	21	6
26106-060502	2	14
26106-060602	20	13
		14
26106-060652	2	15
26106-060702	13	25
	31	12
26106-060802	20	15
26106-080122	6	9
	24	9
	38	12
	42	9
	58	12
	62	9
	72	8
26106-080142	4	34
	22	25
	37	13 -1
	40	46
	41	21
	42	10
	57	17 -1
	60	43
	61	21
	62	10
26106-080162	3	18

Parts No. Index

Parts No.	Fig. No.	Ref. No.
26106-080162	5	20
	6	10
	12	36
	21	17
	24	10
	34	23 -1
	37	13
	38	13
		14
	39	11
		22
	40	56
	46	43
	57	17
	58	13
		14
	59	11
		22
	60	49
	66	44
26106-080182	14	8
	32	8
	34	23
26106-080202	27	13
	28	14
	38	15
	46	47
	47	13
	58	15
	66	48
	67	13
26106-080252	39	12
	40	39
	41	25
	47	14
	59	12
	60	38
	67	14
26106-080302	39	19
	59	19
26106-080352	39	20
	41	28
	45	13 -1
	59	20
	61	25
		28
	65	16 -1
26106-080402	24	16
26106-080452	4	32
	10	5

Parts No.	Fig. No.	Ref. No.
26106-080452	22	44
	28	3
	38	16
	39	13
		13 -1
		13 -2
	43	9
	58	16
	59	13
		13 -1
		13 -2
	63	9
26106-080502	39	14
		23
	40	40
	47	15
	59	14
		23
	60	39
	67	15
26106-080552	38	17
	58	17
26106-080602	46	5
	47	16
	66	5
	67	16
26106-080752	45	29
	65	34
26106-080802	42	14
	62	14
26106-080852	38	18
	58	18
26106-081202	30	35
26106-100402	16	23
	34	21
26112-100254	86	10
	87	10
	90	10
	91	10
26113-050082	51	35 A
	71	35 A
26113-080202	80	79
26116-050102	13	26
	31	13
26116-050152	78	41
	80	51
	82	47
	83	47
	85	41
	89	47

Parts No.	Fig. No.	Ref. No.
26116-050302	48	52
	68	64 -1
26116-050309	68	64
26116-050502	78	29
	82	36
	83	36
	85	29
	89	36
26116-060162	47	9
	67	9
	78	56
	85	56
26116-060252	78	45
	82	51
	83	51
	85	45
	89	51
26116-060304	13	40
	31	62
26116-060402	77	19 A
	80	78
	81	21 A
	84	19 A
	88	21 A
26116-060502	77	19 B
	81	21 B
	84	19 B
	88	21 B
26116-080122	52	8
26116-080252	79	14
26116-080352	45	13
	65	16
26116-100202	79	31
	87	89
	91	89
26116-100252	79	10
	80	11
	81	9 -1
	88	9 -1
26116-100302	80	13
26116-100602	77	27
	84	27
26116-102502	77	9
	84	9
26116-120252	15	49
	33	49
	53	39
	73	31
26116-120302	80	10
26116-120352	79	4

Parts No.	Fig. No.	Ref. No.
26116-120502	79	11
	80	6
26117-060504	86	15
	90	15
26117-080504	86	32
	87	49
	90	31
	91	49
26117-100204	86	89
	90	88
26117-100304	86	17
	90	17
26117-100704	86	7
	90	7
26117-120904	87	7
	91	7
26206-100252	3	5
	21	15
	39	4
	59	4
26206-100302	39	5
	59	5
26216-060202	40	9
	60	13
26216-060402	4	14
	6	20
26216-080222	6	18
		19
	24	17
	42	15
	62	15
26216-080552	24	18
26216-080702	24	19
26216-080802	42	16
	62	16
26226-080182	40	35
	60	35
26366-060002	2	21
	4	15
	5	21
	6	16
	20	21
	40	14
	41	22
	60	21
	61	22
26366-080002	4	13
	22	45
	23	20
	38	19

Parts No. Index

Parts No.	Fig. No.	Ref. No.
26366-080002	51	58
	58	19
	71	58
26366-100002	54	21
	74	21
26450-060202	9	3 -1
	27	3
26450-060252	45	3
	65	3
26557-040122	78	37
		39
	82	43
		45
	83	43
		45
	85	37
		39
	89	43
		45
26557-040152	79	21
26557-040402	77	14
	81	14
	84	14
	88	14
26557-050102	4	43
	22	56
	68	65
26587-040102	11	26
	29	25
26587-080102	7	12
	25	12
26687-120002	51	59
	71	59
26713-060002	86	84
	87	79
	90	83
	91	79
26716-040002	78	18
	82	23
	83	23
	85	18
	89	23
26716-050002	78	28
	82	35
	83	35
	85	28
	89	35
26716-060002	48	54
	68	66
	79	25

Parts No.	Fig. No.	Ref. No.
26716-060002	80	17
	86	16
		55
		65
	87	23
		40
	90	16
		54
		64
	91	23
		40
26716-080002	79	17
	80	24
	86	37
	87	28
		60
	90	36
	91	28
		60
26716-100002	16	19
	34	19
	54	19
	74	19
	77	26
	79	30
	80	15
	81	28
	84	26
	86	4
		9
		19
	87	90
	88	28
	90	4
		9
		19
	91	90
26716-120002	48	63
	68	87
	79	6
	80	9
	86	20
	87	4
		8
	90	20
	91	4
		8
26716-160002	80	75
	87	16
	91	16

Parts No.	Fig. No.	Ref. No.
26716-200002	80	70
26756-050002	13	45 E-1
26756-060002	4	28
		31
	13	43
	22	34
		38
	31	63
	51	60
	71	60
	78	48
	82	54
	83	54
	85	48
	89	54
26756-080002	60	36
26776-120002	13	46 -1
	31	55 -1
	51	61
	71	61
26979-050162	22	42
27221-050080	4	3
	22	9
27221-060100	1	3
27231-400000	1	4
27231-450000	19	4
27231-500000	37	5
	57	8
27241-100000	1	5
	40	30
	60	27
27241-120000	19	5
	37	6
	57	9
27241-200000	45	26 A
	65	19 A
27241-220000	40	10
	60	11
27241-250000	1	6
27241-300000	1	7
	19	6
	37	7
	57	10
27241-350000	4	4
27241-400000	22	10
	40	11
	60	12
27310-055000	4	9 -1
27310-070001	22	16 -1
27310-080001	40	19 -1

Parts No.	Fig. No.	Ref. No.
27310-080001	60	18 -1
28110-100120	18	4
	36	4
	56	27
	76	36
28110-140170	18	5
	36	5
	56	28
	76	37
28110-190220	18	6
	36	6
	56	29
	76	38
28210-000140	18	7
	36	7
	56	30
	76	39
42130-502220	75	10
	78	52 B
	82	58 B
	83	58 B
	85	52 B
	89	58 B
43400-500390	18	37
	51	52 -1
	71	52 -1
43400-500400	13	53
	18	38
	31	64
43400-500410	38	20
		21
	58	20
		21
	65	43
	76	25
43400-500430	51	46 -1
	71	46 -1
43400-500450	13	47
	18	39
	31	56
	51	62
	71	62
43400-500490	48	55
	68	67
711100-51540	48	12
719225-51700	11	1 -1
719246-51100	11	1
719260-11521	4	35
719260-11650	4	26
719260-11660	4	29

Parts No. Index

Parts No.	Fig. No.	Ref. No.
719260-11700	4	1
719260-21700	8	1
719260-23100	8	17
719260-23600	8	20
719260-23610	8	21
719270-01560	1	1
719270-22501	8	12
719270-22541	8	16
719270-22821	8	15
719288-01540	3	10
719288-92600	18	9
719288-92602	18	9 -1
719288-92603	18	9 -2
719600-01541	21	1
719610-01560	19	1
719620-02800	19	8
719620-02870	19	16
719620-02930	19	9
719620-11520	22	50
719620-11650	22	31
719620-11660	22	35
719620-11701	22	1
719620-22500	26	12 -1
719620-22501	26	12
719620-22540	26	16
719620-22820	26	15
719620-23100	26	17
719620-23600	26	24
719620-23610	26	21
719620-53100	11	27
	29	26
719621-51100	29	1
		1 -2
719621-51700	29	1 -1
719649-92600	36	9
719649-92610	36	9 -1
719649-92611	36	9 -2
719660-14590	25	7
719660-21700	26	1 -1
719660-21701	26	1
719810-01500	38	1
	58	1
729100-53100	49	1
729102-21700	44	1
729105-22500	44	13
	64	17
729105-22910	44	16
	64	23
729105-22950	44	17
729105-22951	44	17 -1

Parts No.	Fig. No.	Ref. No.
729105-22951	64	25
729111-51420	48	1
729119-92600	56	1
729119-92601	56	1 -1
729132-11520	40	47
729150-11650	60	31
729150-11651	40	31
729150-23700	44	18
	64	29
729157-01560	37	1
729400-01541	59	6
729400-21700	64	1 -1
729402-11650	40	31 -1
	60	31 -1
729402-11701	60	1
729402-14580	63	1
729402-23100	44	18 -1
	64	29 -1
729403-11520	60	44
729405-01560	57	1
729411-51430	68	1
729419-92600	76	1
729419-92601	76	1 -1
729474-21700	64	1
729503-53200	69	1
771341-01540	39	6
771364-11700	40	1
977770-01212	18	48
	36	25
	56	32
	76	41
982023-10300	78	33
	82	40
	83	40
	85	33
	89	40
982030-10300	78	32
	82	39
	83	39
	85	32
	89	39
982036-05002	78	61
	82	66
	83	66
	85	61
	89	66
982110-20300	77	23 B
	81	25 B
	84	23 B
	88	25 B

Parts No.	Fig. No.	Ref. No.
982110-20350	77	23 A
	84	23 A
982110-20680	81	25 A
	88	25 A
982110-90020	81	20 A
	88	20 A
982110-90090	77	18 B
	84	18 B
982110-90100	77	18 C
	81	20 C
	84	18 C
	88	20 C
982110-90140	77	18 A
	81	20 B
	84	18 A
	88	20 B
982111-90010	77	17 A
	81	19 A
	84	17 A
	88	19 A
982111-90020	77	17 B
	81	19 B
	84	17 B
	88	19 B
982112-00120	77	1
	81	1 B
	84	1
	88	1 B
982112-00150	81	1 A
	88	1 A
982112-20150	77	2
	81	2 B
	84	2
	88	2 B
982112-20180	81	2 A
	88	2 A
982116-90250	77	10 A
	81	10 A
	84	10 A
	88	10 A
982116-90260	77	10 B
	81	10 B
	84	10 B
	88	10 B
982116-90270	77	10 C
	81	10 C
	84	10 C
	88	10 C
982116-90280	77	10 D
	81	10 D

Parts No.	Fig. No.	Ref. No.
982116-90280	84	10 D
	88	10 D
982117-10011	77	13
	81	13
	84	13
	88	13
982117-40010	77	16
	81	18
	84	16
	88	18
982118-10070	81	26 A
	88	26 A
982118-10100	77	24 B
	81	26 C
	84	24 B
	88	26 C
982118-10290	77	24 A
	81	26 B
	84	24 A
	88	26 B
982118-10380	81	26 D
	88	26 D
982174-80550	77	3 A
982174-80551	77	3 A-1
982174-80555	84	3 A
982174-80560	77	3 B
982174-80561	77	3 B-1
982174-80565	84	3 B
982174-80570	77	3 C
982174-80571	77	3 C-1
982174-80575	84	3 C
982174-80580	77	3 D
982174-80581	77	3 D-1
982174-80585	84	3 D
982174-80590	77	3 E
982174-80591	77	3 E-1
982174-80595	84	3 E
982174-80600	77	3 F
982174-80601	77	3 F-1
982174-80605	84	3 F
982174-80610	77	3 G
982174-80611	77	3 G-1
982174-80615	84	3 G
982174-80620	77	3 H
982174-80621	77	3 H-1
982174-80625	84	3 H
982174-80630	77	3 I
982174-80631	77	3 I-1
982174-80635	84	3 I
982174-80640	77	4 A

Parts No. Index

Parts No.	Fig. No.	Ref. No.
982174-80641	77	4 A-1
982174-80645	84	4 A
982174-80650	77	4 B
982174-80651	77	4 B-1
982174-80655	84	4 B
982174-80660	77	4 C
982174-80661	77	4 C-1
982174-80665	84	4 C
982174-80670	77	4 D
982174-80671	77	4 D-1
982174-80675	84	4 D
982174-80680	77	4 E
982174-80681	77	4 E-1
982174-80685	84	4 E
982174-80690	77	4 F
982174-80691	77	4 F-1
982174-80695	84	4 F
982174-80700	77	4 G
982174-80701	77	4 G-1
982174-80705	84	4 G
982174-80710	77	4 H
982174-80711	77	4 H-1
982174-80715	84	4 H
982174-80720	77	4 I
982174-80721	77	4 I-1
982174-80725	84	4 I
982174-80730	77	5 A
982174-80731	77	5 A-1
982174-80735	84	5 A
982174-80740	77	5 B
982174-80741	77	5 B-1
982174-80745	84	5 B
982174-80750	77	5 C
982174-80751	77	5 C-1
982174-80755	84	5 C
982174-80760	77	5 D
982174-80761	77	5 D-1
982174-80765	84	5 D
982174-80770	77	5 E
982174-80771	77	5 E-1
982174-80775	84	5 E
982174-80780	77	5 F
982174-80781	77	5 F-1
982174-80785	84	5 F
982174-80790	77	5 G
982174-80791	77	5 G-1
982174-80795	84	5 G
982174-80800	77	5 H
982174-80801	77	5 H-1
982174-80805	84	5 H

Parts No.	Fig. No.	Ref. No.
982174-80810	77	5 I
982174-80811	77	5 I-1
982174-80815	84	5 I
982174-80820	77	6 A
982174-80821	77	6 A-1
982174-80825	84	6 A
982174-80830	77	6 B
982174-80831	77	6 B-1
982174-80835	84	6 B
982174-80840	77	6 C
982174-80841	77	6 C-1
982174-80845	84	6 C
982174-80850	77	6 D
982174-80851	77	6 D-1
982174-80855	84	6 D
982174-80860	77	6 E
982174-80861	77	6 E-1
982174-80865	84	6 E
982174-80870	77	6 F
982174-80871	77	6 F-1
982174-80875	84	6 F
982174-80880	77	6 G
982174-80881	77	6 G-1
982174-80885	84	6 G
982174-80890	77	6 H
982174-80891	77	6 H-1
982174-80895	84	6 H
982174-80900	77	6 I
982174-80901	77	6 I-1
982174-80905	84	6 I
982174-81500	81	3 A
982174-81505	88	3 A
982174-81510	81	3 B
982174-81515	88	3 B
982174-81520	81	3 C
982174-81525	88	3 C
982174-81530	81	3 D
982174-81535	88	3 D
982174-81540	81	3 E
982174-81545	88	3 E
982174-81550	81	3 F
982174-81555	88	3 F
982174-81560	81	3 G
982174-81565	88	3 G
982174-81570	81	3 H
982174-81575	88	3 H
982174-81580	81	3 I
982174-81585	88	3 I
982174-81590	81	3 J
982174-81595	88	3 J

Parts No.	Fig. No.	Ref. No.
982174-81600	81	3 K
982174-81605	88	3 K
982174-81610	81	3 L
982174-81615	88	3 L
982174-81620	81	3 M
982174-81625	88	3 M
982174-81630	81	3 N
982174-81635	88	3 N
982174-81640	81	3 O
982174-81645	88	3 O
982174-81650	81	3 P
982174-81655	88	3 P
982174-81660	81	3 Q
982174-81665	88	3 Q
982174-81670	81	4 A
982174-81675	88	4 A
982174-81680	81	4 B
982174-81685	88	4 B
982174-81690	81	4 C
982174-81695	88	4 C
982174-81700	81	4 D
982174-81705	88	4 D
982174-81710	81	4 E
982174-81715	88	4 E
982174-81720	81	4 F
982174-81725	88	4 F
982174-81730	81	4 G
982174-81735	88	4 G
982174-81740	81	4 H
982174-81745	88	4 H
982174-81750	81	4 I
982174-81755	88	4 I
982174-81760	81	4 J
982174-81765	88	4 J
982174-81770	81	4 K
982174-81775	88	4 K
982174-81780	81	4 L
982174-81785	88	4 L
982174-81790	81	4 M
982174-81795	88	4 M
982174-81800	81	4 N
982174-81805	88	4 N
982174-81810	81	4 O
982174-81815	88	4 O
982174-81820	81	4 P
982174-81825	88	4 P
982174-81830	81	4 Q
982174-81835	88	4 Q
982174-81840	81	5 A
982174-81845	88	5 A

Parts No.	Fig. No.	Ref. No.
982174-81850	81	5 B
982174-81855	88	5 B
982174-81860	81	5 C
982174-81865	88	5 C
982174-81870	81	5 D
982174-81875	88	5 D
982174-81880	81	5 E
982174-81885	88	5 E
982174-81890	81	5 F
982174-81895	88	5 F
982174-81900	81	5 G
982174-81905	88	5 G
982174-81910	81	5 H
982174-81915	88	5 H
982174-81920	81	5 I
982174-81925	88	5 I
982174-81930	81	5 J
982174-81935	88	5 J
982174-81940	81	5 K
982174-81945	88	5 K
982174-81950	81	5 L
982174-81955	88	5 L
982174-81960	81	5 M
982174-81965	88	5 M
982174-81970	81	5 N
982174-81975	88	5 N
982174-81980	81	5 O
982174-81985	88	5 O
982174-81990	81	5 P
982174-81995	88	5 P
982174-82000	81	5 Q
982174-82005	88	5 Q
982174-82010	81	6 A
982174-82015	88	6 A
982174-82020	81	6 B
982174-82025	88	6 B
982174-82030	81	6 C
982174-82035	88	6 C
982174-82040	81	6 D
982174-82045	88	6 D
982174-82050	81	6 E
982174-82055	88	6 E
982174-82060	81	6 F
982174-82065	88	6 F
982174-82070	81	6 G
982174-82075	88	6 G
982174-82080	81	6 H
982174-82085	88	6 H
982174-82090	81	6 I
982174-82095	88	6 I

Parts No. Index

Parts No.	Fig. No.	Ref. No.
982174-82100	81	6 J
982174-82105	88	6 J
982174-82110	81	6 K
982174-82115	88	6 K
982174-82120	81	6 L
982174-82125	88	6 L
982174-82130	81	6 M
982174-82135	88	6 M
982174-82140	81	6 N
982174-82145	88	6 N
982174-82150	81	6 O
982174-82155	88	6 O
982174-82160	81	6 P
982174-82165	88	6 P
982174-82170	81	6 Q
982174-82175	88	6 Q
982190-00010	77	7 A
	81	7 A
	84	7 A
	88	7 A
982190-00020	77	7 B
	81	7 B
	84	7 B
	88	7 B
982210-20550	79	2 A
982210-20560	79	2 B
982210-20570	79	2 C
982210-20580	79	2 D
982210-40490	79	1 A
982210-40500	79	1 B
982210-40510	79	1 C
982210-40520	79	1 D
982212-30050	79	23 A
	80	33 A
	86	63
	90	62
982212-30070	79	23 B
	80	33 B
	86	64
	87	38
	90	63
	91	38
982212-30080	79	24
	80	34
	87	39
	91	39
982215-00330	79	20
982215-00600	78	55
	79	44
	85	55

Parts No.	Fig. No.	Ref. No.
982215-00610	79	43 A
	80	85 A
982215-00620	79	43 B
	80	85 B
982215-00630	79	43 C
	80	85 C
982215-00640	79	43 D
	80	85 D
982215-00800	87	56 A
	91	56 A
982215-00810	87	56 B
	91	56 B
982215-00811	87	61
	91	61
982215-00840	87	57
	91	57
982215-20261	86	1 A
	90	1 A
982215-20262	86	1 B
	90	1 B
982215-20263	86	5
	90	5
982215-20264	86	6
	90	6
982215-20265	86	11
	90	11
982215-20266	86	12
	90	12
982215-20267	86	23
	90	23
982215-20268	86	24
982215-20269	86	25
	90	24
982215-20270	86	26
	90	25
982215-20271	86	28
	90	27
982215-20272	86	29
	90	28
982215-20273	86	30
	90	29
982215-20274	86	31
	90	30
982215-20275	86	38
	90	37
982215-20276	86	39
	90	38
982215-20277	86	40 A
	90	39 A
982215-20278	86	40 B

Parts No.	Fig. No.	Ref. No.
982215-20278	90	39 B
982215-20279	86	41
	90	40
982215-20280	86	67
	90	66
982215-20281	86	68
	90	67
982215-20282	86	73
	90	72
982215-20283	86	74
	90	73
982215-20284	86	75
	90	74
982215-20285	86	76
	90	75
982215-20286	86	77
	90	76
982215-20287	86	78
	90	77
982215-20288	86	79
	90	78
982215-20289	87	1 A
	91	1 A
982215-20290	87	1 B
	91	1 B
982215-20294	87	5
	91	5
982215-20295	87	6
	91	6
982215-20296	87	12 A
	91	12 A
982215-20297	87	12 B
	91	12 B
982215-20298	87	13 A
	91	13 A
982215-20300	87	13 B
	91	13 B
982215-20301	87	15
	91	15
982215-20302	87	42
	91	42
982215-20303	87	43
	91	43
982215-20304	87	44
	91	44
982215-20305	87	45
	91	45
982215-20306	87	47
	91	47
982215-20307	87	48

Parts No.	Fig. No.	Ref. No.
982215-20307	91	48
982215-20308	87	50 A
	91	50 A
982215-20310	87	50 B
	91	50 B
982215-20311	87	51
	91	51
982215-20312	87	53
	91	53
982215-20313	87	54
	91	54
982215-20314	87	55
	91	55
982215-20315	87	62
	91	62
982215-20316	87	63 A
	91	63 A
982215-20317	87	63 B
	91	63 B
982215-20318	87	66
	91	66
982215-20319	87	67 A
	91	67 A
982215-20320	87	67 B
	91	67 B
982215-20321	87	68
	91	68
982215-20322	87	69 A
	91	69 A
982215-20323	87	69 B
	91	69 B
982215-20324	87	70 A
	91	70 A
982215-20325	87	70 B
	91	70 B
982215-20326	87	71 A
	91	71 A
982215-20327	87	71 B
	91	71 B
982215-20328	87	72 A
	91	72 A
982215-20329	87	72 B
	91	72 B
982215-20330	87	73
	91	73
982215-20331	87	74 A
	91	74 A
982215-20332	87	74 B
	91	74 B
982215-20333	87	75

Parts No. Index

Parts No.	Fig. No.	Ref. No.
982215-20333	91	75
982217-00030	79	22 A
	80	32 A
	86	62
	90	61
982217-00040	79	22 B
	80	32 B
	87	37
	91	37
982217-30020	86	51 A
	90	50 A
982217-30050	86	53
	87	21
	90	52
	91	21
982217-30220	79	39
	80	19
	86	51 B
	87	19
	90	50 B
	91	19
982217-30260	79	42
	80	22
982217-90200	79	32
982217-90201	80	38
982217-90210	79	33
	80	39
	86	69
	90	68
982217-90570	86	71
	90	70
982217-90580	87	25
	91	25
982218-00090	79	34
	80	40
982218-00190	87	26
	91	26
982218-00210	86	72
	90	71
982219-00110	79	3 B
	80	3 B
	87	2
	91	2
982219-00460	79	3 A
	80	3 A
	86	2
	90	2
982219-10010	79	28 A
	86	88
	90	87

Parts No.	Fig. No.	Ref. No.
982219-10050	79	28 B
	87	88
	91	88
982219-10060	79	29 A
	86	87
	90	86
982219-10070	79	29 B
	87	87
	91	87
982242-26000	86	82
	87	77
	90	81
	91	77
982242-46000	86	83
	87	78
	90	82
	91	78
982247-00010	79	7 A
	80	4 A
982247-00020	79	7 B
	80	4 B
982247-00030	79	7 C
	80	4 C
982247-00040	79	8 A
	80	5 A
982247-00050	79	8 B
	80	5 B
982247-00060	79	8 C
	80	5 C
982275-00200	80	83 A
982275-00210	80	83 B
982275-00220	80	83 C
982275-00230	80	83 D
982275-00310	86	43
	90	42
982275-00320	87	32
	91	32
982275-00360	86	44
	90	43
982276-00240	86	45 A
	90	44 A
982276-00250	86	45 B
	90	44 B
982276-00260	87	33 A
	91	33 A
982276-00270	87	33 B
	91	33 B
982277-00040	86	46
	90	45
982277-00050	87	34

Parts No.	Fig. No.	Ref. No.
982277-00050	91	34
982277-00090	86	42
	90	41
982277-00100	87	65
	91	65
982278-00015	80	28 A
982278-00016	80	28 B
982283-00220	86	52 A
	90	51 A
982283-00230	86	52 B
	90	51 B
982283-00240	87	20 A
	91	20 A
982283-00250	87	20 B
	91	20 B
982283-00280	86	48
	90	47
982283-00290	86	49
	90	48
982283-00300	87	29 A
	91	29 A
982283-00310	87	30 A
	91	30 A
982283-00320	87	29 B
	91	29 B
982283-00330	87	30 B
	91	30 B
982283-00380	86	59
	90	58
982283-00390	86	58
	90	57
982283-00400	87	82 A
	91	82 A
982283-00410	87	81 A
	91	81 A
982283-00420	87	82 B
	91	82 B
982283-00430	87	81 B
	91	81 B
982283-00440	87	36
	91	36
982283-06010	79	35
	80	30
982283-06020	79	36
	80	29
982283-16010	79	40
	80	20
982284-00012	79	37
	80	31
982284-00016	86	50

Parts No.	Fig. No.	Ref. No.
982284-00016	87	31
	90	49
	91	31
982284-00025	79	41
	80	21
	86	56
	87	24
	90	55
	91	24
982286-00060	80	50
	86	85
	87	85
	90	84
	91	85
982287-00010	80	48
	86	60
	87	83
	90	59
	91	83
982287-00090	80	49
982287-00120	86	80
	87	84
	90	79
	91	84
982287-00130	86	61
	90	60
982298-00010	79	12 A
982298-00020	79	12 B
982298-00030	79	12 C
982298-00040	79	12 D
982298-10010	79	13 A
982298-10020	79	13 B
982298-10030	79	13 C
982298-10040	79	13 D
982298-20010	79	18
982314-50835	77	12
	81	12
	84	12
	88	12
982317-00070	78	43
	82	49
	83	49
	85	43
	89	49
982330-00480	78	15
	82	20
	83	20
	85	15
	89	20
982330-06015	80	43

Parts No. Index

Parts No.	Fig. No.	Ref. No.
982332-05010	80	54
982332-55016	86	86
	87	86
	90	85
	91	86
982332-56016	86	81
	87	76
	90	80
	91	76
982343-03015	78	31
	82	38
	83	38
	85	31
	89	38
982343-04015	78	10
	82	14
	83	14
	85	10
	89	14
982343-05014	78	25
		62
	82	32
		67
	83	32
		67
	85	25
		62
	89	32
		67
982343-06016	79	19
	80	16
982343-08020	80	25
982343-08025	80	23
982365-00010	80	67
982365-00020	80	72
982510-50010	82	9 A
		9 B
		9 C
		9 D
	83	9 A
		9 B
		9 C
		9 D
	89	9 A
		9 B
		9 C
		9 D
982510-50040	82	9 E
		9 F
		9 G

Parts No.	Fig. No.	Ref. No.
982510-50040	82	9 H
	83	9 E
		9 F
		9 G
		9 H
	89	9 E
		9 F
		9 G
		9 H
982510-50080	82	9 I
	83	9 I
	89	9 I
982510-50540	78	5 B
	85	5 B
982510-50550	78	5 A
	85	5 A
982510-80056	78	6
	82	10 E
		10 F
		10 G
		10 H
	83	10 E
		10 F
		10 G
		10 H
	85	6
	89	10 E
		10 F
		10 G
		10 H
982510-80220	82	10 A
		10 B
		10 C
		10 D
		10 I
	83	10 A
		10 B
		10 C
		10 D
		10 I
	89	10 A
		10 B
		10 C
		10 D
		10 I
982511-00020	78	11
	82	15
	83	15
	85	11
	89	15

Parts No.	Fig. No.	Ref. No.
982511-10030	78	36
	85	36
982511-10040	78	35
	82	42
	83	42
	85	35
	89	42
982511-50010	78	40 A
		40 B
	85	40 A
		40 B
982511-50040	78	40 C
	85	40 C
982511-50560	82	46 A
	83	46 A
	89	46 A
982511-50570	82	46 B
	83	46 B
	89	46 B
982511-60010	82	11 A
		11 B
		11 C
		11 D
		11 I
	83	11 A
		11 B
		11 C
		11 D
		11 I
	89	11 A
		11 B
		11 C
		11 D
		11 I
982511-60020	78	7
	82	11 E
		11 F
		11 G
		11 H
	83	11 E
		11 F
		11 G
		11 H
	85	7
	89	11 E
		11 F
		11 G
		11 H
982511-80110	78	19 A
	85	19 A

Parts No.	Fig. No.	Ref. No.
982511-80120	78	19 B
	85	19 B
982511-80130	78	19 C
	85	19 C
982511-80140	78	19 D
	85	19 D
982511-80150	78	19 E
	85	19 E
982511-80160	78	19 F
	85	19 F
982511-80170	78	19 G
	85	19 G
982511-80180	78	19 H
	85	19 H
982511-80190	78	19 I
	85	19 I
982511-80200	78	20 A
	85	20 A
982511-80210	78	20 B
	85	20 B
982511-80220	78	20 C
	85	20 C
982511-80230	78	20 D
	85	20 D
982511-80240	78	20 E
	85	20 E
982511-80250	78	20 F
	85	20 F
982511-80260	78	20 G
	85	20 G
982511-80270	78	20 H
	85	20 H
982511-80280	78	20 I
	85	20 I
982511-80290	78	21 A
	85	21 A
982511-80300	78	21 B
	85	21 B
982511-80310	78	21 C
	85	21 C
982511-80320	78	21 D
	85	21 D
982511-80330	78	21 E
	85	21 E
982511-80340	78	21 F
	85	21 F
982511-80350	78	21 G
	85	21 G
982511-80360	78	21 H
	85	21 H

Parts No. Index

Parts No.	Fig. No.	Ref. No.
982511-80370	78	21 I
	85	21 I
982511-80380	78	22 A
	85	22 A
982511-80390	78	22 B
	85	22 B
982511-80400	78	22 C
	85	22 C
982511-80410	78	22 D
	85	22 D
982511-80420	78	22 E
	85	22 E
982511-80430	78	22 F
	85	22 F
982511-80440	78	22 G
	85	22 G
982511-80450	78	22 H
	85	22 H
982511-80460	78	22 I
	85	22 I
982511-90020	78	8
	82	12
	83	12
	85	8
	89	12
982512-10040	77	15 A
	81	17 A
	84	15 A
	88	17 A
982512-10050	77	15 B
	81	17 B
	84	15 B
	88	17 B
982512-10120	77	15 C
	81	17 C
	84	15 C
	88	17 C
982512-10130	77	15 D
	81	17 D
	84	15 D
	88	17 D
982512-40090	78	12 E
982512-40091	78	12 E-1
	85	12 E
982512-40100	78	13 F
982512-40101	78	13 F-1
	85	13 F
982512-40250	78	13 B
		13 D
		13 H

Parts No.	Fig. No.	Ref. No.
982512-40250	78	13 K
982512-40251	78	13 B-1
		13 D-1
		13 H-1
		13 K-1
	85	13 B
		13 D
		13 H
		13 K
982512-40260	78	13 A
		13 J
		14 B
		14 E
982512-40261	78	13 A-1
		13 J-1
		14 B-1
		14 E-1
	85	13 A
		13 J
		14 B
		14 E
982512-40320	78	14 D
982512-40321	78	14 D-1
	85	14 D
982512-40330	78	13 G
		13 I
982512-40331	78	13 G-1
		13 I-1
	85	13 G
		13 I
982512-40350	78	14 A
		14 C
982512-40351	78	14 A-1
		14 C-1
	85	14 A
		14 C
982512-40510	82	16 A
		16 E
		16 F
		16 G
		16 H
		16 I
		16 J
982512-40511	83	16 A
		16 E
		16 F
		16 G
		16 H
		16 I
		16 J

Parts No.	Fig. No.	Ref. No.
982512-40511	89	16 A
		16 E
		16 F
		16 G
		16 H
		16 I
		16 J
982512-40520	82	16 B
		16 C
		16 D
		17 B
		17 C
		17 J
		17 K
		17 L
982512-40521	83	16 B
		16 C
		16 D
		17 B
		17 C
		17 J
		17 K
		17 L
	89	16 B
		16 C
		16 D
		17 B
		17 C
		17 J
		17 K
		17 L
982512-40530	82	17 A
		17 D
		17 E
		17 F
		17 G
		17 H
		17 I
982512-40531	83	17 A
		17 D
		17 E
		17 F
		17 G
		17 H
		17 I
	89	17 A
		17 D
		17 E
		17 F
		17 G

Parts No.	Fig. No.	Ref. No.
982512-40531	89	17 H
		17 I
982512-40740	82	18 F
		18 G
		18 H
982512-40741	83	18 F
		18 G
		18 H
	89	18 F
		18 G
		18 H
982512-40750	82	18 A
		18 B
		18 C
		18 D
		18 E
		18 I
		19 F
		19 G
		19 H
982512-40751	83	18 A
		18 B
		18 C
		18 D
		18 E
		18 I
		19 F
		19 G
		19 H
	89	18 A
		18 B
		18 C
		18 D
		18 E
		18 I
		19 F
		19 G
		19 H
982512-40760	82	19 A
		19 B
		19 C
		19 D
		19 E
		19 I
982512-40761	83	19 A
		19 B
		19 C
		19 D
		19 E
		19 I

Parts No. Index

Parts No.	Fig. No.	Ref. No.
982512-40761	89	19 A
		19 B
		19 C
		19 D
		19 E
		19 I
982512-50060	78	12 B
982512-50061	78	12 B-1
	85	12 B
982512-50070	78	12 D
		13 C
		13 E
982512-50071	78	12 D-1
		13 C-1
		13 E-1
	85	12 D
		13 C
		13 E
982512-50080	78	12 A
		12 C
982512-50081	78	12 A-1
		12 C-1
	85	12 A
		12 C
982513-10050	78	34
	82	41
	83	41
	85	34
	89	41
982513-10060	78	30
	82	37
	83	37
	85	30
	89	37
982513-70150	82	44
	83	44
	89	44
982513-70160	78	38
	85	38
982513-80010	78	9 A
		9 E
	85	9 A
		9 E
982513-80020	78	9 B
		9 F
	85	9 B
		9 F
982513-80040	78	9 C
		9 H
	82	13 E

Parts No.	Fig. No.	Ref. No.
982513-80040	82	13 F
		13 G
		13 H
		13 I
	83	13 E
		13 F
		13 G
		13 H
		13 I
	85	9 C
		9 H
	89	13 E
		13 F
		13 G
		13 H
		13 I
982513-80060	78	9 D
		9 I
	85	9 D
		9 I
982513-80090	82	13 J
		13 K
		13 L
		13 M
	83	13 J
		13 K
		13 L
		13 M
	89	13 J
		13 K
		13 L
		13 M
982513-80130	78	9 G
	82	13 A
		13 B
		13 C
		13 D
		13 N
		13 O
		13 P
		13 Q
		13 R
	83	13 A
		13 B
		13 C
		13 D
		13 N
		13 O
		13 P
		13 Q

Parts No.	Fig. No.	Ref. No.
982513-80130	83	13 R
	85	9 G
	89	13 A
		13 B
		13 C
		13 D
		13 N
		13 O
		13 P
		13 Q
		13 R
982513-80410	82	61 A
	83	61 A
	89	61 A
982513-80420	82	61 B
	83	61 B
	89	61 B
982513-90050	78	23 A
		23 B
		23 C
		24 C
		24 D
		24 E
		24 G
		24 H
		24 I
	85	23 A
		23 B
		23 C
		24 C
		24 D
		24 E
		24 G
		24 H
		24 I
982513-90060	78	24 A
		24 B
		24 F
		24 L
		24 N
		24 O
	85	24 A
		24 B
		24 F
		24 L
		24 N
		24 O
982513-90070	78	24 J
		24 K
		24 M

Parts No.	Fig. No.	Ref. No.
982513-90070	82	28 A
		28 C
		28 D
		28 E
		28 F
		28 G
		28 H
		29 C
		29 D
		29 E
		29 F
		29 G
		29 H
		29 M
		29 N
		29 Q
		30 E
		30 F
		30 I
		30 K
		30 L
		30 M
		30 N
		30 O
		30 P
		31 G
		31 H
		31 J
	83	28 A
		28 C
		28 D
		28 E
		28 F
		28 G
		28 H
		29 C
		29 D
		29 E
		29 F
		29 G
		29 H
		29 M
		29 N
		29 Q
		30 E
		30 F
		30 I
		30 K
		30 L
		30 M

Parts No. Index

Parts No.	Fig. No.	Ref. No.
982513-90070	83	30 N
		30 O
		30 P
		31 G
		31 H
		31 J
	85	24 J
		24 K
		24 M
	89	28 A
		28 C
		28 D
		28 E
		28 F
		28 G
		28 H
		29 C
		29 D
		29 E
		29 F
		29 G
		29 H
		29 M
		29 N
		29 Q
		30 E
		30 F
		30 I
		30 K
		30 L
		30 M
		30 N
		30 O
		30 P
		31 G
		31 H
		31 J
982513-90080	82	28 B
		28 I
		29 A
		29 B
		29 I
		29 J
		29 K
		29 L
		29 O
		29 P
		30 G
		30 H
		30 J

Parts No.	Fig. No.	Ref. No.
982513-90080	82	31 E
		31 F
		31 I
		31 K
		31 L
		31 M
		31 N
		31 O
		31 P
	83	28 B
		28 I
		29 A
		29 B
		29 I
		29 J
		29 K
		29 L
		29 O
		29 P
		30 G
		30 H
		30 J
		31 E
		31 F
		31 I
		31 K
		31 L
		31 M
		31 N
		31 O
		31 P
	89	28 B
		28 I
		29 A
		29 B
		29 I
		29 J
		29 K
		29 L
		29 O
		29 P
		30 G
		30 H
		30 J
		31 E
		31 F
		31 I
		31 K
		31 L
		31 M

Parts No.	Fig. No.	Ref. No.
982513-90080	89	31 N
		31 O
		31 P
982513-90150	82	30 A
		30 B
		30 C
		30 D
	83	30 A
		30 B
		30 C
		30 D
	89	30 A
		30 B
		30 C
		30 D
982513-90160	82	31 A
		31 B
		31 C
		31 D
	83	31 A
		31 B
		31 C
		31 D
	89	31 A
		31 B
		31 C
		31 D
982514-00040	78	44
	82	50
	83	50
	85	44
	89	50
982514-70480	80	37
982514-70540	86	27
	87	46
	90	26
	91	46
982515-60020	78	1 C
		1 D
		1 E
		1 H
		1 I
		2 I
	85	1 C
		1 D
		1 E
		1 H
		1 I
		2 I
982515-60030	78	1 B

Parts No.	Fig. No.	Ref. No.
982515-60030	78	1 G
		2 C
		2 D
		2 E
		2 G
		2 H
	85	1 B
		1 G
		2 C
		2 D
		2 E
		2 G
		2 H
982515-60040	78	1 A
		1 F
		2 A
		2 B
		2 F
		3 C
		3 D
		3 E
		3 G
		3 H
		3 I
		4 D
		4 E
		4 I
	82	5 C
		6 D
		6 L
	83	5 C
		6 D
		6 L
	85	1 A
		1 F
		2 A
		2 B
		2 F
		3 C
		3 D
		3 E
		3 G
		3 H
		3 I
		4 D
		4 E
		4 I
	89	5 C
		6 D
		6 L

Parts No. Index

Parts No.	Fig. No.	Ref. No.
982515-60050	78	3 A
		3 B
		3 F
		4 C
		4 G
		4 H
	82	5 B
		5 I
		6 C
		6 J
		6 K
		7 D
	83	5 B
		5 I
		6 C
		6 J
		6 K
		7 D
	85	3 A
		3 B
		3 F
		4 C
		4 G
		4 H
	89	5 B
		5 I
		6 C
		6 J
		6 K
		7 D
982515-60060	78	4 A
		4 B
		4 F
	82	5 A
		5 G
		5 H
		6 B
		6 I
		7 B
		7 C
		7 G
		8 G
		8 H
	83	5 A
		5 G
		5 H
		6 B
		6 I
		7 B
		7 C

Parts No.	Fig. No.	Ref. No.
982515-60060	83	7 G
		8 G
		8 H
	85	4 A
		4 B
		4 F
	89	5 A
		5 G
		5 H
		6 B
		6 I
		7 B
		7 C
		7 G
		8 H
982515-60070	82	6 A
		6 G
		6 H
		8 E
		8 F
		8 K
		8 L
		8 M
	83	6 A
		6 G
		6 H
		8 E
		8 F
		8 K
		8 L
		8 M
	89	6 A
		6 G
		6 H
		8 E
		8 F
		8 K
		8 L
		8 M
982515-60080	82	7 A
	83	7 A
	89	7 A
982515-60090	82	8 A
		8 B
		8 C
		8 D
	83	8 A
		8 B
		8 C

Parts No.	Fig. No.	Ref. No.
982515-60090	83	8 D
	89	8 A
		8 B
		8 C
		8 D
982515-60120	82	5 D
		5 E
		5 F
		6 E
		6 F
		6 O
	83	5 D
		5 E
		5 F
		6 E
		6 F
		6 O
	89	5 D
		5 E
		5 F
		6 E
		6 F
		6 O
982515-60130	82	6 M
		6 N
		7 F
	83	6 M
		6 N
		7 F
	89	6 M
		6 N
		7 F
982515-60140	82	7 E
		7 H
		7 I
		7 J
		8 J
	83	7 E
		7 H
		7 I
		7 J
		8 J
	89	7 E
		7 H
		7 I
		7 J
		8 J
982515-60150	82	8 I
		8 N
		8 O

Parts No.	Fig. No.	Ref. No.
982515-60150	82	8 P
	83	8 I
		8 N
		8 O
		8 P
	89	8 I
		8 N
		8 O
		8 P
982515-70400	78	59 A
982515-70401	78	59 A-1
982515-70405	85	59 A
982515-70410	78	59 B
982515-70411	78	59 B-1
982515-70415	85	59 B
982515-70420	78	59 C
982515-70421	78	59 C-1
982515-70425	85	59 C
982515-70430	78	59 D
982515-70431	78	59 D-1
982515-70435	85	59 D
982515-70440	78	59 E
982515-70441	78	59 E-1
982515-70445	85	59 E
982515-70840	82	64 A
982515-70841	83	64 A
982515-70845	89	64 A
982515-70850	82	64 B
982515-70851	83	64 B
982515-70855	89	64 B
982515-70860	82	64 C
982515-70861	83	64 C
982515-70865	89	64 C
982515-70870	82	64 D
982515-70871	83	64 D
982515-70875	89	64 D
982515-70880	82	64 E
982515-70881	83	64 E
982515-70885	89	64 E
982515-70890	82	64 F
		64 G
982515-70891	83	64 F
		64 G
982515-70895	89	64 F
		64 G
982515-70900	82	64 H
		64 I
982515-70901	83	64 H
		64 I
982515-70905	89	64 H

Parts No. Index

Parts No.	Fig. No.	Ref. No.
982515-70905	89	64 I
982515-70910	82	64 J
		64 K
982515-70911	83	64 J
		64 K
982515-70915	89	64 J
		64 K
982515-70920	82	64 L
		64 M
982515-70921	83	64 L
		64 M
982515-70925	89	64 L
		64 M
982515-70930	82	64 N
		64 O
982515-70931	83	64 N
		64 O
982515-70935	89	64 N
		64 O
982515-70940	82	64 P
982515-70941	83	64 P
982515-70945	89	64 P
982515-70950	82	64 Q
982515-70951	83	64 Q
982515-70955	89	64 Q
982515-70960	82	64 R
982515-70961	83	64 R
982515-70965	89	64 R
982515-70970	82	64 S
982515-70971	83	64 S
982515-70975	89	64 S
982515-70980	82	64 T
982515-70981	83	64 T
982515-70985	89	64 T
982515-70990	82	64 U
982515-70991	83	64 U
982515-70995	89	64 U
982515-71000	82	64 V
982515-71001	83	64 V
982515-71005	89	64 V
982515-71010	82	64 W
982515-71011	83	64 W
982515-71015	89	64 W
982515-71020	82	64 X
982515-71021	83	64 X
982515-71025	89	64 X
982515-71030	82	64 Y
982515-71031	83	64 Y
982515-71035	89	64 Y
982515-80320	78	60

Parts No.	Fig. No.	Ref. No.
982515-80320	82	65
	83	65
	85	60
	89	65
982515-90010	82	24 A
	83	24 A
	89	24 A
982515-90020	82	24 B
	83	24 B
	89	24 B
982515-90030	82	24 C
	83	24 C
	89	24 C
982515-90040	82	24 D
	83	24 D
	89	24 D
982515-90050	82	24 E
	83	24 E
	89	24 E
982515-90060	82	24 F
	83	24 F
	89	24 F
982515-90070	82	24 G
	83	24 G
	89	24 G
982515-90080	82	24 H
	83	24 H
	89	24 H
982515-90090	82	24 I
	83	24 I
	89	24 I
982515-90100	82	24 J
	83	24 J
	89	24 J
982515-90110	82	24 K
	83	24 K
	89	24 K
982515-90120	82	24 L
	83	24 L
	89	24 L
982515-90130	82	24 M
	83	24 M
	89	24 M
982515-90140	82	24 N
	83	24 N
	89	24 N
982515-90150	82	24 O
	83	24 O
	89	24 O
982515-90160	82	24 P

Parts No.	Fig. No.	Ref. No.
982515-90160	83	24 P
	89	24 P
982515-90170	82	24 Q
	83	24 Q
	89	24 Q
982515-90180	82	25 A
	83	25 A
	89	25 A
982515-90190	82	25 B
	83	25 B
	89	25 B
982515-90200	82	25 C
	83	25 C
	89	25 C
982515-90210	82	25 D
	83	25 D
	89	25 D
982515-90220	82	25 E
	83	25 E
	89	25 E
982515-90230	82	25 F
	83	25 F
	89	25 F
982515-90240	82	25 G
	83	25 G
	89	25 G
982515-90250	82	25 H
	83	25 H
	89	25 H
982515-90260	82	25 I
	83	25 I
	89	25 I
982515-90270	82	25 J
	83	25 J
	89	25 J
982515-90280	82	25 K
	83	25 K
	89	25 K
982515-90290	82	25 L
	83	25 L
	89	25 L
982515-90300	82	25 M
	83	25 M
	89	25 M
982515-90310	82	25 N
	83	25 N
	89	25 N
982515-90320	82	25 O
	83	25 O
	89	25 O

Parts No.	Fig. No.	Ref. No.
982515-90330	82	25 P
	83	25 P
	89	25 P
982515-90340	82	25 Q
	83	25 Q
	89	25 Q
982515-90350	82	26 A
	83	26 A
	89	26 A
982515-90360	82	26 B
	83	26 B
	89	26 B
982515-90370	82	26 C
	83	26 C
	89	26 C
982515-90380	82	26 D
	83	26 D
	89	26 D
982515-90390	82	26 E
	83	26 E
	89	26 E
982515-90400	82	26 F
	83	26 F
	89	26 F
982515-90410	82	26 G
	83	26 G
	89	26 G
982515-90420	82	26 H
	83	26 H
	89	26 H
982515-90430	82	26 I
	83	26 I
	89	26 I
982515-90440	82	26 J
	83	26 J
	89	26 J
982515-90450	82	26 K
	83	26 K
	89	26 K
982515-90460	82	26 L
	83	26 L
	89	26 L
982515-90470	82	26 M
	83	26 M
	89	26 M
982515-90480	82	26 N
	83	26 N
	89	26 N
982515-90490	82	26 O
	83	26 O

Parts No. Index

Parts No.	Fig. No.	Ref. No.
982515-90490	89	26 O
982515-90500	82	26 P
	83	26 P
	89	26 P
982515-90510	82	26 Q
	83	26 Q
	89	26 Q
982515-90520	82	27 A
	83	27 A
	89	27 A
982515-90530	82	27 B
	83	27 B
	89	27 B
982515-90540	82	27 C
	83	27 C
	89	27 C
982515-90550	82	27 D
	83	27 D
	89	27 D
982515-90560	82	27 E
	83	27 E
	89	27 E
982515-90570	82	27 F
	83	27 F
	89	27 F
982515-90580	82	27 G
	83	27 G
	89	27 G
982515-90590	82	27 H
	83	27 H
	89	27 H
982515-90600	82	27 I
	83	27 I
	89	27 I
982515-90610	82	27 J
	83	27 J
	89	27 J
982515-90620	82	27 K
	83	27 K
	89	27 K
982515-90630	82	27 L
	83	27 L
	89	27 L
982515-90640	82	27 M
	83	27 M
	89	27 M
982515-90650	82	27 N
	83	27 N
	89	27 N
982515-90660	82	27 O

Parts No.	Fig. No.	Ref. No.
982515-90660	83	27 O
	89	27 O
982515-90670	82	27 P
	83	27 P
	89	27 P
982515-90680	82	27 Q
	83	27 Q
	89	27 Q
982517-70100	78	49
	82	55
	83	55
	85	49
	89	55
982518-60240	78	42
	82	48 A
	83	48 A
	85	42
	89	48 A
982518-60270	82	48 B
	83	48 B
	89	48 B
982519-30190	78	63 A
982519-30191	78	63 A-1
982519-30195	85	63 A
982519-30200	78	63 B
982519-30201	78	63 B-1
982519-30205	85	63 B
982519-30210	78	63 C
982519-30211	78	63 C-1
982519-30215	85	63 C
982519-30220	78	63 D
982519-30221	78	63 D-1
982519-30225	85	63 D
982519-30230	78	63 E
982519-30231	78	63 E-1
982519-30235	85	63 E
982519-30240	78	63 F
982519-30241	78	63 F-1
982519-30245	85	63 F
982519-30250	78	63 G
982519-30251	78	63 G-1
982519-30255	85	63 G
982519-30260	78	63 H
982519-30261	78	63 H-1
982519-30265	85	63 H
982519-30270	78	63 I
982519-30271	78	63 I-1
982519-30275	85	63 I
982519-30280	78	64 A
982519-30281	78	64 A-1

Parts No.	Fig. No.	Ref. No.
982519-30285	85	64 A
982519-30290	78	64 B
982519-30291	78	64 B-1
982519-30295	85	64 B
982519-30300	78	64 C
982519-30301	78	64 C-1
982519-30305	85	64 C
982519-30310	78	64 D
982519-30311	78	64 D-1
982519-30315	85	64 D
982519-30320	78	64 E
982519-30321	78	64 E-1
982519-30325	85	64 E
982519-30330	78	64 F
982519-30331	78	64 F-1
982519-30335	85	64 F
982519-30340	78	64 G
982519-30341	78	64 G-1
982519-30345	85	64 G
982519-30350	78	64 H
982519-30351	78	64 H-1
982519-30355	85	64 H
982519-30360	78	64 I
982519-30361	78	64 I-1
982519-30365	85	64 I
982519-30370	78	65 A
982519-30371	78	65 A-1
982519-30375	85	65 A
982519-30380	78	65 B
982519-30381	78	65 B-1
982519-30385	85	65 B
982519-30390	78	65 C
982519-30391	78	65 C-1
982519-30395	85	65 C
982519-30400	78	65 D
		65 D-1
982519-30405	85	65 D
982519-30410	78	65 E
982519-30411	78	65 E-1
982519-30415	85	65 E
982519-30420	78	65 F
982519-30421	78	65 F-1
982519-30425	85	65 F
982519-30430	78	65 G
982519-30431	78	65 G-1
982519-30435	85	65 G
982519-30440	78	65 H
982519-30441	78	65 H-1
982519-30445	85	65 H
982519-30450	78	65 I

Parts No.	Fig. No.	Ref. No.
982519-30451	78	65 I-1
982519-30455	85	65 I
982519-30460	78	66 A
982519-30461	78	66 A-1
982519-30465	85	66 A
982519-30470	78	66 B
982519-30471	78	66 B-1
982519-30475	85	66 B
982519-30480	78	66 C
982519-30481	78	66 C-1
982519-30485	85	66 C
982519-30490	78	66 D
982519-30491	78	66 D-1
982519-30495	85	66 D
982519-30500	78	66 E
982519-30501	78	66 E-1
982519-30505	85	66 E
982519-30510	78	66 F
982519-30511	78	66 F-1
982519-30515	85	66 F
982519-30520	78	66 G
982519-30521	78	66 G-1
982519-30525	85	66 G
982519-30530	78	66 H
982519-30531	78	66 H-1
982519-30535	85	66 H
982519-30540	78	66 I
982519-30541	78	66 I-1
982519-30545	85	66 I
982519-30900	82	1 A
982519-30901	83	1 A
982519-30905	89	1 A
982519-30910	82	1 B
982519-30911	83	1 B
982519-30915	89	1 B
982519-30920	82	1 C
982519-30921	83	1 C
982519-30925	89	1 C
982519-30930	82	1 D
982519-30931	83	1 D
982519-30935	89	1 D
982519-30940	82	1 E
982519-30941	83	1 E
982519-30945	89	1 E
982519-30950	82	1 F
982519-30951	83	1 F
982519-30955	89	1 F
982519-30960	82	1 G
982519-30961	83	1 G
982519-30965	89	1 G

Parts No. Index

Parts No.	Fig. No.	Ref. No.
982519-30970	82	1 H
982519-30971	83	1 H
982519-30975	89	1 H
982519-30980	82	1 I
982519-30981	83	1 I
982519-30985	89	1 I
982519-30990	82	1 J
982519-30991	83	1 J
982519-30995	89	1 J
982519-31000	82	1 K
982519-31001	83	1 K
982519-31005	89	1 K
982519-31010	82	1 L
982519-31011	83	1 L
982519-31015	89	1 L
982519-31020	82	1 M
982519-31021	83	1 M
982519-31025	89	1 M
982519-31030	82	1 N
982519-31031	83	1 N
982519-31035	89	1 N
982519-31040	82	1 O
982519-31041	83	1 O
982519-31045	89	1 O
982519-31050	82	1 P
982519-31051	83	1 P
982519-31055	89	1 P
982519-31060	82	1 Q
982519-31061	83	1 Q
982519-31065	89	1 Q
982519-31070	82	2 A
982519-31071	83	2 A
982519-31075	89	2 A
982519-31080	82	2 B
982519-31081	83	2 B
982519-31085	89	2 B
982519-31090	82	2 C
982519-31091	83	2 C
982519-31095	89	2 C
982519-31100	82	2 D
982519-31101	83	2 D
982519-31105	89	2 D
982519-31110	82	2 E
982519-31111	83	2 E
982519-31115	89	2 E
982519-31120	82	2 F
982519-31121	83	2 F
982519-31125	89	2 F
982519-31130	82	2 G
982519-31131	83	2 G

Parts No.	Fig. No.	Ref. No.
982519-31135	89	2 G
982519-31140	82	2 H
982519-31141	83	2 H
982519-31145	89	2 H
982519-31150	82	2 I
982519-31151	83	2 I
982519-31155	89	2 I
982519-31160	82	2 J
982519-31161	83	2 J
982519-31165	89	2 J
982519-31170	82	2 K
982519-31171	83	2 K
982519-31175	89	2 K
982519-31180	82	2 L
982519-31181	83	2 L
982519-31185	89	2 L
982519-31190	82	2 M
982519-31191	83	2 M
982519-31195	89	2 M
982519-31200	82	2 N
982519-31201	83	2 N
982519-31205	89	2 N
982519-31210	82	2 O
982519-31211	83	2 O
982519-31215	89	2 O
982519-31220	82	2 P
982519-31221	83	2 P
982519-31225	89	2 P
982519-31230	82	2 Q
982519-31231	83	2 Q
982519-31235	89	2 Q
982519-31240	82	3 A
982519-31241	83	3 A
982519-31245	89	3 A
982519-31250	82	3 B
982519-31251	83	3 B
982519-31255	89	3 B
982519-31260	82	3 C
982519-31261	83	3 C
982519-31265	89	3 C
982519-31270	82	3 D
982519-31271	83	3 D
982519-31275	89	3 D
982519-31280	82	3 E
982519-31281	83	3 E
982519-31285	89	3 E
982519-31290	82	3 F
982519-31291	83	3 F
982519-31295	89	3 F
982519-31300	82	3 G

Parts No.	Fig. No.	Ref. No.
982519-31301	83	3 G
982519-31305	89	3 G
982519-31310	82	3 H
982519-31311	83	3 H
982519-31315	89	3 H
982519-31320	82	3 I
982519-31321	83	3 I
982519-31325	89	3 I
982519-31330	82	3 J
982519-31331	83	3 J
982519-31335	89	3 J
982519-31340	82	3 K
982519-31341	83	3 K
982519-31345	89	3 K
982519-31350	82	3 L
982519-31351	83	3 L
982519-31355	89	3 L
982519-31360	82	3 M
982519-31361	83	3 M
982519-31365	89	3 M
982519-31370	82	3 N
982519-31371	83	3 N
982519-31375	89	3 N
982519-31380	82	3 O
982519-31381	83	3 O
982519-31385	89	3 O
982519-31390	82	3 P
982519-31391	83	3 P
982519-31395	89	3 P
982519-31400	82	3 Q
982519-31401	83	3 Q
982519-31405	89	3 Q
982519-31410	82	4 A
982519-31411	83	4 A
982519-31415	89	4 A
982519-31420	82	4 B
982519-31421	83	4 B
982519-31425	89	4 B
982519-31430	82	4 C
982519-31431	83	4 C
982519-31435	89	4 C
982519-31440	82	4 D
982519-31441	83	4 D
982519-31445	89	4 D
982519-31450	82	4 E
982519-31451	83	4 E
982519-31455	89	4 E
982519-31460	82	4 F
982519-31461	83	4 F
982519-31465	89	4 F

Parts No.	Fig. No.	Ref. No.
982519-31470	82	4 G
982519-31471	83	4 G
982519-31475	89	4 G
982519-31480	82	4 H
982519-31481	83	4 H
982519-31485	89	4 H
982519-31490	82	4 I
982519-31491	83	4 I
982519-31495	89	4 I
982519-31500	82	4 J
982519-31501	83	4 J
982519-31505	89	4 J
982519-31510	82	4 K
982519-31511	83	4 K
982519-31515	89	4 K
982519-31520	82	4 L
982519-31521	83	4 L
982519-31525	89	4 L
982519-31530	82	4 M
982519-31531	83	4 M
982519-31535	89	4 M
982519-31540	82	4 N
982519-31541	83	4 N
982519-31545	89	4 N
982519-31550	82	4 O
982519-31551	83	4 O
982519-31555	89	4 O
982519-31560	82	4 P
982519-31561	83	4 P
982519-31565	89	4 P
982519-31570	82	4 Q
982519-31571	83	4 Q
982519-31575	89	4 Q
982590-00010	80	76
	86	14
	90	14
982701-10010	80	1 A
982701-10020	80	1 B
982701-10030	80	1 C
982701-10040	80	1 D
982701-10080	80	2 A
982701-10090	80	2 B
982701-10110	80	41 A
982701-10120	80	41 B
982701-10130	80	41 C
982701-10140	80	41 D
982701-10160	80	42
		44
982701-10170	80	45 A
982701-10180	80	45 B

Parts No. Index

Parts No.	Fig. No.	Ref. No.
982701-10190	80	45 C
982701-10200	80	45 D
982701-10220	80	46 A
982701-10230	80	46 B
982701-10240	80	46 C
982701-10250	80	46 D
982701-10270	80	47 A
982701-10280	80	47 B
982701-10290	80	47 C
982701-10300	80	47 D
982701-10320	80	55 A
982701-10330	80	55 B
982701-10350	80	56
982701-10360	80	57 A
982701-10370	80	57 B
982701-10390	80	58 A
982701-10400	80	58 B
982701-10420	80	59 A
982701-10430	80	59 B
982701-10450	80	60 A
982701-10460	80	60 B
982701-10480	80	61 A
982701-10490	80	61 B
982701-10510	80	62 A
982701-10520	80	62 B
982701-10530	80	63 A
982701-10540	80	63 B
982701-10550	80	64 A
982701-10560	80	64 B
982701-10570	80	65 A
982701-10580	80	65 B
982701-10590	80	66
982701-10600	80	71
982701-10610	80	77
	86	13
	90	13
982701-10620	80	82 A
982701-10630	80	82 B
982701-10640	80	82 C
982701-10650	80	82 D
982701-10710	86	70
	87	64
	90	69
	91	64
X0280210230	15	8
	33	8
X0280630011	15	2
	33	2
X0281003751	15	3
	33	3

Parts No.	Fig. No.	Ref. No.
X0282001531	15	4
	33	4
X0283005050	15	7
	33	7
X0283060061	15	16
	33	16
X0283270140	15	9
	33	9
X0283711420	15	17
	33	17
X0283715030	15	10
	33	10
X0283810040	15	11
	33	11
X0284004910	15	18
	33	18
X0285040631	15	19
	33	19
X0285100460	15	20
	33	20
X0534006460	15	22
	33	22
X0534040320	15	23
	33	23
X0534490120	15	24
		25
	33	24
		25
X0534490230	15	26
		27
	33	26
		27
X0535050620	15	28
	33	28
X0535130241	15	29
	33	29
X0535130320	15	30
	33	30
X0536600401	15	31
	33	31
X9019008651	15	41
	33	41
X9025808001	15	42
	33	42
X9151005141	15	32
	33	32
X9490071810	15	43
	33	43
X9490071970	15	44
	33	44

Parts No.	Fig. No.	Ref. No.
X9490170900	15	33
		34
	33	33
		34
X9490423330	15	45
	33	45
X9490441303	15	35
	33	35
X9490441312	15	36
	33	36
X9490502820	15	37
		38
	33	37
		38
X9490561370	15	46
	33	46
X9490721080	15	12
	33	12
X9491001360	15	5
	33	5
X9491001860	15	6
	33	6
X9491200240	15	47
	33	47
X9491402100	15	39
		40
	33	39
		40
X9491703371	15	13
	33	13
X9491703380	15	48
	33	48
X9491704260	15	14
	33	14
X9491730461	15	21
	33	21
XM08137	16	2
	34	2
	54	2
	74	2
XM08138	16	3
	34	3
	54	3
	74	3
XM08180	16	4
	34	4
	54	4
	74	4
XM17878	16	6
	34	6

Parts No.	Fig. No.	Ref. No.
XM17878	54	6
	74	6
XM27436	16	5
		15
	34	5
		15
	54	5
		15
	74	5
		15
XM36410	16	7
	34	7
	54	7
	74	7
XM37336	16	14
	34	14
	54	14
	74	14
XM72174	16	12
	34	12
	54	12
	74	12
XM72664	16	13
	34	13
	54	13
	74	13
XM82110	16	11
	34	11
	54	11
	74	11
XM82184	16	10
	34	10
	54	10
	74	10
XYSPS4008	16	9
	34	9
	54	9
	74	9