YANMAR

PARTS CATALOG

0CV10-M10402EN

Last update May., 2013

PREFACE

1. This Parts Catalog carries all parts incorporated in YANMAR Model 3TN66E-YL & 3TNA72E-YL engines manufactured since July, 1990.

2. Each illustration corresponds to the parts list on the following page.

3. When ordering parts, clearly write down the engine model and serial number, as well as the name and number of each part in your order sheet. This will help insure reliable delivery of the parts you have ordered.

4. Pub. No. 000Y00V1040 First Published : September, 1990.
Pub. No. 000Y00V1041 First Revised : December, 1991.
Pub. No. 000Y00V1042 Second Revised : March, 1993.

Directions for the Parts Catalog.

1.This Parts Catalog shows both standard and optional parts.
2.Parts may change without prior notice.
3.The following is an example of the Parts Catalog format.

0CF10-G21601 29. FUEL INJECTION PUMP(W/BOOST)

(A)=4JH-DT
(B)=4JH-DTZ
(C)=4JH-DTZP
(D)=4JH-DTZA
(E)=4JH-DTZY
(F)=

① REF.	② LEV.	PARTS NO.	DESCRIPTION	Q'TY (A)	(B)	(C)	(D)	(E)	(F)	③ I	⑤ R
1	1	729595-51390	FUEL INJECTION PUMP	1	1	1	1	1			1
1-1	1	729595-51391	FUEL INJECTION PUMP	1	1	1	1	1		N	1
	(A=E00185)	(B=E00200)									
3	2	26022-060162	SCREW M 6X 16	9	9	9	9	9			
3-1 ④	2	26022-060162	SCREW M 6X 16	4	4	4	4	4		K	
	(A=E00156)	(B=E00156)	(C=E00156) (D=E00156)	(E=E00156)							
4	2	129470-51040	CAMSHAFT	1	1	1	1	1			
5	2	122710-51050	BEARING, ROLLER	2	2	2	2	2			
6	2	129470-51060	RETAINER	1	1	1	1	1			

Remarks
(1) BOOST COMPEMSATOR TYPE. OPTIONAL PART, TO E00155,(4JH-DT, 4JH-DTZ

①Ref. No.

The Ref. No. listed may not be in accordance with the illustration Ref. No.

(Ex.) Illustration No. 1 List Ref No. 1 (Before change) → 1- 1 (After change)

For interchangeable symbols N, R and K, illustrations for new parts may be abbreviated.

②Lev. (Level)

Level indication
The numbers below indicate the level of relativity towards the main part.
1 ----- Main parts (Assembly parts)
2 ----- Sub component included in " 1 ".
3 ----- Sub component included in " 2 ".
Note) Parts that are not for sale are partially illustrated but not listed.

③Interchangeability Symbol

When a part change takes place, one of the following interchangeability symbols is indicated beside the part.

Symbol	Interchangeability	Contents note
N	Old ← Yes / No → New	New Part is interchangeable for Old Part but Old Part is not interchangeable for New Part.
Q	Old ← No / Yes → New	New Part is not interchangeable for Old Part but Old Part is interchangeable for New Part.
R	Old ← Yes / Yes → New	New/ Old Parts are both interchangeable.
S	Old ← No / No → New	New/ Old Parts are both not interchangeable.
W		Part newly added.
Z		Part discontinued.
F		Not interchangeable by a single part but interchangeable together with related parts.
K		Changes only for used parts quantities.

④Effective Machine No.

When a part changes, the effective Machine No. will be indicated in the (A)-(F) column.

Product Symbol	Product No.	Product Symbol	Product No.
C	Clutch No. Compressor No.	F	Machine No. (Agricultural Equip.)
D	Drive No.	M	Machine No.
E	Engine No.		

Note 1) A date may follow the symbol. (Ex.) 1996.01
Note 2) " XXXXX " and " ZZZZZ " are for parts that could not be predicted or for engine models that could not be identified.
Note 3) (A=E00185) is the E (Engine Serial Number) for the column (A) model (in this case 4JH-DT) after the parts design change.

⑤Remarks

Figures or alphabets (symbols) are entered in the remarks column.
The comments (remarks) on parts that are indicated at the bottom of the illustration are the same symbols as those stated above.

Contents

Fig. No.	Fig. Name
3TN66E/A72E-YL	
1.	CYLINDER BLOCK(3TN66E-YL)
2.	CYLINDER BLOCK(3TNA72E-YL)
3.	GEAR HOUSING
4.	MOUNTING FLANGE
5.	LUB.OIL SUMP
6.	CYLINDER HEAD & BONNET
7.	SUCTION MANIFOLD & AIR CLEANER
8.	EXHAUST MANIFOLD
9.	CAMSHAFT & DRIVING GEAR
10.	CRANKSHAFT & PISTON
11.	LUB. OIL SYSTEM
12.	COOLING WATER SYSTEM
13.	FUEL INJECTION DEVICE
14.	FUEL LINE
15.	GOVERNOR
16.	ENGINE STOP DEVICE
17.	STARTING MOTOR
18.	GENERATOR
19.	GASKET SET(OPTIONAL)

Fig. No.	Fig. Name

0CV10-M10402

Fig.1. CYLINDER BLOCK(3TN66E-YL)

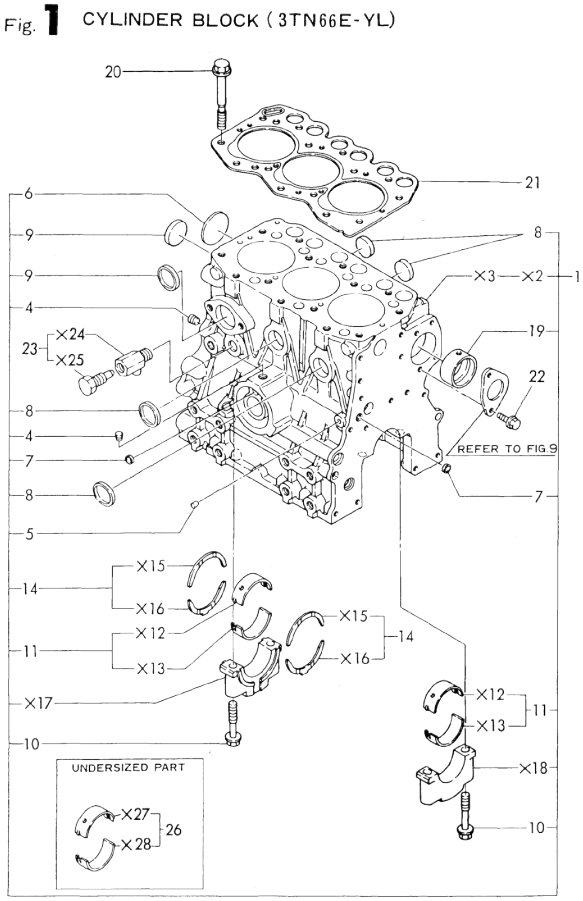

(A)=3TN66E-YL
(B)=3TNA72E-YL
(C)=
(D)=
(E)=
(F)=

No.	Lev.	Parts No.	Description	Q'ty (A)	(B)	(C)	(D)	(E)	(F)	I	R
1	1	719270-01560	BLOCK ASSY, CYLINDER	1							
4	3	124060-01050	PLUG, PT1/8	2							
5	3	27221-060100	PLUG, 6X10	1							
6	3	27231-400000	PLUG 40	1							
7	3	27241-100000	PLUG, 10	2							
8	3	27241-250000	PLUG, 25	4							
9	3	27241-300000	PLUG 30	2							
10	2	119260-02020	BOLT, METAL CAP	8							
11	2	119260-02800	BEARING, MAIN	4							
14	2	119260-02930	BEARING, THRUST	2							
19	2	119260-02410	BUSH, CAMSHAFT	1							
20	1	119260-01200	BOLT, HEAD	14							
21	1	119255-01340	GASKET, HEAD	1							
22	1	26106-060122	BOLT, M6X 12 PLATED	2							
23	1	119620-49290	COCK ASSY, 1/4	1							
26	1	719260-02870	BEARING, 0.25 US	4							1

Remarks
(1) UNDERSIZED(U.S=0.25) PART.

N:Old ←Yes/No→ New. Q:Old ←No/Yes→ New, R:Old ←Yes/Yes→ New. S:Old ←No/No→ New. W:Add. Z:Discontinued. F:Interchangeable by set. K:Q'ty Change

Copyright (C) YANMAR CO., LTD. All RightsReserved.

0CV10-M10402

Fig.2. CYLINDER BLOCK(3TNA72E-YL)

Fig. 2 CYLINDER BLOCK (3TNA72E-YL)

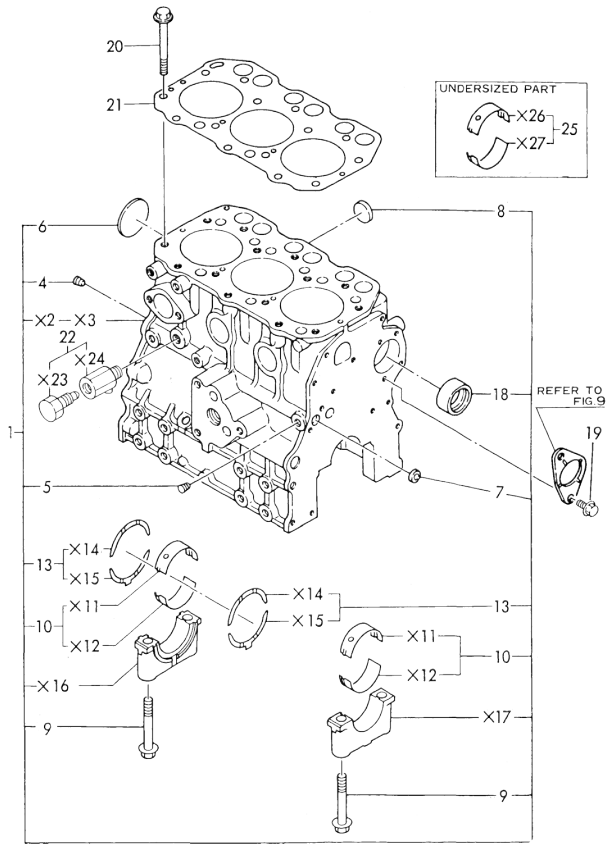

(A)=3TN66E-YL
(B)=3TNA72E-YL
(C)=
(D)=
(E)=
(F)=

No.	Lev.	Parts No.	Description	Q'ty (A)	(B)	(C)	(D)	(E)	(F)	I	R
1	1	719685-01580	BLOCK ASSY, CYLINDER		1						
4	3	119600-01050	PLUG, PT1/4		1						
5	3	23871-010000	PLUG, R01		1						
6	3	27231-450000	PLUG 45		1						
7	3	27241-120000	PLUG, 12		1						
8	3	105311-01090	PLUG, 30		6						
8-1	3	27241-300000	PLUG 30		6					N	
		(B=EXXX)									
9	2	119620-02020	BOLT, METAL CAP		8						
10	2	719620-02800	BEARING, MAIN		4						
13	2	719620-02930	BEARING, THRUST		2						
18	2	119620-02410	BUSH, CAMSHAFT		1						
19	1	26106-060122	BOLT, M6X 12 PLATED		2						
20	1	119620-01200	BOLT, HEAD		14						
21	1	119610-01340	GASKET, HEAD		1						
22	1	119620-49290	COCK ASSY, 1/4		1						
25	1	719620-02870	BEARING, 0.25 US		4						1

Remarks
(1) UNDERSIZED(U.S=0.25) PART.

N:Old $\frac{\text{Yes}}{\text{No}}$ New. Q:Old $\frac{\text{No}}{\text{Yes}}$ New. R:Old $\frac{\text{Yes}}{\text{Yes}}$ New. S:Old $\frac{\text{No}}{\text{No}}$ New. W:Add. Z:Discontinued. F:Interchangeable by set. K:Q'ty Change

Copyright (C) YANMAR CO., LTD. All RightsReserved.

0CV10-M10402

Fig.3. GEAR HOUSING

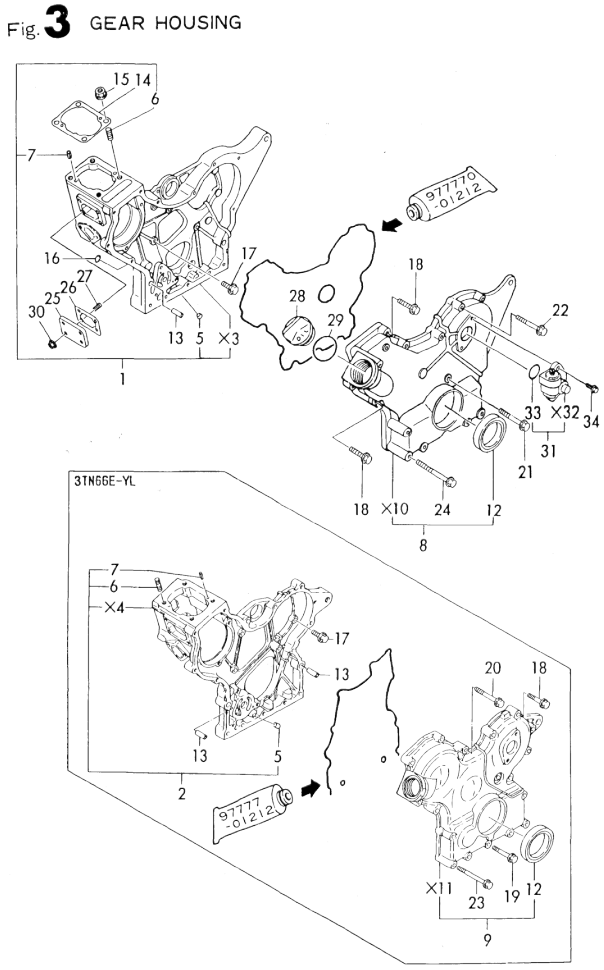

(A)=3TN66E-YL
(B)=3TNA72E-YL
(C)=
(D)=
(E)=
(F)=

No.	Lev.	Parts No.	Description	Q'ty (A)	(B)	(C)	(D)	(E)	(F)	I	R
1	1	119610-01490	CASE ASSY, GEAR		1						
2	1	119260-01490	CASE ASSY, GEAR	1							
5	2	119660-01510	PLUG, 10X14	1	1						
5-1	2 (A=EXXX)	119260-01510	PLUG	1						N	
6	2	121450-01560	STUD, M8X22	4	4						
7	2	22351-040010	PIN, SPRING 4.0X10	2	2						
8	1	119610-01590	COVER ASSY,GEAR CASE		1						
9	1	119260-01590	COVER ASSY,GEAR CASE	1							
12	1	119620-01800	SEAL, OIL	1	1						
13	1	119660-01911	PIPE, KNOCK	4	4						
14	1	119620-01950	SHIM SET, ADJUSTING	1	1						
15	1	194990-22050	NUT, M8	4	4						
16	1	24311-000120	O-RING, 1AP12.0	2	2						
17	1	26106-060162	BOLT, M6X 16 PLATED	5	7						
18	1	26106-060302	BOLT, M6X 30 PLATED	5	8						
19	1	26106-060402	BOLT, M6X 40 PLATED	3							
20	1	26106-060502	BOLT, M6X 50 PLATED	4							
21	1	26106-060602	BOLT, M6X 60 PLATED		1						
22	1	26106-060602	BOLT, M6X 60 PLATED		3						
23	1	26106-060652	BOLT, M6X 65 PLATED	6							
24	1	26106-060802	BOLT, M6X 80 PLATED		6						
25	1	119660-01551	COVER	1	1						
26	1	119660-01562	GASKET	1	1						
27	1	119660-01570	STUD, M6X12	4	4						
28	1	124160-01751	COVER, FILLER	1	1						
29	1	24311-000320	O-RING, 1AP32.0	1	1						
30	1	26366-060002	NUT, M6	4	4						
31	1	129150-91400	GEAR	1	1						
33	2	24341-000240	O-RING, 1AS24.0	1	1						
34	1	26106-060162	BOLT, M6X 16 PLATED	2	2						

N:Old ←Yes/No→ New. Q:Old ←No/Yes→ New. R:Old ←Yes/Yes→ New. S:Old ←No/No→ New. W:Add. Z:Discontinued. F:Interchangeable by set. K:Q'ty Change

Copyright (C) YANMAR CO., LTD. All RightsReserved.

0CV10-M10402

Fig.4. MOUNTING FLANGE

Fig. 4 MOUNTING FLANGE

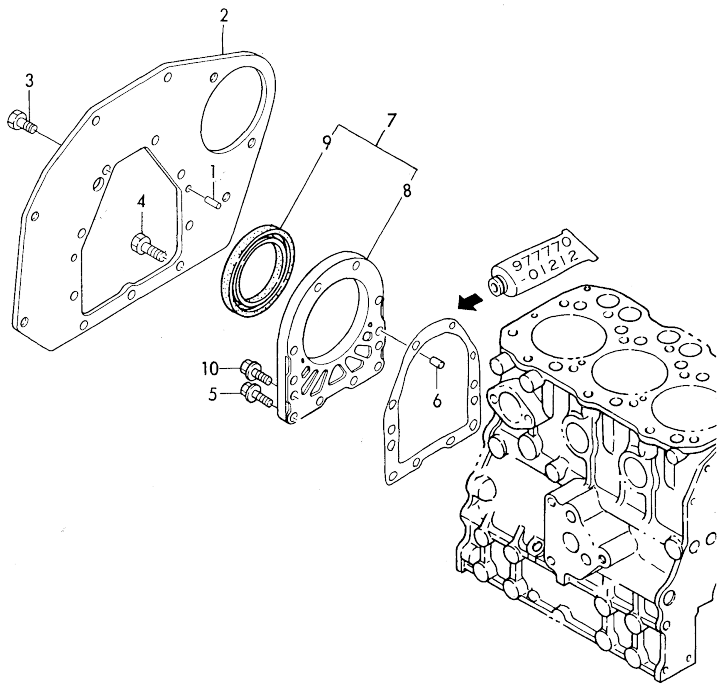

(A)=3TN66E-YL (D)=
(B)=3TNA72E-YL (E)=
(C)= (F)=

No.	Lev.	Parts No.	Description	Q'ty (A)	(B)	(C)	(D)	(E)	(F)	I	R
1	1	129100-01580	PIN, M8X16	2	2						
2	1	119285-01601	FLANGE, MOUNTING	1	1						
2-1	1	119285-01600	FLANGE, MOUNTING	1	1					N	
	(A=E/# 28708)		(B=E/# 54444)								
3	1	26206-100202	BOLT, M10X 20 PLATED	6	6						
4	1	26206-100252	BOLT, M10X 25 PLATED	3	3						
5	1	119285-01580	BOLT, M46X22	4	4						
6	1	119620-01620	PIN, M6X10	2	2						
7	1	119660-01640	CASE ASSY, OIL SEAL	1	1					W	
	(A=E/# 24889)		(B=E/# 42931)								
8	2	119660-01651	CASE, OIL SEAL	1	1						
9	2	124085-02220	SEAL, OIL	1	1						
10	1	26106-060222	BOLT, M6X 22 PLATED	6	6						

N:Old ◄Yes/No► New. Q:Old ◄No/Yes► New. R:Old ◄Yes/Yes► New. S:Old ◄No/No► New. W:Add. Z:Discontinued. F:Interchangeable by set. K:Q'ty Change

Copyright (C) YANMAR CO., LTD. All RightsReserved.

0CV10-M10402

Fig.5. LUB.OIL SUMP

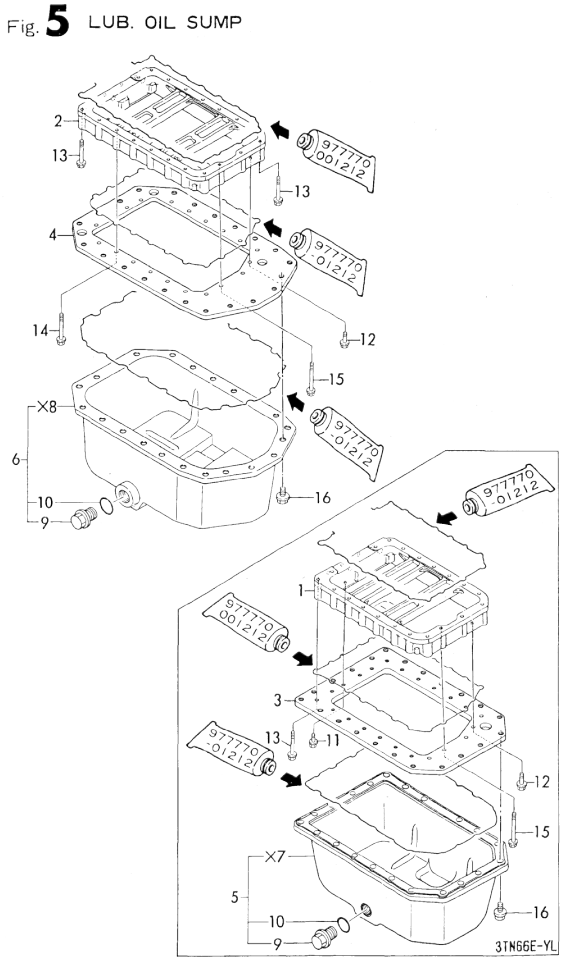

(A)=3TN66E-YL
(B)=3TNA72E-YL
(C)=
(D)=
(E)=
(F)=

No.	Lev.	Parts No.	Description	Q'ty (A)	(B)	(C)	(D)	(E)	(F)	I	R
1	1	119454-01721	SPACER, OIL SUMP	1							
2	1	119600-01722	SPACER, OIL SUMP		1						
3	1	119285-01800	PLATE, OIL SUMP	1							
4	1	119685-01740	PLATE, OIL SUMP		1						
5	1	119810-01770	SUMP ASSY, OIL	1							
6	1	129100-01760	SUMP ASSY, OIL		1						
9	2	171301-01640	PLUG, 22	1	1						
10	2	24341-000240	O-RING, 1AS24.0	1	1						
11	1	26106-060142	BOLT, M6X 14 PLATED	2							
12	1	26106-060202	BOLT, M6X 20 PLATED	1	3						
13	1	26106-060452	BOLT, M6X 45 PLATED	17	3						
14	1	26106-060502	BOLT, M6X 50 PLATED		14						
15	1	26106-060552	BOLT, M6X 55 PLATED	3	3						
16	1	26106-080102	BOLT, M8X 10 PLATED	22	22						

N:Old ←Yes/No→ New. Q:Old ←No/Yes→ New. R:Old ←Yes/Yes→ New. S:Old ←No/No→ New. W:Add. Z:Discontinued. F:Interchangeable by set. K:Q'ty Change

Copyright (C) YANMAR CO., LTD. All RightsReserved.

0CV10-M10402

Fig.6. CYLINDER HEAD & BONNET

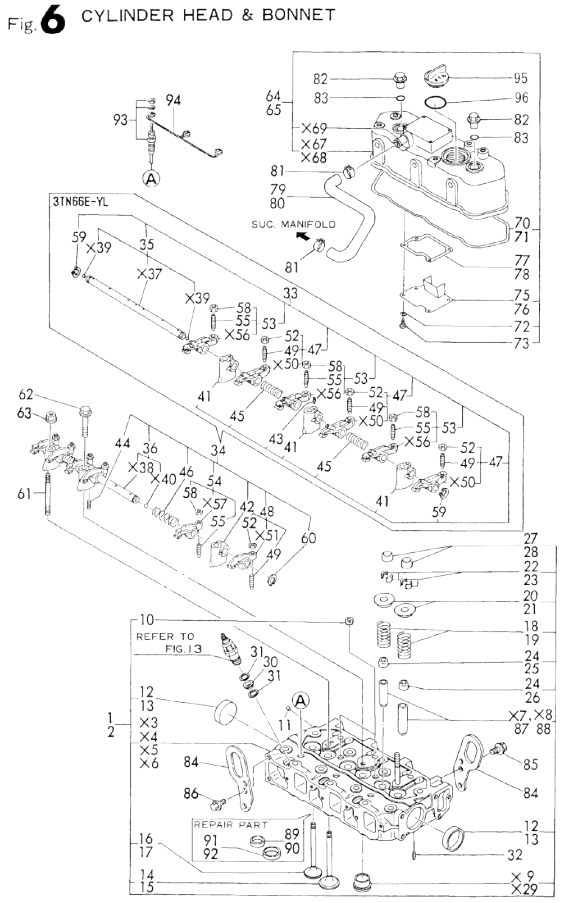

Remarks
(1) REPAIR PART.

(A)=3TN66E-YL (D)=
(B)=3TNA72E-YL (E)=
(C)= (F)=

No.	Lev.	Parts No.	Description	Q'ty (A)	(B)	(C)	(D)	(E)	(F)	I	R
1	1	719260-11700	HEAD ASSY, CYLINDER	1							
2	1	719660-11700	HEAD ASSY, CYLINDER		1						
2-1	1	119629-11700	HEAD ASSY, CYLINDER		1						N
		(B=E/# 63253)									
10	3	121850-11860	PLUG, PT1/4	2	2						
10-1	3	23871-020000	PLUG, R02	2							N
	(A=E/# 28708)										
11	3	27221-050080	PLUG, 5X 8	1	1						
12	3	27241-350000	PLUG, 35	2							
13	3	27241-400000	PLUG, 40		2						
14	2	119260-11100	VALVE, INTAKE	3							
15	2	119620-11100	VALVE, INTAKE		3						
16	2	119260-11110	VALVE, EXHAUST	3							
17	2	119620-11110	VALVE, EXHAUST		3						
18	2	114250-11120	SPRING, VALVE	6							
19	2	119620-11120	SPRING, VALVE		6						
20	2	114250-11180	RETAINER, SPRING	6							
21	2	119620-11180	RETAINER, SPRING		6						
22	2	114250-11190	COTTER	12							
23	2	101158-11190	COTTER		6						
23-1	2	27310-070001	COTTER, 7		6						N
		(B=EXXXXX)									
24	2	119260-11340	SEAL, VALVE STEM	6							
25	2	124160-11340	SEAL, VALVE STEM		3						
26	2	124950-11340	SEAL, VALVE STEM		3						
27	2	104211-11370	CAP, VALVE		6						
28	2	119260-11370	CAP, VALVE	6							
30	1	119600-11450	PROTECTOR, NOZZLE	3	3						
31	1	119600-11460	GASKET, NOZZLE	6	6						
32	1	22351-060012	PIN, SPRING 6.0X12	2	2						
33	1	119260-11200	SUPPORT ASSY, ARM	1							
34	1	119620-11200	SUPPORT ASSY, ARM		1						
35	2	119260-11240	SHAFT ASSY, ROCKER	1							
36	2	119620-11240	SHAFT ASSY, ROCKER		1						
41	2	119260-11260	SUPPORT, ROCKER ARM	3							
42	2	119620-11260	SUPPORT, ROCKER ARM		3						
43	2	119260-11270	SCREW	1							
44	2	26979-050162	SCREW, M5X16		1						
45	2	119260-11280	SPRING	2							
46	2	119620-11280	SPRING		2						
47	2	719260-11650	ARM ASSY, ROCKER	3							
48	2	719620-11650	ARM ASSY, ROCKER		3						
49	3	105010-11230	SCREW, VALVE ADJUST	3	3						
52	3	26756-060002	NUT, LOCK M6	3	3						
53	2	719260-11660	ARM ASSY, ROCKER	3							
54	2	719620-11660	ARM ASSY, ROCKER		3						
55	3	105010-11230	SCREW, VALVE ADJUST	3	3						
58	3	26756-060002	NUT, LOCK M6	3	3						
59	2	22242-000100	RING, 10	2							
60	2	22242-000120	RING, 12		2						
61	1	119620-11350	STUD	2	2						

N:Old ←Yes/No→ New. Q:Old ←No/Yes→ New. R:Old ←Yes/Yes→ New. S:Old ←No/No→ New. W:Add. Z:Discontinued. F:Interchangeable by set. K:Q'ty Change

++ CONTINUE ++

Copyright (C) YANMAR CO., LTD. All RightsReserved.

0CV10-M10402

Fig.6. CYLINDER HEAD & BONNET

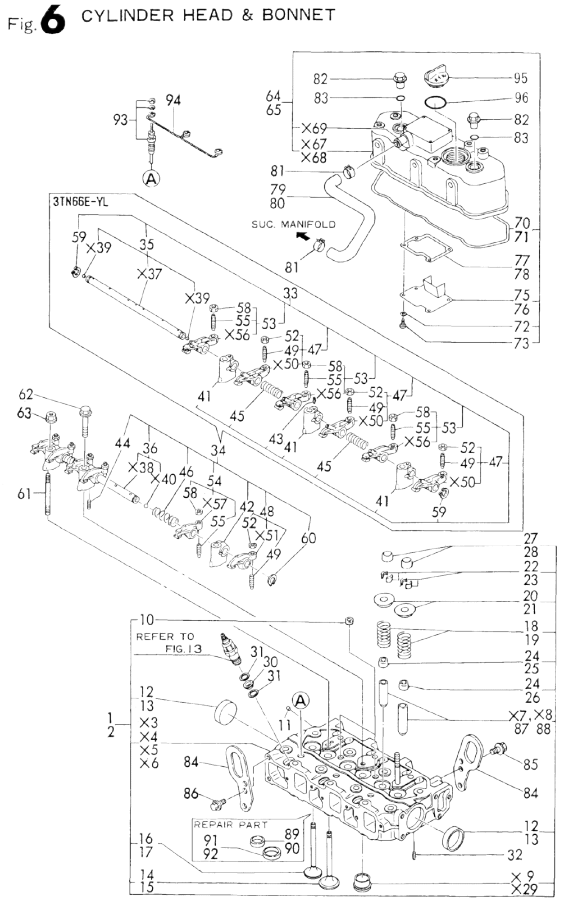

No.	Lev.	Parts No.	Description	Q'ty (A)	(B)	(C)	(D)	(E)	(F)	I	R
				(A)=3TN66E-YL (B)=3TNA72E-YL (C)=			(D)= (E)= (F)=				
62	1	26106-080452	BOLT, M8X 45 PLATED	1	1						
63	1	26366-080002	NUT, M8	2	2						
64	1	719260-11521	BONNET ASSY, HEAD	1							
64-1	1	119260-11330	BONNET ASSY, HEAD	1						N	
	(A=FROM 1ST)										
65	1	719620-11520	BONNET ASSY, HEAD		1						
65-1	1	119620-11330	BONNET ASSY, HEAD		1					N	
			(B=FROM 1ST)								
70	2	119260-11310	GASKET, BONNET	1							
71	2	119620-11310	GASKET, BONNET		1						
72	2	22217-050000	WASHER, SPRING 5	4	4						
73	2	26557-050102	SCREW, M5X10	4	4						
75	2	119260-03020	PLATE, SHELTER	1							
76	2	119620-03020	PLATE, SHELTER		1						
77	2	119260-03030	GASKET	1							
77-1	2	119260-03031	GASKET	1						N	
	(A=FROM 1ST)										
78	2	119620-03031	GASKET		1						
79	1	119285-03140	PIPE , BREATHER	1							
80	1	119685-03140	PIPE , BREATHER		1						
81	1	171008-03990	CLIP, HOSE 18.5	2	2						
82	1	124160-11360	KNOB	2	2						
83	1	24311-000120	O-RING, 1AP12.0	2	2						
84	1	119260-07900	LIFTER	2	2						
85	1	26106-080142	BOLT, M8X 14 PLATED	1	1						
86	1	26106-080142	BOLT, M8X 14 PLATED	2	2						
87	1	119260-11800	GUIDE, VALVE	6							1
88	1	119620-11801	GUIDE, VALVE		6						1
89	1	124190-11090	SEAT, EXHAUST VALVE	3							1
90	1	119620-11090	SEAT, EXHAUST VALVE		3						1
91	1	124190-11080	SEAT, INTAKE VALVE	3							1
92	1	119620-11080	SEAT, INTAKE VALVE		3						1
93	1	129155-77800	PLUG, GLOW	3	3						
94	1	119620-77820	CONNECTOR, GLOW PLUG	1	1						
95	1	124160-01751	COVER, FILLER	1	1						
96	1	24311-000320	O-RING, 1AP32.0	1	1						

Remarks
(1) REPAIR PART.

N:Old ←Yes/No→ New. Q:Old ←No/Yes→ New. R:Old ←Yes/Yes→ New. S:Old ←No/No→ New. W:Add. Z:Discontinued. F:Interchangeable by set. K:Q'ty Change

Copyright (C) YANMAR CO., LTD. All RightsReserved.

0CV10-M10402

Fig.7. SUCTION MANIFOLD & AIR CLEANER

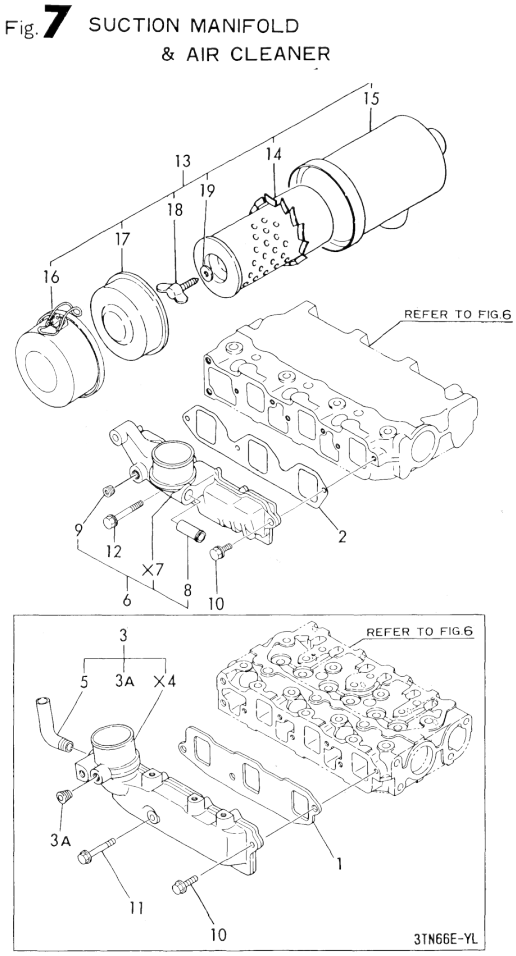

(A)=3TN66E-YL (B)=3TNA72E-YL (C)= (D)= (E)= (F)=

No.	Lev.	Parts No.	Description	Q'ty (A)	(B)	(C)	(D)	(E)	(F)	I	R
1	1	119270-12110	GASKET, MANIFOLD	1							
2	1	119660-12111	GASKET, MANIFOLD		1						
3	1	119285-12730	MANIFOLD ASSY,INTAKE	1							
3A	2	119285-01730	PLUG, NPT1/8	1						W	
	(A=E/# 28708)										
5	2	121500-12790	JOINT, PIPE PT1/4	1							
6	1	119685-12731	MANIFOLD ASSY,INTAKE		1						
8	2	104207-44480	JOINT		1						
9	2	119285-01730	PLUG, NPT1/8		1						
10	1	26106-060162	BOLT, M6X 16 PLATED	2	2						
11	1	26106-060282	BOLT, M6X 28 PLATED	1							
12	1	26106-060452	BOLT, M6X 45 PLATED		1						
13	1	124970-12500	CLEANER ASSY, AIR	1	1						
14	2	124066-12510	ELEMENT	1	1						
14-1	2	121465-12510	ELEMENT	1	1					N	
	(A=E/# 25625)	(B=E/# 54444)									
15	2	121450-12520	BODY, AIR CLEANER	1	1						
15-1	2	124970-12640	BODY, AIR CLEANER	1	1					N	
	(A=E/# 25625)	(B=E/# 54444)									
16	2	121450-12530	PAN ASSY, DUST	1	1						
16-1	2	124970-12660	SUMP ASSY, DUST	1	1					N	
	(A=E/# 25625)	(B=E/# 54444)									
17	2	124064-12670	BAFFLE ASSY	1	1						
17-1	2	124970-12700	RETAINER, ELEMENT	1	1					N	
	(A=E/# 25625)	(B=E/# 54444)									
18	2	124064-12680	BOLT	1	1						
19	2	124064-12690	WASHER	1	1						

N:Old ←Yes/No→ New. Q:Old ←No/Yes→ New, R:Old ←Yes/Yes→ New, S:Old ←No/No→ New. W:Add. Z:Discontinued. F:Interchangeable by set. K:Q'ty Change

Copyright (C) YANMAR CO., LTD. All RightsReserved.

0CV10-M10402

Fig.8. EXHAUST MANIFOLD

Fig. 8 EXHAUST MANIFOLD

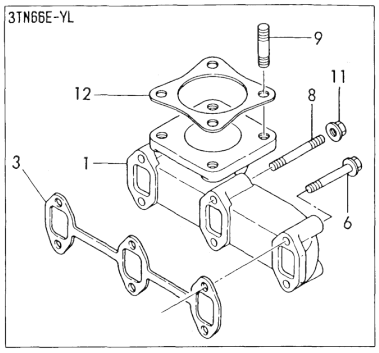

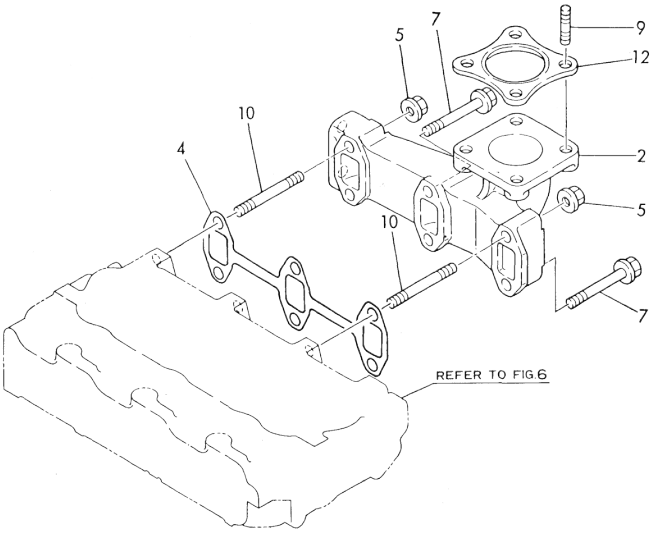

(A)=3TN66E-YL (D)=
(B)=3TNA72E-YL (E)=
(C)= (F)=

No.	Lev.	Parts No.	Description	Q'ty (A)	(B)	(C)	(D)	(E)	(F)	I	R
1	1	119280-13100	MANIFOLD, EXHAUST	1							
1-1	1	119260-13100	MANIFOLD, EXHAUST	1							N
	(A=E/# 31344)										
2	1	119631-13101	MANIFOLD, EXHAUST		1						
2-1	1	119600-13100	MANIFOLD, EXHAUST		1						N
			(B=E/# 63253)								
3	1	119260-13110	GASKET	1							
4	1	119620-13110	GASKET		1						
5	1	194990-22050	NUT, M8		2						
6	1	26106-060402	BOLT, M6X 40 PLATED	4							
6-1	1	26106-060352	BOLT, M6X 35 PLATED	4							N
	(A=E/# 31344)										
7	1	26106-080402	BOLT, M8X 40 PLATED		4						
8	1	26216-060402	STUD, M6X 40	2							
9	1	26216-080222	STUD, M8X 22	4	4						
10	1	26216-080552	STUD, M8X 55		2						
11	1	26366-060002	NUT, M6	2							
12	1	124701-11910	GASKET, SILENCER	1	1						
12-1	1	124701-11911	GASKET, SILENCER	1	1						R
	(A=E/# 24889)		(B=E/# 42931)								

N:Old ←Yes/No→ New. Q:Old ←No/Yes→ New. R:Old ←Yes/Yes→ New. S:Old ←No/No→ New. W:Add. Z:Discontinued. F:Interchangeable by set. K:Q'ty Change

Copyright (C) YANMAR CO., LTD. All RightsReserved.

0CV10-M10402

Fig.9. CAMSHAFT & DRIVING GEAR

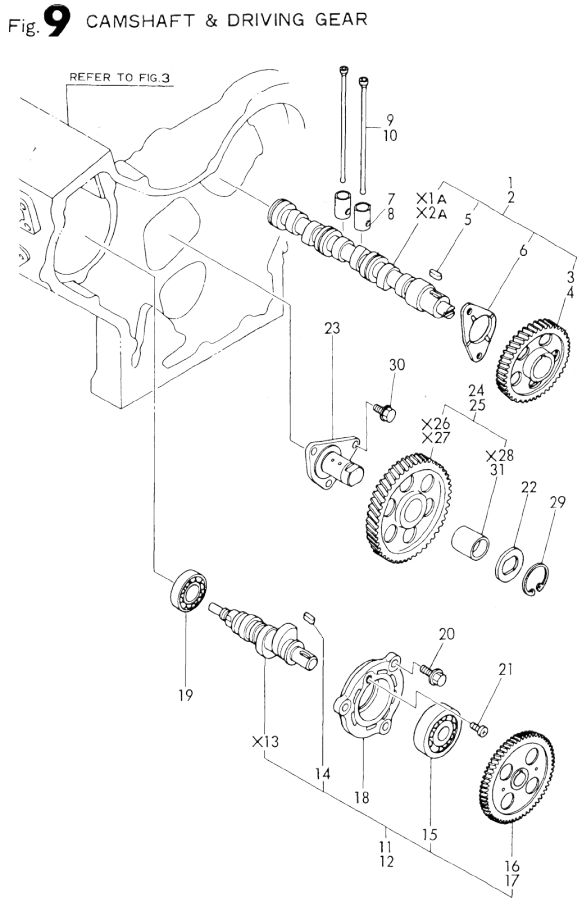

(A)=3TN66E-YL (D)=
(B)=3TNA72E-YL (E)=
(C)= (F)=

No.	Lev.	Parts No.	Description	Q'ty (A)	(B)	(C)	(D)	(E)	(F)	I	R
1	1	119260-14580	CAMSHAFT ASSY	1						W	
	(A=E/# 28708)										
2	1	119629-14580	CAMSHAFT ASSY		1					W	
		(B=E/# 54444)									
3	2	119260-14100	GEAR, CAMSHAFT	1							
4	2	119620-14100	GEAR, CAMSHAFT		1						
5	2	22512-040120	KEY, 4X 12	1	1						
6	2	119620-02450	BEARING, THRUST	1	1						
7	1	119260-14200	TAPPET	6							
8	1	119620-14200	TAPPET		6						
9	1	119260-14400	ROD, PUSH	6							
10	1	119620-14400	ROD, PUSH		6						
11	1	119225-14200	CAM ASSY	1						W	
	(A=EXXX)										
12	1	719660-14590	CAMSHAFT		1					W	
		(B=EXXX)									
14	2	22512-040120	KEY, 4X 12	1	1						
15	2	24102-063034	BEARING, BALL 6303U	1	1						
16	2	119260-25900	GEAR, PUMP	1							
17	2	119660-25902	GEAR, PUMP		1						
18	1	119660-01821	BEARING, FUEL CAM	1	1						
19	1	24101-062034	BEARING, BALL 6203	1	1						
20	1	26106-060162	BOLT, M6X 16 PLATED	3	3						
21	1	26587-080102	SCREW, M8X10	1	1						
22	1	119660-25022	RETAINER	1	1						
23	1	119660-25052	SHAFT, IDLE	1	1						
24	1	119260-25100	GEAR ASSY, IDLE	1							
25	1	119620-25102	GEAR ASSY, IDLE		1						
29	1	22242-000200	RING, 20	1	1						
30	1	26106-060122	BOLT, M6X 12 PLATED	3	3						
31	1	119620-25912	BUSH	1	1						1

Remarks
(1) REPAIR PART.

N:Old ←Yes/No→ New. Q:Old ←No/Yes→ New. R:Old ←Yes/Yes→ New. S:Old ←No/No→ New. W:Add. Z:Discontinued. F:Interchangeable by set. K:Q'ty Change

Copyright (C) YANMAR CO., LTD. All RightsReserved.

0CV10-M10402

Fig.10. CRANKSHAFT & PISTON

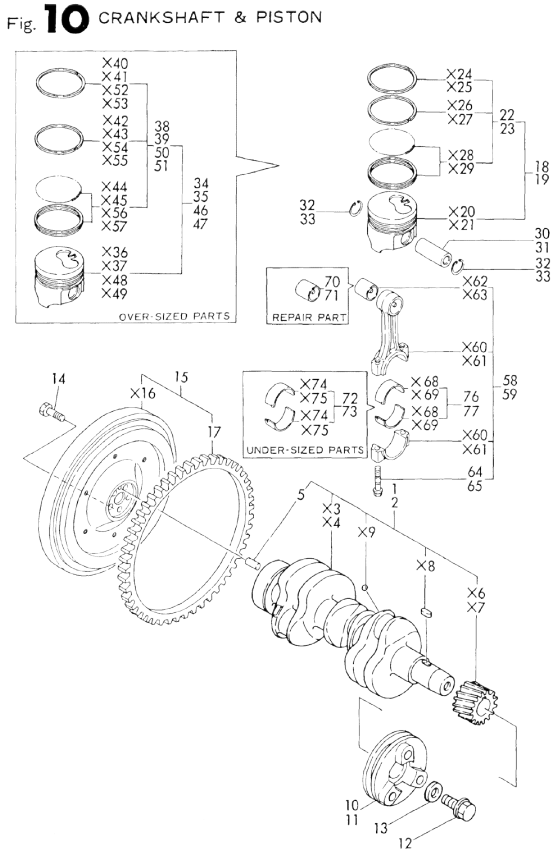

Remarks
(1) OVERSIZED(O.S=0.25) PART.
(2) OVERSIZED(O.S=0.50) PART.
(3) REPAIR PART.
(4) UNDERSIZED(U.S=0.25) PART.

(A)=3TN66E-YL (D)=
(B)=3TNA72E-YL (E)=
(C)= (F)=

No.	Lev.	Parts No.	Description	Q'ty (A)	(B)	(C)	(D)	(E)	(F)	I	R
1	1	719260-21700	CRANKSHAFT ASSY	1							
2	1	719660-21700	CRANKSHAFT ASSY		1						
5	2	129100-01580	PIN, M8X16	1	1						
10	1	119260-21650	V-PULLEY	1							
11	1	119660-21651	V-PULLEY		1						
12	1	119621-21680	BOLT, FLANGE 12X1.25	1	1						
13	1	119620-21941	WASHER	1	1						
14	1	119620-21500	BOLT, FLYWHEEL	5	5						
15	1	119385-21580	FLYWHEEL ASSY	1	1						
17	2	124060-21600	GEAR, RING	1	1						
18	1	119285-22091	PISTON ASSY	3							
19	1	119685-22090	PISTON ASSY		3						
22	2	719285-22500	RING SET, PISTON	3							
23	2	719685-22500	RING SET, PISTON		3						
30	1	119260-22300	PIN, PISTON	3							
31	1	119620-22300	PIN, PISTON		3						
32	1	22252-000200	RING, 20	6							
33	1	22252-000210	RING, 21		6						
34	1	119285-22821	PISTON ASSY, 0.25 OS	3							1
35	1	119685-22820	PISTON ASSY, 0.25 OS		3						1
38	2	719285-22541	RING SET, 0.25 OS	3							1
39	2	719685-22540	RING SET, 0.25 OS		3						1
46	1	119285-22131	PISTON ASSY, 0.50 OS	3							2
47	1	119685-22130	PISTON ASSY, 0.50 OS		3						2
50	2	719285-22401	RING SET, 0.50 OS	3							2
51	2	719685-22400	RING SET, 0.50 OS		3						2
58	1	719260-23100	ROD ASSY, CONNECTING	3							
59	1	719620-23100	ROD ASSY, CONNECTING		3						
64	2	119260-23200	BOLT, CONNECTING ROD	6							
65	2	105225-23200	BOLT, CONNECTING ROD		6						
70	1	119260-23910	BEARING, PISTON PIN	3							3
71	1	119620-23910	BEARING, PISTON PIN		3						3
72	1	719260-23610	BEARING ASSY, 0.25	3							4
73	1	719620-23610	BEARING ASSY, 0.25		3						4
76	1	719260-23600	BEARING, CRANK PIN	3							
77	1	719260-23600	BEARING, CRANK PIN		3						

N:Old ←Yes/No→ New. Q:Old ←No/Yes→ New. R:Old ←Yes/Yes→ New. S:Old ←No/No→ New. W:Add. Z:Discontinued. F:Interchangeable by set. K:Q'ty Change

Copyright (C) YANMAR CO., LTD. All RightsReserved.

0CV10-M10402

Fig.11. LUB. OIL SYSTEM

Fig. 11 LUB. OIL SYSTEM

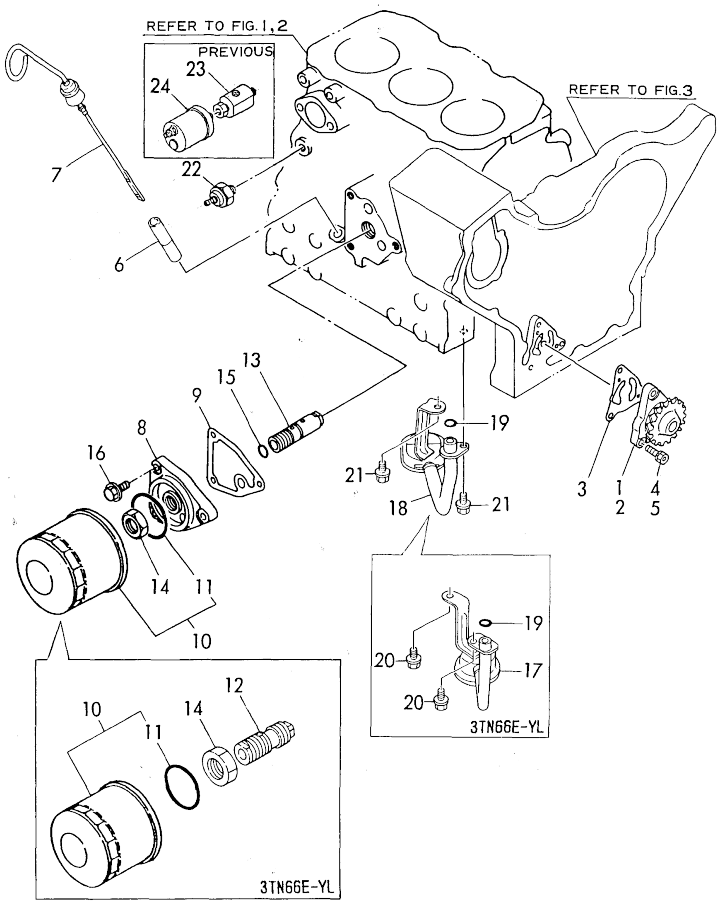

(A)=3TN66E-YL (D)=
(B)=3TNA72E-YL (E)=
(C)= (F)=

No.	Lev.	Parts No.	Description	Q'ty (A)	(B)	(C)	(D)	(E)	(F)	I	R
1	1	119285-32000	PUMP ASSY, LUB. OIL	1							
2	1	119660-32001	PUMP ASSY, OIL		1						
3	1	119660-32020	GASKET, PUMP	1	1						
4	1	26013-060202	BOLT, M6X 20	3							
4-1	1	26450-060202	BOLT, M6X 20	3						N	
	(A=E/# 28708)										
5	1	26450-060202	BOLT, M6X 20		3						
6	1	121520-34810	GUIDE, DIPSTICK	1	1						
7	1	119600-34820	DIPSTICK, OIL	1	1						
8	1	119660-35102	BRACKET, FILTER		1						
9	1	119660-35113	GASKET		1						
10	1	119660-35150	FILTER, LUB. OIL	1	1						
11	2	124450-35110	O-RING	1	1						
12	1	119225-35300	VALVE ASSY,OIL PRESS	1							
13	1	119660-35300	VALVE ASSY, CONTROL		1						
14	1	129150-35350	NUT	1	1						
15	1	24311-000160	O-RING, 1AP16.0		1						
16	1	26106-080202	BOLT, M8X 20 PLATED		3						
17	1	119260-35081	PIPE, OIL INLET	1							
18	1	119600-35091	PIPE ASSY, OIL INLET		1						
19	1	24311-000120	O-RING, 1AP12.0	1	1						
20	1	26106-060122	BOLT, M6X 12 PLATED	2							
21	1	26106-060102	BOLT, M6X 10 PLATED		2						
22	1	124160-39450	SWITCH, 0.5KG	1	1						
23	1	171375-39600	DAMPER ASSY	1	1					Z	
	(A=E/# 31344)		(B=E/# 63253)								
24	1	144626-91560	SENSOR	1	1					Z	
	(A=E/# 31344)		(B=E/# 63253)								

N:Old ←Yes/No→ New. Q:Old ←No/Yes→ New. R:Old ←Yes/Yes→ New. S:Old ←No/No→ New. W:Add. Z:Discontinued. F:Interchangeable by set. K:Q'ty Change

Copyright (C) YANMAR CO., LTD. All RightsReserved.

0CV10-M10402

Fig.12. COOLING WATER SYSTEM

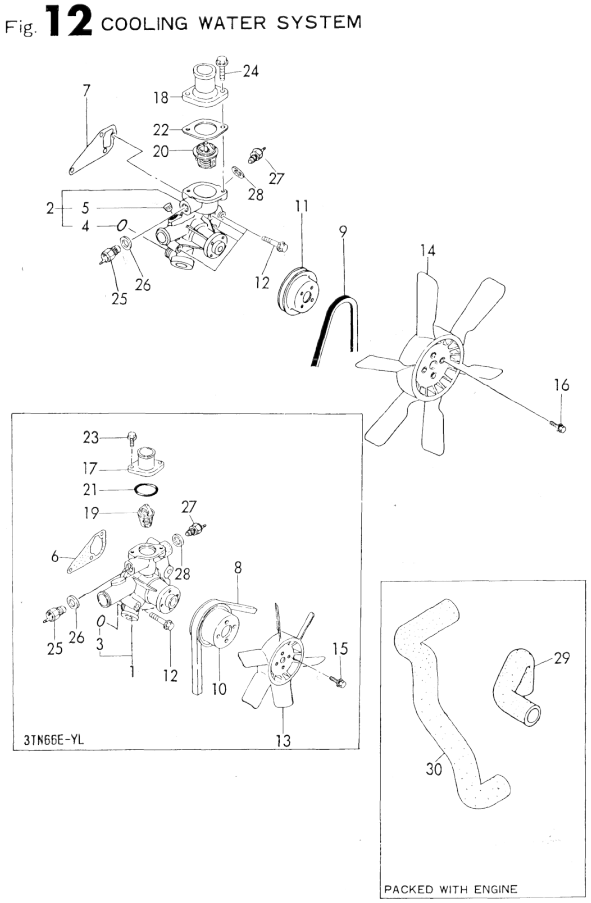

(A)=3TN66E-YL (D)=
(B)=3TNA72E-YL (E)=
(C)= (F)=

No.	Lev.	Parts No.	Description	Q'ty (A)	(B)	(C)	(D)	(E)	(F)	I	R
1	1	119260-42000	PUMP ASSY, WATER	1							
1-1	1	119260-42001	PUMP ASSY, WATER	1						N	
	(A=FROM 1ST)										
2	1	119660-42004	PUMP ASSY, WATER		1						
3	2	119225-42320	O-RING	1							
4	2	119620-42320	O-RING		1						
5	2	23871-030000	PLUG, R03		1						
6	1	119260-42020	GASKET, WATER PUMP	1							
7	1	119620-42020	GASKET, WATER PUMP		1						
8	1	119225-42290	V-BELT, FM34.0	1							
8-1	1	104514-42780	V-BELT, HM33	1						N	
	(A=FROM 1ST)										
9	1	119640-42290	V-BELT, FM36.5		1						
10	1	119620-42350	V-PULLEY	1							
11	1	119660-42350	V-PULLEY		1						
12	1	26106-080452	BOLT, M8X 45 PLATED	3	4						
13	1	119225-44740	FAN, COOLING D=275	1							
14	1	121465-44740	FAN, COOLING		1						
15	1	26014-060142	BOLT, M6X 14	4							
16	1	26106-060122	BOLT, M6X 12 PLATED		4						
17	1	119260-49530	COVER, THERMOSTAT	1							
18	1	129350-49530	COVER, THERMOSTAT		1						
19	1	119260-49800	THERMOSTAT, 71	1							
20	1	129350-49800	THERMOSTAT, 71		1						
21	1	24321-000350	O-RING, 1AG35.0	1							
22	1	129350-49541	GASKET		1						
23	1	26106-060182	BOLT, M6X 18 PLATED	2							
24	1	26106-080202	BOLT, M8X 20 PLATED		2						
25	1	121250-44901	SWITCH, 110	1	1						
26	1	124465-44950	GASKET, 16	1	1						
27	1	124250-49351	SENSOR	1	1						
27-1	1	121450-42450	PLUG, M16		1					N	
	(A=E/# 31344)		(B=E/# 63253)								
28	1	129150-49360	GASKET	1	1						
28-1	1	124465-44950	GASKET, 16	1	1					N	
	(A=E/# 31344)		(B=E/# 63253)								
29	1	119645-49010	PIPE, WATER	1	1						1
30	1	119645-49020	PIPE, WATER	1	1						1

Remarks
(1) PACKED WITH ENGINE.

N:Old ←Yes/No→ New. Q:Old ←No/Yes→ New. R:Old ←Yes/Yes→ New. S:Old ←No/No→ New. W:Add. Z:Discontinued. F:Interchangeable by set. K:Q'ty Change

Copyright (C) YANMAR CO., LTD. All RightsReserved.

0CV10-M10402

Fig.13. FUEL INJECTION DEVICE

Fig. **13** FUEL INJECTION DEVICE

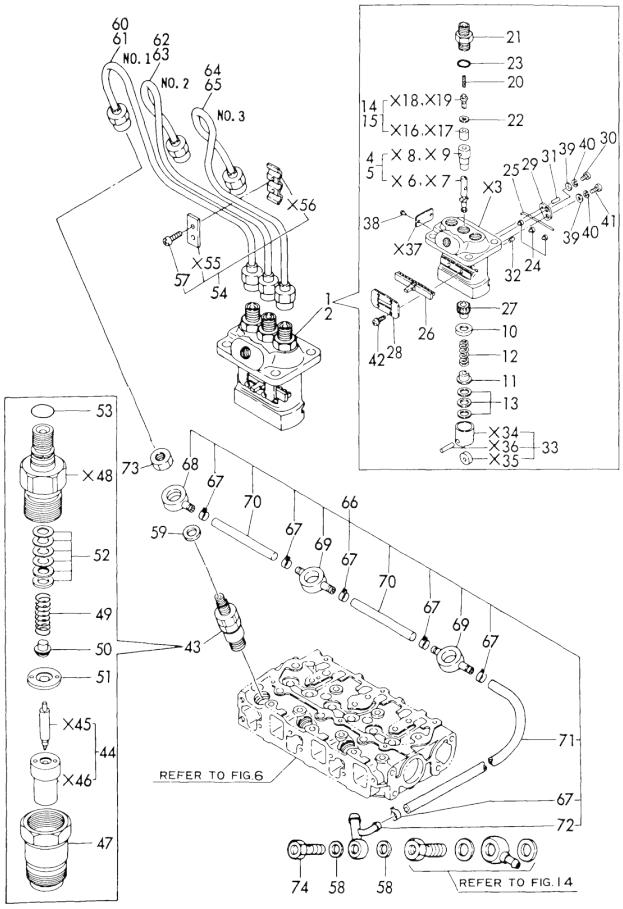

(A)=3TN66E-YL (D)=
(B)=3TNA72E-YL (E)=
(C)= (F)=

No.	Lev.	Parts No.	Description	Q'ty (A)	(B)	(C)	(D)	(E)	(F)	I	R
1	1	719225-51100	PUMP ASSY, INJECTION	1							
2	1	719621-51100	PUMP ASSY, INJECTION		1						
4	2	119225-51100	PLUNGER ASSY	3							
5	2	119620-51101	PLUNGER ASSY		3						
10	2	119620-51170	RETAINER, SPRING A	3	3						
11	2	119620-51180	RETAINER, SPRING B	3	3						
12	2	119620-51190	SPRING, PLUNGER	3	3						
13	2	119620-51250	SHIM SET	3	3						
14	2	119225-51300	VALVE ASSY, DELIVERY	3							
15	2	119620-51300	VALVE ASSY, DELIVERY		3						
20	2	105546-51330	SPRING, DELIVERY	3	3						
21	2	119620-51340	HOLDER, DELIVERY	3	3						
22	2	119620-51350	GASKET	3	3						
23	2	119620-51370	O-RING	3	3						
24	2	119620-51450	PIECE	3	3						
25	2	119620-51461	PIN	1	1						
26	2	119660-51500	RACK, CONTROL	1	1						
27	2	119620-51510	PINION	3	3						
28	2	119660-51530	RETAINER, RACK	1	1						
29	2	119620-51650	PLATE	2	2						
30	2	119620-51660	SCREW	2	2						
31	2	119620-51670	PIN	2	2						
32	2	119620-51680	PIN	1	1						
33	2	119620-51700	TAPPET ASSY	3	3						
38	2	102210-07990	RIVET	2	2						
39	2	22137-040000	WASHER, 4	2	2						
40	2	22217-040000	WASHER, SPRING 4	2	2						
41	2	26022-040082	SCREW, M4X 8	4	4						
42	2	26587-040102	SCREW, M4X10	2	2						
43	1	719620-53100	VALVE ASSY,INJECTION	3	3						
44	2	119620-53000	VALVE ASSY,INJECTION	3	3						
47	2	119620-53080	NUT, NOZZLE	3	3						
49	2	119620-53120	SPRING, NOZZLE	3	3						
50	2	114250-53130	SEAT, SPRING	3	3						
51	2	119620-53140	SPACER, VALVE STOP	3	3						
52	2	114250-53400	SHIM SET	3	3						
53	2	129155-61830	O-RING, S10	3	3						
53-1	2	129155-51580	O-RING	3	3						N
	(A=E/# 31344)		(B=E/# 63253)								
54	1	129150-59120	RETAINER, PIPE	1	1						
57	2	129150-59130	BOLT, M4X12	2	2						
58	1	23414-080012	GASKET, 8X1.0	2	2						
59	1	23414-140000	GASKET, 14X1.0	3	3						
60	1	119225-59810	PIPE ASSY, INJECTION	1							
61	1	119620-59811	PIPE ASSY, INJECTION		1						
62	1	119260-59820	PIPE ASSY, INJECTION	1							
63	1	119620-59821	PIPE ASSY, INJECTION		1						
64	1	119260-59830	PIPE ASSY, INJECTION	1							
65	1	119620-59831	PIPE ASSY, INJECTION		1						
66	1	119642-59540	PIPE ASSY, RETURN	1	1						
67	2	124066-59100	CLIP, HOSE 8	6	6						

N:Old ◄Yes/No► New. Q:Old ◄No/Yes► New. R:Old ◄Yes/Yes► New. S:Old ◄No/No► New. W:Add. Z:Discontinued. F:Interchangeable by set. K:Q'ty Change

++ CONTINUE ++

Copyright (C) YANMAR CO., LTD. All RightsReserved.

0CV10-M10402

Fig.13. FUEL INJECTION DEVICE

Fig. **13** FUEL INJECTION DEVICE

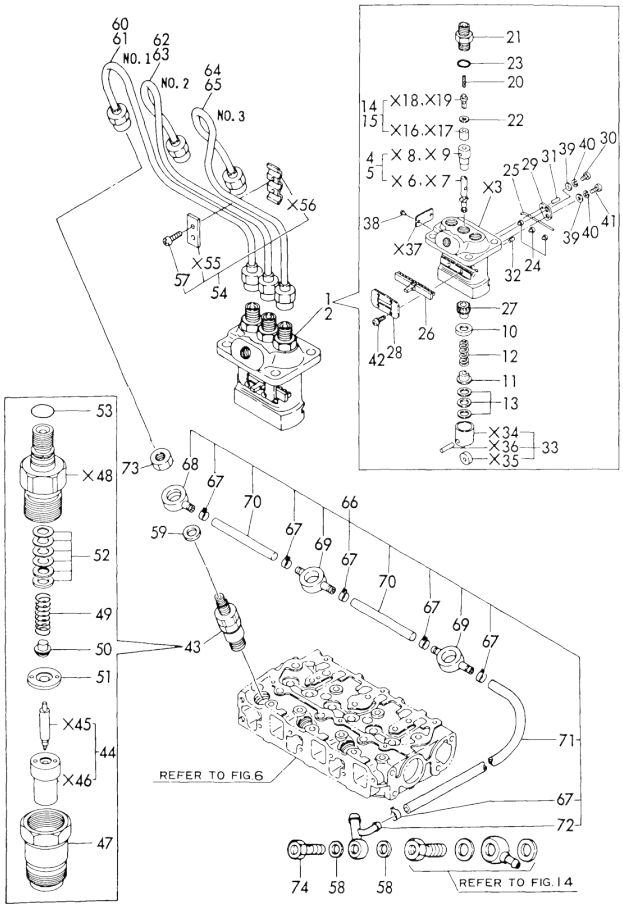

(A)=3TN66E-YL (D)=
(B)=3TNA72E-YL (E)=
(C)= (F)=

No.	Lev.	Parts No.	Description	Q'ty (A)	(B)	(C)	(D)	(E)	(F)	I	R
68	2	119260-59520	JOINT	1	1						
69	2	119260-59530	JOINT	2	2						
70	2	105025-59550	PIPE, FUEL RETURN	2	2						
71	2	119642-59550	PIPE, FUEL RETURN	1	1						
72	2	119642-59570	JOINT, OVER FLOW	1	1						
73	1	119620-59700	NUT, NOZZLE	3	3						
74	1	124550-59820	BOLT, PIPE JOINT M8	1	1						

N:Old ←Yes/No→ New. Q:Old ←No/Yes→ New. R:Old ←Yes/Yes→ New. S:Old ←No/No→ New. W:Add. Z:Discontinued. F:Interchangeable by set. K:Q'ty Change

Copyright (C) YANMAR CO., LTD. All RightsReserved.

0CV10-M10402

Fig.14. FUEL LINE

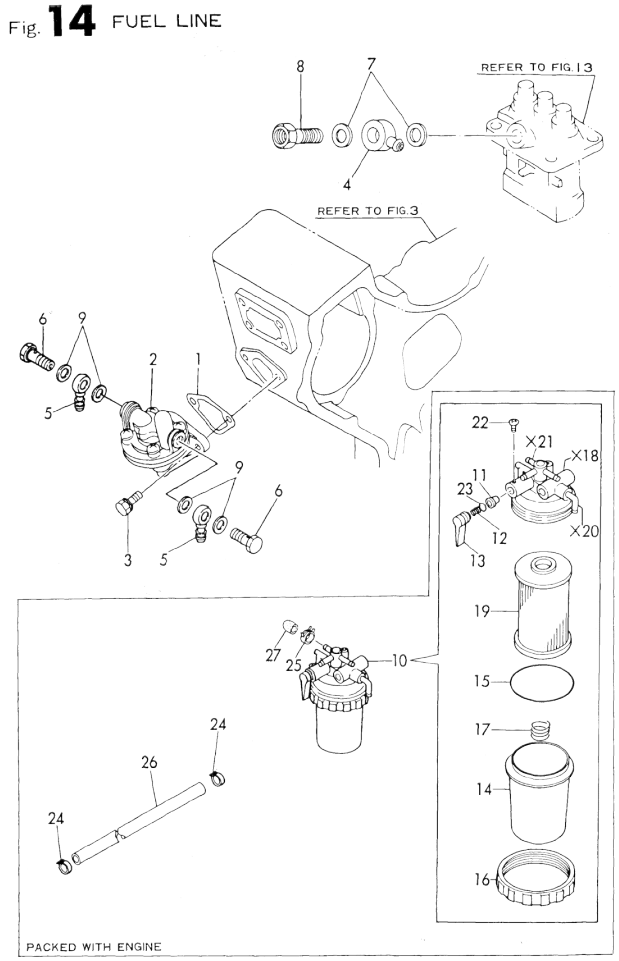

(A)=3TN66E-YL (D)=
(B)=3TNA72E-YL (E)=
(C)= (F)=

No.	Lev.	Parts No.	Description	Q'ty (A)	(B)	(C)	(D)	(E)	(F)	I	R
1	1	121520-01851	GASKET	1	1						
2	1	119600-52021	PUMP ASSY, FUEL FEED	1	1						
2-1	1	121520-01860	COVER		1					N	
	(A=E/# 31344)	(B=E/# 63253)									
3	1	26014-060202	BOLT, M6X 20	2	2						
3-1	1	26106-060162	BOLT, M6X 16 PLATED		2					N	
	(A=E/# 31344)	(B=E/# 63253)									
4	1	101304-59020	JOINT, PIPE 12	1	1						
5	1	104264-59030	JOINT, PIPE 8	2	2						
6	1	105582-59150	BOLT, PIPE JOINT	2	2						
7	1	104200-59170	GASKET, 12	2	2						
8	1	119650-59200	BOLT, PIPE JOINT M12	1	1						
9	1	23414-080012	GASKET, 8X1.0	4	4						
10	1	119632-55620	FILTER ASSY, FUEL	1	1						
11	2	104200-55321	VALVE, TAPER	1	1						
12	2	104200-55330	SPRING, VALVE	1	1						
13	2	119810-55340	LEVER	1	1						
14	2	121254-55510	COVER	1	1						
15	2	102103-55520	O-RING	1	1						
16	2	110250-55610	RING, RETAINING	1	1						
17	2	121250-55620	SPRING	1	1						
19	2	124550-55700	FILTER, FUEL L=90	1	1						
22	2	104200-55750	SCREW, M4	1	1						
23	2	24311-240100	O-RING, 1AP10A	1	1						
24	1	124766-59050	CLIP, HOSE 12	8	8						
25	1	124066-59100	CLIP, HOSE 8	1	1						
26	1	105225-59520	PIPE, FUEL	1	1						
27	1	129150-59580	CAP	1	1						

N:Old ◄Yes/No► New. Q:Old ◄No/Yes► New. R:Old ◄Yes/Yes► New. S:Old ◄No/No► New. W:Add. Z:Discontinued. F:Interchangeable by set. K:Q'ty Change

Copyright (C) YANMAR CO., LTD. All RightsReserved.

0CV10-M10402

Fig.15. GOVERNOR

Fig. **15** GOVERNOR

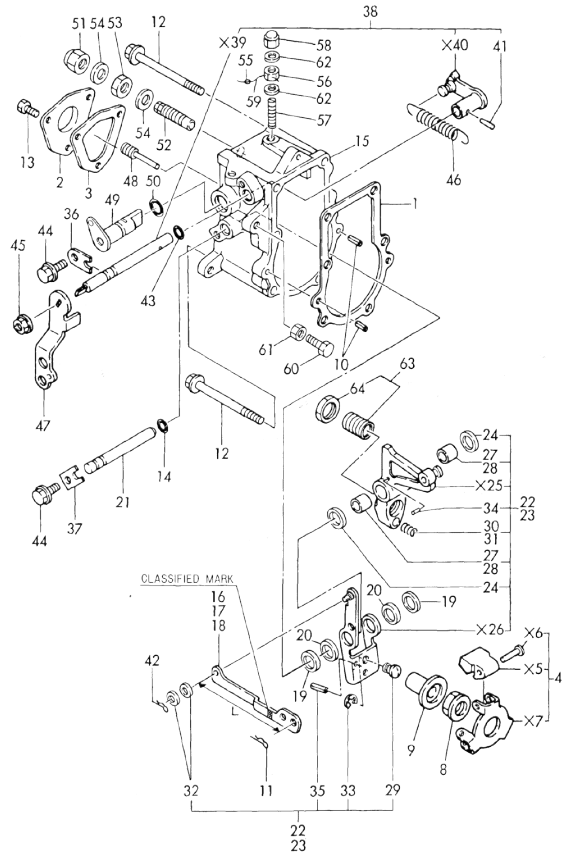

Remarks
(1) SELECTIVE PART.

(A)=3TN66E-YL (D)=
(B)=3TNA72E-YL (E)=
(C)= (F)=

No.	Lev.	Parts No.	Description	Q'ty (A)	(B)	(C)	(D)	(E)	(F)	I	R
1	1	119660-61052	GASKET	1	1						
2	1	119660-61060	COVER, GOVERNOR CASE	1	1						
3	1	119660-61071	GASKET	1	1						
4	1	119600-61200	WEIGHT ASSY,GOVERNOR	1	1						
8	1	119660-61300	NUT	1	1						
9	1	119660-61341	SLEEVE	1	1						
10	1	22351-040010	PIN, SPRING 4.0X10	2	2						
11	1	22360-060000	PIN, SNAP 6	1	1						
12	1	26106-060702	BOLT, M6X 70 PLATED	6	6						
13	1	26116-050102	BOLT, M5X 10 PLATED	3	3						
14	1	129155-51280	O-RING, S6	1	1						
15	1	119660-61013	CASE, GOVERNOR	1	1						
16	1	119660-61121	LINK, NO MARK	1	1						1
17	1	119660-61140	LINK, MARK :2	1	1						1
18	1	119660-61150	LINK, MARK :3	1	1						1
19	1	119660-61460	SHIM SET	1	1						
20	1	129155-61480	SPACER ASSY	2	2						
21	1	119660-61491	SHAFT	1	1						
22	1	119600-61500	LEVER ASSY, GOVERNOR		1						
23	1	119656-61500	LEVER ASSY, GOVERNOR	1							
24	2	174307-51700	SHIM SET	2	2						
27	2	121450-61520	BEARING, NEEDLE 8	2							
28	2	129155-61530	BUSH		2						
29	2	119600-61540	SHIFTER	1	1						
30	2	119660-61651	SPRING, STARTING	1							
31	2	119600-61650	SPRING, STARTING		1						
32	2	22117-040000	WASHER, 4	2	2						
32-1	2	22117-040000	WASHER, 4	1						K	
	(A=E/# 28708)										
33	2	22272-000040	RING, E- 4	1	1						
34	2	22351-020004	PIN, SPRING 2.0X 4	1	1						
35	2	22351-030014	PIN, SPRING 3.0X14	1	1						
36	1	119600-61900	RETAINER, SHAFT	1	1						
37	1	119660-61901	RETAINER, SHAFT	1	1						
38	1	119621-66091	SHAFT ASSY	1	1						
41	2	22322-030160	PIN, TAPER 3X16	1	1						
42	1	22360-040000	PIN, SNAP 4	1	1						
43	1	24341-000070	O-RING, 1AS7.0	1	1						
44	1	26106-060102	BOLT, M6X 10 PLATED	2	2						
45	1	194990-22050	NUT, M8	1	1						
46	1	119600-66020	SPRING, REGULATOR	1	1						
47	1	119621-66051	LEVER, REGULATOR	1	1						
48	1	124250-03640	SCREW	1	1						
49	1	119643-66560	LEVER, STOP	1	1						
50	1	24311-240100	O-RING, 1AP10A	1	1						
51	1	129100-61930	NUT, CAP	1	1						
52	1	119600-66530	LIMITER ASSY, FUEL	1	1						
53	1	124772-66750	NUT, LOCK M12	1	1						
54	1	43400-500450	SEAL WASHER 12S	2	2						
55	1	135210-61090	LEAD	1	1						
56	1	124550-66370	NUT, M6	1	1						

N:Old ←Yes/No→ New. Q:Old ←No/Yes→ New. R:Old ←Yes/Yes→ New. S:Old ←No/No→ New. W:Add. Z:Discontinued. F:Interchangeable by set. K:Q'ty Change

++ CONTINUE ++

Copyright (C) YANMAR CO., LTD. All RightsReserved.

0CV10-M10402

Fig.15. GOVERNOR

Fig. **15** GOVERNOR

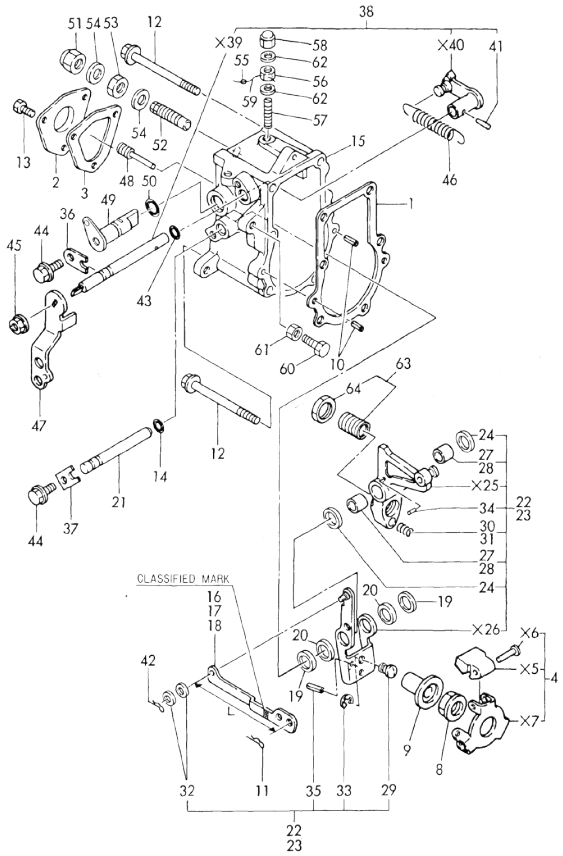

(A)=3TN66E-YL
(B)=3TNA72E-YL
(C)=
(D)=
(E)=
(F)=

No.	Lev.	Parts No.	Description	Q'ty (A)	(B)	(C)	(D)	(E)	(F)	I	R
57	1	121575-66830	SCREW	1	1						
58	1	119600-66840	NUT, CAP	1	1						
59	1	22451-060000	WIRE, 0.6	1	1						
60	1	26116-060304	BOLT, M6X 30 PLATED	1	1						
61	1	26756-060002	NUT, LOCK M6	1	1						
62	1	43400-500400	SEAL WASHER 6	2	2						
63	1	119600-66720	ANGLEICH ASSY	1	1						
64	2	129155-61590	NUT, LOCK	1	1						

Remarks
(1) SELECTIVE PART.

N:Old $\xleftarrow[\text{No}]{\text{Yes}}$ New. Q:Old $\xleftarrow[\text{Yes}]{\text{No}}$ New, R:Old $\xleftarrow[\text{Yes}]{\text{Yes}}$ New. S:Old $\xleftarrow[\text{No}]{\text{No}}$ New. W:Add. Z:Discontinued. F:Interchangeable by set. K:Q'ty Change

Copyright (C) YANMAR CO., LTD. All RightsReserved.

0CV10-M10402

Fig.16. ENGINE STOP DEVICE

Fig. **16** ENGINE STOP DEVICE

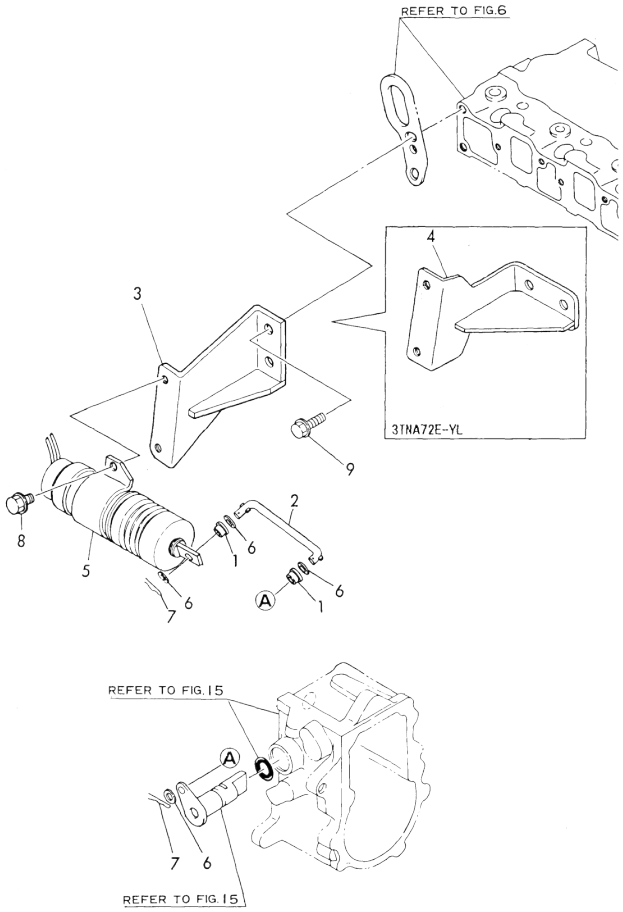

(A)=3TN66E-YL
(B)=3TNA72E-YL
(C)=
(D)=
(E)=
(F)=

No.	Lev.	Parts No.	Description	Q'ty (A)	(B)	(C)	(D)	(E)	(F)	I	R
1	1	119245-66400	BUSH	2	2						
2	1	119643-66532	LINK, SOLENOID	1	1						
3	1	119241-66541	BRACKET, SOLENOID	1							
4	1	119643-66541	BRACKET, SOLENOID		1						
5	1	129155-66800	SOLENOID	1	1						
6	1	22137-040000	WASHER, 4	4	4						
7	1	22360-040000	PIN, SNAP 4	2	2						
8	1	26106-060102	BOLT, M6X 10 PLATED	2	2						
9	1	26106-080182	BOLT, M8X 18 PLATED	2	2						

N:Old ←Yes/No→ New. Q:Old ←No/Yes→ New, R:Old ←Yes/Yes→ New. S:Old ←No/No→ New. W:Add. Z:Discontinued. F:Interchangeable by set. K:Q'ty Change

Copyright (C) YANMAR CO., LTD. All RightsReserved.

0CV10-M10402

Fig.17. STARTING MOTOR

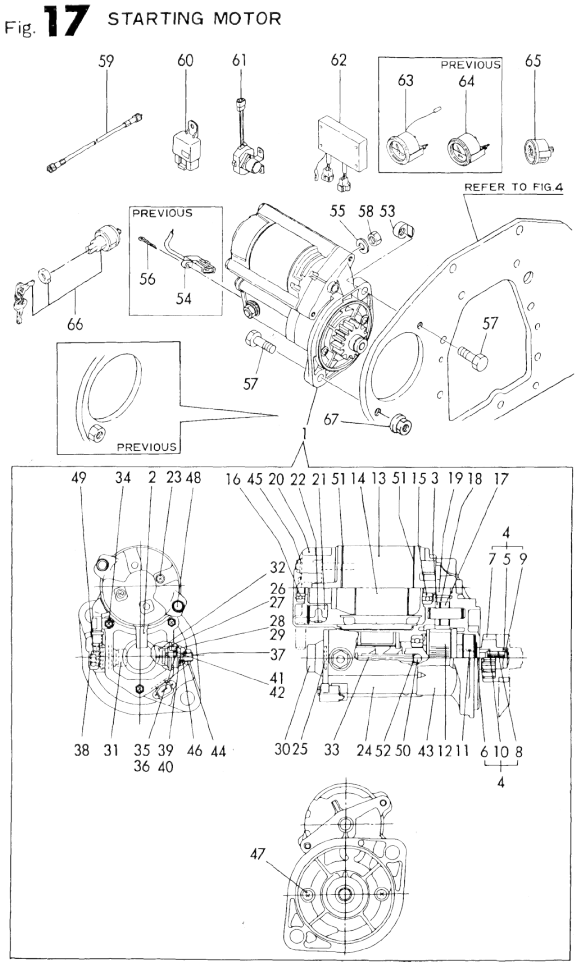

(A)=3TN66E-YL (D)=
(B)=3TNA72E-YL (E)=
(C)= (F)=

No.	Lev.	Parts No.	Description	Q'ty (A)	(B)	(C)	(D)	(E)	(F)	I	R
1	1	121120-77011	STARTER	1	1						
2	2	X0280620480	COVER	1	1						
3	2	X0280630011	RETAINER	1	1						
4	2	X0280992381	CLUTCH KIT	1	1						
5	3	X0280210230	NUT	1	1						
6	3	X0283270140	RETAINER	1	1						
7	3	X0283711770	PINION	1	1						
8	3	X0283810040	SHAFT	1	1						
9	3	X9490721080	RING	1	1						
10	3	X9491703371	SPRING, COIL	1	1						
11	3	X9491704260	SPRING	1	1						
12	3	121120-77930	CASE ASSY, STARTER	1	1						
13	2	X0281003770	YOKE ASSY	1	1						
14	2	X0282002320	HOUSING ASSY	1	1						
15	3	X9491002590	BALL BEARING	1	1						
16	3	X9491002760	BALL BEARING	1	1						
17	2	X0283060061	ROLLER	5	5						
18	2	X0283711420	PINION	1	1						
19	2	X0283712360	PINION	1	1						
20	2	X0285011600	FRAME	1	1						
21	2	X0285100750	HOLDER ASSY, BRUSH	1	1						
22	3	X9491730461	SPRING	1	1						
23	2	X0289030010	SCREW	2	2						
24	2	X0534006470	SWITCH ASSY, MAGNET.	1	1						
25	3	X0534040320	GASKET	1	1						
26	3	X0534490120	BUSH	1	1						
27	3	X0534490120	BUSH	1	1						
28	3	X0534490230	BUSH	1	1						
29	3	X0534490230	BUSH	1	1						
30	3	X0535050620	COVER	1	1						
31	3	X0535130241	PLATE (B)	1	1						
32	3	X0535130320	PLATE (A)	1	1						
33	3	X0536600401	PLUNGER	1	1						
34	3	X9151005141	BOLT W/WASHER	3	3						
35	3	X9490170900	WASHER	1	1						
36	3	X9490170900	WASHER	1	1						
37	3	X9490441303	BOLT	1	1						
38	3	X9490441312	BOLT	1	1						
39	3	X9490502820	NUT	1	1						
40	3	X9490502820	NUT	1	1						
41	3	X9491402100	O-RING	1	1						
42	3	X9491402100	O-RING	1	1						
43	2	X1284000710	HOUSING	1	1						
44	2	X9019008651	NUT	1	1						
45	2	X9025806001	WASHER	2	2						
46	2	X9025808001	WASHER	1	1						
47	2	X9490071970	SCREW W/WASHER	2	2						
48	2	X9490422570	BOLT	2	2						
49	2	X9490561370	NUT	1	1						
50	2	X9491200240	BALL	1	1						
51	2	X9491403700	O-RING	2	2						

N:Old $\frac{\text{Yes}}{\text{No}}$ New. Q:Old $\frac{\text{No}}{\text{Yes}}$ New. R:Old $\frac{\text{Yes}}{\text{Yes}}$ New. S:Old $\frac{\text{No}}{\text{No}}$ New. W:Add. Z:Discontinued. F:Interchangeable by set. K:Q'ty Change

++ CONTINUE ++

Copyright (C) YANMAR CO., LTD. All RightsReserved.

Fig.17. STARTING MOTOR

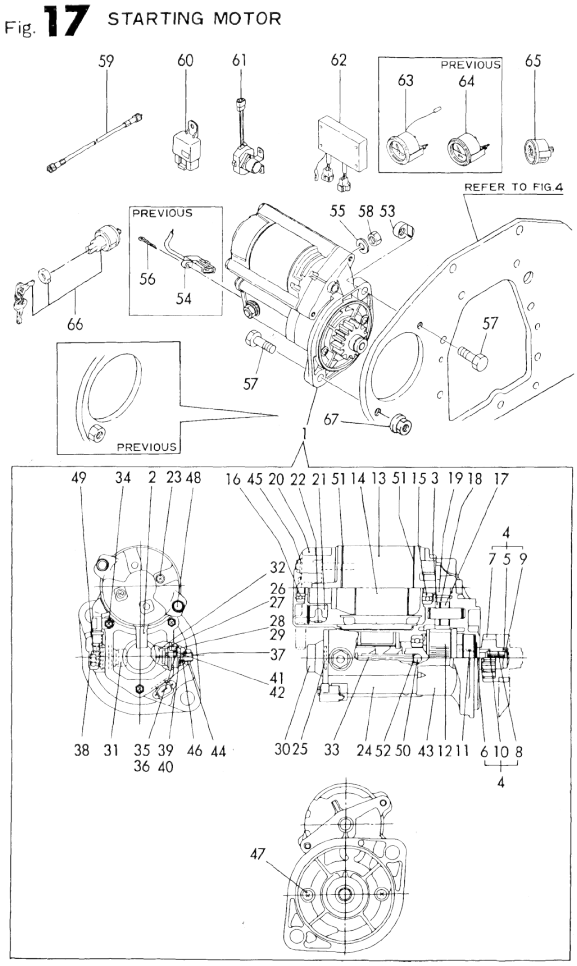

(A)=3TN66E-YL (D)=
(B)=3TNA72E-YL (E)=
(C)= (F)=

No.	Lev.	Parts No.	Description	Q'ty (A)	(B)	(C)	(D)	(E)	(F)	I	R
52	2	X9491703380	SPRING	1	1						
53	1	119285-77050	NUT	1	1						
54	1	119643-77900	CONNECTOR, STARTER	1	1						Z
	(A=E/# 28708)	(B=E/# 54444)									
55	1	22217-080000	WASHER, SPRING 8	1	1						
56	1	22411-200250	COTTER PIN 2.0X 25	1	1						Z
	(A=E/# 28708)	(B=E/# 54444)									
57	1	26156-120302	BOLT, M12X 30 PLATED	2	2						
58	1	26756-080002	NUT, LOCK M8	1	1						
59	1	194145-56901	CABLE, HOUR-METER	1	1						
60	1	119247-77100	RELAY, SAFETY	1	1						
61	1	171051-77100	RELAY, SAFETY	1	1						
62	1	171440-77801	RELAY, EMERGENCY	1	1						
63	1	171010-77850	THERMOSTAT	1	1						Z
	(A=E/# 31344)	(B=E/# 63252)									
64	1	171090-91010	GAUGE	1	1						Z
	(A=E/# 31344)	(B=E/# 63252)									
65	1	171080-91100	TACHOMETER	1	1						
66	1	121400-91251	SWITCH, STARTER	1	1						
67	1	26376-120002	NUT, M12	1	1						W
	(A=E/# 28708)	(B=E/# 54444)									

N:Old $\frac{\text{Yes}}{\text{No}}$ New. Q:Old $\frac{\text{No}}{\text{Yes}}$ New. R:Old $\frac{\text{Yes}}{\text{Yes}}$ New. S:Old $\frac{\text{No}}{\text{No}}$ New. W:Add. Z:Discontinued. F:Interchangeable by set. K:Q'ty Change

Copyright (C) YANMAR CO., LTD. All RightsReserved.

0CV10-M10402

Fig.18. GENERATOR

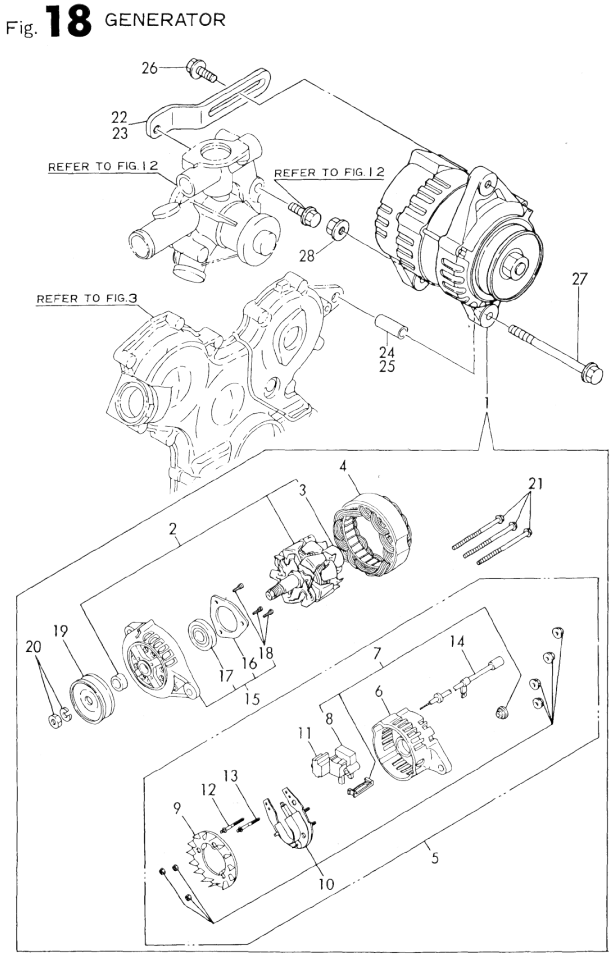

(A)=3TN66E-YL (D)=
(B)=3TNA72E-YL (E)=
(C)= (F)=

No.	Lev.	Parts No.	Description	Q'ty (A)	(B)	(C)	(D)	(E)	(F)	I	R
1	1	119836-77200	GENERATOR	1	1						
2	2	119836-77700	ROTOR ASSY	1	1						
3	3	119836-77850	BALL BEARING	1	1						
4	2	119836-77710	STARTER ASSY	1	1						
5	2	119836-77721	COVER ASSY, REAR	1	1						
6	3	119836-77730	COVER, REAR	1	1						
7	3	119836-77741	BRUSH ASSY,REGULATOR	1	1						
8	4	119836-77750	BRUSH ASSY	1	1						
9	3	119836-77760	GUIDE, FAN SIDE	1	1						
10	3	119836-77770	DIODE ASSY	1	1						
11	3	119836-77780	CONDENSER	1	1						
12	3	119836-77871	BOLT (1)	1	1						
13	3	119836-77880	BOLT (2)	1	1						
14	3	119836-77890	WIRE ASSY, LEAD	1	1						
15	2	119836-77790	COVER ASSY, FRONT	1	1						
16	3	119836-77800	RETAINER, BEARING	1	1						
17	3	119836-77840	BALL BEARING	1	1						
18	3	119836-77860	SCREW KID	1	1						
19	2	119836-77810	PULLEY	1	1						
20	2	119836-77820	NUT ASSY, PULLEY	1	1						
21	2	119836-77830	BOLT, THROUGH	3	3						
22	1	119225-77330	ADJUSTER	1							
23	1	119660-77330	ADJUSTER		1						
23-1	1	119621-77331	ADJUSTER		1					N	
		(B=E/# 61731)									
24	1	129150-77340	SPACER	1							
25	1	119621-77340	PIECE, DISTANCE		1						
26	1	26106-080182	BOLT, M8X 18 PLATED	1	1						
27	1	26106-081052	BOLT, M8X105 PLATED	1	1						
28	1	26366-080002	NUT, M8	1	1						

N:Old ←Yes/No→ New. Q:Old ←No/Yes→ New. R:Old ←Yes/Yes→ New. S:Old ←No/No→ New. W:Add. Z:Discontinued. F:Interchangeable by set. K:Q'ty Change

Copyright (C) YANMAR CO., LTD. All RightsReserved.

0CV10-M10402

Fig.19. GASKET SET(OPTIONAL)

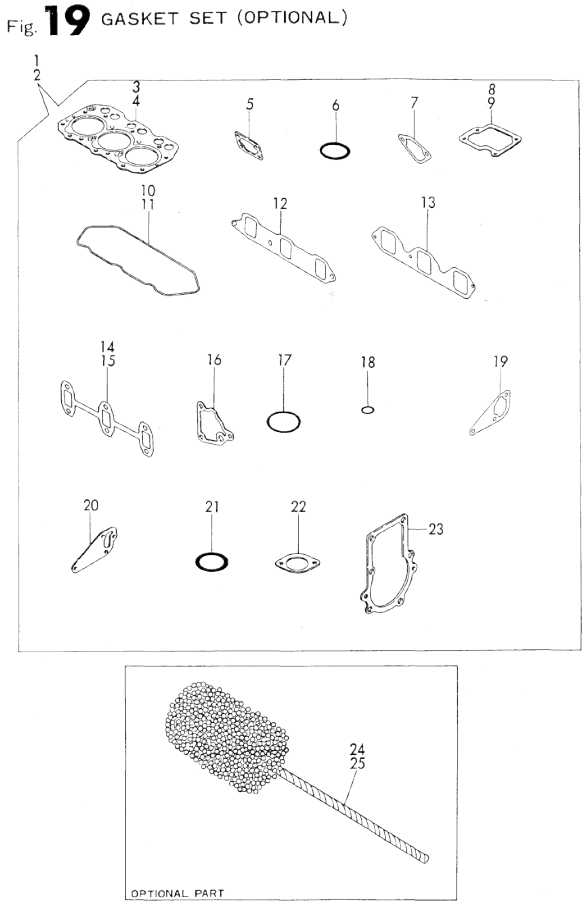

(A)=3TN66E-YL (D)=
(B)=3TNA72E-YL (E)=
(C)= (F)=

No.	Lev.	Parts No.	Description	Q'ty (A)	(B)	(C)	(D)	(E)	(F)	I	R
1	1	719285-92600	GASKET SET	1							1
2	1	719685-92601	GASKET SET		1						1
3	2	119225-01340	GASKET, HEAD	1							
4	2	119610-01340	GASKET, HEAD		1						
5	2	119660-01562	GASKET	1	1						
6	2	24311-000320	O-RING, 1AP32.0	2	2						
7	2	121520-01851	GASKET	1	1						
8	2	119260-03030	GASKET	1							
8-1	2	119260-03031	GASKET	1						N	
	(A=FROM 1ST)										
9	2	119620-03031	GASKET		1						
10	2	119260-11310	GASKET, BONNET	1							
11	2	119620-11310	GASKET, BONNET		1						
12	2	119270-12110	GASKET, MANIFOLD	1							
13	2	119660-12111	GASKET, MANIFOLD		1						
14	2	119260-13110	GASKET	1							
15	2	119620-13110	GASKET		1						
16	2	119660-35113	GASKET		1						
17	2	124450-35110	O-RING	1	1						
18	2	24311-000160	O-RING, 1AP16.0		1						
19	2	119260-42020	GASKET, WATER PUMP	1							
20	2	119620-42020	GASKET, WATER PUMP		1						
21	2	24321-000350	O-RING, 1AG35.0	1							
22	2	129350-49541	GASKET		1						
23	2	119660-61052	GASKET	1	1						
24	1	129400-92400	FLEX HORN	1							1
25	1	129400-92410	FLEX HORN		1						1

Remarks
(1) OPTIONAL PART.

N:Old $\frac{\text{Yes}}{\text{No}}$ New. Q:Old $\frac{\text{No}}{\text{Yes}}$ New. R:Old $\frac{\text{Yes}}{\text{Yes}}$ New. S:Old $\frac{\text{No}}{\text{No}}$ New. W:Add. Z:Discontinued. F:Interchangeable by set. K:Q'ty Change

Copyright (C) YANMAR CO., LTD. All RightsReserved.

Parts No. Index

Parts No.	Fig. No.	Ref. No.
101158-11190	6	23
101304-59020	14	4
102103-55520	14	15
102210-07990	13	38
104200-55321	14	11
104200-55330	14	12
104200-55750	14	22
104200-59170	14	7
104207-44480	7	8
104211-11370	6	27
104264-59030	14	5
104514-42780	12	8 -1
105010-11230	6	49
		55
105025-59550	13	70
105225-23200	10	65
105225-59520	14	26
105311-01090	2	8
105546-51330	13	20
105582-59150	14	6
110250-55610	14	16
114250-11120	6	18
114250-11180	6	20
114250-11190	6	22
114250-53130	13	50
114250-53400	13	52
119225-01340	19	3
119225-14200	9	11
119225-35300	11	12
119225-42290	12	8
119225-42320	12	3
119225-44740	12	13
119225-51100	13	4
119225-51300	13	14
119225-59810	13	60
119225-77330	18	22
119241-66541	16	3
119245-66400	16	1
119247-77100	17	60
119255-01340	1	21
119260-01200	1	20
119260-01490	3	2
119260-01510	3	5 -1
119260-01590	3	9
119260-02020	1	10
119260-02410	1	19
119260-02800	1	11
119260-02930	1	14
119260-03020	6	75
119260-03030	6	77

Parts No.	Fig. No.	Ref. No.
119260-03030	19	8
119260-03031	6	77 -1
	19	8 -1
119260-07900	6	84
119260-11100	6	14
119260-11110	6	16
119260-11200	6	33
119260-11240	6	35
119260-11260	6	41
119260-11270	6	43
119260-11280	6	45
119260-11310	6	70
	19	10
119260-11330	6	64 -1
119260-11340	6	24
119260-11370	6	28
119260-11800	6	87
119260-13100	8	1 -1
119260-13110	8	3
	19	14
119260-14100	9	3
119260-14200	9	7
119260-14400	9	9
119260-14580	9	1
119260-21650	10	10
119260-22300	10	30
119260-23200	10	64
119260-23910	10	70
119260-25100	9	24
119260-25900	9	16
119260-35081	11	17
119260-42000	12	1
119260-42001	12	1 -1
119260-42020	12	6
	19	19
119260-49530	12	17
119260-49800	12	19
119260-59520	13	68
119260-59530	13	69
119260-59820	13	62
119260-59830	13	64
119270-12110	7	1
	19	12
119280-13100	8	1
119285-01580	4	5
119285-01600	4	2 -1
119285-01601	4	2
119285-01730	7	3 A
		9
119285-01800	5	3

Parts No.	Fig. No.	Ref. No.
119285-03140	6	79
119285-12730	7	3
119285-22091	10	18
119285-22131	10	46
119285-22821	10	34
119285-32000	11	1
119285-77050	17	53
119385-21580	10	15
119454-01721	5	1
119600-01050	2	4
119600-01722	5	2
119600-11450	6	30
119600-11460	6	31
119600-13100	8	2 -1
119600-34820	11	7
119600-35091	11	18
119600-52021	14	2
119600-61200	15	4
119600-61500	15	22
119600-61540	15	29
119600-61650	15	31
119600-61900	15	36
119600-66020	15	46
119600-66530	15	52
119600-66720	15	63
119600-66840	15	58
119610-01340	2	21
	19	4
119610-01490	3	1
119610-01590	3	8
119620-01200	2	20
119620-01620	4	6
119620-01800	3	12
119620-01950	3	14
119620-02020	2	9
119620-02410	2	18
119620-02450	9	6
119620-03020	6	76
119620-03031	6	78
	19	9
119620-11080	6	92
119620-11090	6	90
119620-11100	6	15
119620-11110	6	17
119620-11120	6	19
119620-11180	6	21
119620-11200	6	34
119620-11240	6	36
119620-11260	6	42
119620-11280	6	46

Parts No.	Fig. No.	Ref. No.
119620-11310	6	71
	19	11
119620-11330	6	65 -1
119620-11350	6	61
119620-11801	6	88
119620-13110	8	4
	19	15
119620-14100	9	4
119620-14200	9	8
119620-14400	9	10
119620-21500	10	14
119620-21941	10	13
119620-22300	10	31
119620-23910	10	71
119620-25102	9	25
119620-25912	9	31
119620-42020	12	7
	19	20
119620-42320	12	4
119620-42350	12	10
119620-49290	1	23
	2	22
119620-51101	13	5
119620-51170	13	10
119620-51180	13	11
119620-51190	13	12
119620-51250	13	13
119620-51300	13	15
119620-51340	13	21
119620-51350	13	22
119620-51370	13	23
119620-51450	13	24
119620-51461	13	25
119620-51510	13	27
119620-51650	13	29
119620-51660	13	30
119620-51670	13	31
119620-51680	13	32
119620-51700	13	33
119620-53000	13	44
119620-53080	13	47
119620-53120	13	49
119620-53140	13	51
119620-59700	13	73
119620-59811	13	61
119620-59821	13	63
119620-59831	13	65
119620-77820	6	94
119621-21680	10	12
119621-66051	15	47

Parts No. Index

Parts No.	Fig. No.	Ref. No.
119621-66091	15	38
119621-77331	18	23 -1
119621-77340	18	25
119629-11700	6	2 -1
119629-14580	9	2
119631-13101	8	2
119632-55620	14	10
119640-42290	12	9
119642-59540	13	66
119642-59550	13	71
119642-59570	13	72
119643-66532	16	2
119643-66541	16	4
119643-66560	15	49
119643-77900	17	54
119645-49010	12	29
119645-49020	12	30
119650-59200	14	8
119656-61500	15	23
119660-01510	3	5
119660-01551	3	25
119660-01562	3	26
	19	5
119660-01570	3	27
119660-01640	4	7
119660-01651	4	8
119660-01821	9	18
119660-01911	3	13
119660-12111	7	2
	19	13
119660-21651	10	11
119660-25022	9	22
119660-25052	9	23
119660-25902	9	17
119660-32001	11	2
119660-32020	11	3
119660-35102	11	8
119660-35113	11	9
	19	16
119660-35150	11	10
119660-35300	11	13
119660-42004	12	2
119660-42350	12	11
119660-51500	13	26
119660-51530	13	28
119660-61013	15	15
119660-61052	15	1
	19	23
119660-61060	15	2
119660-61071	15	3

Parts No.	Fig. No.	Ref. No.
119660-61121	15	16
119660-61140	15	17
119660-61150	15	18
119660-61300	15	8
119660-61341	15	9
119660-61460	15	19
119660-61491	15	21
119660-61651	15	30
119660-61901	15	37
119660-77330	18	23
119685-01740	5	4
119685-03140	6	80
119685-12731	7	6
119685-22090	10	19
119685-22130	10	47
119685-22820	10	35
119810-01770	5	5
119810-55340	14	13
119836-77200	18	1
119836-77700	18	2
119836-77710	18	4
119836-77721	18	5
119836-77730	18	6
119836-77741	18	7
119836-77750	18	8
119836-77760	18	9
119836-77770	18	10
119836-77780	18	11
119836-77790	18	15
119836-77800	18	16
119836-77810	18	19
119836-77820	18	20
119836-77830	18	21
119836-77840	18	17
119836-77850	18	3
119836-77860	18	18
119836-77871	18	12
119836-77880	18	13
119836-77890	18	14
121120-77011	17	1
121120-77930	17	12
121250-44901	12	25
121250-55620	14	17
121254-55510	14	14
121400-91251	17	66
121450-01560	3	6
121450-12520	7	15
121450-12530	7	16
121450-42450	12	27 -1
121450-61520	15	27

Parts No.	Fig. No.	Ref. No.
121465-12510	7	14 -1
121465-44740	12	14
121500-12790	7	5
121520-01851	14	1
	19	7
121520-01860	14	2 -1
121520-34810	11	6
121575-66830	15	57
121850-11860	6	10
124060-01050	1	4
124060-21600	10	17
124064-12670	7	17
124064-12680	7	18
124064-12690	7	19
124066-12510	7	14
124066-59100	13	67
	14	25
124085-02220	4	9
124160-01751	3	28
	6	95
124160-11340	6	25
124160-11360	6	82
124160-39450	11	22
124190-11080	6	91
124190-11090	6	89
124250-03640	15	48
124250-49351	12	27
124450-35110	11	11
	19	17
124465-44950	12	26
		28 -1
124550-55700	14	19
124550-59820	13	74
124550-66370	15	56
124701-11910	8	12
124701-11911	8	12 -1
124766-59050	14	24
124772-66750	15	53
124950-11340	6	26
124970-12500	7	13
124970-12640	7	15 -1
124970-12660	7	16 -1
124970-12700	7	17 -1
129100-01580	4	1
	10	5
129100-01760	5	6
129100-61930	15	51
129150-35350	11	14
129150-49360	12	28
129150-59120	13	54

Parts No.	Fig. No.	Ref. No.
129150-59130	13	57
129150-59580	14	27
129150-77340	18	24
129150-91400	3	31
129155-51280	15	14
129155-51580	13	53 -1
129155-61480	15	20
129155-61530	15	28
129155-61590	15	64
129155-61830	13	53
129155-66800	16	5
129155-77800	6	93
129350-49530	12	18
129350-49541	12	22
	19	22
129350-49800	12	20
129400-92400	19	24
129400-92410	19	25
135210-61090	15	55
144626-91560	11	24
171008-03990	6	81
171010-77850	17	63
171051-77100	17	61
171080-91100	17	65
171090-91010	17	64
171301-01640	5	9
171375-39600	11	23
171440-77801	17	62
174307-51700	15	24
194145-56901	17	59
194990-22050	3	15
	8	5
	15	45
22117-040000	15	32
		32 -1
22137-040000	13	39
	16	6
22217-040000	13	40
22217-050000	6	72
22217-080000	17	55
22242-000100	6	59
22242-000120	6	60
22242-000200	9	29
22252-000200	10	32
22252-000210	10	33
22272-000040	15	33
22322-030160	15	41
22351-020004	15	34
22351-030014	15	35
22351-040010	3	7

Parts No. Index

Parts No.	Fig. No.	Ref. No.
22351-040010	15	10
22351-060012	6	32
22360-040000	15	42
	16	7
22360-060000	15	11
22411-200250	17	56
22451-060000	15	59
22512-040120	9	5
		14
23414-080012	13	58
	14	9
23414-140000	13	59
23871-010000	2	5
23871-020000	6	10 -1
23871-030000	12	5
24101-062034	9	19
24102-063034	9	15
24311-000120	3	16
	6	83
	11	19
24311-000160	11	15
	19	18
24311-000320	3	29
	6	96
	19	6
24311-240100	14	23
	15	50
24321-000350	12	21
	19	21
24341-000070	15	43
24341-000240	3	33
	5	10
26013-060202	11	4
26014-060142	12	15
26014-060202	14	3
26022-040082	13	41
26106-060102	11	21
	15	44
	16	8
26106-060122	1	22
	2	19
	9	30
	11	20
	12	16
26106-060142	5	11
26106-060162	3	17
		34
	7	10
	9	20
	14	3 -1

Parts No.	Fig. No.	Ref. No.
26106-060182	12	23
26106-060202	5	12
26106-060222	4	10
26106-060282	7	11
26106-060302	3	18
26106-060352	8	6 -1
26106-060402	3	19
	8	6
26106-060452	5	13
	7	12
26106-060502	3	20
	5	14
26106-060552	5	15
26106-060602	3	21
		22
26106-060652	3	23
26106-060702	15	12
26106-060802	3	24
26106-080102	5	16
26106-080142	6	85
		86
26106-080182	16	9
	18	26
26106-080202	11	16
	12	24
26106-080402	8	7
26106-080452	6	62
	12	12
26106-081052	18	27
26116-050102	15	13
26116-060304	15	60
26156-120302	17	57
26206-100202	4	3
26206-100252	4	4
26216-060402	8	8
26216-080222	8	9
26216-080552	8	10
26366-060002	3	30
	8	11
26366-080002	6	63
	18	28
26376-120002	17	67
26450-060202	11	4 -1
		5
26557-050102	6	73
26587-040102	13	42
26587-080102	9	21
26756-060002	6	52
		58
	15	61

Parts No.	Fig. No.	Ref. No.
26756-080002	17	58
26979-050162	6	44
27221-050080	6	11
27221-060100	1	5
27231-400000	1	6
27231-450000	2	6
27241-100000	1	7
27241-120000	2	7
27241-250000	1	8
27241-300000	1	9
	2	8 -1
27241-350000	6	12
27241-400000	6	13
27310-070001	6	23 -1
43400-500400	15	62
43400-500450	15	54
719225-51100	13	1
719260-02870	1	26
719260-11521	6	64
719260-11650	6	47
719260-11660	6	53
719260-11700	6	1
719260-21700	10	1
719260-23100	10	58
719260-23600	10	76
		77
719260-23610	10	72
719270-01560	1	1
719285-22401	10	50
719285-22500	10	22
719285-22541	10	38
719285-92600	19	1
719620-02800	2	10
719620-02870	2	25
719620-02930	2	13
719620-11520	6	65
719620-11650	6	48
719620-11660	6	54
719620-23100	10	59
719620-23610	10	73
719620-53100	13	43
719621-51100	13	2
719660-11700	6	2
719660-14590	9	12
719660-21700	10	2
719685-01580	2	1
719685-22400	10	51
719685-22500	10	23
719685-22540	10	39
719685-92601	19	2

Parts No.	Fig. No.	Ref. No.
X0280210230	17	5
X0280620480	17	2
X0280630011	17	3
X0280992381	17	4
X0281003770	17	13
X0282002320	17	14
X0283060061	17	17
X0283270140	17	6
X0283711420	17	18
X0283711770	17	7
X0283712360	17	19
X0283810040	17	8
X0285011600	17	20
X0285100750	17	21
X0289030010	17	23
X0534006470	17	24
X0534040320	17	25
X0534490120	17	26
		27
X0534490230	17	28
		29
X0535050620	17	30
X0535130241	17	31
X0535130320	17	32
X0536600401	17	33
X1284000710	17	43
X9019008651	17	44
X9025806001	17	45
X9025808001	17	46
X9151005141	17	34
X9490071970	17	47
X9490170900	17	35
		36
X9490422570	17	48
X9490441303	17	37
X9490441312	17	38
X9490502820	17	39
		40
X9490561370	17	49
X9490721080	17	9
X9491002590	17	15
X9491002760	17	16
X9491200240	17	50
X9491402100	17	41
		42
X9491403700	17	51
X9491703371	17	10
X9491703380	17	52
X9491704260	17	11
X9491730461	17	22