YANMAR

PARTS CATALOG

0CD10-M34101EN

Last update Aug., 2015

PREFACE

1. This Parts Catalog is the 1st edition of 3TNA72L-UMS Diesel Engine for MAEDA IND..

Pub. No. : 000Y00D3411
Published : Augest,1991

2. Model name

Engine model	Vehicle		Vehicle made by
	Products	Model name	
3TNA72L-UMS	—	—	MAEDA IND.

Directions for the Parts Catalog.

1.This Parts Catalog shows both standard and optional parts.
2.Parts may change without prior notice.
3.The following is an example of the Parts Catalog format.

0CF10-G21601 29. FUEL INJECTION PUMP(W/BOOST)

(A)=4JH-DT
(B)=4JH-DTZ
(C)=4JH-DTZP
(D)=4JH-DTZA
(E)=4JH-DTZY
(F)=

① REF.	② LEV.	PARTS NO.	DESCRIPTION	Q'TY (A)	(B)	(C)	(D)	(E)	(F)	③ I	⑤ R
1	1	729595-51390	FUEL INJECTION PUMP	1	1	1	1	1			1
1-1	1	729595-51391	FUEL INJECTION PUMP	1	1	1	1	1		N	1
	(A=E00185)	(B=E00200)									
3	2	26022-060162	SCREW M 6X 16	9	9	9	9	9			
3-1 ④	2	26022-060162	SCREW M 6X 16	4	4	4	4	4		K	
	(A=E00156)	(B=E00156)	(C=E00156) (D=E00156)	(E=E00156)							
4	2	129470-51040	CAMSHAFT	1	1	1	1	1			
5	2	122710-51050	BEARING, ROLLER	2	2	2	2	2			
6	2	129470-51060	RETAINER	1	1	1	1	1			

Remarks
(1) BOOST COMPEMSATOR TYPE. OPTIONAL PART, TO E00155,(4JH-DT, 4JH-DTZ

①Ref. No.

The Ref. No. listed may not be in accordance with the illustration Ref. No.

(Ex.) Illustration No. 1 List Ref No. 1 (Before change) → 1- 1 (After change)

For interchangeable symbols N, R and K, illustrations for new parts may be abbreviated.

②Lev. (Level)

Level indication
The numbers below indicate the level of relativity towards the main part.
1 ----- Main parts (Assembly parts)
2 ----- Sub component included in " 1 ".
3 ----- Sub component included in " 2 ".
Note) Parts that are not for sale are partially illustrated but not listed.

③Interchangeability Symbol

When a part change takes place, one of the following interchangeability symbols is indicated beside the part.

Symbol	Interchangeability	Contents note
N	Old ← Yes / No → New	New Part is interchangeable for Old Part but Old Part is not interchangeable for New Part.
Q	Old ← No / Yes → New	New Part is not interchangeable for Old Part but Old Part is interchangeable for New Part.
R	Old ← Yes / Yes → New	New/ Old Parts are both interchangeable.
S	Old ← No / No → New	New/ Old Parts are both not interchangeable.
W		Part newly added.
Z		Part discontinued.
F		Not interchangeable by a single part but interchangeable together with related parts.
K		Changes only for used parts quantities.

④Effective Machine No.

When a part changes, the effective Machine No. will be indicated in the (A)-(F) column.

Product Symbol	Product No.	Product Symbol	Product No.
C	Clutch No. Compressor No.	F	Machine No. (Agricultural Equip.)
D	Drive No.	M	Machine No.
E	Engine No.		

Note 1) A date may follow the symbol. (Ex.) 1996.01
Note 2) " XXXXX " and " ZZZZZ " are for parts that could not be predicted or for engine models that could not be identified.
Note 3) (A=E00185) is the E (Engine Serial Number) for the column (A) model (in this case 4JH-DT) after the parts design change.

⑤Remarks

Figures or alphabets (symbols) are entered in the remarks column.
The comments (remarks) on parts that are indicated at the bottom of the illustration are the same symbols as those stated above.

Contents

0CD10-M34101

Fig. No.	Fig. Name
ENGINE 3TNA72L-UMS	
1.	CYLINDER BLOCK
2.	GEAR HOUSING
3.	FLYWHEEL & LUB.OIL SUMP
4.	CYLINDER HEAD & BONNET
5.	SUCTION MANIFOLD & AIR CLEANER
6.	EXHAUST MANIFOLD & SILENCER
7.	CAMSHAFT & DRIVING GEAR
8.	CRANKSHAFT & PISTON
9.	LUB.OIL SYSTEM
10.	COOLING WATER SYSTEM
11.	FUEL INJECTION PUMP
12.	FUEL LINE
13.	GOVERNOR
14.	ENGINE STOP DEVICE
15.	STARTING MOTOR
16.	GENERATOR
17.	ELECTRIC PART
18.	GASKET SET(OPTIONAL)

Fig.1. CYLINDER BLOCK

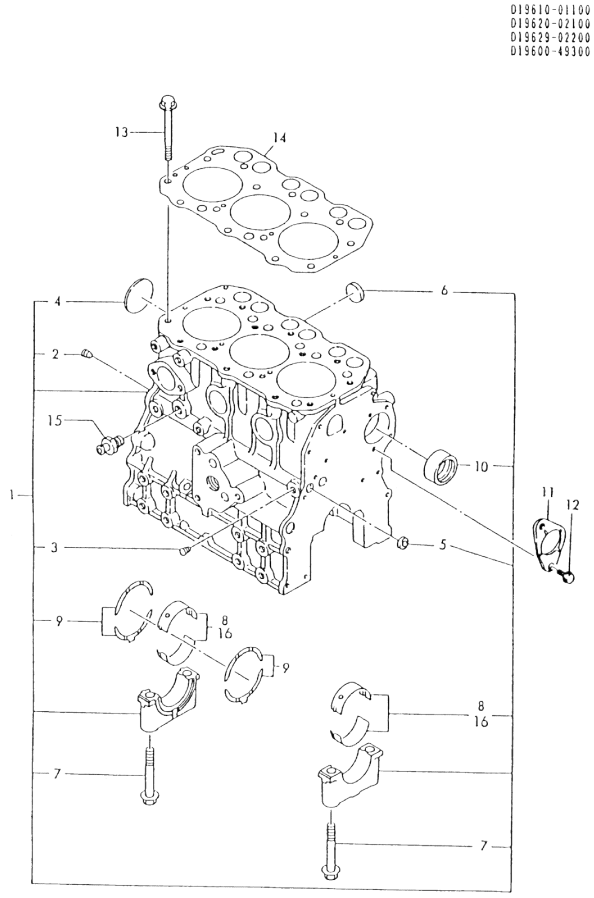

(A)=3TNA72L-UMS
(B)=
(C)=
(D)=
(E)=
(F)=

No.	Lev.	Parts No.	Description	Q'ty (A)	(B)	(C)	(D)	(E)	(F)	I	R
1	1	719610-01560	BLOCK ASSY, CYLINDER	1							
2	2	119600-01050	PLUG, PT1/4	1							
3	2	23871-010000	PLUG, R01	1							
4	2	27231-450000	PLUG 45	1							
5	2	27241-120000	PLUG, 12	1							
6	2	27241-300000	PLUG 30	6							
7	2	119620-02020	BOLT, METAL CAP	8							
8	2	719620-02800	BEARING, MAIN	4							
9	2	719620-02930	BEARING, THRUST	2							
10	2	119620-02410	BUSH, CAMSHAFT	1							
11	1	119620-02450	BEARING, THRUST	1						Z	
	(A=EXXX)										
12	1	26106-060122	BOLT, M6X 12 PLATED	2							
13	1	119620-01200	BOLT, HEAD	14							
14	1	119610-01340	GASKET, HEAD	1							
15	1	121550-49111	JOINT, PT1/4	1							
16	1	719620-02870	BEARING, 0.25 US	4							1

Remarks
(1) UNDER-SIZE(U.S=0.25)PART.

N:Old ←Yes/No→ New. Q:Old ←No/Yes→ New. R:Old ←Yes/Yes→ New. S:Old ←No/No→ New. W:Add. Z:Discontinued. F:Interchangeable by set. K:Q'ty Change

Copyright (C) YANMAR CO., LTD. All RightsReserved.

Fig.2. GEAR HOUSING

(A)=3TNA72L-UMS
(B)=
(C)=
(D)=
(E)=
(F)=

D19610-01200
D19600-01320
719641-51310
D29150-91100

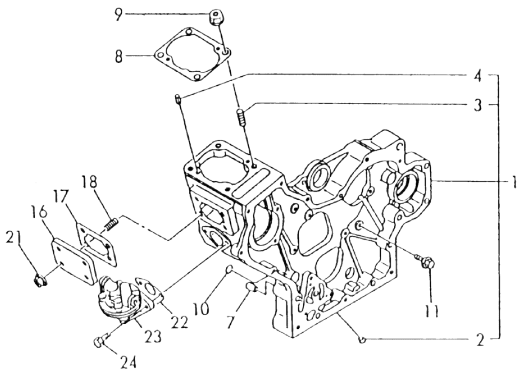

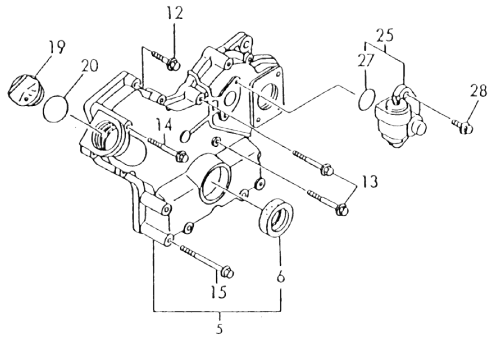

No.	Lev.	Parts No.	Description	Q'ty (A)	(B)	(C)	(D)	(E)	(F)	I	R
1	1	119610-01490	CASE ASSY, GEAR	1							
2	2	119660-01510	PLUG, 10X14	1							
3	2	121450-01560	STUD, M8X22	4							
4	2	22351-040010	PIN, SPRING 4.0X10	2							
5	1	119610-01590	COVER ASSY,GEAR CASE	1							W
	(A=E41836)										
6	2	119620-01800	SEAL, OIL	1							
7	1	119660-01911	PIPE, KNOCK	4							
8	1	119620-01950	SHIM SET, ADJUSTING	1							
9	1	194990-22050	NUT, M8	4							
10	1	24311-000120	O-RING, 1AP12.0	2							
11	1	26106-060162	BOLT, M6X 16 PLATED	7							
12	1	26106-060302	BOLT, M6X 30 PLATED	8							
13	1	26106-060602	BOLT, M6X 60 PLATED	3							
14	1	26106-060602	BOLT, M6X 60 PLATED	1							
15	1	26106-060802	BOLT, M6X 80 PLATED	6							
16	1	119660-01551	COVER	1							
17	1	119660-01561	GASKET	1							
17-1	1	119660-01562	GASKET	1							N
	(A=EXXX)										
18	1	119660-01570	STUD, M6X12	4							
19	1	124160-01751	COVER, FILLER	1							
20	1	24311-000320	O-RING, 1AP32.0	1							
21	1	26366-060002	NUT, M6	4							
22	1	121520-01850	GASKET	1							
22-1	1	121520-01851	GASKET	1							N
	(A=EXXX)										
23	1	119600-52021	PUMP ASSY, FUEL FEED	1							
24	1	26014-060202	BOLT, M6X 20	2							
25	1	129150-91400	GEAR	1							
27	2	24341-000240	O-RING, 1AS24.0	1							
28	1	26106-060162	BOLT, M6X 16 PLATED	2							

N:Old ←Yes/No→ New. Q:Old ←No/Yes→ New. R:Old ←Yes/Yes→ New. S:Old ←No/No→ New. W:Add. Z:Discontinued. F:Interchangeable by set. K:Q'ty Change

Copyright (C) YANMAR CO., LTD. All RightsReserved.

Fig.3. FLYWHEEL & LUB.OIL SUMP

(A)=3TNA72L-UMS
(B)=
(C)=
(D)=
(E)=
(F)=

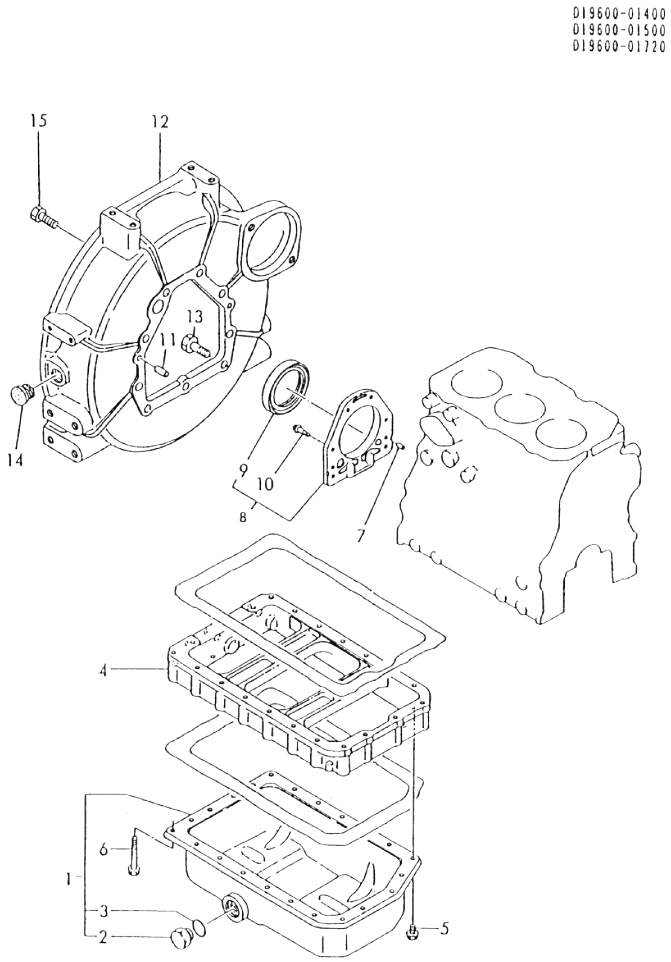

No.	Lev.	Parts No.	Description	Q'ty (A)	(B)	(C)	(D)	(E)	(F)	I	R
1	1	719631-01540	SUMP ASSY, OIL	1							
2	2	171301-01640	PLUG, 22	1							
3	2	24341-000240	O-RING, 1AS24.0	1							
4	1	119600-01722	SPACER, OIL SUMP	1							
5	1	26106-060122	BOLT, M6X 12 PLATED	3							
6	1	26106-060452	BOLT, M6X 45 PLATED	20							
7	1	119620-01620	PIN, M6X10	2							
8	1	119660-01640	CASE ASSY, OIL SEAL	1							W
	(A=E41836)										
9	2	124085-02220	SEAL, OIL	1							
10	1	26106-060222	BOLT, M6X 22 PLATED	10							
11	1	129100-01580	PIN, M8X16	2							
12	1	119600-01600	HOUSING, FLYWHEEL	1							
13	1	121120-01620	BOLT, M10X28	3							
14	1	119620-01750	CAP	1							
15	1	26206-100252	BOLT, M10X 25 PLATED	6							

N:Old ◄Yes/No► New. Q:Old ◄No/Yes► New. R:Old ◄Yes/Yes► New. S:Old ◄No/No► New. W:Add. Z:Discontinued. F:Interchangeable by set. K:Q'ty Change

Copyright (C) YANMAR CO., LTD. All RightsReserved.

Fig.4. CYLINDER HEAD & BONNET

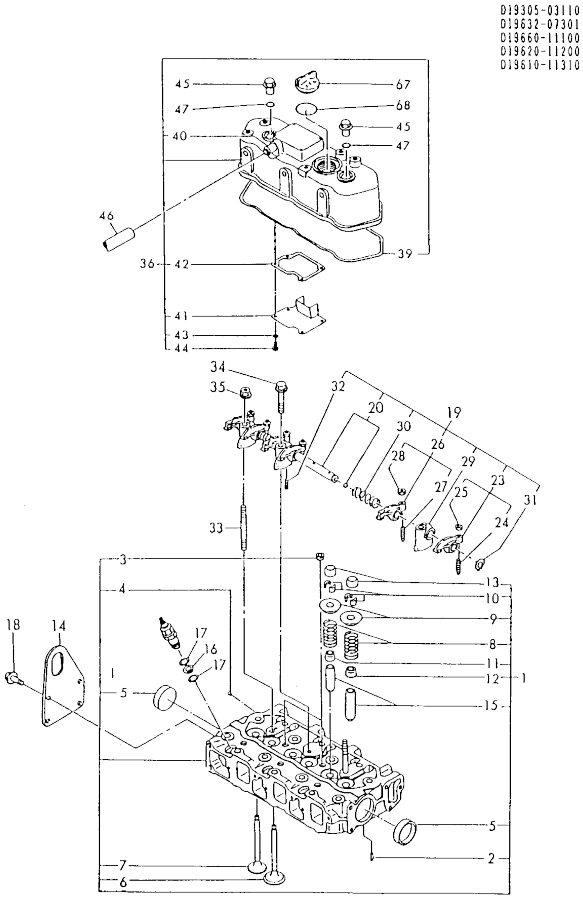

(A)=3TNA72L-UMS (D)=
(B)= (E)=
(C)= (F)=

No.	Lev.	Parts No.	Description	Q'ty (A)	(B)	(C)	(D)	(E)	(F)	I	R
1	1	719660-11700	HEAD ASSY, CYLINDER	1							
2	2	22351-060012	PIN, SPRING 6.0X12	2							
3	2	121850-11860	PLUG, PT1/4	2							
4	2	27221-050080	PLUG, 5X 8	1							
5	2	27241-400000	PLUG, 40	2							
6	2	119620-11100	VALVE, INTAKE	3							
7	2	119620-11110	VALVE, EXHAUST	3							
8	2	119620-11120	SPRING, VALVE	6							
9	2	119620-11180	RETAINER, SPRING	6							
10	2	101158-11190	COTTER	6							
10-1	2	27310-070001	COTTER, 7	6							R
	(A=EXXXXX)										
11	2	124950-11340	SEAL, VALVE STEM	3							
12	2	124160-11340	SEAL, VALVE STEM	3							
13	2	104211-11370	CAP, VALVE	6							
14	1	119632-07900	LIFTER	1							
15	1	119620-11801	GUIDE, VALVE	6							1
16	1	119600-11450	PROTECTOR, NOZZLE	3							
17	1	119600-11460	GASKET, NOZZLE	6							
18	1	26106-060122	BOLT, M6X 12 PLATED	4							
19	1	119620-11200	SUPPORT ASSY, ARM	1							
20	2	119620-11240	SHAFT ASSY, ROCKER	1							
23	2	719620-11650	ARM ASSY, ROCKER	3							
24	3	105010-11230	SCREW, VALVE ADJUST	3							
25	3	26756-060002	NUT, LOCK M6	3							
26	2	719620-11660	ARM ASSY, ROCKER	3							
27	3	105010-11230	SCREW, VALVE ADJUST	3							
28	3	26756-060002	NUT, LOCK M6	3							
29	2	119620-11260	SUPPORT, ROCKER ARM	3							
30	2	119620-11280	SPRING	2							
31	2	22242-000120	RING, 12	2							
32	2	26979-050162	SCREW, M5X16	1							
33	1	119620-11350	STUD	2							
34	1	26106-080452	BOLT, M8X 45 PLATED	1							
35	1	26366-080002	NUT, M8	2							
36	1	719620-11520	BONNET ASSY, HEAD	1							
36-1	1	119620-11330	BONNET ASSY, HEAD	1							N
	(A=E41836)										
39	2	119620-11310	GASKET, BONNET	1							
40	2	119620-11390	JOINT	1							
41	2	119620-03020	PLATE, SHELTER	1							
42	2	119620-03030	GASKET	1							
42-1	2	119620-03031	GASKET	1							N
	(A=EXXX)										
43	2	22217-050000	WASHER, SPRING 5	4							
44	2	26557-050102	SCREW, M5X10	4							
45	1	124160-11360	KNOB	2							
46	1	23065-120500	PIPE, 12X 500	1							
47	1	24311-000120	O-RING, 1AP12.0	2							
67	1	124160-01751	COVER, FILLER	1							
68	1	24311-000320	O-RING, 1AP32.0	1							

Remarks
(1) REPAIR PART.

N:Old $\xleftarrow[\text{No}]{\text{Yes}}$ New. Q:Old $\xleftarrow[\text{Yes}]{\text{No}}$ New. R:Old $\xleftarrow[\text{Yes}]{\text{Yes}}$ New. S:Old $\xleftarrow[\text{No}]{\text{No}}$ New. W:Add. Z:Discontinued. F:Interchangeable by set. K:Q'ty Change

Copyright (C) YANMAR CO., LTD. All RightsReserved.

Fig.5. SUCTION MANIFOLD & AIR CLEANER

(A)=3TNA72L-UMS
(B)=
(C)=
(D)=
(E)=
(F)=

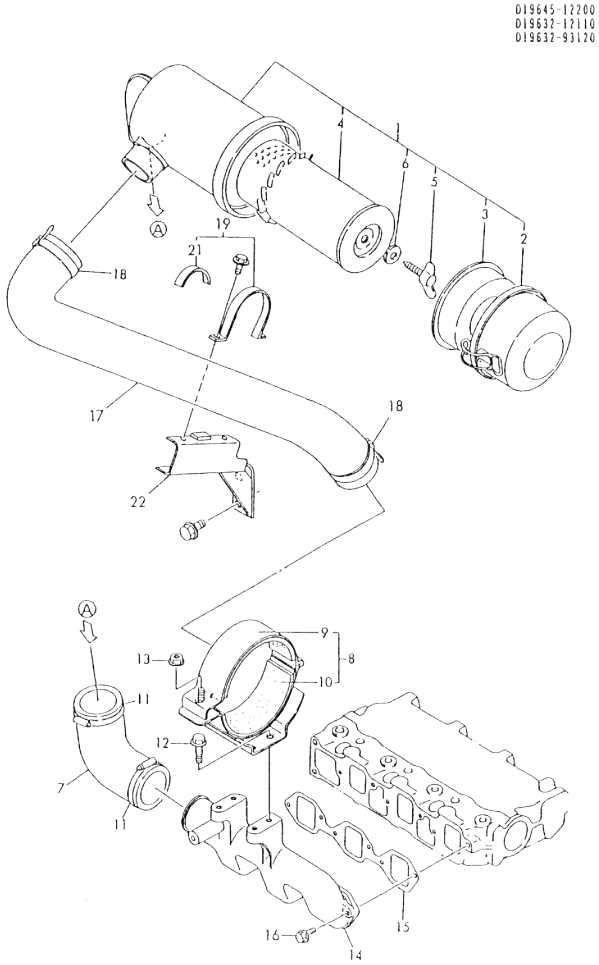

No.	Lev.	Parts No.	Description	Q'ty (A)	(B)	(C)	(D)	(E)	(F)	I	R
1	1	119632-12510	CLEANER ASSY, AIR	1							
2	2	121024-12660	PAN ASSY, DUST	1							
3	2	121465-12700	RETAINER, ELEMENT	1							
4	2	121465-12510	ELEMENT	1							
5	2	124064-12680	BOLT	1							
6	2	124064-12690	WASHER	1							
7	1	119632-12551	PIPE, AIR INTAKE	1							
8	1	119632-12590	SUPPORT ASSY,CLEANER	1							
9	2	119632-12560	SUPPORT	1							
10	2	119640-12580	SEAT, RUBBER	2							
11	1	23000-060000	CLAMP, 60	2							
12	1	26014-080202	BOLT, M8X 20	4							
13	1	26366-080002	NUT, M8	1							
14	1	119645-12100	MANIFOLD, AIR INTAKE	1							
15	1	119620-12110	GASKET, MANIFOLD	1							
15-1	1	119620-12111	GASKET, MANIFOLD	1						N	
	(A=E41836)										
16	1	26106-060202	BOLT, M6X 20 PLATED	6							
17	1	119632-12211	PIPE, AIR INTAKE	1							
18	1	23000-060000	CLAMP, 60	2							
19	1	129132-12800	BAND, AIR CLEANER	1							
21	2	129132-12860	SEAT, RUBBER	1							
22	1	119632-12810	SUPPORT, AIR CLEANER	1							

N:Old ←Yes/No→ New. Q:Old ←No/Yes→ New. R:Old ←Yes/Yes→ New. S:Old ←No/No→ New. W:Add. Z:Discontinued. F:Interchangeable by set. K:Q'ty Change

Copyright (C) YANMAR CO., LTD. All RightsReserved.

Fig.6. EXHAUST MANIFOLD & SILENCER

(A)=3TNA72L-UMS (D)=
(B)= (E)=
(C)= (F)=

D19631-13200
D19632-13100
D19632-93120

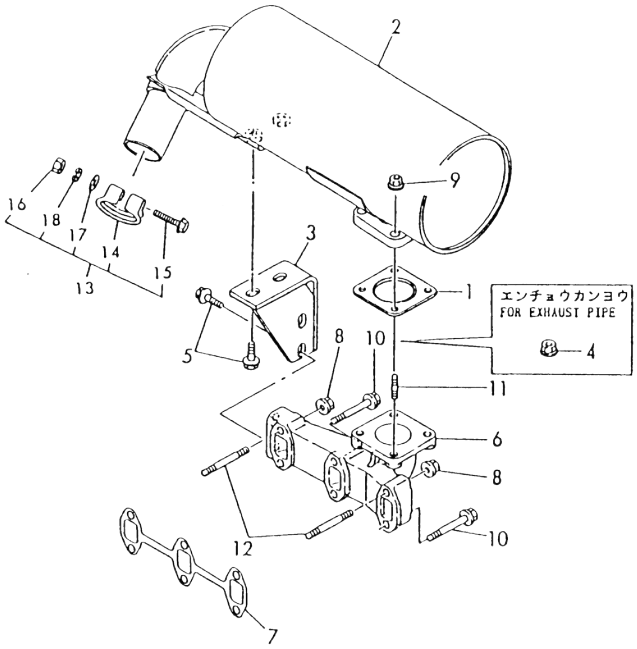

No.	Lev.	Parts No.	Description	Q'ty (A)	(B)	(C)	(D)	(E)	(F)	I	R
1	1	124701-11910	GASKET, SILENCER	1							
1-1	1	124701-11911	GASKET, SILENCER	1						N	
	(A=E41836)										
2	1	119632-13511	SILENCER	1							
3	1	119631-13650	STAY, SILENCER	1							
4	1	194990-22050	NUT, M8	4							
5	1	26014-080202	BOLT, M8X 20	4							
6	1	119631-13101	MANIFOLD, EXHAUST	1							
7	1	119620-13110	GASKET	1							
8	1	194990-22050	NUT, M8	2							
9	1	194990-22050	NUT, M8	4							
10	1	26106-080402	BOLT, M8X 40 PLATED	4							
11	1	26216-080222	STUD, M8X 22	4							
12	1	26216-080552	STUD, M8X 55	2							
13	1	121120-13590	CLAMP	1						W	
	(A=*1991.02)										
14	2	121120-13580	CLAMP	1							
15	2	26106-100652	BOLT, M10X 65 PLATED	1							
16	2	26706-100002	NUT, M10	1							
17	2	22137-100000	WASHER, 10	1						W	
	(A=*1991.02)										
18	2	22217-100000	WASHER, SPRING 10	1						W	
	(A=*1991.02)										

N:Old ←Yes/No→ New. Q:Old ←No/Yes→ New. R:Old ←Yes/Yes→ New. S:Old ←No/No→ New. W:Add. Z:Discontinued. F:Interchangeable by set. K:Q'ty Change

Copyright (C) YANMAR CO., LTD. All RightsReserved.

Fig.7. CAMSHAFT & DRIVING GEAR

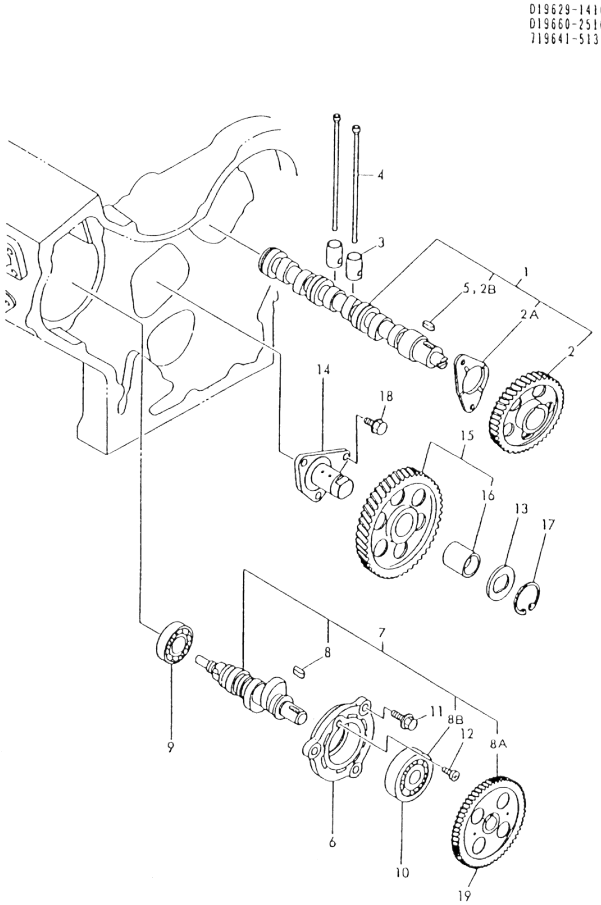

(A)=3TNA72L-UMS (D)=
(B)= (E)=
(C)= (F)=

No.	Lev.	Parts No.	Description	Q'ty (A)	(B)	(C)	(D)	(E)	(F)	I	R
1	1	119629-14580	CAMSHAFT ASSY	1						W	
	(A=EXXX)										
2	2	119620-14100	GEAR, CAMSHAFT	1							
2A	2	119620-02450	BEARING, THRUST	1						W	
	(A=EXXX)										
2B	2	22512-040120	KEY, 4X 12	1						W	
	(A=EXXX)										
3	1	119620-14200	TAPPET	6							
4	1	119620-14400	ROD, PUSH	6							
5	1	22512-040120	KEY, 4X 12	1						Z	
	(A=EXXX)										
6	1	119660-01821	BEARING, FUEL CAM	1							
7	1	719660-14590	CAMSHAFT	1						W	
	(A=EXXX)										
8	2	22512-040120	KEY, 4X 12	1							
8A	2	119660-25902	GEAR, PUMP	1						W	
	(A=EXXX)										
8B	2	24102-063034	BEARING, BALL 6303U	1						W	
	(A=EXXX)										
9	1	24101-062034	BEARING, BALL 6203	1							
10	1	24102-063034	BEARING, BALL 6303U	1						Z	
	(A=EXXX)										
11	1	26106-060162	BOLT, M6X 16 PLATED	3							
12	1	26587-080102	SCREW, M8X10	1							
13	1	119660-25022	RETAINER	1							
14	1	119660-25052	SHAFT, IDLE	1							
15	1	119620-25102	GEAR ASSY, IDLE	1							
16	1	119620-25912	BUSH	1							1
17	1	22242-000200	RING, 20	1							
18	1	26106-060122	BOLT, M6X 12 PLATED	3							
19	1	119660-25902	GEAR, PUMP	1						Z	
	(A=EXXX)										

Remarks
(1) REPAIR PART.

N:Old ←Yes/No→ New. Q:Old ←No/Yes→ New. R:Old ←Yes/Yes→ New. S:Old ←No/No→ New. W:Add. Z:Discontinued. F:Interchangeable by set. K:Q'ty Change

Copyright (C) YANMAR CO., LTD. All RightsReserved.

Fig.8. CRANKSHAFT & PISTON

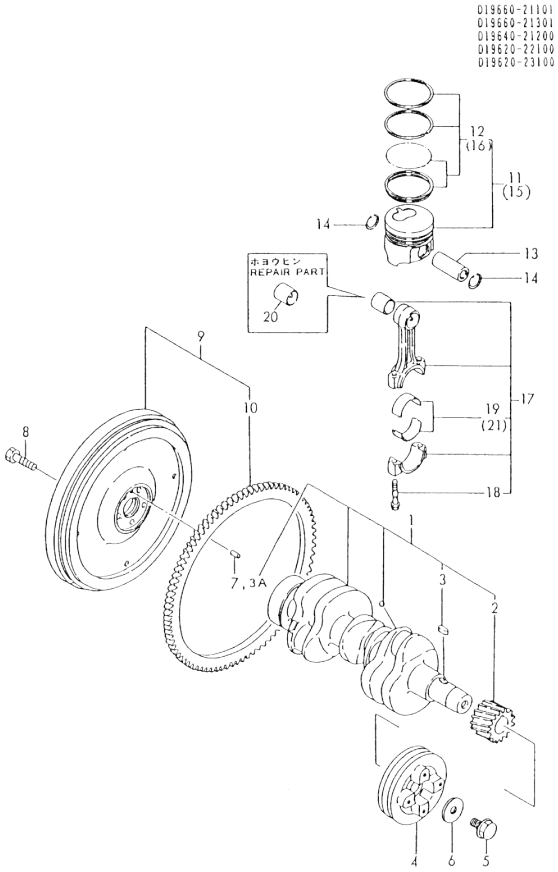

(A)=3TNA72L-UMS
(B)=
(C)=
(D)=
(E)=
(F)=

No.	Lev.	Parts No.	Description	Q'ty (A)	(B)	(C)	(D)	(E)	(F)	I	R
1	1	719660-21701	CRANKSHAFT ASSY	1							
1-1	1	719660-21700	CRANKSHAFT ASSY	1						N	
	(A=EXXX)										
2	2	119660-21201	GEAR, CRANKSHAFT	1							
3	2	22512-040120	KEY, 4X 12	1							
3A	2	129100-01580	PIN, M8X16	1						W	
	(A=EXXX)										
4	1	119660-21651	V-PULLEY	1							
5	1	119621-21680	BOLT, FLANGE 12X1.25	1							
6	1	119620-21941	WASHER	1							
7	1	129100-01580	PIN, M8X16	1						Z	
	(A=EXXX)										
8	1	121111-21501	BOLT, FLYWHEEL	5							
9	1	119640-21590	FLYWHEEL ASSY	1							
10	2	119865-21600	GEAR, RING	1							
11	1	119620-22090	PISTON ASSY	3							
12	2	719620-22500	RING SET, PISTON	3							
13	1	119620-22300	PIN, PISTON	3							
14	1	22252-000210	RING, 21	6							
15	1	719620-22820	PISTON ASSY, 0.25 OS	3							1
16	2	719620-22540	RING SET, 0.25 OS	3							1
17	1	719620-23100	ROD ASSY, CONNECTING	3							
18	2	105225-23200	BOLT, CONNECTING ROD	6							
19	2	719620-23600	BEARING, CRANK PIN	3							
20	1	119620-23910	BEARING, PISTON PIN	3							2
21	1	719620-23610	BEARING ASSY, 0.25	3							3

Remarks
(1) OVER-SIZE(O.S=0.25)PART.
(2) REPAIR PART.
(3) UNDER-SIZE(U.S=0.25)PART.

N:Old ←Yes/No→ New. Q:Old ←No/Yes→ New, R:Old ←Yes/Yes→ New. S:Old ←No/No→ New. W:Add. Z:Discontinued. F:Interchangeable by set. K:Q'ty Change

Copyright (C) YANMAR CO., LTD. All RightsReserved.

Fig.9. LUB.OIL SYSTEM

(A)=3TNA72L-UMS
(B)=
(C)=
(D)=
(E)=
(F)=

019660-32100
019631-34100
019600-35100
019600-35200
019600-39100

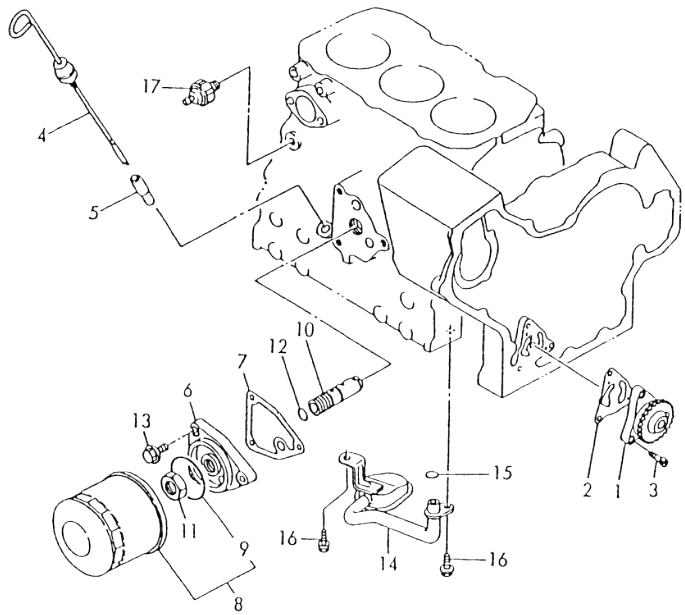

No.	Lev.	Parts No.	Description	Q'ty (A)	(B)	(C)	(D)	(E)	(F)	I	R
1	1	119660-32001	PUMP ASSY, OIL	1							
2	1	119660-32020	GASKET, PUMP	1							
3	1	26450-060202	BOLT, M6X 20	3							
4	1	119631-34800	DIPSTICK, OIL	1							
5	1	121520-34810	GUIDE, DIPSTICK	1							
6	1	119660-35102	BRACKET, FILTER	1							
7	1	119660-35112	GASKET	1							
7-1	1	119660-35113	GASKET	1						N	
	(A=E37086)										
8	1	119660-35150	FILTER, LUB. OIL	1							
8-1	1	119305-35151	FILTER ASSY, D68XL65	1						N	1
	(A=EXXXXX)										
9	2	124450-35110	O-RING	1						Z	
	(A=EXXXXX)										
10	1	119660-35300	VALVE ASSY, CONTROL	1							
11	1	129150-35350	NUT	1							
12	1	24311-000160	O-RING, 1AP16.0	1							
13	1	26106-080202	BOLT, M8X 20 PLATED	3							
14	1	119600-35081	PIPE ASSY, OIL INLET	1							
15	1	24311-000120	O-RING, 1AP12.0	1							
16	1	26106-060102	BOLT, M6X 10 PLATED	2							
17	1	124160-39450	SWITCH, 0.5KG	1							

Remarks
(1)O-ring is integrated type.
(integrated to the LO.filter)

N:Old ←Yes/No→ New. Q:Old ←No/Yes→ New, R:Old ←Yes/Yes→ New, S:Old ←No/No→ New, W:Add, Z:Discontinued, F:Interchangeable by set, K:Q'ty Change

Copyright (C) YANMAR CO., LTD. All RightsReserved.

Fig.10. COOLING WATER SYSTEM

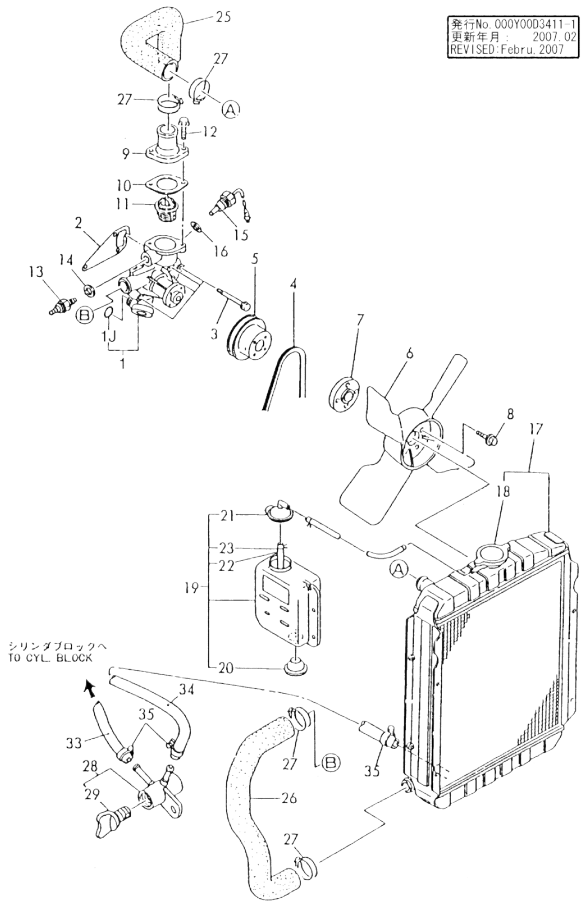

(A)=3TNA72L-UMS
(B)=
(C)=
(D)=
(E)=
(F)=

No.	Lev.	Parts No.	Description	Q'ty (A)	(B)	(C)	(D)	(E)	(F)	I	R
1	1	119660-42003	PUMP ASSY, WATER	1							
1-1	1	119660-42004	PUMP ASSY, WATER	1						N	
	(A=E37086)										
1J	2	119620-42320	O-RING	1							
2	1	119620-42020	GASKET, WATER PUMP	1							
3	1	26106-080452	BOLT, M8X 45 PLATED	4							
4	1	119640-42290	V-BELT, FM36.5	1							
5	1	119642-42350	V-PULLEY, D=97	1							
6	1	121450-44740	FAN, COOLING	1							
7	1	124574-44761	SPACER, FAN	1							
8	1	26014-060252	BOLT, M6X 25	4							
9	1	129350-49530	COVER, THERMOSTAT	1							
10	1	129350-49540	GASKET	1							
10-1	1	129350-49541	GASKET	1						N	
	(A=E37086)										
11	1	129350-49800	THERMOSTAT, 71	1							
12	1	26106-080202	BOLT, M8X 20 PLATED	2							
13	1	121250-44901	SWITCH, 110	1							
14	1	124465-44950	GASKET, 16	1							
15	1	119650-44900	SWITCH	1							
16	1	129150-49360	GASKET	1							
17	1	119600-44500	RADIATOR	1							
18	2	124450-44590	CAP, RADIATOR	1							
19	1	121468-44511	TANK ASSY, SUB	1							
20	2	121468-44540	PLUG, SUB-TANK	1							
21	2	121450-44531	CAP	1							
22	2	23065-070130	PIPE, 7X 130	1							
23	2	124450-44560	RETAINER	1							
25	1	119688-49010	PIPE, WATER	1							
26	1	119632-49020	PIPE, WATER	1							
27	1	23010-038000	CLAMP, 38	4							
28	1	129150-49100	COCK ASSY, 3-WAY	1							
29	2	129150-49080	COCK, DRAIN	1							
33	1	121024-59090	PIPE, FUEL D12X450	1							
34	1	106800-59560	PIPE, FUEL	1							
35	1	124766-59050	CLIP, HOSE 12	4							

N:Old ←Yes/No→ New. Q:Old ←No/Yes→ New. R:Old ←Yes/Yes→ New. S:Old ←No/No→ New. W:Add. Z:Discontinued. F:Interchangeable by set. K:Q'ty Change

Copyright (C) YANMAR CO., LTD. All RightsReserved.

Fig.11. FUEL INJECTION PUMP

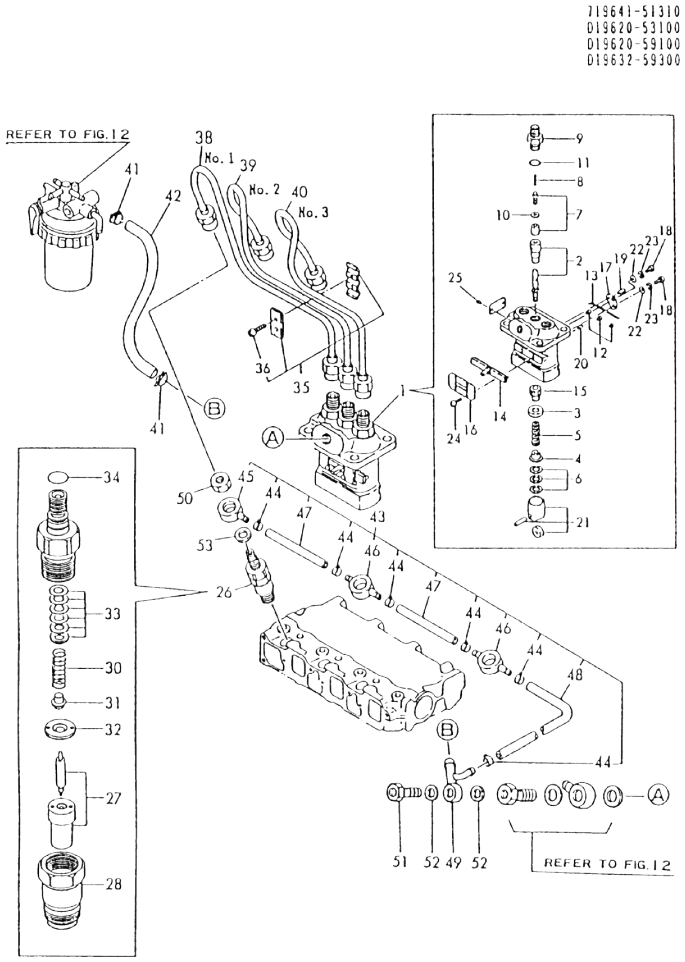

(A)=3TNA72L-UMS
(B)=
(C)=
(D)=
(E)=
(F)=

No.	Lev.	Parts No.	Description	Q'ty (A)	(B)	(C)	(D)	(E)	(F)	I	R
1	1	719621-51100	PUMP ASSY, INJECTION	1							
2	2	119620-51101	PLUNGER ASSY	3							
3	2	119620-51170	RETAINER, SPRING A	3							
4	2	119620-51180	RETAINER, SPRING B	3							
5	2	119620-51190	SPRING, PLUNGER	3							
6	2	119620-51250	SHIM SET	3							
7	2	119620-51300	VALVE ASSY, DELIVERY	3							
8	2	105546-51330	SPRING, DELIVERY	3							
9	2	119620-51340	HOLDER, DELIVERY	3							
10	2	119620-51350	GASKET	3							
11	2	119620-51370	O-RING	3							
12	2	119620-51450	PIECE	3							
13	2	119620-51461	PIN	1							
14	2	119660-51500	RACK, CONTROL	1							
15	2	119620-51510	PINION	3							
16	2	119660-51530	RETAINER, RACK	1							
17	2	119620-51650	PLATE	2							
18	2	119620-51660	SCREW	2							
20	2	119620-51680	PIN	1							
21	2	119620-51700	TAPPET ASSY	3							
22	2	22137-040000	WASHER, 4	2							
23	2	22217-040000	WASHER, SPRING 4	2							
24	2	26022-040082	SCREW, M4X 8	4							
25	2	26587-040102	SCREW, M4X10	2							
26	1	719620-53100	VALVE ASSY,INJECTION	3							
27	2	119620-53000	VALVE ASSY,INJECTION	3							
28	2	119620-53080	NUT, NOZZLE	3							
30	2	119620-53120	SPRING, NOZZLE	3							
31	2	114250-53130	SEAT, SPRING	3							
32	2	119620-53140	SPACER, VALVE STOP	3							
33	2	114250-53400	SHIM SET	3							
34	2	129155-61830	O-RING, S10	3							
35	1	129150-59120	RETAINER, PIPE	1							
36	2	129150-59130	BOLT, M4X12	2							
38	1	119620-59811	PIPE ASSY, INJECTION	1							
39	1	119620-59821	PIPE ASSY, INJECTION	1							
40	1	119620-59831	PIPE ASSY, INJECTION	1							
41	1	124766-59050	CLIP, HOSE 12	2							
42	1	121250-59080	PIPE, FUEL D12X180	1							
43	1	119642-59540	PIPE ASSY, RETURN	1							
44	2	124066-59100	CLIP, HOSE 8	6							
45	2	119260-59520	JOINT	1							
46	2	119260-59530	JOINT	2							
47	2	105025-59550	PIPE, FUEL RETURN	2							
48	2	119642-59550	PIPE, FUEL RETURN	1							
49	2	119642-59570	JOINT, OVER FLOW	1							
50	1	119620-59700	NUT, NOZZLE	3							
51	1	124550-59820	BOLT, PIPE JOINT M8	1							
52	1	23414-080012	GASKET, 8X1.0	2							
53	1	23414-140000	GASKET, 14X1.0	3							

N:Old ←Yes/No→ New. Q:Old ←No/Yes→ New. R:Old ←Yes/Yes→ New. S:Old ←No/No→ New. W:Add. Z:Discontinued. F:Interchangeable by set. K:Q'ty Change

Copyright (C) YANMAR CO., LTD. All RightsReserved.

Fig.12. FUEL LINE

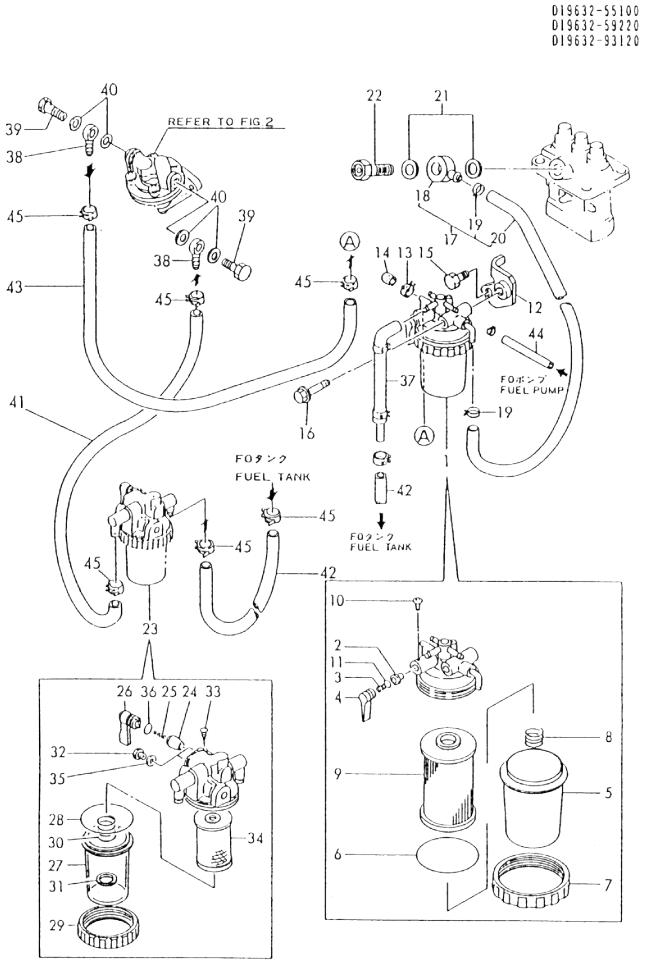

(A)=3TNA72L-UMS
(B)=
(C)=
(D)=
(E)=
(F)=

No.	Lev.	Parts No.	Description	Q'ty (A)	(B)	(C)	(D)	(E)	(F)	I	R
1	1	119632-55620	FILTER ASSY, FUEL	1							
2	2	104200-55321	VALVE, TAPER	1							
3	2	104200-55330	SPRING, VALVE	1							
4	2	119810-55340	LEVER	1							
5	2	121254-55510	COVER	1							
6	2	102103-55520	O-RING	1							
7	2	110250-55610	RING, RETAINING	1							
8	2	121250-55620	SPRING	1							
9	2	124550-55700	FILTER, FUEL L=90	1							
10	2	104200-55750	SCREW, M4	1							
11	2	24311-240100	O-RING, 1AP10A	1							
12	1	119632-55630	BRACKET, STRAINER	1							
13	1	124066-59100	CLIP, HOSE 8	1							
14	1	129150-59580	CAP	1							
15	1	26106-080142	BOLT, M8X 14 PLATED	1							
16	1	26014-080702	BOLT, M8X 70	1							
17	1	124767-59031	PIPE ASSY, FUEL	1							
18	2	101304-59020	JOINT, PIPE 12	1							
19	2	124766-59050	CLIP, HOSE 12	2							
20	2	124767-59080	PIPE, FUEL	1							
21	1	104200-59170	GASKET, 12	2							
22	1	119650-59200	BOLT, PIPE JOINT M12	1							
23	1	129335-55700	SEPARATOR ASSY,WATER	1							
24	2	104200-55321	VALVE, TAPER	1							
25	2	104200-55330	SPRING, VALVE	1							
26	2	104200-55341	HANDLE	1							
27	2	124064-55510	COVER	1							
28	2	102103-55520	O-RING	1							
29	2	110250-55610	RING, RETAINING	1							
30	2	121257-55720	SPRING	1							
31	2	121257-55731	FLOAT	1							
32	2	101720-55750	PLUG, 6	2							
33	2	104200-55750	SCREW, M4	1							
34	2	171081-55910	SCREEN	1							
35	2	23418-060000	GASKET, 6X1.0	2							
36	2	24311-240100	O-RING, 1AP10A	1							
37	1	119840-59601	BEND	1							
38	1	104264-59030	JOINT, PIPE 8	2							
39	1	105582-59150	BOLT, PIPE JOINT	2							
40	1	23414-080012	GASKET, 8X1.0	4							
41	1	121522-59100	PIPE, FUEL D12X500	1							
42	1	121454-59090	PIPE, FUEL D12X700	2							
43	1	121024-59090	PIPE, FUEL D12X450	1							
44	1	121250-59080	PIPE, FUEL D12X180	1							
45	1	124766-59050	CLIP, HOSE 12	8							

N:Old ◄Yes/No► New. Q:Old ◄No/Yes► New. R:Old ◄Yes/Yes► New. S:Old ◄No/No► New. W:Add. Z:Discontinued. F:Interchangeable by set. K:Q'ty Change

Copyright (C) YANMAR CO., LTD. All RightsReserved.

Fig.13. GOVERNOR

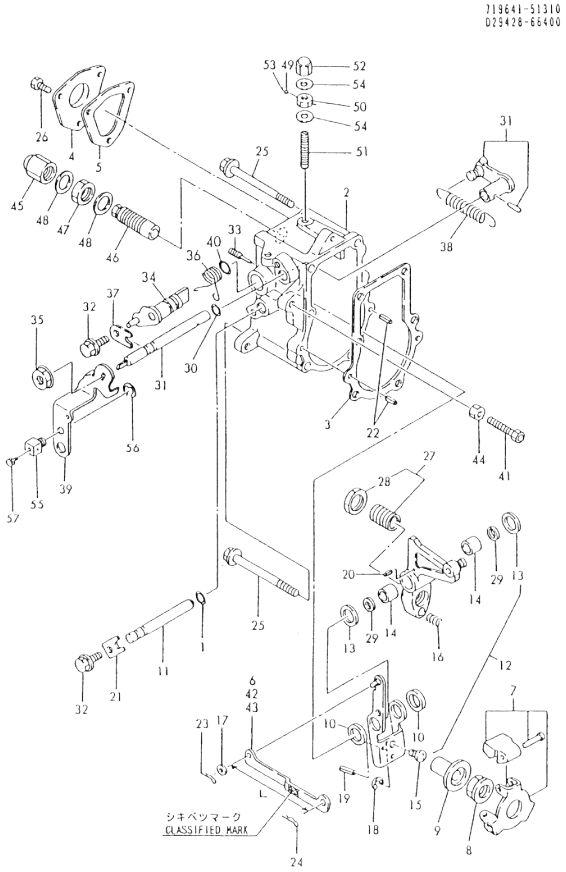

(A)=3TNA72L-UMS
(B)=
(C)=
(D)=
(E)=
(F)=

No.	Lev.	Parts No.	Description	Q'ty (A)	(B)	(C)	(D)	(E)	(F)	I	R
1	1	129155-51280	O-RING, S6	1							
2	1	119660-61013	CASE, GOVERNOR	1							
3	1	119660-61051	GASKET	1							
3-1	1	119660-61052	GASKET	1						N	
	(A=E41836)										
4	1	119660-61060	COVER, GOVERNOR CASE	1							
5	1	119660-61070	GASKET	1							
5-1	1	119660-61071	GASKET	1						N	
	(A=E37086)										
6	1	119660-61121	LINK, NO MARK	1							1
7	1	119600-61200	WEIGHT ASSY,GOVERNOR	1							
8	1	119660-61300	NUT	1							
9	1	119660-61341	SLEEVE	1							
10	1	129155-61480	SPACER ASSY	2							
11	1	119660-61491	SHAFT	1							
12	1	119600-61500	LEVER ASSY, GOVERNOR	1							
13	2	174307-51700	SHIM SET	2							
14	2	129155-61530	BUSH	2							
15	2	119600-61540	SHIFTER	1							
16	2	119600-61650	SPRING, STARTING	1							
17	2	22117-040000	WASHER, 4	1							
17-1	2	22117-040000	WASHER, 4	2						K	
	(A=EXXX)										
18	2	22272-000040	RING, E- 4	1							
19	2	22351-020004	PIN, SPRING 2.0X 4	1							
20	2	22351-030014	PIN, SPRING 3.0X14	1							
21	1	119660-61901	RETAINER, SHAFT	1							
22	1	22351-040010	PIN, SPRING 4.0X10	2							
23	1	22360-040000	PIN, SNAP 4	1							
24	1	22360-060000	PIN, SNAP 6	1							
25	1	26106-060702	BOLT, M6X 70 PLATED	6							
26	1	26116-050102	BOLT, M5X 10 PLATED	3							
27	1	119600-66700	ANGLEICH ASSY	1							
28	2	129155-61590	NUT, LOCK	1							
29	1	119660-61460	SHIM SET	1							
30	1	24341-000070	O-RING, 1AS7.0	1							
31	1	119621-66091	SHAFT ASSY	1							
32	1	26106-060102	BOLT, M6X 10 PLATED	2							
33	1	124250-03640	SCREW	1							
34	1	119230-66520	HANDLE, STOP	1							
35	1	194990-22050	NUT, M8	1							
36	1	119655-66680	SPRING, RETURN	1							
37	1	119600-61900	RETAINER, SHAFT	1							
38	1	119600-66020	SPRING, REGULATOR	1							
39	1	119640-66051	HANDLE, REGULATOR	1							
40	1	24311-240100	O-RING, 1AP10A	1							
41	1	26116-060304	BOLT, M6X 30 PLATED	1							
42	1	119660-61140	LINK, MARK :2	1							1
43	1	119660-61150	LINK, MARK :3	1							1
44	1	26756-060002	NUT, LOCK M6	1							
45	1	129100-61930	NUT, CAP	1							

Remarks
(1) SELECTIVE PARTS. CERTAIN THE CLASSIFICATION MARK, THEN PLACE YOUR ORDER. (ILLUSTRATION)

N:Old ←Yes/No→ New. Q:Old ←No/Yes→ New. R:Old ←Yes/Yes→ New. S:Old ←No/No→ New. W:Add. Z:Discontinued. F:Interchangeable by set. K:Q'ty Change

++ CONTINUE ++

Copyright (C) YANMAR CO., LTD. All RightsReserved.

Fig.13. GOVERNOR

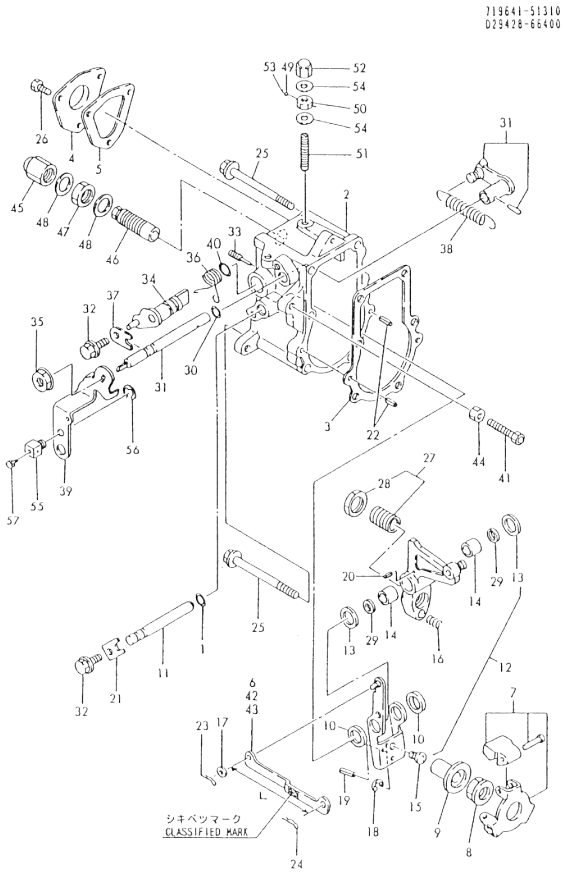

(A)=3TNA72L-UMS
(B)=
(C)=
(D)=
(E)=
(F)=

No.	Lev.	Parts No.	Description	Q'ty (A)	(B)	(C)	(D)	(E)	(F)	I	R
46	1	119600-66530	LIMITER ASSY, FUEL	1							
47	1	124772-66750	NUT, LOCK M12	1							
48	1	43400-500450	SEAL WASHER 12	2							
49	1	135210-61090	LEAD	1							
50	1	124550-66370	NUT, M6	1							
51	1	121575-66830	SCREW	1							
52	1	119600-66840	NUT, CAP	1							
53	1	22451-060000	WIRE, 0.6	1							
54	1	43400-500400	SEAL WASHER 6	2							
55	1	124066-03770	RETAINER	1							W
	(A=EXXX)										
56	1	22272-000050	RING, E- 5	1							W
	(A=EXXX)										
57	1	26116-040088	BOLT, M4X 8 PLATED	1							W
	(A=EXXX)										

Remarks
(1) SELECTIVE PARTS. CERTAIN THE CLASSIFICATION MARK, THEN PLACE YOUR ORDER. (ILLUSTRATION)

N:Old ←Yes/No→ New. Q:Old ←No/Yes→ New. R:Old ←Yes/Yes→ New. S:Old ←No/No→ New. W:Add. Z:Discontinued. F:Interchangeable by set. K:Q'ty Change

Copyright (C) YANMAR CO., LTD. All RightsReserved.

Fig.14. ENGINE STOP DEVICE

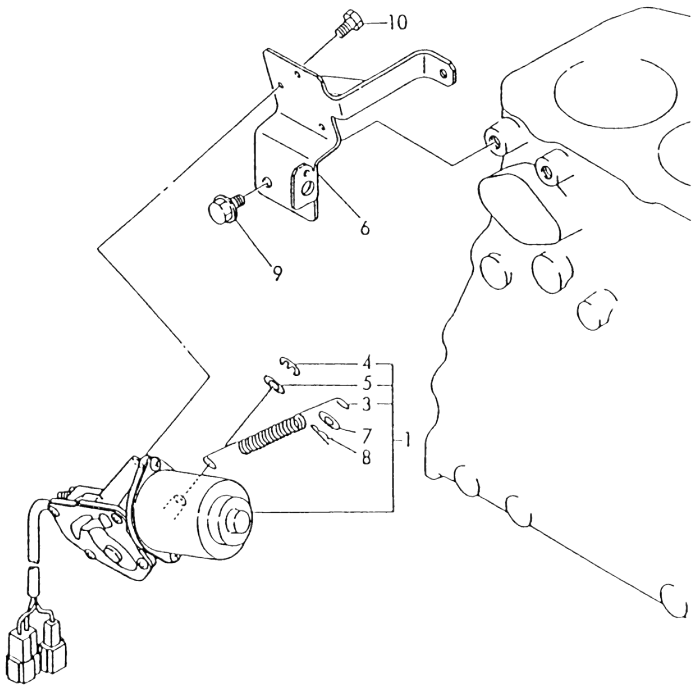

(A)=3TNA72L-UMS
(B)=
(C)=
(D)=
(E)=
(F)=

No.	Lev.	Parts No.	Description	Q'ty (A)	(B)	(C)	(D)	(E)	(F)	I	R
1	1	119230-66791	MOTOR ASSY, STOP	1							
3	2	129555-66820	SPRING, STOP MOTOR	1							
4	2	129566-66880	RING, SNAP	1							
5	2	129566-66890	WASHER	1							
6	1	119640-66810	BRACKET, STOP MOTOR	1							
6-1	1	119640-66811	BRACKET, STOP MOTOR	1							R
	(A=E45344)										
7	1	22117-080000	WASHER, 8	1							
8	1	22360-080000	SNAP PIN 8	1							
9	1	26106-080162	BOLT, M8X 16 PLATED	3							
10	1	26116-050122	BOLT, M5X 12 PLATED	3							
10-1	1	26116-050102	BOLT, M5X 10 PLATED	3							N
	(A=E37086)										

N:Old ◄Yes/No► New. Q:Old ◄No/Yes► New. R:Old ◄Yes/Yes► New. S:Old ◄No/No► New. W:Add. Z:Discontinued. F:Interchangeable by set. K:Q'ty Change

Copyright (C) YANMAR CO., LTD. All RightsReserved.

Fig.15. STARTING MOTOR

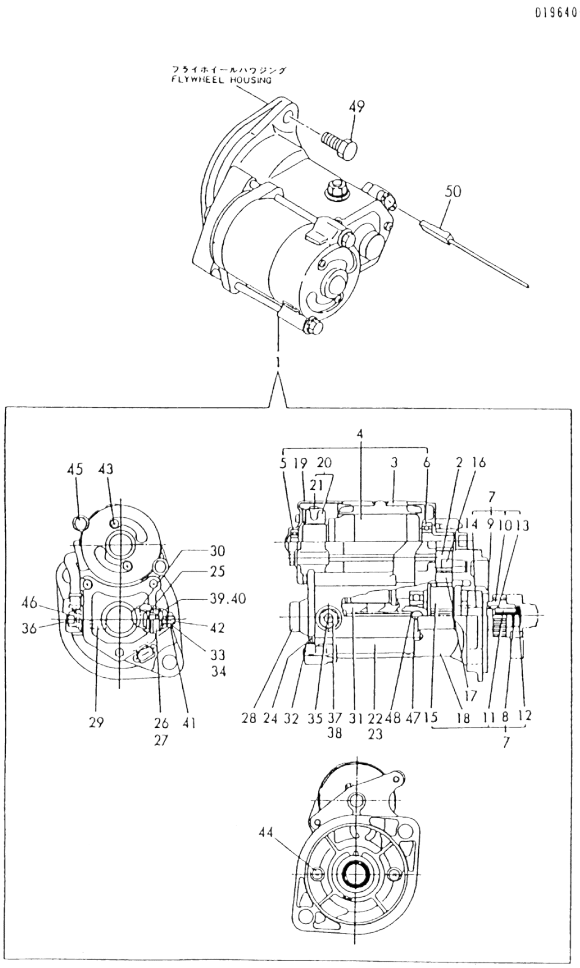

(A)=3TNA72L-UMS
(B)=
(C)=
(D)=
(E)=
(F)=

No.	Lev.	Parts No.	Description	Q'ty (A)	(B)	(C)	(D)	(E)	(F)	I	R
1	1	119620-77011	STARTER	1							
2	2	X0280630011	RETAINER	1							
3	2	X0281003751	YOKE ASSY	1							
4	2	X0282001531	ARMATURE ASSY	1							
5	3	X9491001360	BEARING	1							
6	3	X9491001860	BALL BEARING	1							
7	2	X0283005050	CLUTCH, STARTER	1							
8	3	X0280210230	NUT	1							
9	3	X0283270140	RETAINER	1							
10	3	X0283715030	PINION, STARTER	1							
11	3	X0283810040	SHAFT	1							
12	3	X9490721080	RING	1							
13	3	X9491703371	SPRING, COIL	1							
14	3	X9491704260	SPRING	1							
15	3	121120-77930	CASE ASSY, STARTER	1							
16	2	X0283060061	ROLLER	5							
17	2	X0283711420	PINION	1							
18	2	X0284004910	HOUSING, STARTER	1							
19	2	X0285040631	FRAME ASSY	1							
20	2	X0285100460	HOLDER ASSY, BRUSH	1							
21	3	X9491730461	SPRING	4							
22	2	X0534006460	SWITCH, MAGNETIC	1							
23	3	X0534040320	GASKET	1							
24	3	X0534490120	BUSH	1							
25	3	X0534490120	BUSH	1							
26	3	X0534490230	BUSH	1							
27	3	X0534490230	BUSH	1							
28	3	X0535050620	COVER	1							
29	3	X0535130241	PLATE (B)	1							
30	3	X0535130320	PLATE (A)	1							
31	3	X0536600401	PLUNGER	1							
32	3	X9151005141	BOLT W/WASHER	3							
33	3	X9490170900	WASHER	1							
34	3	X9490170900	WASHER	1							
35	3	X9490441303	BOLT	1							
36	3	X9490441312	BOLT	1							
37	3	X9490502820	NUT	1							
38	3	X9490502820	NUT	1							
39	3	X9491402100	O-RING	1							
40	3	X9491402100	O-RING	1							
41	2	X9019008651	NUT	1							
42	2	X9025808001	WASHER	1							
43	2	X9490071810	SCREW W/WASHER	2							
44	2	X9490071970	SCREW W/WASHER	2							
45	2	X9490423330	BOLT W/WASHER	2							
46	2	X9490561370	NUT	1							
47	2	X9491200240	BALL	1							
48	2	X9491703380	SPRING	1							
49	1	26116-120252	BOLT, M12X 25 PLATED	2							
50	1	119643-77900	CONNECTOR, STARTER	1							Z
	(A=EXXX)										

N:Old ←Yes/No→ New. Q:Old ←No/Yes→ New. R:Old ←Yes/Yes→ New. S:Old ←No/No→ New. W:Add. Z:Discontinued. F:Interchangeable by set. K:Q'ty Change

Copyright (C) YANMAR CO., LTD. All RightsReserved.

Fig.16. GENERATOR

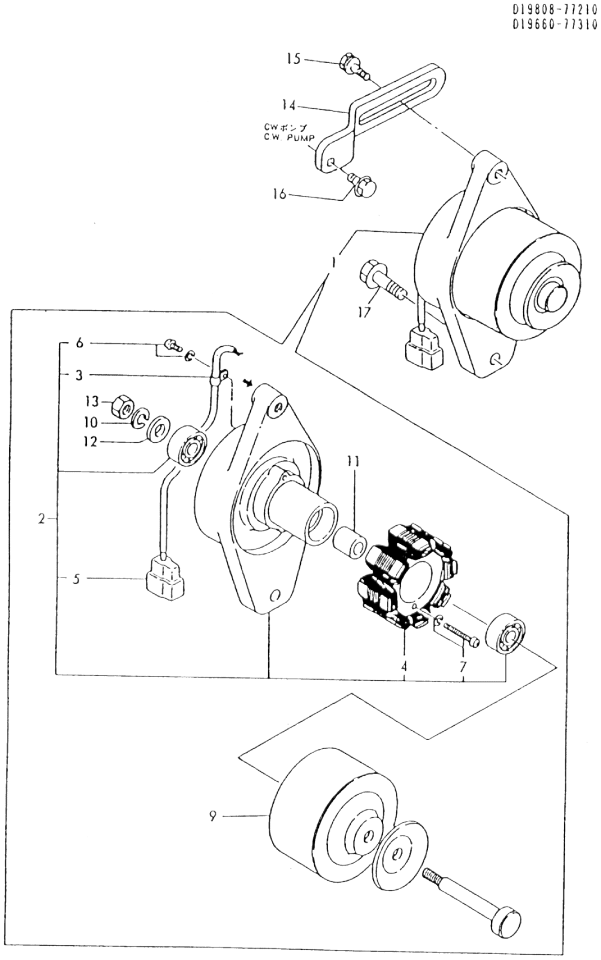

(A)=3TNA72L-UMS
(B)=
(C)=
(D)=
(E)=
(F)=

No.	Lev.	Parts No.	Description	Q'ty (A)	(B)	(C)	(D)	(E)	(F)	I	R
1	1	129150-77202	GENERATOR	1							
2	2	129150-77210	PLATE ASSY	1							
3	3	XM069000000	CLAMP	1							
4	3	XM081780000	STATOR	1							
5	3	XM178780000	COUPLER	1							
6	3	XYSPS400800	SCREW	1							
7	3	XYSPS402400	SCREW	2							
9	2	129150-77230	FLYWHEEL ASSY	1							
10	2	XM219230000	WASHER, SPRING	1							
11	2	XM329830000	COLLAR	1							
12	2	XM860250000	WASHER, 10	1							
13	2	XM863720000	NUT	1							
14	1	119660-77330	ADJUSTER	1							
15	1	26014-080252	BOLT, M8X 25	1							
16	1	26106-080162	BOLT, M8X 16 PLATED	1							
17	1	26106-100302	BOLT, M10X 30 PLATED	1							

N:Old ←Yes/No→ New. Q:Old ←No/Yes→ New. R:Old ←Yes/Yes→ New. S:Old ←No/No→ New. W:Add. Z:Discontinued. F:Interchangeable by set. K:Q'ty Change

Copyright (C) YANMAR CO., LTD. All RightsReserved.

Fig.17. ELECTRIC PART

(A)=3TNA72L-UMS
(B)=
(C)=
(D)=
(E)=
(F)=

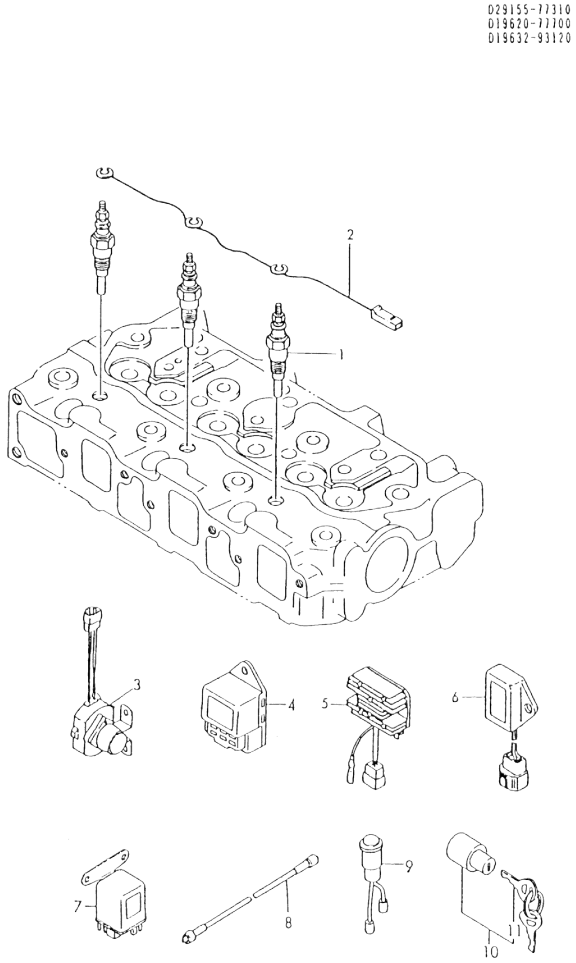

No.	Lev.	Parts No.	Description	Q'ty (A)	(B)	(C)	(D)	(E)	(F)	I	R
1	1	129155-77801	PLUG, GLOW	3							
2	1	119620-77820	CONNECTOR, GLOW PLUG	1							
3	1	119247-77100	RELAY, SAFETY	2							
4	1	119650-77900	CONTROLLER	1							
5	1	119640-77711	LIMITER, CURRENT	1							
6	1	121522-77721	INDICATOR	1							
7	1	119650-77910	RELAY ASSY, GLOW	1							
8	1	124737-91420	CABLE, TACHOMETER	1							
9	1	124770-91040	LAMP, PILOT 12V 3.4W	1							
10	1	194940-52110	SWITCH, STARTING	1							
11	2	198360-52160	KEY ASSY	1							

N:Old ◄Yes/No► New. Q:Old ◄No/Yes► New. R:Old ◄Yes/Yes► New. S:Old ◄No/No► New. W:Add. Z:Discontinued. F:Interchangeable by set. K:Q'ty Change

Copyright (C) YANMAR CO., LTD. All RightsReserved.

Fig.18. GASKET SET(OPTIONAL)

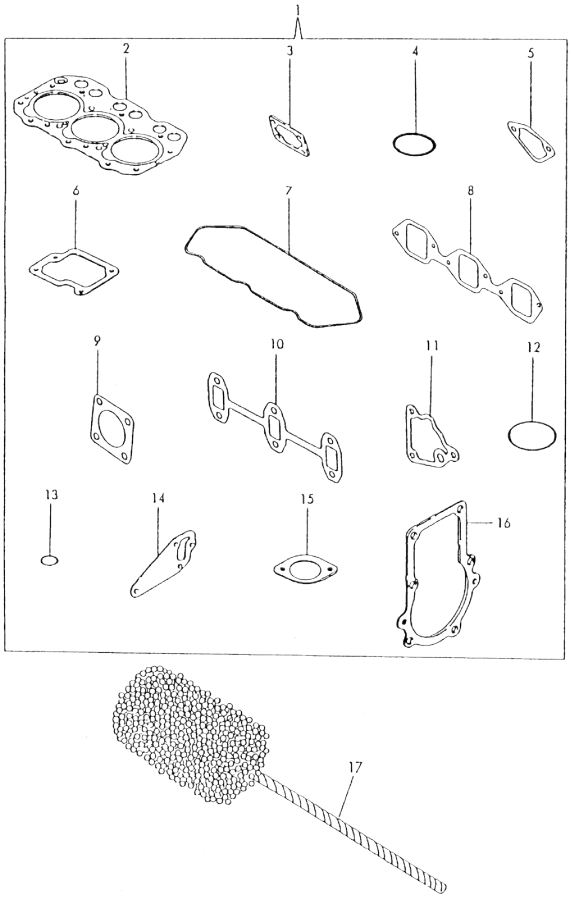

Remarks
(1)OPTIONAL PART.

(A)=3TNA72L-UMS (D)=
(B)= (E)=
(C)= (F)=

No.	Lev.	Parts No.	Description	Q'ty (A)	(B)	(C)	(D)	(E)	(F)	I	R
1	1	719632-92600	GASKET SET	1							1
1-1	1	719632-92601	GASKET SET	1						N	1
	(A=EXXX)										
2	2	119610-01340	GASKET, HEAD	1							
3	2	119660-01561	GASKET	1							
3-1	2	119660-01562	GASKET	1						N	
	(A=EXXX)										
4	2	24311-000320	O-RING, 1AP32.0	1							
5	2	121520-01850	GASKET	1							
5-1	2	121520-01851	GASKET	1						N	
	(A=EXXX)										
6	2	119620-03030	GASKET	1							
6-1	2	119620-03031	GASKET	1						N	
	(A=EXXX)										
7	2	119620-11310	GASKET, BONNET	1							
8	2	119620-12110	GASKET, MANIFOLD	1							
8-1	2	119620-12111	GASKET, MANIFOLD	1						N	
	(A=E41836)										
9	2	124701-11910	GASKET, SILENCER	1							
9-1	2	124701-11911	GASKET, SILENCER	1						N	
	(A=E41836)										
10	2	119620-13110	GASKET	1							
11	2	119660-35112	GASKET	1							
11-1	2	119660-35113	GASKET	1						N	
	(A=E37086)										
12	2	124450-35110	O-RING	1							
13	2	24311-000160	O-RING, 1AP16.0	1							
14	2	119620-42020	GASKET, WATER PUMP	1							
15	2	129350-49540	GASKET	1							
15-1	2	129350-49541	GASKET	1						N	
	(A=E37086)										
16	2	119660-61051	GASKET	1							
16-1	2	119660-61052	GASKET	1						N	
	(A=E41836)										
17	1	129400-92410	FLEX HORN	1							1

N:Old ◄Yes/No► New. Q:Old ◄No/Yes► New. R:Old ◄Yes/Yes► New. S:Old ◄No/No► New. W:Add. Z:Discontinued. F:Interchangeable by set. K:Q'ty Change

Copyright (C) YANMAR CO., LTD. All RightsReserved.

Parts No. Index

Parts No.	Fig. No.	Ref. No.
101158-11190	4	10
101304-59020	12	18
101720-55750	12	32
102103-55520	12	6
		28
104200-55321	12	2
		24
104200-55330	12	3
		25
104200-55341	12	26
104200-55750	12	10
		33
104200-59170	12	21
104211-11370	4	13
104264-59030	12	38
105010-11230	4	24
		27
105025-59550	11	47
105225-23200	8	18
105546-51330	11	8
105582-59150	12	39
106800-59560	10	34
110250-55610	12	7
		29
114250-53130	11	31
114250-53400	11	33
119230-66520	13	34
119230-66791	14	1
119247-77100	17	3
119260-59520	11	45
119260-59530	11	46
119305-35151	9	8 -1
119600-01050	1	2
119600-01600	3	12
119600-01722	3	4
119600-11450	4	16
119600-11460	4	17
119600-35081	9	14
119600-44500	10	17
119600-52021	2	23
119600-61200	13	7
119600-61500	13	12
119600-61540	13	15
119600-61650	13	16
119600-61900	13	37
119600-66020	13	38
119600-66530	13	46
119600-66700	13	27
119600-66840	13	52
119610-01340	1	14

Parts No.	Fig. No.	Ref. No.
119610-01340	18	2
119610-01490	2	1
119610-01590	2	5
119620-01200	1	13
119620-01620	3	7
119620-01750	3	14
119620-01800	2	6
119620-01950	2	8
119620-02020	1	7
119620-02410	1	10
119620-02450	1	11
	7	2 A
119620-03020	4	41
119620-03030	4	42
	18	6
119620-03031	4	42 -1
	18	6 -1
119620-11100	4	6
119620-11110	4	7
119620-11120	4	8
119620-11180	4	9
119620-11200	4	19
119620-11240	4	20
119620-11260	4	29
119620-11280	4	30
119620-11310	4	39
	18	7
119620-11330	4	36 -1
119620-11350	4	33
119620-11390	4	40
119620-11801	4	15
119620-12110	5	15
	18	8
119620-12111	5	15 -1
	18	8 -1
119620-13110	6	7
	18	10
119620-14100	7	2
119620-14200	7	3
119620-14400	7	4
119620-21941	8	6
119620-22090	8	11
119620-22300	8	13
119620-23910	8	20
119620-25102	7	15
119620-25912	7	16
119620-42020	10	2
	18	14
119620-42320	10	1 J
119620-51101	11	2

Parts No.	Fig. No.	Ref. No.
119620-51170	11	3
119620-51180	11	4
119620-51190	11	5
119620-51250	11	6
119620-51300	11	7
119620-51340	11	9
119620-51350	11	10
119620-51370	11	11
119620-51450	11	12
119620-51461	11	13
119620-51510	11	15
119620-51650	11	17
119620-51660	11	18
119620-51680	11	20
119620-51700	11	21
119620-53000	11	27
119620-53080	11	28
119620-53120	11	30
119620-53140	11	32
119620-59700	11	50
119620-59811	11	38
119620-59821	11	39
119620-59831	11	40
119620-77011	15	1
119620-77820	17	2
119621-21680	8	5
119621-66091	13	31
119629-14580	7	1
119631-13101	6	6
119631-13650	6	3
119631-34800	9	4
119632-07900	4	14
119632-12211	5	17
119632-12510	5	1
119632-12551	5	7
119632-12560	5	9
119632-12590	5	8
119632-12810	5	22
119632-13511	6	2
119632-49020	10	26
119632-55620	12	1
119632-55630	12	12
119640-12580	5	10
119640-21590	8	9
119640-42290	10	4
119640-66051	13	39
119640-66810	14	6
119640-66811	14	6 -1
119640-77711	17	5
119642-42350	10	5

Parts No.	Fig. No.	Ref. No.
119642-59540	11	43
119642-59550	11	48
119642-59570	11	49
119643-77900	15	50
119645-12100	5	14
119650-44900	10	15
119650-59200	12	22
119650-77900	17	4
119650-77910	17	7
119655-66680	13	36
119660-01510	2	2
119660-01551	2	16
119660-01561	2	17
	18	3
119660-01562	2	17 -1
	18	3 -1
119660-01570	2	18
119660-01640	3	8
119660-01821	7	6
119660-01911	2	7
119660-21201	8	2
119660-21651	8	4
119660-25022	7	13
119660-25052	7	14
119660-25902	7	8 A
		19
119660-32001	9	1
119660-32020	9	2
119660-35102	9	6
119660-35112	9	7
	18	11
119660-35113	9	7 -1
	18	11 -1
119660-35150	9	8
119660-35300	9	10
119660-42003	10	1
119660-42004	10	1 -1
119660-51500	11	14
119660-51530	11	16
119660-61013	13	2
119660-61051	13	3
	18	16
119660-61052	13	3 -1
	18	16 -1
119660-61060	13	4
119660-61070	13	5
119660-61071	13	5 -1
119660-61121	13	6
119660-61140	13	42
119660-61150	13	43

Parts No. Index

Parts No.	Fig. No.	Ref. No.
119660-61300	13	8
119660-61341	13	9
119660-61460	13	29
119660-61491	13	11
119660-61901	13	21
119660-77330	16	14
119688-49010	10	25
119810-55340	12	4
119840-59601	12	37
119865-21600	8	10
121024-12660	5	2
121024-59090	10	33
	12	43
121111-21501	8	8
121120-01620	3	13
121120-13580	6	14
121120-13590	6	13
121120-77930	15	15
121250-44901	10	13
121250-55620	12	8
121250-59080	11	42
	12	44
121254-55510	12	5
121257-55720	12	30
121257-55731	12	31
121450-01560	2	3
121450-44531	10	21
121450-44740	10	6
121454-59090	12	42
121465-12510	5	4
121465-12700	5	3
121468-44511	10	19
121468-44540	10	20
121520-01850	2	22
	18	5
121520-01851	2	22 -1
	18	5 -1
121520-34810	9	5
121522-59100	12	41
121522-77721	17	6
121550-49111	1	15
121575-66830	13	51
121850-11860	4	3
124064-12680	5	5
124064-12690	5	6
124064-55510	12	27
124066-03770	13	55
124066-59100	11	44
	12	13
124085-02220	3	9

Parts No.	Fig. No.	Ref. No.
124160-01751	2	19
	4	67
124160-11340	4	12
124160-11360	4	45
124160-39450	9	17
124250-03640	13	33
124450-35110	9	9
	18	12
124450-44560	10	23
124450-44590	10	18
124465-44950	10	14
124550-55700	12	9
124550-59820	11	51
124550-66370	13	50
124574-44761	10	7
124701-11910	6	1
	18	9
124701-11911	6	1 -1
	18	9 -1
124737-91420	17	8
124766-59050	10	35
	11	41
	12	19
		45
124767-59031	12	17
124767-59080	12	20
124770-91040	17	9
124772-66750	13	47
124950-11340	4	11
129100-01580	3	11
	8	3 A
		7
129100-61930	13	45
129132-12800	5	19
129132-12860	5	21
129150-35350	9	11
129150-49080	10	29
129150-49100	10	28
129150-49360	10	16
129150-59120	11	35
129150-59130	11	36
129150-59580	12	14
129150-77202	16	1
129150-77210	16	2
129150-77230	16	9
129150-91400	2	25
129155-51280	13	1
129155-61480	13	10
129155-61530	13	14
129155-61590	13	28

Parts No.	Fig. No.	Ref. No.
129155-61830	11	34
129155-77801	17	1
129335-55700	12	23
129350-49530	10	9
129350-49540	10	10
	18	15
129350-49541	10	10 -1
	18	15 -1
129350-49800	10	11
129400-92410	18	17
129555-66820	14	3
129566-66880	14	4
129566-66890	14	5
135210-61090	13	49
171081-55910	12	34
171301-01640	3	2
174307-51700	13	13
194940-52110	17	10
194990-22050	2	9
	6	4
		8
		9
	13	35
198360-52160	17	11
22117-040000	13	17
		17 -1
22117-080000	14	7
22137-040000	11	22
22137-100000	6	17
22217-040000	11	23
22217-050000	4	43
22217-100000	6	18
22242-000120	4	31
22242-000200	7	17
22252-000210	8	14
22272-000040	13	18
22272-000050	13	56
22351-020004	13	19
22351-030014	13	20
22351-040010	2	4
	13	22
22351-060012	4	2
22360-040000	13	23
22360-060000	13	24
22360-080000	14	8
22451-060000	13	53
22512-040120	7	2 B
		5
		8
	8	3

Parts No.	Fig. No.	Ref. No.
23000-060000	5	11
		18
23010-038000	10	27
23065-070130	10	22
23065-120500	4	46
23414-080012	11	52
	12	40
23414-140000	11	53
23418-060000	12	35
23871-010000	1	3
24101-062034	7	9
24102-063034	7	8 B
		10
24311-000120	2	10
	4	47
	9	15
24311-000160	9	12
	18	13
24311-000320	2	20
	4	68
	18	4
24311-240100	12	11
		36
	13	40
24341-000070	13	30
24341-000240	2	27
	3	3
26014-060202	2	24
26014-060252	10	8
26014-080202	5	12
	6	5
26014-080252	16	15
26014-080702	12	16
26022-040082	11	24
26106-060102	9	16
	13	32
26106-060122	1	12
	3	5
	4	18
	7	18
26106-060162	2	11
		28
	7	11
26106-060202	5	16
26106-060222	3	10
26106-060302	2	12
26106-060452	3	6
26106-060602	2	13
		14
26106-060702	13	25

Parts No. Index

Parts No.	Fig. No.	Ref. No.
26106-060802	2	15
26106-080142	12	15
26106-080162	14	9
	16	16
26106-080202	9	13
	10	12
26106-080402	6	10
26106-080452	4	34
	10	3
26106-100302	16	17
26106-100652	6	15
26116-040088	13	57
26116-050102	13	26
	14	10 -1
26116-050122	14	10
26116-060304	13	41
26116-120252	15	49
26206-100252	3	15
26216-080222	6	11
26216-080552	6	12
26366-060002	2	21
26366-080002	4	35
	5	13
26450-060202	9	3
26557-050102	4	44
26587-040102	11	25
26587-080102	7	12
26706-100002	6	16
26756-060002	4	25
		28
	13	44
26979-050162	4	32
27221-050080	4	4
27231-450000	1	4
27241-120000	1	5
27241-300000	1	6
27241-400000	4	5
27310-070001	4	10 -1
43400-500400	13	54
43400-500450	13	48
719610-01560	1	1
719620-02800	1	8
719620-02870	1	16
719620-02930	1	9
719620-11520	4	36
719620-11650	4	23
719620-11660	4	26
719620-22500	8	12
719620-22540	8	16
719620-22820	8	15

Parts No.	Fig. No.	Ref. No.
719620-23100	8	17
719620-23600	8	19
719620-23610	8	21
719620-53100	11	26
719621-51100	11	1
719631-01540	3	1
719632-92600	18	1
719632-92601	18	1 -1
719660-11700	4	1
719660-14590	7	7
719660-21700	8	1 -1
719660-21701	8	1
X0280210230	15	8
X0280630011	15	2
X0281003751	15	3
X0282001531	15	4
X0283005050	15	7
X0283060061	15	16
X0283270140	15	9
X0283711420	15	17
X0283715030	15	10
X0283810040	15	11
X0284004910	15	18
X0285040631	15	19
X0285100460	15	20
X0534006460	15	22
X0534040320	15	23
X0534490120	15	24
		25
X0534490230	15	26
		27
X0535050620	15	28
X0535130241	15	29
X0535130320	15	30
X0536600401	15	31
X9019008651	15	41
X9025808001	15	42
X9151005141	15	32
X9490071810	15	43
X9490071970	15	44
X9490170900	15	33
		34
X9490423330	15	45
X9490441303	15	35
X9490441312	15	36
X9490502820	15	37
		38
X9490561370	15	46
X9490721080	15	12
X9491001360	15	5

Parts No.	Fig. No.	Ref. No.
X9491001860	15	6
X9491200240	15	47
X9491402100	15	39
		40
X9491703371	15	13
X9491703380	15	48
X9491704260	15	14
X9491730461	15	21
XM069000000	16	3
XM081780000	16	4
XM178780000	16	5
XM219230000	16	10
XM329830000	16	11
XM860250000	16	12
XM863720000	16	13
XYSPS400800	16	6
XYSPS402400	16	7

Parts No.	Fig. No.	Ref. No.