YANMAR

PARTS CATALOG

0CV10-M92200EN

Last update Sep., 2014

PREFACE

1.This Parts Catalog carries all parts incorporated in YANMAR Model 2TNE68-DM4 engine manufactured since January, 2004.

2.Each illustration corresponds to the parts list on the followingpage.

3.When ordering parts,clearly write down the engine model and serial number,as well as the name and number of each part in your order sheet. This will help insure reliable delivery of the parts youhave ordered.

Directions for the Parts Catalog.

1.The parts stipulated in this Parts Catalog are not necessarily standard equipped parts.
2.Parts may change without prior notice.
3.The following is an example of the Parts Catalog format.

0CF10-G21601 29. FUEL INJECTION PUMP(W/BOOST)

(A)=4JH-DT
(B)=4JH-DTZ
(C)=4JH-DTZP
(D)=4JH-DTZA
(E)=4JH-DTZY
(F)=

① REF.	② LEV.	PARTS NO.	DESCRIPTION	Q'TY (A)	(B)	(C)	(D)	(E)	(F)	③ I	⑤ R
1	1	729595-51390	FUEL INJECTION PUMP	1	1	1	1	1			1
1-1	1	729595-51391	FUEL INJECTION PUMP	1	1	1	1	1		N	1
	(A=E00185)	(B=E00200)									
3	2	26022-060162	SCREW M 6X 16	9	9	9	9	9			
3-1 ④	2	26022-060162	SCREW M 6X 16	4	4	4	4	4		K	
	(A=E00156)	(B=E00156)	(C=E00156) (D=E00156)	(E=E00156)							
4	2	129470-51040	CAMSHAFT	1	1	1	1	1			
5	2	122710-51050	BEARING, ROLLER	2	2	2	2	2			
6	2	129470-51060	RETAINER	1	1	1	1	1			

Remarks
(1) BOOST COMPEMSATOR TYPE. OPTIONAL PART, TO E00155,(4JH-DT, 4JH-DTZ

① Ref. No.

The Ref. No. listed may not be in accordance with the illustration Ref. No.

(Ex.) Illustration No. 1 — List Ref No. 1 (Before change) → 1- 1 (After change)

For interchangeable symbols N, R and K, illustrations for new parts may be abbreviated.

② Lev. (Level)

Level indication
The numbers below indicate the level of relativity towards the main part.
1 ----- Main parts (Assembly parts)
2 ----- Sub component included in " 1 ".
3 ----- Sub component included in " 2 ".
Note) Parts that are not for sale are partially illustrated but not listed.

③ Interchangeability Mark

When a part change takes place, one of the following interchangeability symbols is indicated beside the part.

Symbol	Interchangeability	Contents note
N	Old ← Yes / No → New	New Part is interchangeable for Old Part but Old Part is not interchangeable for New Part.
Q	Old ← No / Yes → New	New Part is not interchangeable for Old Part but Old Part is interchangeable for New Part.
R	Old ← Yes / Yes → New	New/ Old Parts are both interchangeable.
S	Old ← No / No → New	New/ Old Parts are both not interchangeable.
W		Part newly added.
Z		Part discontinued.
F		Not interchangeable by a single part but interchangeable together with related parts.
K		Changes only for used parts quantities.

④ Effective Machine No.

When a part changes, the effective Machine No. will be indicated in the (A)-(F) column.

Product Symbol	Product No.	Product Symbol	Product No.
C	Clutch No. Compressor No.	F	Machine No. (Agricultural Equip.)
D	Drive No.	M	Machine No.
E	Engine No.		

Note 1) A date may follow the symbol. (Ex.) 1996.01
Note 2) " XXXXX " and " ZZZZZ " are for parts that could not be predicted or for engine models that could not be identified.
Note 3) (A=E00185) is the E (Engine Serial Number) for the column (A) model (in this case 4JH-DT) after the parts design change.

⑤ Remarks Mark

Figures or alphabets (symbols) are entered in the remarks column.
The comments (remarks) on parts that are indicated at the bottom of the illustration are the same symbols as those stated above.

Contents

0CV10-M92200

Fig. No.	Fig. Name
ENGINE(2TNE68-DM4)	
1.	CYLINDER BLOCK
2.	GEAR HOUSING
3.	OIL SUMP
4.	CYLINDER HEAD & BONNET
5.	SUCTION MANIFOLD
6.	EXHAUST MANIFOLD
7.	CAMSHAFT & DRIVING GEAR
8.	CRANKSHAFT & PISTON
9.	LUB.OIL SYSTEM
10.	COOLING WATER SYSTEM
11.	FUEL INJECTION PUMP
12.	GOVERNOR
13.	FUEL INJECTION VALVE
14.	FUEL LINE
15.	STARTING MOTOR
16.	GENERATOR
17.	GASKET SET

Fig.1. CYLINDER BLOCK

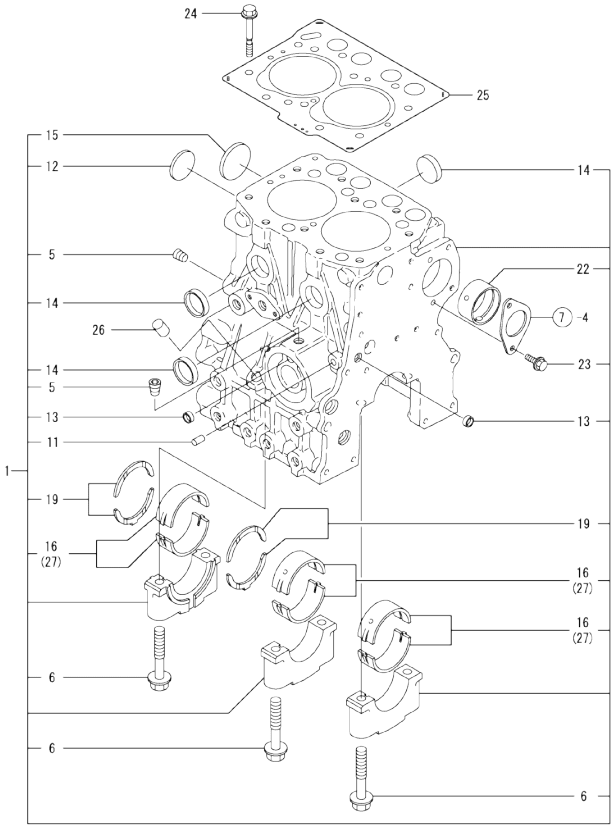

(A)=2TNE68-DM4
(B)=
(C)=
(D)=
(E)=
(F)=

No.	Lev.	Parts No.	Description	Q'ty (A)	(B)	(C)	(D)	(E)	(F)	I	R
1	1	719325-01560	BLOCK ASSY, CYLINDER	1							
5	2	124060-01050	PLUG, PT1/8	2							
6	2	119260-02020	BOLT, METAL CAP	6							
11	2	27221-060100	PLUG, 6X10	1							
12	2	119265-01250	PLUG, 40	1							
13	2	27241-100000	PLUG, 10	2							
14	2	27241-250000	PLUG, 25	3							
15	2	27241-300000	PLUG 30	1							
16	2	119260-02800	BEARING, MAIN	3							
19	2	119260-02930	BEARING, THRUST	2							
22	2	119266-02410	BUSH	1							
23	2	26106-060122	BOLT, M6X 12 PLATED	2							
24	1	119266-01200	BOLT, HEAD	10							
25	1	119309-01330	GASKET, CYL. HEAD	1							
26	1	119309-01810	PLUG	1							
27	1	719260-02870	BEARING, 0.25 US	3							1

Remarks
(1) UNDER-SIZE(U.S=0.25)PART.

N:Old $\frac{\text{Yes}}{\text{No}}$ New. Q:Old $\frac{\text{No}}{\text{Yes}}$ New. R:Old $\frac{\text{Yes}}{\text{Yes}}$ New. S:Old $\frac{\text{No}}{\text{No}}$ New. W:Add. Z:Discontinued. F:Interchangeable by set. K:Q'ty Change

Copyright (C) YANMAR CO., LTD. All RightsReserved.

Fig.2. GEAR HOUSING

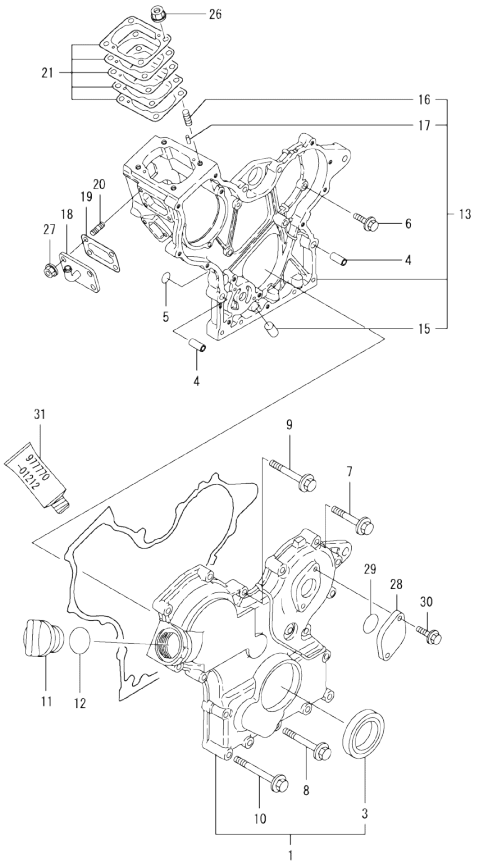

(A)=2TNE68-DM4
(B)=
(C)=
(D)=
(E)=
(F)=

No.	Lev.	Parts No.	Description	Q'ty (A)	(B)	(C)	(D)	(E)	(F)	I	R
1	1	119260-01590	COVER ASSY,GEAR CASE	1							
3	2	119620-01800	SEAL, OIL	1							
4	1	119660-01911	PIPE, KNOCK	4							
5	1	119624-32040	O-RING, P12.0	2							
6	1	26106-060162	BOLT, M6X 16 PLATED	5							
7	1	26106-060302	BOLT, M6X 30 PLATED	5							
8	1	26106-060402	BOLT, M6X 40 PLATED	3							
9	1	26106-060502	BOLT, M6X 50 PLATED	4							
10	1	26106-060652	BOLT, M6X 65 PLATED	6							
11	1	124160-01751	COVER, FILLER	1							
12	1	24311-000320	O-RING, 1AP32.0	1							
13	1	119305-01490	CASE ASSY, GEAR	1							
15	2	119260-01510	PLUG	1							
16	2	121450-01560	STUD, M8X22	4							
17	2	22351-040010	PIN, SPRING 4.0X10	2							
18	1	119309-01550	COVER ASSY	1							
19	1	119660-01562	GASKET	1							
20	1	119660-01570	STUD, M6X12	4							
21	1	119305-01950	SHIM SET, ADJUSTING	1							
26	1	194990-22050	NUT, M8	4							
27	1	26366-060002	NUT, M6	4							
28	1	121023-01550	COVER	1							
29	1	24341-000240	O-RING, 1AS24.0	1							
30	1	26106-060162	BOLT, M6X 16 PLATED	2							
31	1	977770-01212	GASKET, LIQUID	1							1

Remarks
(1) OPTIONAL PART.

N:Old $\frac{\text{Yes}}{\text{No}}$ New. Q:Old $\frac{\text{No}}{\text{Yes}}$ New. R:Old $\frac{\text{Yes}}{\text{Yes}}$ New. S:Old $\frac{\text{No}}{\text{No}}$ New. W:Add. Z:Discontinued. F:Interchangeable by set. K:Q'ty Change

Copyright (C) YANMAR CO., LTD. All RightsReserved.

Fig.3. OIL SUMP

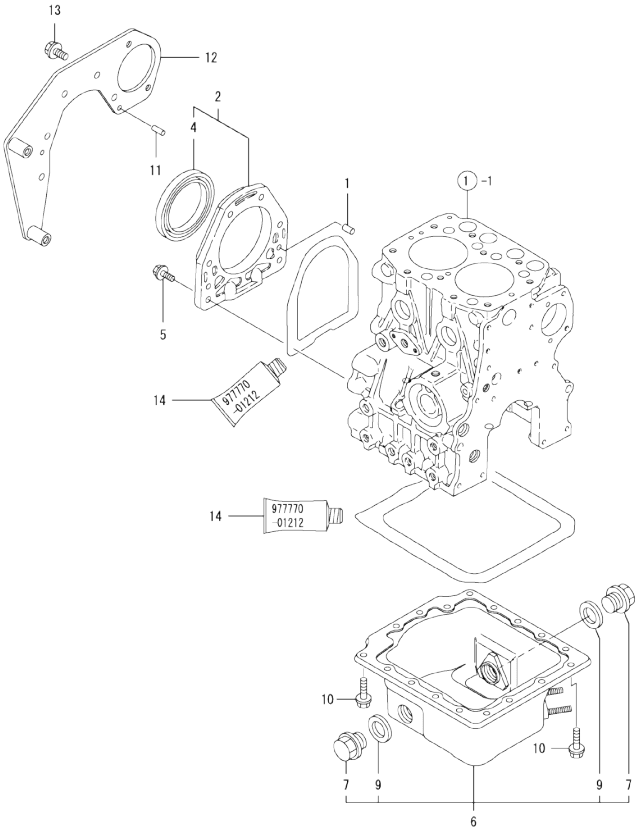

(A)=2TNE68-DM4
(B)=
(C)=
(D)=
(E)=
(F)=

No.	Lev.	Parts No.	Description	Q'ty (A)	(B)	(C)	(D)	(E)	(F)	I	R
1	1	119620-01620	PIN, M6X10	2							
2	1	719620-01650	CASE ASSY, OIL SEAL	1							
4	2	124085-02220	SEAL, OIL	1							
5	1	26106-060222	BOLT, M6X 22 PLATED	6							
6	1	119520-01771	SUMP ASSY, OIL	1							
6-1	1	119520-01772	SUMP ASSY, OIL	1							R
	(A=*2009.09.)										
7	2	119640-01640	PLUG, DRAIN M22	2							
9	2	22190-220002	WASHER, SEAL 22	2							
10	1	26106-060102	BOLT, M6X 10 PLATED	17							
11	1	129100-01580	PIN, M8X16	2							
12	1	119520-01611	BRACKET, STARTER	1							
13	1	26206-100202	BOLT, M10X 20 PLATED	6							
14	1	977770-01212	GASKET, LIQUID	1							1

Remarks
(1) OPTIONAL PART.

N:Old ◄Yes/No► New. Q:Old ◄No/Yes► New. R:Old ◄Yes/Yes► New. S:Old ◄No/No► New. W:Add. Z:Discontinued. F:Interchangeable by set. K:Q'ty Change

Copyright (C) YANMAR CO., LTD. All RightsReserved.

Fig.4. CYLINDER HEAD & BONNET

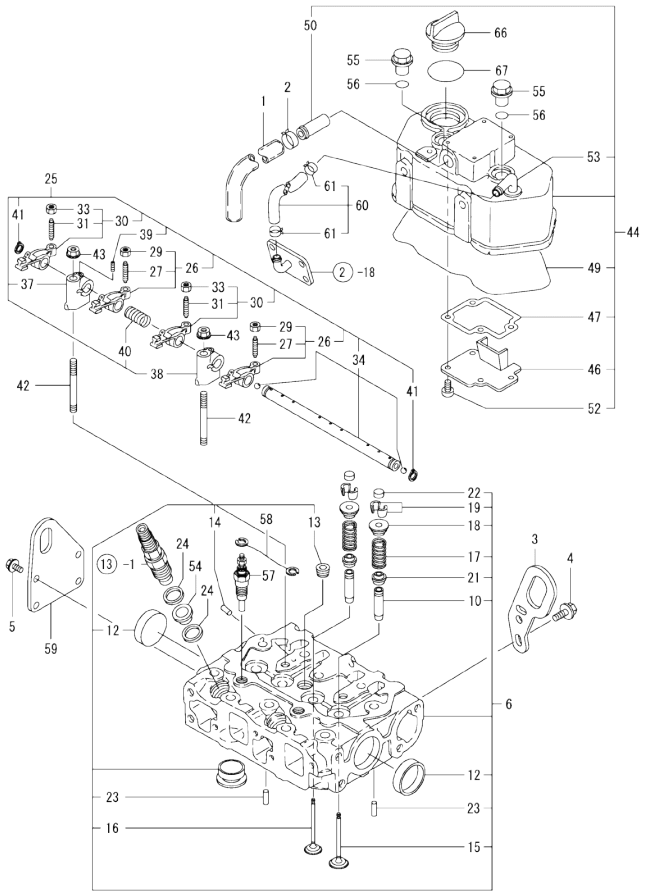

No.	Lev.	Parts No.	Description	Q'ty (A)	(B)	(C)	(D)	(E)	(F)	I	R
			(A)=2TNE68-DM4 (B)= (C)=				(D)= (E)= (F)=				
1	1	119285-03140	PIPE , BREATHER	1							
2	1	171008-03990	CLIP, HOSE 18.5	2							
3	1	119260-07900	LIFTER	1							
4	1	26106-080142	BOLT, M8X 14 PLATED	1							
5	1	26106-060122	BOLT, M6X 12 PLATED	4							
6	1	719325-11700	HEAD ASSY, CYLINDER	1							
10	2	119260-11800	GUIDE, VALVE	4							1
12	2	27241-350000	PLUG, 35	2							
13	2	23876-020000	PLUG, R02	1							
14	2	27221-050080	PLUG, 5X 8	1							
15	2	119260-11100	VALVE, INTAKE	2							
16	2	119260-11110	VALVE, EXHAUST	2							
17	2	114250-11120	SPRING, VALVE	4							
18	2	114250-11180	RETAINER, SPRING	4							
19	2	27310-055001	COTTER, 5.5	4							
21	2	119260-11340	SEAL, VALVE STEM	4							
22	2	119260-11370	CAP, VALVE	4							
23	2	22351-060012	PIN, SPRING 6.0X12	2							
24	1	119600-11460	GASKET, NOZZLE	4							
25	1	119305-11200	SUPPORT ASSY, ARM	1							
26	2	719260-11650	ARM ASSY, ROCKER	2							
27	3	105010-11230	SCREW, VALVE ADJUST	2							
29	3	26856-060002	NUT, M6	2							
30	2	719260-11660	ARM ASSY, ROCKER	2							
31	3	105010-11230	SCREW, VALVE ADJUST	2							
33	3	26856-060002	NUT, M6	2							
34	2	119305-11240	SHAFT ASSY, ROCKER	1							
37	2	119260-11260	SUPPORT, ROCKER ARM	1							
38	2	119265-11260	SUPPORT, ROCKER ARM	1							
39	2	119260-11270	SCREW	1							
40	2	119260-11280	SPRING	1							
41	2	22242-000100	RING, 10	2							
42	1	119620-11350	STUD	2							
43	1	26306-080002	NUT, M8	2							
44	1	119309-11331	BONNET ASSY, HEAD	1							
46	2	119305-03020	PLATE, SHELTER	1							
47	2	119305-03031	GASKET	1							
49	2	124097-11311	GASKET, BONNET	1							
50	2	124097-11390	JOINT	1							
52	2	22857-500100	SCREW, 5X10	4							
53	2	119309-03150	JOINT	1							
54	1	119600-11450	PROTECTOR, NOZZLE	2							
55	1	124160-11360	KNOB	2							
56	1	24311-000120	O-RING, 1AP12.0	2							
57	1	129795-77800	PLUG, GLOW	2							
58	1	119305-77820	CONNECTOR, GLOW PLUG	1							
59	1	119632-07900	LIFTER	1							
60	1	119520-03090	PIPE ASSY	1							
61	2	119520-03990	CLIP, HOSE 10.5	2							
66	1	124160-01751	COVER, FILLER	1							
67	1	24311-000320	O-RING, 1AP32.0	1							

Remarks
(1) REPAIR PART.

N:Old ←Yes/No→ New. Q:Old ←No/Yes→ New. R:Old ←Yes/Yes→ New. S:Old ←No/No→ New. W:Add. Z:Discontinued. F:Interchangeable by set. K:Q'ty Change

Copyright (C) YANMAR CO., LTD. All RightsReserved.

Fig.5. SUCTION MANIFOLD

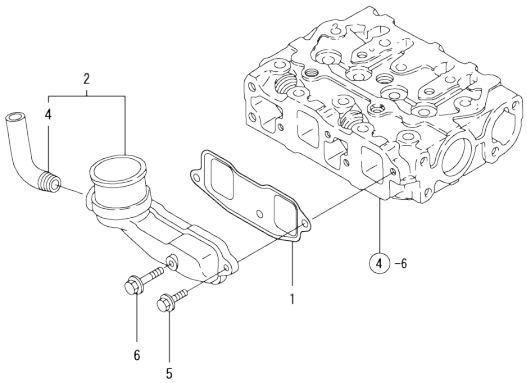

(A)=2TNE68-DM4
(B)=
(C)=
(D)=
(E)=
(F)=

No.	Lev.	Parts No.	Description	Q'ty (A)	(B)	(C)	(D)	(E)	(F)	I	R
1	1	119326-12111	GASKET, MANIFOLD	1							
2	1	119385-12730	MANIFOLD ASSY,INTAKE	1							
4	2	121500-12790	JOINT, PIPE PT1/4	1							
5	1	26106-060162	BOLT, M6X 16 PLATED	2							
6	1	26106-060282	BOLT, M6X 28 PLATED	1							

N:Old ◄Yes/No► New. Q:Old ◄No/Yes► New. R:Old ◄Yes/Yes► New. S:Old ◄No/No► New. W:Add. Z:Discontinued. F:Interchangeable by set. K:Q'ty Change

Copyright (C) YANMAR CO., LTD. All RightsReserved.

Fig.6. EXHAUST MANIFOLD

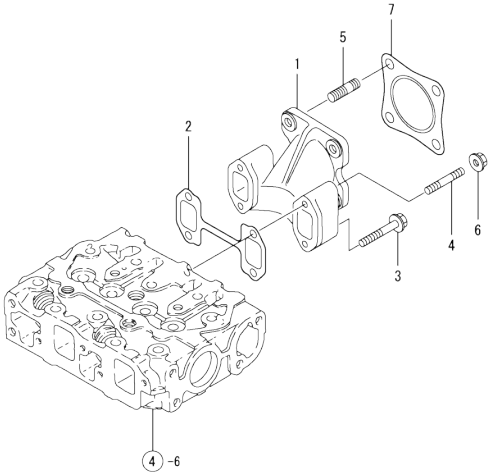

(A)=2TNE68-DM4
(B)=
(C)=
(D)=
(E)=
(F)=

No.	Lev.	Parts No.	Description	Q'ty (A)	(B)	(C)	(D)	(E)	(F)	I	R
1	1	119305-13100	MANIFOLD, EXHAUST	1							
2	1	119305-13110	GASKET	1							
3	1	119265-13840	BOLT, M6X40	2							
4	1	119265-13810	STUD, M6X40	2							
5	1	119131-18320	STUD, M8X22	4							
6	1	119265-13800	NUT, M6	2							
7	1	121000-13201	GASKET, SILENCER	1							

N:Old ←Yes/No→ New. Q:Old ←No/Yes→ New. R:Old ←Yes/Yes→ New. S:Old ←No/No→ New. W:Add. Z:Discontinued. F:Interchangeable by set. K:Q'ty Change

Copyright (C) YANMAR CO., LTD. All RightsReserved.

Fig.7. CAMSHAFT & DRIVING GEAR

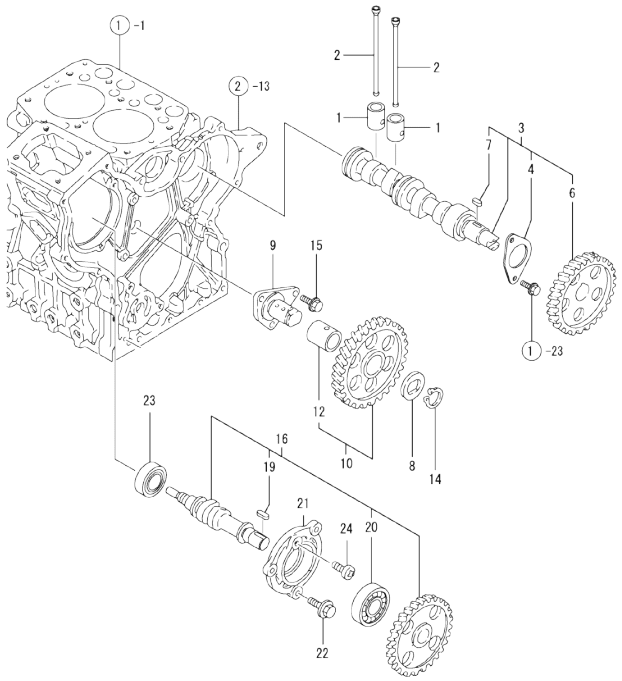

(A)=2TNE68-DM4
(B)=
(C)=
(D)=
(E)=
(F)=

No.	Lev.	Parts No.	Description	Q'ty (A)	(B)	(C)	(D)	(E)	(F)	I	R
1	1	119260-14200	TAPPET	4							
2	1	119260-14400	ROD, PUSH	4							
3	1	119305-14580	CAMSHAFT ASSY	1							
4	2	119620-02450	BEARING, THRUST	1							
6	2	119260-14100	GEAR, CAMSHAFT	1							
7	2	22512-040120	KEY, 4X 12	1							
8	1	119660-25022	RETAINER	1							
9	1	119660-25052	SHAFT, IDLE	1							
10	1	119260-25100	GEAR ASSY, IDLE	1							
12	2	119620-25912	BUSH	1							1
14	1	22242-000200	RING, 20	1							
15	1	26106-060122	BOLT, M6X 12 PLATED	3							
16	1	119305-14200	CAM ASSY	1							
19	2	22512-040120	KEY, 4X 12	1							
20	2	24102-063034	BEARING, BALL 6303U	1							
21	1	119660-01821	BEARING, FUEL CAM	1							
22	1	26106-060162	BOLT, M6X 16 PLATED	3							
23	1	24101-062034	BEARING, BALL 6203	1							
24	1	26587-080102	SCREW, M8X10	1							

Remarks
(1) REPAIR PART.

N:Old ◄Yes/No► New. Q:Old ◄No/Yes► New, R:Old ◄Yes/Yes► New, S:Old ◄No/No► New, W:Add, Z:Discontinued, F:Interchangeable by set, K:Q'ty Change

Copyright (C) YANMAR CO., LTD. All RightsReserved.

Fig.8. CRANKSHAFT & PISTON

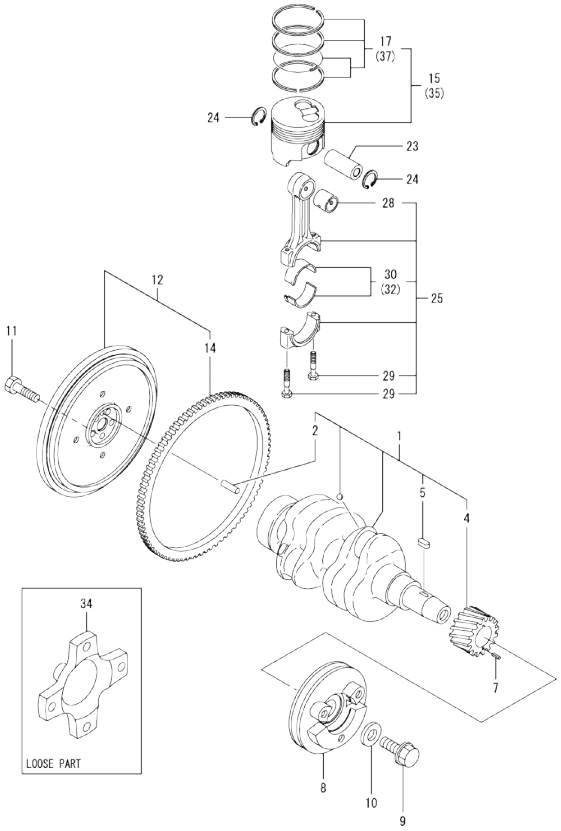

(A)=2TNE68-DM4
(B)=
(C)=
(D)=
(E)=
(F)=

No.	Lev.	Parts No.	Description	Q'ty (A)	(B)	(C)	(D)	(E)	(F)	I	R
1	1	119309-21700	CRANKSHAFT ASSY	1							
2	2	129100-01580	PIN, M8X16	1							
4	2	119260-21200	GEAR, CRANKSHAFT	1							
5	2	22512-040120	KEY, 4X 12	1							
7	1	22351-030010	PIN, SPRING 3.0X10	1							
8	1	119325-21670	V-PULLEY	1							
9	1	119621-21680	BOLT, FLANGE 12X1.25	1							
10	1	119620-21941	WASHER	1							
11	1	119620-21500	BOLT, FLYWHEEL	5							
12	1	119520-21591	FLYWHEEL ASSY	1							
14	2	119260-21600	GEAR, RING	1							
15	1	119265-22601	PISTON ASSY	2							
17	2	119265-22500	RING SET, PISTON	2							
23	1	119265-22300	PIN, PISTON	2							
24	1	22252-000200	RING, 20	4							
25	1	119265-23100	ROD ASSY, CONNECTING	2							
28	2	119260-23910	BEARING, PISTON PIN	2							1
29	2	119265-23200	BOLT, CONNECTING ROD	4							
30	2	719260-23600	BEARING, CRANK PIN	2							
32	1	719260-23610	BEARING ASSY, 0.25	2							2
34	1	119520-21930	SHAFT, STUB	1							
35	1	119265-22930	PISTON ASSY, 0.25 OS	2							3
37	2	119265-22950	RING SET, 0.25 OS	2							3

Remarks
(1) REPAIR PART.
(2) UNDER-SIZE(U.S=0.25)PART.
(3) OVER-SIZE(O.S=0.25)PART.

N:Old ←Yes/No→ New. Q:Old ←No/Yes→ New. R:Old ←Yes/Yes→ New. S:Old ←No/No→ New. W:Add. Z:Discontinued. F:Interchangeable by set. K:Q'ty Change

Copyright (C) YANMAR CO., LTD. All RightsReserved.

Fig.9. LUB.OIL SYSTEM

(A)=2TNE68-DM4
(B)=
(C)=
(D)=
(E)=
(F)=

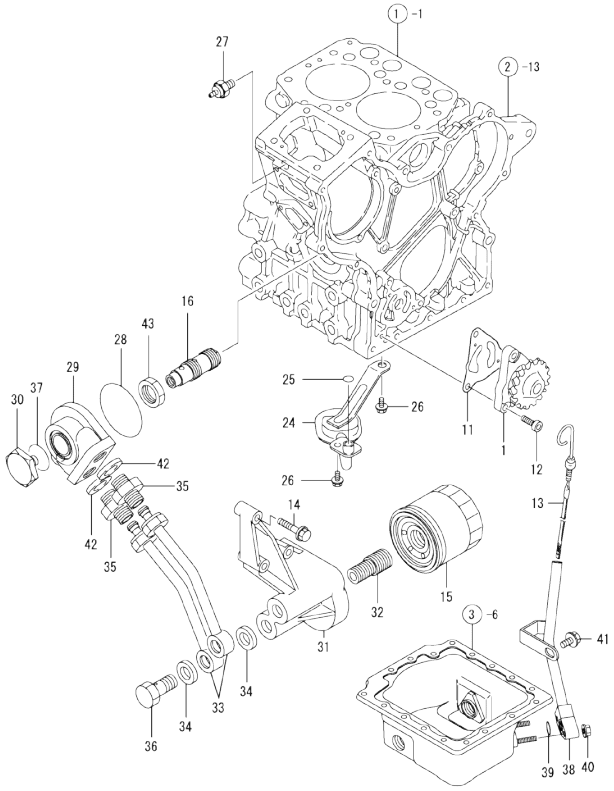

No.	Lev.	Parts No.	Description	Q'ty (A)	(B)	(C)	(D)	(E)	(F)	I	R
1	1	119260-32000	PUMP ASSY, OIL	1							
11	1	119660-32020	GASKET, PUMP	1							
12	1	26450-060202	BOLT, M6X 20	3							
13	1	119520-34811	DIPSTICK, OIL	1							
14	1	26106-060902	BOLT, M6X 90 PLATED	3							
15	1	119305-35151	FILTER ASSY, D68XL65	1							1
16	1	119520-35300	VALVE ASSY, CONTROL	1							
24	1	119385-35090	PIPE ASSY, OIL INLET	1							
25	1	119209-35030	O-RING, P11	1							
26	1	26106-060122	BOLT, M6X 12 PLATED	2							
27	1	121252-39450	SWITCH, 0.5KG	1							
28	1	119520-35420	O-RING	1							
29	1	119520-35432	BRACKET, FILTER	1							
30	1	119520-35441	JOINT	1							
31	1	119520-35453	BRACKET, FILTER	1							
32	1	119520-35480	BOLT, FILTER	1							
33	1	119520-39630	PIPE ASSY, OIL	2							
34	1	23414-140000	GASKET, 14X1.0	4							
35	1	23831-100000	UNION, 10	2							
36	1	23857-080000	BOLT, JOINT 8	2							
37	1	24351-020250	O-RING 1A S-26.0	1							
38	1	119520-34851	GUIDE, DIPSTICK	1							
39	1	24311-000150	O-RING, 1AP15.0	1							
40	1	26366-060002	NUT, M6	2							
41	1	26106-100122	BOLT, M10X 12 PLATED	1							
42	1	23414-160000	GASKET, 16X1.0	2							
43	1	129150-35350	NUT	1							

Remarks
(1) REPAIR PART.

N:Old ←Yes/No→ New. Q:Old ←No/Yes→ New. R:Old ←Yes/Yes→ New. S:Old ←No/No→ New. W:Add. Z:Discontinued. F:Interchangeable by set. K:Q'ty Change

Copyright (C) YANMAR CO., LTD. All RightsReserved.

Fig.10. COOLING WATER SYSTEM

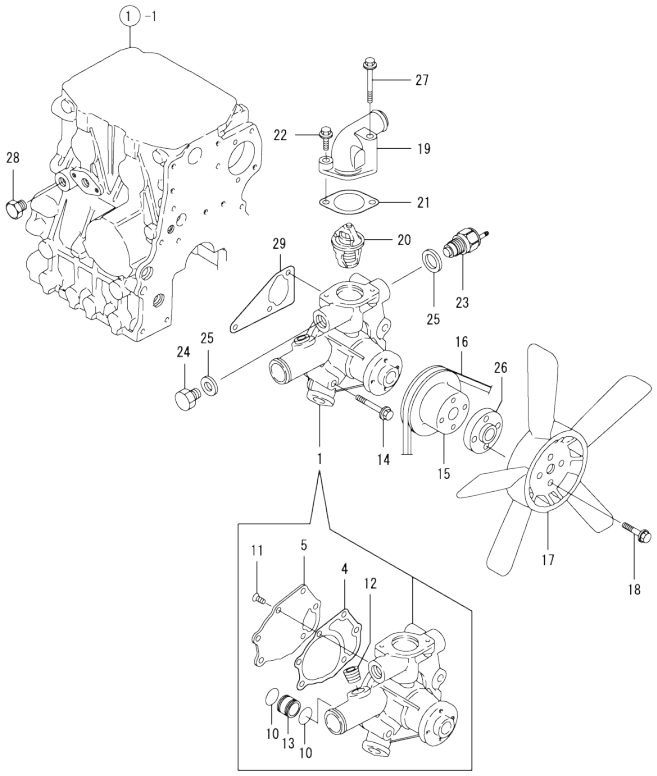

(A)=2TNE68-DM4 (D)=
(B)= (E)=
(C)= (F)=

No.	Lev.	Parts No.	Description	Q'ty (A)	(B)	(C)	(D)	(E)	(F)	I	R
1	1	119520-42000	PUMP ASSY, WATER	1							
4	2	119285-42051	GASKET, WATER PUMP	1							
5	2	119285-42120	PLATE	1							
10	2	119209-42320	O-RING, P21 EPDM	2							
11	2	26577-060122	SCREW, M6X12	3							
12	2	23871-030000	PLUG, R03	1							
13	2	119285-42270	NIPPLE	1							
14	1	26106-080452	BOLT, M8X 45 PLATED	3							
15	1	119620-42350	V-PULLEY	1							
16	1	129430-42290	V-BELT, FM32.5	1							
17	1	119332-44740	FAN, COOLING D260X5	1							
18	1	26106-060202	BOLT, M6X 20 PLATED	4							
19	1	124101-49531	COVER, THERMOSTAT	1							
20	1	119621-49801	THERMOSTAT, 82	1							
21	1	129795-49551	GASKET	1							
21-1	1	129350-49541	GASKET	1							R
	(A=*2009.10)										
22	1	26106-080282	BOLT, M8X 28 PLATED	1							
23	1	121250-44901	SWITCH, 110	1							
24	1	121450-42450	PLUG, M16	1							
25	1	124465-44950	GASKET, 16	2							
26	1	124574-44761	SPACER, FAN	1							
27	1	26106-080652	BOLT, M8X 65 PLATED	1							
28	1	171056-49120	PLUG, DRAIN	1							
29	1	119260-42021	GASKET, WATER PUMP	1							

N:Old ←Yes/No→ New. Q:Old ←No/Yes→ New. R:Old ←Yes/Yes→ New. S:Old ←No/No→ New. W:Add. Z:Discontinued. F:Interchangeable by set. K:Q'ty Change

Copyright (C) YANMAR CO., LTD. All RightsReserved.

Fig.11. FUEL INJECTION PUMP

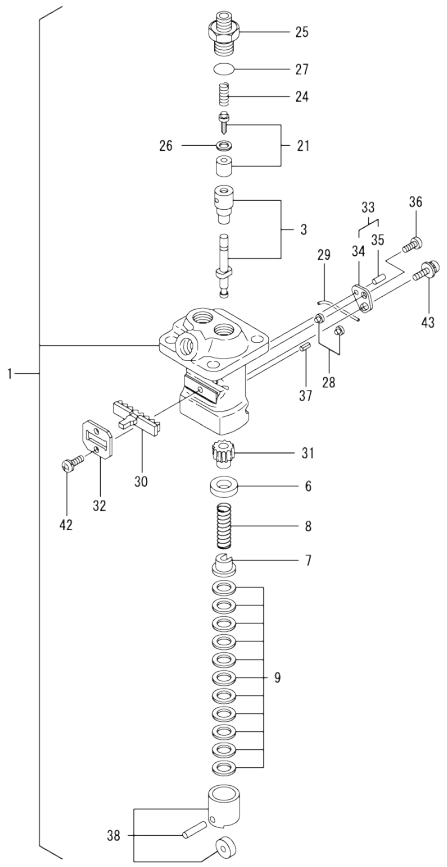

(A)=2TNE68-DM4 (D)=
(B)= (E)=
(C)= (F)=

No.	Lev.	Parts No.	Description	Q'ty (A)	(B)	(C)	(D)	(E)	(F)	I	R
1	1	719520-51100	PUMP ASSY, INJECTION	1							
3	2	119520-51100	PLUNGER ASSY	2							
6	2	119620-51170	RETAINER, SPRING A	2							
7	2	119620-51180	RETAINER, SPRING B	2							
8	2	119620-51190	SPRING, PLUNGER	2							
9	2	119620-51250	SHIM SET	2							
21	2	119225-51300	VALVE ASSY, DELIVERY	2							
24	2	105546-51330	SPRING, DELIVERY	2							
25	2	119620-51340	HOLDER, DELIVERY	2							
26	2	119620-51350	GASKET	2							
27	2	119620-51370	O-RING	2							
28	2	119620-51450	PIECE	2							
29	2	174307-51460	PIN, LOCK	1							
30	2	119305-51500	RACK, CONTROL	1							
31	2	119620-51510	PINION	2							
32	2	119305-51530	RETAINER, RACK	1							
33	2	119620-51640	PLATE ASSY, ADJUST	1							
34	3	119620-51650	PLATE	1							
35	3	119620-51670	PIN	1							
36	2	119620-51660	SCREW	1							
37	2	119620-51680	PIN	1							
38	2	119620-51700	TAPPET ASSY	2							
42	2	26022-040082	SCREW, M4X 8	2							
43	2	26033-040102	SCREW, M4X10	1							

N:Old ←Yes/No→ New. Q:Old ←No/Yes→ New. R:Old ←Yes/Yes→ New. S:Old ←No/No→ New. W:Add. Z:Discontinued. F:Interchangeable by set. K:Q'ty Change

Copyright (C) YANMAR CO., LTD. All RightsReserved.

Fig.12. GOVERNOR

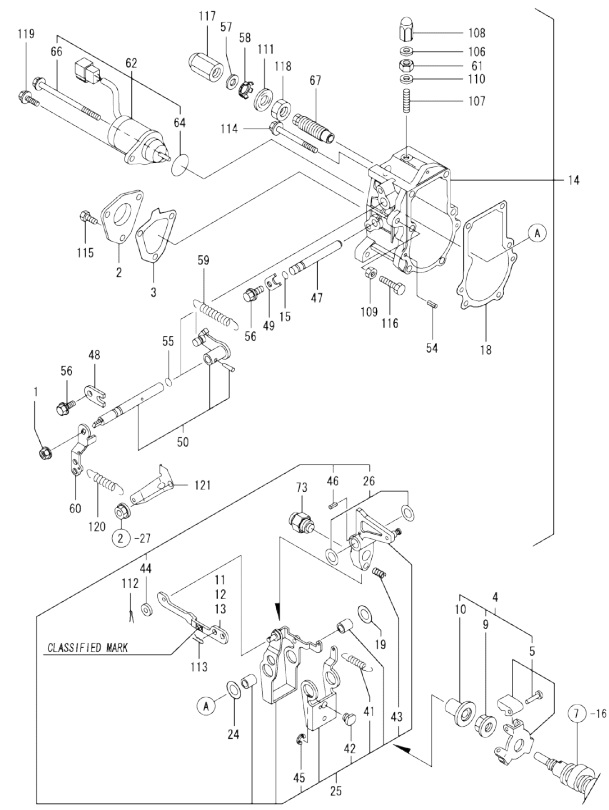

Remarks
(1) SELECTIVE PARTS: CERTAIN THE CLASSIFICATION MARK, THEN PLACE YOUR ORDER.(REFER TO ILLUSTRATION).

(A)=2TNE68-DM4
(B)=
(C)=
(D)=
(E)=
(F)=

No.	Lev.	Parts No.	Description	Q'ty (A)	(B)	(C)	(D)	(E)	(F)	I	R
1	1	194990-22050	NUT, M8	1							
2	1	119660-61060	COVER, GOVERNOR CASE	1							
3	1	119660-61071	GASKET	1							
4	1	119600-61100	DRIVE ASSY	1							
5	2	119600-61200	WEIGHT ASSY,GOVERNOR	1							
9	2	119660-61300	NUT	1							
10	2	119660-61341	SLEEVE	1							
11	1	119660-61122	LINK, NO MARK	1							1
12	1	119660-61141	LINK, MARK A	1							1
13	1	119660-61151	LINK, MARK :B	1							1
14	1	119632-61200	CASE ASSY, GOVERNOR	1							
15	2	129155-51280	O-RING, S6	1							
18	2	119660-61053	GASKET	1							
19	2	119632-61500	SHIM SET	1							
24	2	129156-61500	SHIM, T=0.5	1							
25	2	119232-61510	LEVER ASSY, GOVERNOR	1							
26	3	174307-51700	SHIM SET	2							
41	3	119232-61540	SPRING	1							
42	3	119600-61541	SHIFTER	1							
43	3	119660-61651	SPRING, STARTING	1							
44	3	22117-040000	WASHER, 4	1							
45	3	22272-000040	RING, E- 4	1							
46	3	22351-030014	PIN, SPRING 3.0X14	1							
47	2	119660-61590	SHAFT	1							
48	2	119600-61900	RETAINER, SHAFT	1							
49	2	119660-61901	RETAINER, SHAFT	1							
50	2	119285-66080	SHAFT ASSY	1							
54	2	22351-040010	PIN, SPRING 4.0X10	2							
55	2	24341-000070	O-RING, 1AS7.0	1							
56	2	26106-060102	BOLT, M6X 10 PLATED	2							
57	1	23414-120016	GASKET, 12X1.0	1							
58	1	129209-61970	PLATE	1							
59	1	119520-66010	SPRING, REGULATOR	1							
60	1	119621-66051	LEVER, REGULATOR	1							
61	1	26857-060002	NUT, M6	1							
62	1	119653-66500	STOPPER ASSY	1							
64	2	24341-000280	O-RING, 1AS28.0	1							
66	2	119620-01530	BOLT	1							
67	1	119600-66530	LIMITER ASSY, FUEL	1							
73	1	119940-61550	ANGLEICH ASSY	1							
106	1	119285-66620	GASKET	1							
107	1	121575-66800	SCREW	1							
108	1	119285-66600	NUT, CAP M6	1							
109	1	26756-060002	NUT, LOCK M6	1							
110	1	22190-060003	SEAL WASER 6	2							
111	1	22190-120002	WASHER, SEAL 12	2							
112	1	22360-040000	PIN, SNAP 4	1							
113	1	22360-060000	PIN, SNAP 6	1							
114	1	26106-060702	BOLT, M6X 70 PLATED	5							
115	1	26116-050102	BOLT, M5X 10 PLATED	3							
116	1	119266-61460	BOLT	1							

N:Old ◄Yes/No► New. Q:Old ◄No/Yes► New. R:Old ◄Yes/Yes► New. S:Old ◄No/No► New. W:Add. Z:Discontinued. F:Interchangeable by set. K:Q'ty Change

++ CONTINUE ++

Copyright (C) YANMAR CO., LTD. All RightsReserved.

Fig.12. GOVERNOR

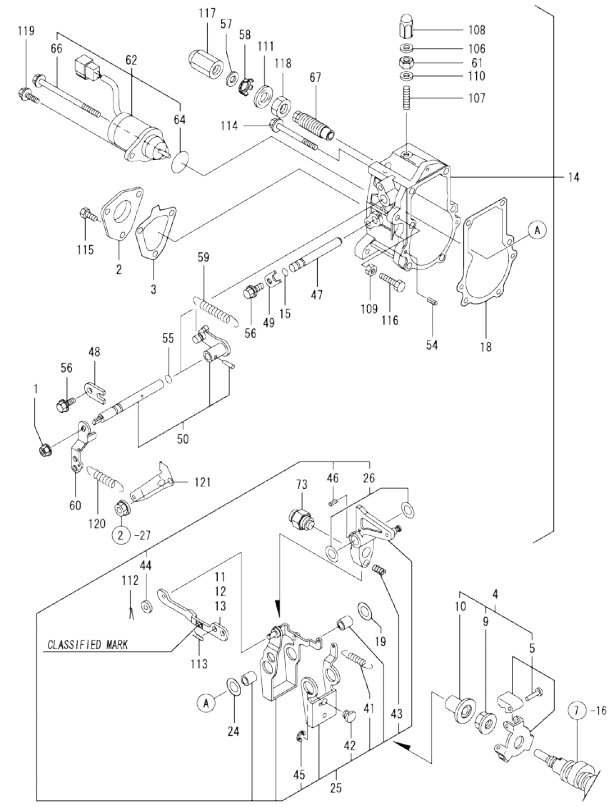

Remarks
(1) SELECTIVE PARTS: CERTAIN THE CLASSIFICATION MARK, THEN PLACE YOUR ORDER.(REFER TO ILLUSTRATION).

(A)=2TNE68-DM4 (D)=
(B)= (E)=
(C)= (F)=

No.	Lev.	Parts No.	Description	Q'ty (A)	(B)	(C)	(D)	(E)	(F)	I	R
117	1	26687-120002	NUT, CAP M12	1							
118	1	26736-120002	NUT, M12	1							
119	1	121465-59950	BOLT, M6X16	1							
120	1	119840-61870	SPRING	1							
121	1	119656-66910	HOOK	1							

N:Old ←Yes/No→ New. Q:Old ←No/Yes→ New. R:Old ←Yes/Yes→ New. S:Old ←No/No→ New. W:Add. Z:Discontinued. F:Interchangeable by set. K:Q'ty Change

Copyright (C) YANMAR CO., LTD. All RightsReserved.

Fig.13. FUEL INJECTION VALVE

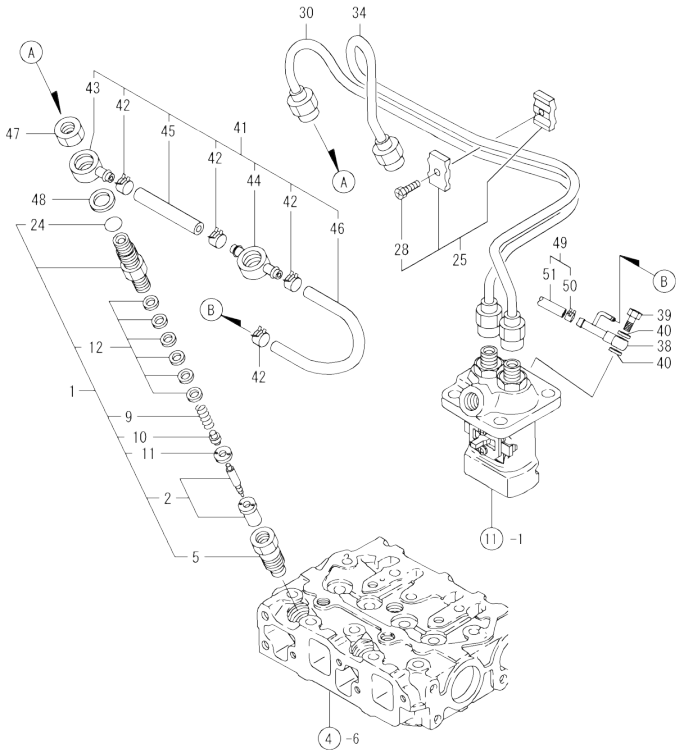

(A)=2TNE68-DM4
(B)=
(C)=
(D)=
(E)=
(F)=

No.	Lev.	Parts No.	Description	Q'ty (A)	(B)	(C)	(D)	(E)	(F)	I	R
1	1	719255-53100	VALVE ASSY,INJECTION	2							
2	2	119620-53000	VALVE ASSY,INJECTION	2							
5	2	119620-53080	NUT, NOZZLE	2							
9	2	119620-53120	SPRING, NOZZLE	2							
10	2	114250-53130	SEAT, SPRING	2							
11	2	119620-53140	SPACER, VALVE STOP	2							
12	2	114250-53400	SHIM SET	2							
24	2	129155-61830	O-RING, S10	2							
25	1	119305-59120	RETAINER, PIPE	1							
28	2	129150-59131	BOLT, M4X14	1							
30	1	119309-59810	PIPE ASSY, INJECTION	1							
34	1	119309-59820	PIPE ASSY, INJECTION	1							
38	1	119266-59570	JOINT, OVER FLOW	1							
39	1	119266-59580	BOLT, PIPE JOINT M8	1							
40	1	22190-080002	WASHER, SEAL 6	2							
41	1	119520-59540	PIPE ASSY, RETURN	1							
42	2	124066-59100	CLIP, HOSE 8	4							
43	2	119260-59520	JOINT	1							
44	2	119260-59530	JOINT	1							
45	2	105025-59550	PIPE, FUEL RETURN	1							
46	2	119000-59560	PIPE, FUEL RETURN	1							
47	1	119620-59700	NUT, NOZZLE	2							
48	1	22190-140002	WASHER, SEAL 14	2							
49	1	721250-59080	PIPE ASSY, FUEL	1							
50	2	124766-59050	CLIP, HOSE 12	2							
51	2	121250-59080	PIPE, FUEL D12X180	1							

N:Old ←Yes/No→ New. Q:Old ←No/Yes→ New. R:Old ←Yes/Yes→ New. S:Old ←No/No→ New. W:Add. Z:Discontinued. F:Interchangeable by set. K:Q'ty Change

Copyright (C) YANMAR CO., LTD. All RightsReserved.

Fig.14. FUEL LINE

(A)=2TNE68-DM4
(B)=
(C)=
(D)=
(E)=
(F)=

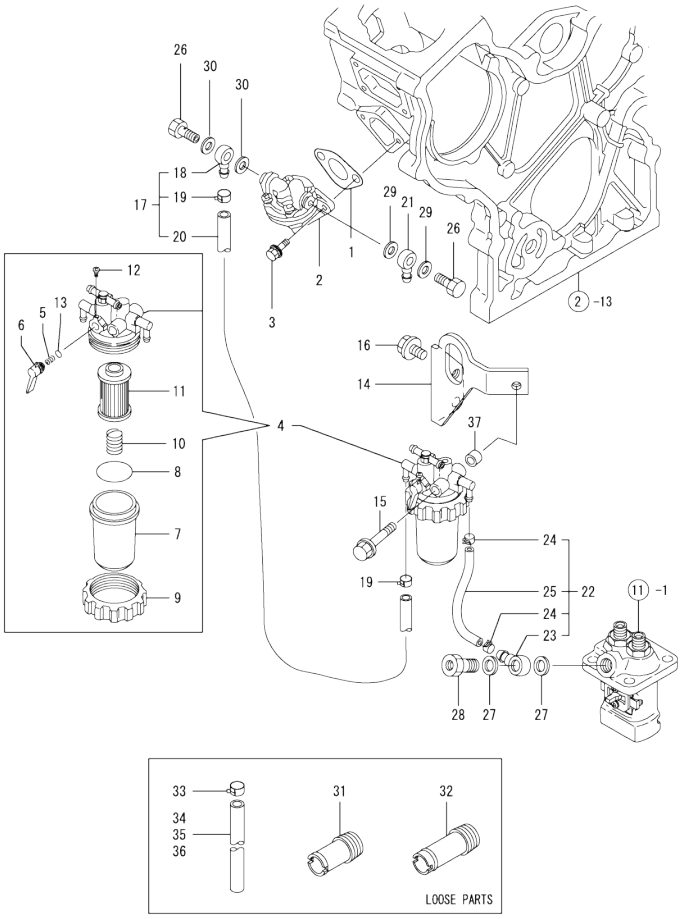

No.	Lev.	Parts No.	Description	Q'ty (A)	(B)	(C)	(D)	(E)	(F)	I	R
1	1	121520-01851	GASKET	1							
2	1	119600-52021	PUMP ASSY, FUEL FEED	1							
3	1	26106-060162	BOLT, M6X 16 PLATED	2							
4	1	119255-55620	FILTER ASSY, FUEL	1							
5	2	104200-55330	SPRING, VALVE	1							
6	2	119810-55340	LEVER	1							
7	2	121254-55510	COVER	1							
8	2	102103-55520	O-RING	1							
9	2	110250-55610	RING, RETAINING	1							
10	2	121250-55620	SPRING	1							
11	2	124550-55700	FILTER, FUEL L=90	1							
12	2	104200-55750	SCREW, M4	1							
13	2	24311-240100	O-RING, 1AP10A	1							
14	1	119325-55900	BRACKET, FILTER	1							
15	1	26014-080752	BOLT, M8X 75	1							
16	1	26106-080142	BOLT, M8X 14 PLATED	2							
17	1	119260-59020	PIPE ASSY, D12XL400	1							
18	2	104264-59030	JOINT, PIPE 8	1							
19	2	124766-59050	CLIP, HOSE 12	2							
20	2	121024-59090	PIPE, FUEL D12X450	1							
21	1	104264-59030	JOINT, PIPE 8	1							
22	1	119325-59030	PIPE ASSY, FUEL	1							
23	2	101304-59020	JOINT, PIPE 12	1							
24	2	124766-59050	CLIP, HOSE 12	2							
25	2	119325-59080	PIPE, FUEL	1							
26	1	105582-59150	BOLT, PIPE JOINT	2							
27	1	22190-120002	WASHER, SEAL 12	2							
28	1	103854-39140	BOLT, PIPE JOINT	1							
29	1	22190-080002	WASHER, SEAL 6	2							
30	1	22190-080002	WASHER, SEAL 6	2							
31	1	121851-11970	JOINT, PIPE	1							
32	1	129122-44480	JOINT	1							
33	1	124766-59050	CLIP, HOSE 12	6							
34	1	121750-59110	PIPE, FUEL D12X320	1							
35	1	105340-59510	PIPE, FUEL	1							
36	1	105990-59560	PIPE, FUEL	1							
37	1	119940-77270	SPACER, GENERATOR	1							

N:Old ←Yes/No→ New. Q:Old ←No/Yes→ New. R:Old ←Yes/Yes→ New. S:Old ←No/No→ New. W:Add. Z:Discontinued. F:Interchangeable by set. K:Q'ty Change

Copyright (C) YANMAR CO., LTD. All RightsReserved.

Fig.15. STARTING MOTOR

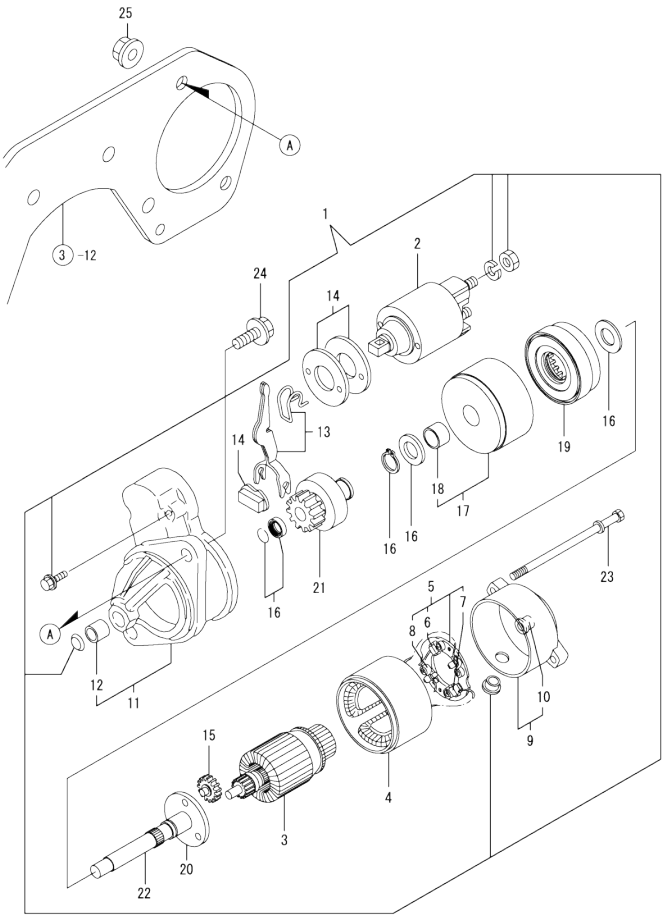

(A)=2TNE68-DM4 (D)=
(B)= (E)=
(C)= (F)=

No.	Lev.	Parts No.	Description	Q'ty (A)	(B)	(C)	(D)	(E)	(F)	I	R
1	1	119233-77010	STARTER ASSY	1							
2	2	129698-77020	MAGNETIC SWITCH ASSY	1							
3	2	129698-77101	ARMATURE ASSY	1							
4	2	129698-77110	COIL ASSY, FIELD	1							
5	2	129698-77120	HOLDER ASSY, BRUSH	1							
6	3	129698-77140	BRUSH(+) SET	1							
7	3	129698-77130	BRUSH (-)	2							
8	3	129698-77150	SPRING, BRUSH	4							
9	2	119698-77161	COVER	1							
10	3	129698-77170	BEARING	1							
11	2	119233-77520	CASE ASSY, GEAR	1							
12	3	X2114535200	METAL, STARTER	1							
13	2	129698-77270	LEVER SET, SHIFT	1							
14	2	129698-77280	COVER KIT	1							
15	2	129698-77240	GEAR	3							
16	2	129698-77250	WASHER SET	1							
17	2	129698-77180	BRACKET	1							
18	3	129698-77190	BRACKET	1							
19	2	129698-77200	GEAR, INTERNAL	1							
20	2	129698-77210	BRACKET	1							
21	2	119233-77660	PINION ASSY	1							
22	2	129698-77230	SHAFT(PINION	1							
23	2	124195-77770	THROUGH BOLT	2							
24	1	26106-100252	BOLT, M10X 25 PLATED	2							
25	1	26306-100002	NUT, M10	2							

N:Old ←Yes/No→ New. Q:Old ←No/Yes→ New. R:Old ←Yes/Yes→ New. S:Old ←No/No→ New. W:Add. Z:Discontinued. F:Interchangeable by set. K:Q'ty Change

Copyright (C) YANMAR CO., LTD. All RightsReserved.

Fig.16. GENERATOR

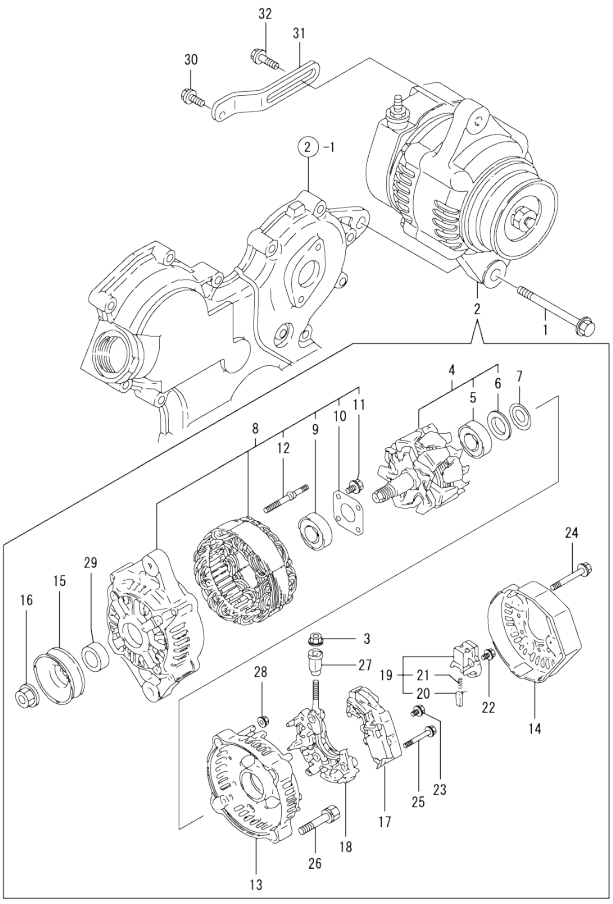

(A)=2TNE68-DM4
(B)=
(C)=
(D)=
(E)=
(F)=

No.	Lev.	Parts No.	Description	Q'ty (A)	(B)	(C)	(D)	(E)	(F)	I	R
1	1	26106-100552	BOLT, M10X 55 PLATED	1							
2	1	119620-77201	GENERATOR, 40A	1							
3	2	X9490561001	NUT	1							
4	2	119620-77380	ROTOR ASSY	1							
5	3	119620-79240	BALL BEARING	1							
6	3	119620-79250	COVER, BEARING	1							
7	2	119620-79360	WASHER, THRUST	1							
8	2	119620-77421	FRAME ASSY, DRIVE	1							
9	3	119620-79200	BALL BEARING	1							
10	3	119620-79210	PLATE	1							
11	3	119620-79220	SCREW	4							
12	3	119620-79230	BOLT, STUD	2							
13	2	119620-77440	FLAME ASSY, REAR	1							
14	2	119620-77450	COVER	1							
15	2	119620-77461	PULLEY	1							
16	2	119620-77471	NUT	1							
17	2	119620-77710	REGULATOR ASSY	1							
18	2	119620-79260	HOLDER	1							
19	2	119620-79270	HOLDER, BRUSH	1							
20	3	119620-77480	BRUSH ASSY	2							
21	3	119620-79280	SPRING	2							
22	2	119620-79290	SCREW	6							
23	2	119620-79300	SCREW	1							
24	2	119620-79310	BOLT	3							
25	2	119620-79320	SCREW W/WASHER	2							
26	2	119620-79330	BOLT	2							
27	2	119620-79340	INSULATION BUSH	1							
28	2	119620-79350	NUT	2							
29	2	119620-77490	COLLAR	1							
30	1	26106-080162	BOLT, M8X 16 PLATED	1							
31	1	119660-77330	ADJUSTER	1							
32	1	26014-080252	BOLT, M8X 25	1							

N:Old ←Yes/No→ New. Q:Old ←No/Yes→ New. R:Old ←Yes/Yes→ New. S:Old ←No/No→ New. W:Add. Z:Discontinued. F:Interchangeable by set. K:Q'ty Change

Copyright (C) YANMAR CO., LTD. All RightsReserved.

Fig.17. GASKET SET

(A)=2TNE68-DM4
(B)=
(C)=
(D)=
(E)=
(F)=

No.	Lev.	Parts No.	Description	Q'ty (A)	(B)	(C)	(D)	(E)	(F)	I	R
1	1	719309-92660	GASKET SET	1							1
2	2	119309-01330	GASKET, CYL. HEAD	1							
3	2	119305-01950	SHIM SET, ADJUSTING	1							
4	2	119660-01562	GASKET	1							
5	2	24311-000320	O-RING, 1AP32.0	2							
6	2	121520-01851	GASKET	1							
7	2	119305-03031	GASKET	1							
8	2	124097-11311	GASKET, BONNET	1							
9	2	119260-11340	SEAL, VALVE STEM	4							
10	2	119600-11450	PROTECTOR, NOZZLE	2							
11	2	119600-11460	GASKET, NOZZLE	4							
12	2	124465-44950	GASKET, 16	2							
13	2	119520-35420	O-RING	1							
14	2	22190-080002	WASHER, SEAL 6	6							
15	2	119624-32040	O-RING, P12.0	2							
16	2	22190-140002	WASHER, SEAL 14	2							
17	2	23414-140000	GASKET, 14X1.0	4							
18	2	119326-12111	GASKET, MANIFOLD	1							
19	2	121000-13201	GASKET, SILENCER	1							
20	2	119305-13110	GASKET	1							
21	2	119260-42021	GASKET, WATER PUMP	1							
22	2	129795-49551	GASKET	1							
23	2	24311-000120	O-RING, 1AP12.0	2							
24	2	24341-000240	O-RING, 1AS24.0	1							
25	2	22190-220002	WASHER, SEAL 22	2							
26	2	119660-61071	GASKET	1							
27	2	119660-32020	GASKET, PUMP	1							
28	2	24311-000150	O-RING, 1AP15.0	1							
29	2	119209-35030	O-RING, P11	1							
30	2	24351-020250	O-RING 1A S-26.0	1							
31	2	23414-160000	GASKET, 16X1.0	2							
32	1	119332-92751	WRENCH, FILTER 68	1							
33	1	171051-92760	WRENCH, STRAINER	1							
34	1	129400-92400	FLEX HORN	1							1
35	1	977770-01212	GASKET, LIQUID	1							1

Remarks
(1) OPTIONAL PART.

N:Old ←Yes/No→ New. Q:Old ←No/Yes→ New. R:Old ←Yes/Yes→ New. S:Old ←No/No→ New. W:Add. Z:Discontinued. F:Interchangeable by set. K:Q'ty Change

Copyright (C) YANMAR CO., LTD. All RightsReserved.

Parts No. Index

Parts No.	Fig. No.	Ref. No.
101304-59020	14	23
102103-55520	14	8
103854-39140	14	28
104200-55330	14	5
104200-55750	14	12
104264-59030	14	18
		21
105010-11230	4	27
		31
105025-59550	13	45
105340-59510	14	35
105546-51330	11	24
105582-59150	14	26
105990-59560	14	36
110250-55610	14	9
114250-11120	4	17
114250-11180	4	18
114250-53130	13	10
114250-53400	13	12
119000-59560	13	46
119131-18320	6	5
119209-35030	9	25
	17	29
119209-42320	10	10
119225-51300	11	21
119232-61510	12	25
119232-61540	12	41
119233-77010	15	1
119233-77520	15	11
119233-77660	15	21
119255-55620	14	4
119260-01510	2	15
119260-01590	2	1
119260-02020	1	6
119260-02800	1	16
119260-02930	1	19
119260-07900	4	3
119260-11100	4	15
119260-11110	4	16
119260-11260	4	37
119260-11270	4	39
119260-11280	4	40
119260-11340	4	21
	17	9
119260-11370	4	22
119260-11800	4	10
119260-14100	7	6
119260-14200	7	1
119260-14400	7	2
119260-21200	8	4

Parts No.	Fig. No.	Ref. No.
119260-21600	8	14
119260-23910	8	28
119260-25100	7	10
119260-32000	9	1
119260-42021	10	29
	17	21
119260-59020	14	17
119260-59520	13	43
119260-59530	13	44
119265-01250	1	12
119265-11260	4	38
119265-13800	6	6
119265-13810	6	4
119265-13840	6	3
119265-22300	8	23
119265-22500	8	17
119265-22601	8	15
119265-22930	8	35
119265-22950	8	37
119265-23100	8	25
119265-23200	8	29
119266-01200	1	24
119266-02410	1	22
119266-59570	13	38
119266-59580	13	39
119266-61460	12	116
119285-03140	4	1
119285-42051	10	4
119285-42120	10	5
119285-42270	10	13
119285-66080	12	50
119285-66600	12	108
119285-66620	12	106
119305-01490	2	13
119305-01950	2	21
	17	3
119305-03020	4	46
119305-03031	4	47
	17	7
119305-11200	4	25
119305-11240	4	34
119305-13100	6	1
119305-13110	6	2
	17	20
119305-14200	7	16
119305-14580	7	3
119305-35151	9	15
119305-51500	11	30
119305-51530	11	32
119305-59120	13	25

Parts No.	Fig. No.	Ref. No.
119305-77820	4	58
119309-01330	1	25
	17	2
119309-01550	2	18
119309-01810	1	26
119309-03150	4	53
119309-11331	4	44
119309-21700	8	1
119309-59810	13	30
119309-59820	13	34
119325-21670	8	8
119325-55900	14	14
119325-59030	14	22
119325-59080	14	25
119326-12111	5	1
	17	18
119332-44740	10	17
119332-92751	17	32
119385-12730	5	2
119385-35090	9	24
119520-01611	3	12
119520-01771	3	6
119520-01772	3	6 -1
119520-03090	4	60
119520-03990	4	61
119520-21591	8	12
119520-21930	8	34
119520-34811	9	13
119520-34851	9	38
119520-35300	9	16
119520-35420	9	28
	17	13
119520-35432	9	29
119520-35441	9	30
119520-35453	9	31
119520-35480	9	32
119520-39630	9	33
119520-42000	10	1
119520-51100	11	3
119520-59540	13	41
119520-66010	12	59
119600-11450	4	54
	17	10
119600-11460	4	24
	17	11
119600-52021	14	2
119600-61100	12	4
119600-61200	12	5
119600-61541	12	42
119600-61900	12	48

Parts No.	Fig. No.	Ref. No.
119600-66530	12	67
119620-01530	12	66
119620-01620	3	1
119620-01800	2	3
119620-02450	7	4
119620-11350	4	42
119620-21500	8	11
119620-21941	8	10
119620-25912	7	12
119620-42350	10	15
119620-51170	11	6
119620-51180	11	7
119620-51190	11	8
119620-51250	11	9
119620-51340	11	25
119620-51350	11	26
119620-51370	11	27
119620-51450	11	28
119620-51510	11	31
119620-51640	11	33
119620-51650	11	34
119620-51660	11	36
119620-51670	11	35
119620-51680	11	37
119620-51700	11	38
119620-53000	13	2
119620-53080	13	5
119620-53120	13	9
119620-53140	13	11
119620-59700	13	47
119620-77201	16	2
119620-77380	16	4
119620-77421	16	8
119620-77440	16	13
119620-77450	16	14
119620-77461	16	15
119620-77471	16	16
119620-77480	16	20
119620-77490	16	29
119620-77710	16	17
119620-79200	16	9
119620-79210	16	10
119620-79220	16	11
119620-79230	16	12
119620-79240	16	5
119620-79250	16	6
119620-79260	16	18
119620-79270	16	19
119620-79280	16	21
119620-79290	16	22

Parts No. Index

Parts No.	Fig. No.	Ref. No.
119620-79300	16	23
119620-79310	16	24
119620-79320	16	25
119620-79330	16	26
119620-79340	16	27
119620-79350	16	28
119620-79360	16	7
119621-21680	8	9
119621-49801	10	20
119621-66051	12	60
119624-32040	2	5
	17	15
119632-07900	4	59
119632-61200	12	14
119632-61500	12	19
119640-01640	3	7
119653-66500	12	62
119656-66910	12	121
119660-01562	2	19
	17	4
119660-01570	2	20
119660-01821	7	21
119660-01911	2	4
119660-25022	7	8
119660-25052	7	9
119660-32020	9	11
	17	27
119660-61053	12	18
119660-61060	12	2
119660-61071	12	3
	17	26
119660-61122	12	11
119660-61141	12	12
119660-61151	12	13
119660-61300	12	9
119660-61341	12	10
119660-61590	12	47
119660-61651	12	43
119660-61901	12	49
119660-77330	16	31
119698-77161	15	9
119810-55340	14	6
119840-61870	12	120
119940-61550	12	73
119940-77270	14	37
121000-13201	6	7
	17	19
121023-01550	2	28
121024-59090	14	20
121250-44901	10	23

Parts No.	Fig. No.	Ref. No.
121250-55620	14	10
121250-59080	13	51
121252-39450	9	27
121254-55510	14	7
121450-01560	2	16
121450-42450	10	24
121465-59950	12	119
121500-12790	5	4
121520-01851	14	1
	17	6
121575-66800	12	107
121750-59110	14	34
121851-11970	14	31
124060-01050	1	5
124066-59100	13	42
124085-02220	3	4
124097-11311	4	49
	17	8
124097-11390	4	50
124101-49531	10	19
124160-01751	2	11
	4	66
124160-11360	4	55
124195-77770	15	23
124465-44950	10	25
	17	12
124550-55700	14	11
124574-44761	10	26
124766-59050	13	50
	14	19
		24
		33
129100-01580	3	11
	8	2
129122-44480	14	32
129150-35350	9	43
129150-59131	13	28
129155-51280	12	15
129155-61830	13	24
129156-61500	12	24
129209-61970	12	58
129350-49541	10	21 -1
129400-92400	17	34
129430-42290	10	16
129698-77020	15	2
129698-77101	15	3
129698-77110	15	4
129698-77120	15	5
129698-77130	15	7
129698-77140	15	6

Parts No.	Fig. No.	Ref. No.
129698-77150	15	8
129698-77170	15	10
129698-77180	15	17
129698-77190	15	18
129698-77200	15	19
129698-77210	15	20
129698-77230	15	22
129698-77240	15	15
129698-77250	15	16
129698-77270	15	13
129698-77280	15	14
129795-49551	10	21
	17	22
129795-77800	4	57
171008-03990	4	2
171051-92760	17	33
171056-49120	10	28
174307-51460	11	29
174307-51700	12	26
194990-22050	2	26
	12	1
22117-040000	12	44
22190-060003	12	110
22190-080002	13	40
	14	29
		30
	17	14
22190-120002	12	111
	14	27
22190-140002	13	48
	17	16
22190-220002	3	9
	17	25
22242-000100	4	41
22242-000200	7	14
22252-000200	8	24
22272-000040	12	45
22351-030010	8	7
22351-030014	12	46
22351-040010	2	17
	12	54
22351-060012	4	23
22360-040000	12	112
22360-060000	12	113
22512-040120	7	7
		19
	8	5
22857-500100	4	52
23414-120016	12	57
23414-140000	9	34

Parts No.	Fig. No.	Ref. No.
23414-140000	17	17
23414-160000	9	42
	17	31
23831-100000	9	35
23857-080000	9	36
23871-030000	10	12
23876-020000	4	13
24101-062034	7	23
24102-063034	7	20
24311-000120	4	56
	17	23
24311-000150	9	39
	17	28
24311-000320	2	12
	4	67
	17	5
24311-240100	14	13
24341-000070	12	55
24341-000240	2	29
	17	24
24341-000280	12	64
24351-020250	9	37
	17	30
26014-080252	16	32
26014-080752	14	15
26022-040082	11	42
26033-040102	11	43
26106-060102	3	10
	12	56
26106-060122	1	23
	4	5
	7	15
	9	26
26106-060162	2	6
		30
	5	5
	7	22
	14	3
26106-060202	10	18
26106-060222	3	5
26106-060282	5	6
26106-060302	2	7
26106-060402	2	8
26106-060502	2	9
26106-060652	2	10
26106-060702	12	114
26106-060902	9	14
26106-080142	4	4
	14	16
26106-080162	16	30

Parts No. Index

Parts No.	Fig. No.	Ref. No.
26106-080282	10	22
26106-080452	10	14
26106-080652	10	27
26106-100122	9	41
26106-100252	15	24
26106-100552	16	1
26116-050102	12	115
26206-100202	3	13
26306-080002	4	43
26306-100002	15	25
26366-060002	2	27
	9	40
26450-060202	9	12
26577-060122	10	11
26587-080102	7	24
26687-120002	12	117
26736-120002	12	118
26756-060002	12	109
26856-060002	4	29
		33
26857-060002	12	61
27221-050080	4	14
27221-060100	1	11
27241-100000	1	13
27241-250000	1	14
27241-300000	1	15
27241-350000	4	12
27310-055001	4	19
719255-53100	13	1
719260-02870	1	27
719260-11650	4	26
719260-11660	4	30
719260-23600	8	30
719260-23610	8	32
719309-92660	17	1
719325-01560	1	1
719325-11700	4	6
719520-51100	11	1
719620-01650	3	2
721250-59080	13	49
977770-01212	2	31
	3	14
	17	35
X2114535200	15	12
X9490561001	16	3

Parts No.	Fig. No.	Ref. No.

Parts No.	Fig. No.	Ref. No.

Parts No.	Fig. No.	Ref. No.