YANMAR

PARTS CATALOG

0CD10-M69300EN

Last update Aug., 2015

PREFACE

1. This parts catalog is the first edition of 2TNE68-YB SHINKO ENGINEERING CO., LTD.

Pub. No.: 000Y00D6830
Published: Aug.,1999

2. Model name

Engine model	Equipped Operating Machine		Manufacturer
	Products	Model name	
2TNE68-YB	EXCAVATOR	Z 66 SK009SR	SHINKO ENGINEERING CO., LTD.

Directions for the Parts Catalog.

1.This Parts Catalog shows both standard and optional parts.
2.Parts may change without prior notice.
3.The following is an example of the Parts Catalog format.

0CF10-G21601 29. FUEL INJECTION PUMP(W/BOOST)

(A)=4JH-DT
(B)=4JH-DTZ
(C)=4JH-DTZP
(D)=4JH-DTZA
(E)=4JH-DTZY
(F)=

① REF.	② LEV.	PARTS NO.	DESCRIPTION	Q'TY (A)	(B)	(C)	(D)	(E)	(F)	③ I	⑤ R
1	1	729595-51390	FUEL INJECTION PUMP	1	1	1	1	1			1
1-1	1	729595-51391	FUEL INJECTION PUMP	1	1	1	1	1		N	1
	(A=E00185)	(B=E00200)									
3	2	26022-060162	SCREW M 6X 16	9	9	9	9	9			
3-1 ④	2	26022-060162	SCREW M 6X 16	4	4	4	4	4		K	
	(A=E00156)	(B=E00156)	(C=E00156) (D=E00156)	(E=E00156)							
4	2	129470-51040	CAMSHAFT	1	1	1	1	1			
5	2	122710-51050	BEARING, ROLLER	2	2	2	2	2			
6	2	129470-51060	RETAINER	1	1	1	1	1			

Remarks
(1) BOOST COMPEMSATOR TYPE. OPTIONAL PART, TO E00155,(4JH-DT, 4JH-DTZ

①Ref. No.

The Ref. No. listed may not be in accordance with the illustration Ref. No.

(Ex.) Illustration No. 1 List Ref No. 1 (Before change) → 1- 1 (After change)

For interchangeable symbols N, R and K, illustrations for new parts may be abbreviated.

②Lev. (Level)

Level indication
The numbers below indicate the level of relativity towards the main part.
1 ----- Main parts (Assembly parts)
2 ----- Sub component included in " 1 ".
3 ----- Sub component included in " 2 ".
Note) Parts that are not for sale are partially illustrated but not listed.

③Interchangeability Symbol

When a part change takes place, one of the following interchangeability symbols is indicated beside the part.

Symbol	Interchangeability	Contents note
N	Old ← Yes / No → New	New Part is interchangeable for Old Part but Old Part is not interchangeable for New Part.
Q	Old ← No / Yes → New	New Part is not interchangeable for Old Part but Old Part is interchangeable for New Part.
R	Old ← Yes / Yes → New	New/ Old Parts are both interchangeable.
S	Old ← No / No → New	New/ Old Parts are both not interchangeable.
W		Part newly added.
Z		Part discontinued.
F		Not interchangeable by a single part but interchangeable together with related parts.
K		Changes only for used parts quantities.

④Effective Machine No.

When a part changes, the effective Machine No. will be indicated in the (A)-(F) column.

Product Symbol	Product No.	Product Symbol	Product No.
C	Clutch No. Compressor No.	F	Machine No. (Agricultural Equip.)
D	Drive No.	M	Machine No.
E	Engine No.		

Note 1) A date may follow the symbol. (Ex.) 1996.01
Note 2) " XXXXX " and " ZZZZZ " are for parts that could not be predicted or for engine models that could not be identified.
Note 3) (A=E00185) is the E (Engine Serial Number) for the column (A) model (in this case 4JH-DT) after the parts design change.

⑤Remarks

Figures or alphabets (symbols) are entered in the remarks column.
The comments (remarks) on parts that are indicated at the bottom of the illustration are the same symbols as those stated above.

Contents

0CD10-M69300

Fig. No.	Fig. Name	Fig. No.	Fig. Name
2TNE68-YB			
1.	CYLINDER BLOCK		
2.	GEAR HOUSING		
3.	FLYWHEEL HOUSING & OIL SUMP		
4.	CYLINDER HEAD & BONNET		
5.	SUCTION & EXHAUST MANIFOLD		
6.	CAMSHAFT & DRIVING GEAR		
7.	CRANKSHAFT & PISTON		
8.	LUB.OIL SYSTEM		
9.	COOLING WATER SYSTEM		
10.	FUEL INJECTION PUMP		
11.	GOVERNOR		
12.	FUEL INJECTION VALVE		
13.	STARTING MOTOR		
14.	GENERATOR		
15.	GASKET SET		

Fig.1. CYLINDER BLOCK

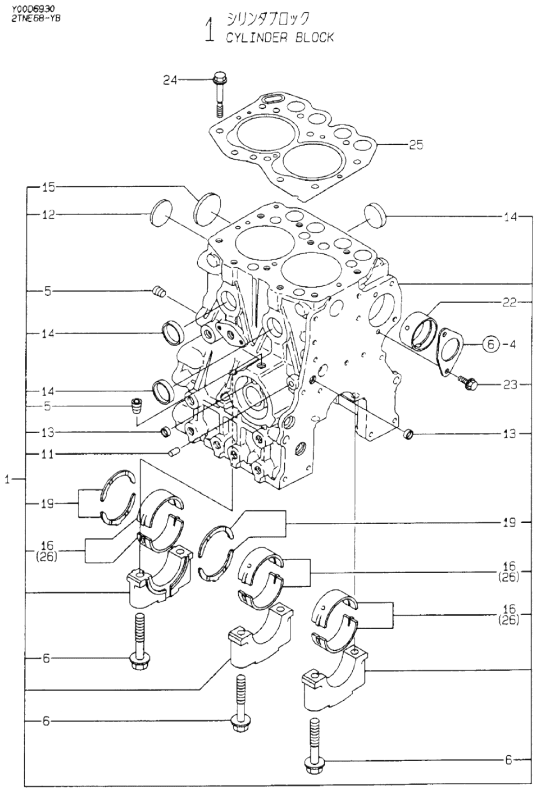

(A)=2TNE68-YB (D)=
(B)= (E)=
(C)= (F)=

No.	Lev.	Parts No.	Description	Q'ty (A)	(B)	(C)	(D)	(E)	(F)	I	R
1	1	719325-01560	BLOCK ASSY, CYLINDER	1							
5	2	124060-01050	PLUG, PT1/8	2							
6	2	119260-02020	BOLT, METAL CAP	6							
11	2	27221-060100	PLUG, 6X10	1							
12	2	27231-400000	PLUG 40	1							
13	2	27241-100000	PLUG, 10	2							
14	2	27241-250000	PLUG, 25	3							
15	2	27241-300000	PLUG 30	1							
16	2	119260-02800	BEARING, MAIN	3							
19	2	119260-02930	BEARING, THRUST	2							
22	2	119266-02410	BUSH	1							
23	2	26106-060122	BOLT, M6X 12 PLATED	2							
24	1	119266-01200	BOLT, HEAD	10							
25	1	119309-01330	GASKET, CYL. HEAD	1							
26	1	719260-02870	BEARING, 0.25 US	3							1

Remarks
(1) UNDER-SIZE(U.S=0.25)PART.

N:Old ←Yes/No→ New. Q:Old ←No/Yes→ New. R:Old ←Yes/Yes→ New. S:Old ←No/No→ New. W:Add. Z:Discontinued. F:Interchangeable by set. K:Q'ty Change

Copyright (C) YANMAR CO., LTD. All RightsReserved.

Fig.2. GEAR HOUSING

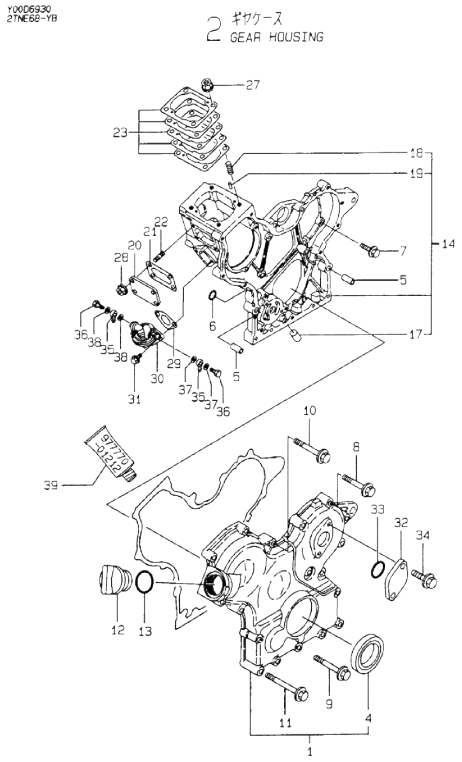

(A)=2TNE68-YB
(B)=
(C)=
(D)=
(E)=
(F)=

No.	Lev.	Parts No.	Description	Q'ty (A)	(B)	(C)	(D)	(E)	(F)	I	R
1	1	119260-01590	COVER ASSY,GEAR CASE	1							
4	2	119620-01800	SEAL, OIL	1							
5	1	119660-01911	PIPE, KNOCK	4							
6	1	119624-32040	O-RING, P12.0	2							
7	1	26106-060162	BOLT, M6X 16 PLATED	5							
8	1	26106-060302	BOLT, M6X 30 PLATED	5							
9	1	26106-060402	BOLT, M6X 40 PLATED	3							
10	1	26106-060502	BOLT, M6X 50 PLATED	4							
11	1	26106-060652	BOLT, M6X 65 PLATED	6							
12	1	124160-01751	COVER, FILLER	1							
13	1	24311-000320	O-RING, 1AP32.0	1							
14	1	119305-01490	CASE ASSY, GEAR	1							
17	2	119260-01510	PLUG	1							
18	2	121450-01560	STUD, M8X22	4							
19	2	22351-040010	PIN, SPRING 4.0X10	2							
20	1	119660-01551	COVER	1							
21	1	119660-01562	GASKET	1							
22	1	119660-01570	STUD, M6X12	4							
23	1	119305-01950	SHIM SET, ADJUSTING	1							
27	1	194990-22050	NUT, M8	4							
28	1	26366-060002	NUT, M6	4							
29	1	121520-01851	GASKET	1							
30	1	119600-52021	PUMP ASSY, FUEL FEED	1							
31	1	26106-060162	BOLT, M6X 16 PLATED	2							
32	1	121023-01550	COVER	1							
33	1	24341-000240	O-RING, 1AS24.0	1							
34	1	26106-060162	BOLT, M6X 16 PLATED	2							
35	1	104264-59030	JOINT, PIPE 8	2							
36	1	105582-59150	BOLT, PIPE JOINT	2							
37	1	22190-080002	WASHER, SEAL 6	2							
38	1	22190-080002	WASHER, SEAL 6	2							
39	1	977770-01212	GASKET, LIQUID	1							1

Remarks
(1) OPTIONAL PART.

N:Old $\frac{\text{Yes}}{\text{No}}$ New. Q:Old $\frac{\text{No}}{\text{Yes}}$ New. R:Old $\frac{\text{Yes}}{\text{Yes}}$ New. S:Old $\frac{\text{No}}{\text{No}}$ New. W:Add. Z:Discontinued. F:Interchangeable by set. K:Q'ty Change

Copyright (C) YANMAR CO., LTD. All RightsReserved.

Fig.3. FLYWHEEL HOUSING & OIL SUMP

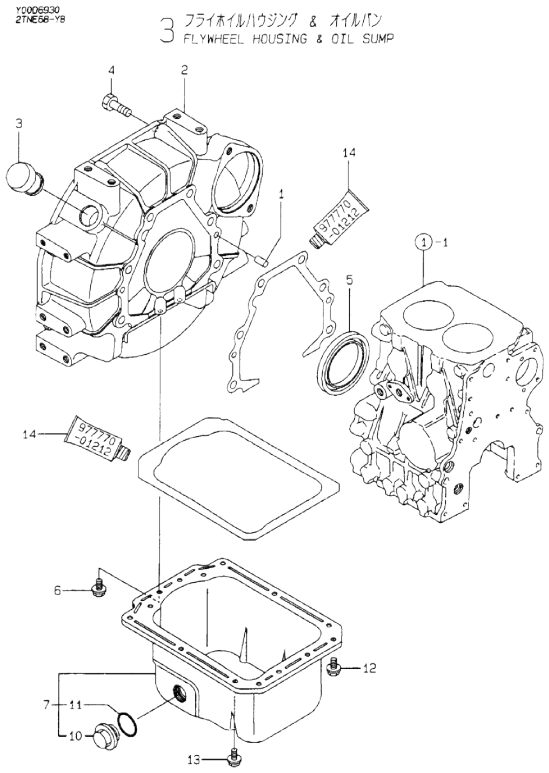

(A)=2TNE68-YB (D)=
(B)= (E)=
(C)= (F)=

No.	Lev.	Parts No.	Description	Q'ty (A)	(B)	(C)	(D)	(E)	(F)	I	R
1	1	129100-01580	PIN, M8X16	2							
2	1	119275-01600	HOUSING, FLYWHEEL	1							
3	1	119620-01750	CAP	1							
4	1	26206-100252	BOLT, M10X 25 PLATED	6							
5	1	124085-02220	SEAL, OIL	1							
6	1	26106-060102	BOLT, M6X 10 PLATED	2							
7	1	119326-01770	SUMP ASSY, OIL	1							
10	2	119640-01640	PLUG, DRAIN M22	1							
11	2	24341-000250	O-RING, 1AS25.0	1							
11-1	2	22190-220002	WASHER, SEAL 22	1						S	
	(A=FROM 1ST)										
12	1	26106-060122	BOLT, M6X 12 PLATED	4							
13	1	26106-060102	BOLT, M6X 10 PLATED	8							
14	1	977770-01212	GASKET, LIQUID	1							1

Remarks
(1) OPTIONAL PART.

N:Old ←Yes/No→ New. Q:Old ←No/Yes→ New. R:Old ←Yes/Yes→ New. S:Old ←No/No→ New. W:Add. Z:Discontinued. F:Interchangeable by set. K:Q'ty Change

Copyright (C) YANMAR CO., LTD. All RightsReserved.

Fig.4. CYLINDER HEAD & BONNET

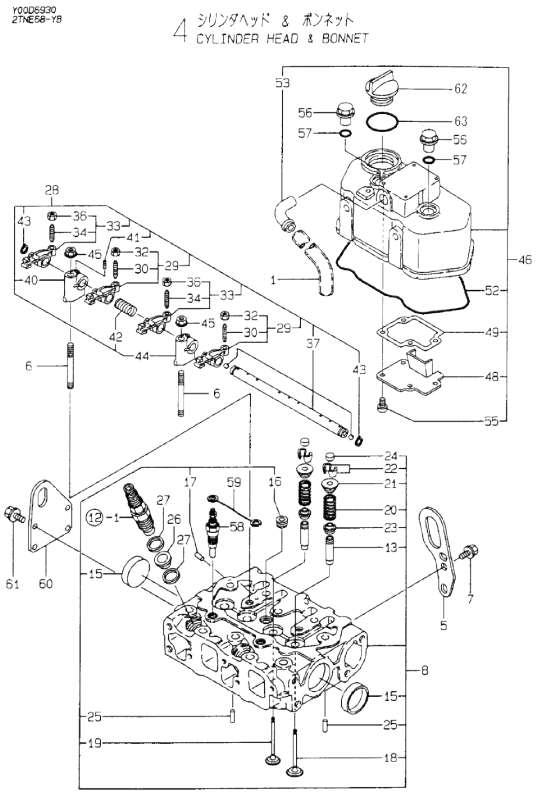

(A)=2TNE68-YB
(B)=
(C)=
(D)=
(E)=
(F)=

No.	Lev.	Parts No.	Description	Q'ty (A)	(B)	(C)	(D)	(E)	(F)	I	R
1	1	23065-120650	PIPE, 12X 650	1							
5	1	119260-07900	LIFTER	1							
6	1	119620-11350	STUD	2							
7	1	26106-080142	BOLT, M8X 14 PLATED	1							
8	1	719325-11700	HEAD ASSY, CYLINDER	1							
13	2	119260-11800	GUIDE, VALVE	4							1
15	2	27241-350000	PLUG, 35	2							
16	2	23876-020000	PLUG, R02	1							
17	2	27221-050080	PLUG, 5X 8	1							
18	2	119260-11100	VALVE, INTAKE	2							
19	2	119260-11110	VALVE, EXHAUST	2							
20	2	114250-11120	SPRING, VALVE	4							
21	2	114250-11180	RETAINER, SPRING	4							
22	2	27310-055001	COTTER, 5.5	4							
23	2	119260-11340	SEAL, VALVE STEM	4							
24	2	119260-11370	CAP, VALVE	4							
25	2	22351-060012	PIN, SPRING 6.0X12	2							
26	1	119600-11450	PROTECTOR, NOZZLE	2							
27	1	119600-11460	GASKET, NOZZLE	4							
28	1	119325-11200	SUPPORT ASSY, ARM	1							
29	2	719489-11650	ARM ASSY, ROCKER	2							
30	3	105010-11230	SCREW, VALVE ADJUST	2							
32	3	26756-060002	NUT, LOCK M6	2							
33	2	719489-11660	ARM ASSY, ROCKER	2							
34	3	105010-11230	SCREW, VALVE ADJUST	2							
36	3	26756-060002	NUT, LOCK M6	2							
37	2	119305-11240	SHAFT ASSY, ROCKER	1							
40	2	119260-11260	SUPPORT, ROCKER ARM	1							
41	2	119260-11270	SCREW	1							
42	2	119260-11280	SPRING	1							
43	2	22242-000100	RING, 10	2							
44	2	119265-11260	SUPPORT, ROCKER ARM	1							
45	1	26366-080002	NUT, M8	2							
46	1	119325-11350	BONNET ASSY, HEAD	1							
48	2	119305-03020	PLATE, SHELTER	1							
49	2	119305-03031	GASKET	1							
52	2	119305-11310	GASKET, BONNET	1							
53	2	119266-11390	JOINT	1							
55	2	22857-500100	SCREW, 5X10	4							
56	1	124160-11360	KNOB	2							
57	1	24311-000120	O-RING, 1AP12.0	2							
58	1	129795-77800	PLUG, GLOW	2							
59	1	119305-77820	CONNECTOR, GLOW PLUG	1							
60	1	119632-07900	LIFTER	1							
61	1	26106-060122	BOLT, M6X 12 PLATED	4							
62	1	124160-01751	COVER, FILLER	1							
63	1	24311-000320	O-RING, 1AP32.0	1							

Remarks
(1) REPAIR PART.

N:Old ←Yes/No→ New. Q:Old ←No/Yes→ New. R:Old ←Yes/Yes→ New. S:Old ←No/No→ New. W:Add. Z:Discontinued. F:Interchangeable by set. K:Q'ty Change

Copyright (C) YANMAR CO., LTD. All RightsReserved.

Fig.5. SUCTION & EXHAUST MANIFOLD

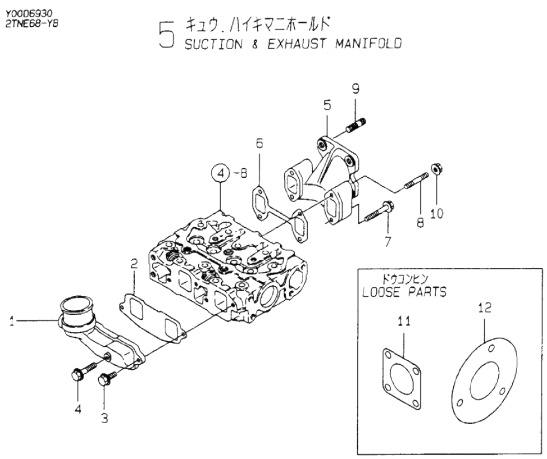

(A)=2TNE68-YB (D)=
(B)= (E)=
(C)= (F)=

No.	Lev.	Parts No.	Description	Q'ty (A)	(B)	(C)	(D)	(E)	(F)	I	R
1	1	119305-12150	MANIFOLD, AIR INTAKE	1							
2	1	119326-12111	GASKET, MANIFOLD	1							
3	1	26106-060162	BOLT, M6X 16 PLATED	2							
4	1	26106-060282	BOLT, M6X 28 PLATED	1							
5	1	119305-13100	MANIFOLD, EXHAUST	1							
6	1	119305-13110	GASKET	1							
7	1	26106-060402	BOLT, M6X 40 PLATED	2							
8	1	26216-060402	STUD, M6X 40	2							
9	1	119131-18320	STUD, M8X22	4							
10	1	26366-060002	NUT, M6	2							
11	1	124701-11911	GASKET, SILENCER	1							
12	1	103954-13201	GASKET, SILENCER	1							

N:Old ←Yes/No→ New. Q:Old ←No/Yes→ New. R:Old ←Yes/Yes→ New. S:Old ←No/No→ New. W:Add. Z:Discontinued. F:Interchangeable by set. K:Q'ty Change

Copyright (C) YANMAR CO., LTD. All RightsReserved.

Fig.6. CAMSHAFT & DRIVING GEAR

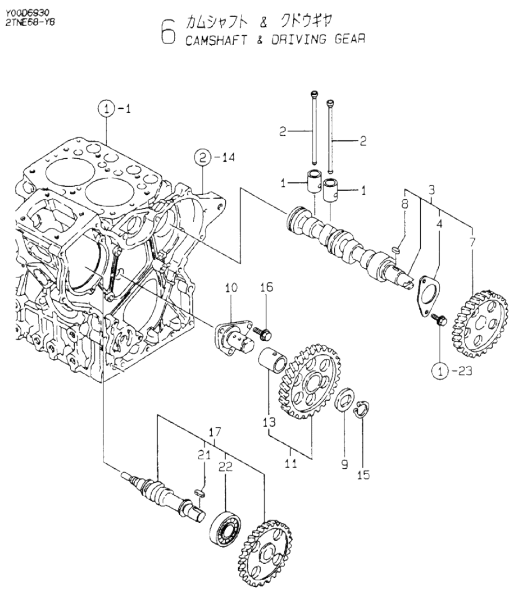

(A)=2TNE68-YB (D)=
(B)= (E)=
(C)= (F)=

No.	Lev.	Parts No.	Description	Q'ty (A)	(B)	(C)	(D)	(E)	(F)	I	R
1	1	119260-14200	TAPPET	4							
2	1	119260-14400	ROD, PUSH	4							
3	1	119305-14580	CAMSHAFT ASSY	1							
4	2	119620-02450	BEARING, THRUST	1							
7	2	119260-14100	GEAR, CAMSHAFT	1							
8	2	22512-040120	KEY, 4X 12	1							
9	1	119660-25022	RETAINER	1							
10	1	119660-25052	SHAFT, IDLE	1							
11	1	119260-25100	GEAR ASSY, IDLE	1							
13	2	119620-25912	BUSH	1							1
15	1	22242-000200	RING, 20	1							
16	1	26106-060122	BOLT, M6X 12 PLATED	3							
17	1	119305-14200	CAM ASSY	1							
21	2	22512-040120	KEY, 4X 12	1							
22	2	24102-063034	BEARING, BALL 6303U	1							

Remarks
(1) REPAIR PART.

N:Old ←Yes/No→ New. Q:Old ←No/Yes→ New. R:Old ←Yes/Yes→ New. S:Old ←No/No→ New. W:Add. Z:Discontinued. F:Interchangeable by set. K:Q'ty Change

Copyright (C) YANMAR CO., LTD. All RightsReserved.

Fig.7. CRANKSHAFT & PISTON

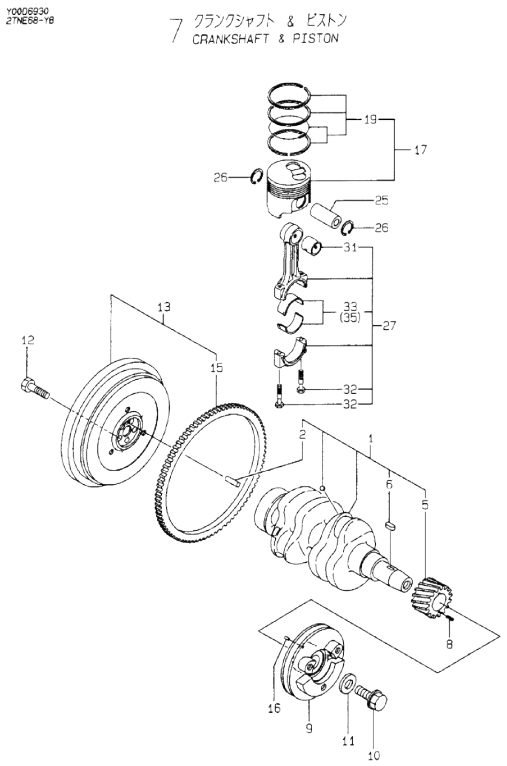

(A)=2TNE68-YB
(B)=
(C)=
(D)=
(E)=
(F)=

No.	Lev.	Parts No.	Description	Q'ty (A)	(B)	(C)	(D)	(E)	(F)	I	R
1	1	119309-21700	CRANKSHAFT ASSY	1							
2	2	129100-01580	PIN, M8X16	1							
5	2	119260-21200	GEAR, CRANKSHAFT	1							
6	2	22512-040120	KEY, 4X 12	1							
8	1	22351-030012	PIN, SPRING 3.0X12	1							
9	1	119325-21650	V-PULLEY	1							
10	1	119621-21680	BOLT, FLANGE 12X1.25	1							
11	1	119620-21941	WASHER	1							
12	1	119620-21500	BOLT, FLYWHEEL	5							
13	1	119326-21590	FLYWHEEL ASSY	1							
15	2	124950-21600	GEAR, RING	1							
16	1	22351-030010	PIN, SPRING 3.0X10	1							
17	1	119265-22601	PISTON ASSY	2							
19	2	119265-22500	RING SET, PISTON	2							
25	1	119265-22300	PIN, PISTON	2							
26	1	22252-000200	RING, 20	4							
27	1	119265-23100	ROD ASSY, CONNECTING	2							
31	2	119260-23910	BEARING, PISTON PIN	2							1
32	2	119265-23200	BOLT, CONNECTING ROD	4							
33	2	719260-23600	BEARING, CRANK PIN	2							
35	1	719260-23610	BEARING ASSY, 0.25	2							2

Remarks
(1) REPAIR PART.
(2) UNDER-SIZE(U.S=0.25)PART.

N:Old ←Yes/No→ New. Q:Old ←No/Yes→ New, R:Old ←Yes/Yes→ New. S:Old ←No/No→ New. W:Add. Z:Discontinued. F:Interchangeable by set. K:Q'ty Change

Copyright (C) YANMAR CO., LTD. All RightsReserved.

Fig.8. LUB.OIL SYSTEM

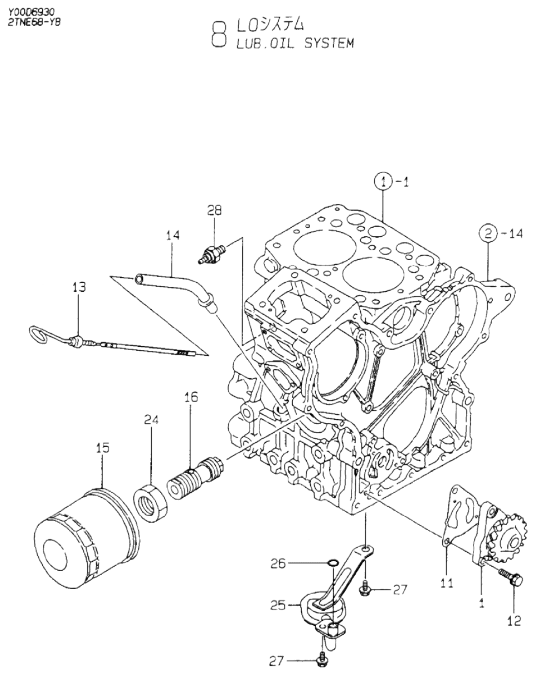

(A)=2TNE68-YB (D)=
(B)= (E)=
(C)= (F)=

No.	Lev.	Parts No.	Description	Q'ty (A)	(B)	(C)	(D)	(E)	(F)	I	R
1	1	119260-32000	PUMP ASSY, OIL	1							
11	1	119660-32020	GASKET, PUMP	1							
12	1	26450-060202	BOLT, M6X 20	3							
13	1	119326-34800	DIPSTICK, OIL	1							
13-1	1	119325-34810	DIPSTICK, OIL	1						N	
	(A=E11963)										
14	1	119325-34890	GUIDE, DIPSTICK	1							
15	1	119305-35150	FILTER, OIL	1							
16	1	119225-35300	VALVE ASSY	1							
24	1	129150-35350	NUT	1							
25	1	119326-35080	PIPE ASSY, OIL INLET	1							
26	1	119209-35030	O-RING, P11	1							
27	1	26106-060122	BOLT, M6X 12 PLATED	2							
28	1	124160-39450	SWITCH, 0.5KG	1							

N:Old ←Yes/No→ New. Q:Old ←No/Yes→ New. R:Old ←Yes/Yes→ New. S:Old ←No/No→ New. W:Add. Z:Discontinued. F:Interchangeable by set. K:Q'ty Change

Copyright (C) YANMAR CO., LTD. All RightsReserved.

Fig.9. COOLING WATER SYSTEM

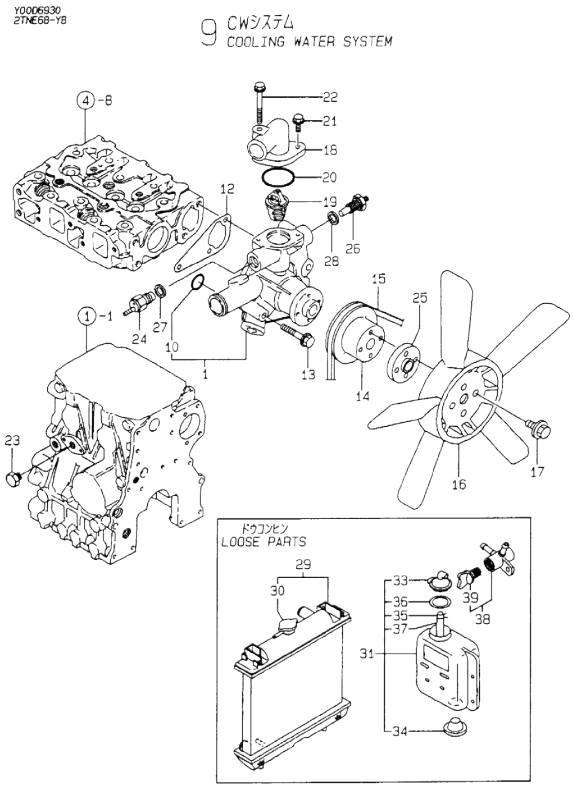

(A)=2TNE68-YB
(B)=
(C)=
(D)=
(E)=
(F)=

No.	Lev.	Parts No.	Description	Q'ty (A)	(B)	(C)	(D)	(E)	(F)	I	R
1	1	119260-42002	PUMP ASSY, WATER	1							
10	2	119225-42320	O-RING	1							
12	1	119260-42020	GASKET, WATER PUMP	1							
13	1	26106-080452	BOLT, M8X 45 PLATED	3							
14	1	119256-42360	V-PULLEY	1							
15	1	119225-42290	V-BELT, FM34.0	1							
15-1	1	119620-42291	V-BELT, FM34.5	1						N	
	(A=E11963)										
16	1	119332-44740	FAN, COOLING D260X5	1							
17	1	26106-060162	BOLT, M6X 16 PLATED	4							
18	1	119256-49530	COVER, THERMOSTAT	1							
19	1	119260-49800	THERMOSTAT, 71	1							
20	1	24321-000350	O-RING, 1AG35.0	1							
21	1	26106-060162	BOLT, M6X 16 PLATED	1							
22	1	26106-060552	BOLT, M6X 55 PLATED	1							
23	1	171056-49120	PLUG, DRAIN	1							
24	1	121250-44901	SWITCH, 110	1							
25	1	124574-44761	SPACER, FAN	1							
26	1	124250-49351	SENSOR	1							
26-1	1	121450-42450	PLUG, M16	1						N	
	(A=E11963)										
27	1	124465-44950	GASKET, 16	1							
27-1	1	124465-44950	GASKET, 16	2						K	
	(A=E11963)										
28	1	129150-49360	GASKET	1						Z	
	(A=E11963)										
29	1	119325-44510	RADIATOR ASSY	1							
30	2	119259-44570	CAP, RADIATOR	1							
31	1	121468-44510	TANK ASSY	1							
33	2	121450-44531	CAP	1							
34	2	121468-44540	PLUG	1							
35	2	124450-44560	RETAINER	1							
36	2	121470-44581	GASKET	1							
37	2	23065-070130	PIPE, 7X 130	1							
38	1	129550-49101	COCK ASSY, 2-WAY	1							
39	2	129150-49081	COCK, DRAIN	1							

N:Old ◄Yes/No► New. Q:Old ◄No/Yes► New. R:Old ◄Yes/Yes► New. S:Old ◄No/No► New. W:Add. Z:Discontinued. F:Interchangeable by set. K:Q'ty Change

Copyright (C) YANMAR CO., LTD. All RightsReserved.

Fig.10. FUEL INJECTION PUMP

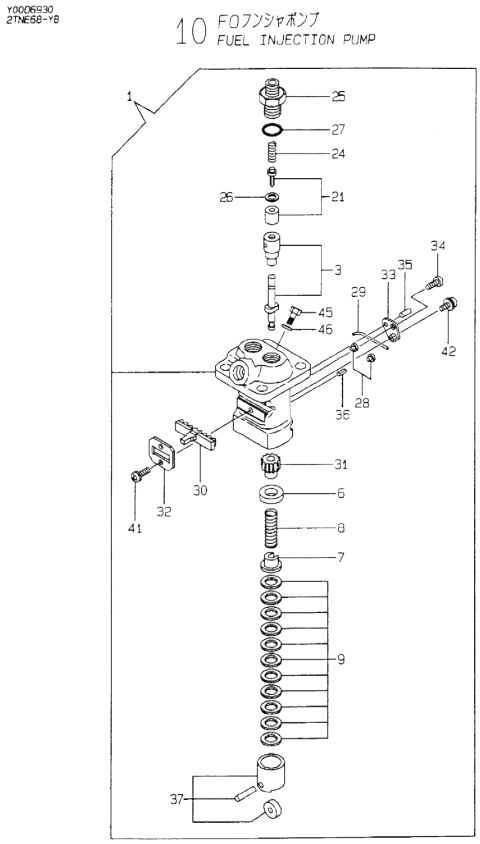

(A)=2TNE68-YB (D)=
(B)= (E)=
(C)= (F)=

No.	Lev.	Parts No.	Description	Q'ty (A)	(B)	(C)	(D)	(E)	(F)	I	R
1	1	719305-51100	PUMP ASSY, INJECTION	1							
3	2	119225-51100	PLUNGER ASSY	2							
6	2	119620-51170	RETAINER, SPRING A	2							
7	2	119620-51180	RETAINER, SPRING B	2							
8	2	119620-51190	SPRING, PLUNGER	2							
9	2	119620-51250	SHIM SET	2							
21	2	119225-51300	VALVE ASSY, DELIVERY	2							
24	2	105546-51330	SPRING, DELIVERY	2							
25	2	119620-51340	HOLDER, DELIVERY	2							
26	2	119620-51350	GASKET	2							
27	2	119620-51370	O-RING	2							
28	2	119620-51450	PIECE	2							
29	2	174307-51460	PIN, LOCK	1							
30	2	119305-51500	RACK, CONTROL	1							
31	2	119620-51510	PINION	2							
32	2	119305-51530	RETAINER, RACK	1							
33	2	119620-51650	PLATE	1							
34	2	119620-51660	SCREW	1							
35	2	119620-51670	PIN	1							
36	2	119620-51680	PIN	1							
37	2	119620-51700	TAPPET ASSY	2							
41	2	26022-040082	SCREW, M4X 8	2							
42	2	26033-040102	SCREW, M4X10	1							
45	2	119266-51900	BOLT	1						Z	
	(A=E*****)										
46	2	23414-080012	GASKET, 8X1.0	1						Z	
	(A=E*****)										

N:Old ←Yes/No→ New. Q:Old ←No/Yes→ New. R:Old ←Yes/Yes→ New. S:Old ←No/No→ New. W:Add. Z:Discontinued. F:Interchangeable by set. K:Q'ty Change

Copyright (C) YANMAR CO., LTD. All RightsReserved.

Fig.11. GOVERNOR

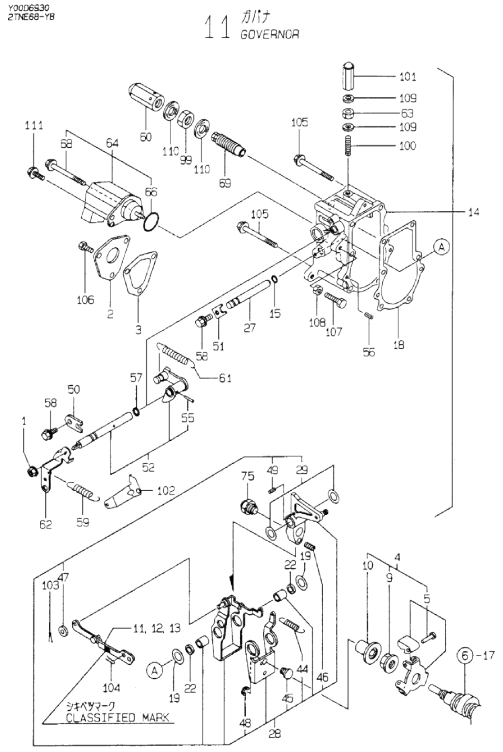

Remarks
(1) SELECTIVE PARTS: CERTAIN THE CLASSIFICATION MARK, THEN PLACE YOUR ORDER.(REFER TO ILLUSTRATION).

(A)=2TNE68-YB (D)=
(B)= (E)=
(C)= (F)=

No.	Lev.	Parts No.	Description	Q'ty (A)	(B)	(C)	(D)	(E)	(F)	I	R
1	1	194990-22050	NUT, M8	1							
2	1	119660-61060	COVER, GOVERNOR CASE	1							
3	1	119660-61071	GASKET	1							
4	1	119600-61100	DRIVE ASSY	1							
5	2	119600-61200	WEIGHT ASSY,GOVERNOR	1							
9	2	119660-61300	NUT	1							
10	2	119660-61341	SLEEVE	1							
11	1	119285-61120	LINK, NO MARK	1							1
12	1	119285-61130	LINK, MARK :2	1							1
13	1	119285-61140	LINK, MARK :3	1							1
14	1	119632-61200	CASE ASSY, GOVERNOR	1							
15	2	129155-51280	O-RING, S6	1							
18	2	119660-61052	GASKET	1							
19	2	119660-61460	SHIM SET	1							
22	2	129155-61480	SPACER ASSY	2							
27	2	119660-61491	SHAFT	1							
28	2	119232-61510	LEVER ASSY, GOVERNOR	1							
29	3	174307-51700	SHIM SET	2							
44	3	119232-61540	SPRING	1							
45	3	119600-61541	SHIFTER	1							
46	3	119660-61651	SPRING, STARTING	1							
47	3	22117-040000	WASHER, 4	1							
48	3	22272-000040	RING, E- 4	1							
49	3	22351-030014	PIN, SPRING 3.0X14	1							
50	2	119600-61900	RETAINER, SHAFT	1							
51	2	119660-61901	RETAINER, SHAFT	1							
52	2	119285-66080	SHAFT ASSY	1							
55	3	22322-030160	PIN, TAPER 3X16	1							
56	2	22351-040010	PIN, SPRING 4.0X10	2							
57	2	24341-000070	O-RING, 1AS7.0	1							
58	2	26106-060102	BOLT, M6X 10 PLATED	2							
59	1	119840-61870	SPRING	1							
60	1	129100-61930	NUT, CAP	1							
61	1	119600-66020	SPRING, REGULATOR	1							
62	1	119621-66051	LEVER, REGULATOR	1							
63	1	124550-66370	NUT, M6	1							
64	1	119233-66511	STOPPER ASSY	1							
64-1	1	119653-66500	STOPPER ASSY	1							N
	(A=E11963)										
66	2	24341-000280	O-RING, 1AS28.0	1							
68	2	26106-060952	BOLT, M6X 95 PLATED	1							
69	1	119629-66510	LIMITER ASSY, FUEL	1							
75	1	119610-66700	ANGLEICH ASSY	1							
99	1	26776-120002	NUT, LOCK M12	1							
100	1	121575-66830	SCREW	1							
101	1	119600-66840	NUT, CAP	1							
102	1	119656-66910	HOOK	1							
103	1	22360-040000	PIN, SNAP 4	1							
104	1	22360-060000	PIN, SNAP 6	1							
105	1	26106-060702	BOLT, M6X 70 PLATED	5							
106	1	26116-050102	BOLT, M5X 10 PLATED	3							

N:Old ←Yes/No→ New. Q:Old ←No/Yes→ New. R:Old ←Yes/Yes→ New. S:Old ←No/No→ New. W:Add. Z:Discontinued. F:Interchangeable by set. K:Q'ty Change

++ CONTINUE ++

Copyright (C) YANMAR CO., LTD. All RightsReserved.

Fig.11. GOVERNOR

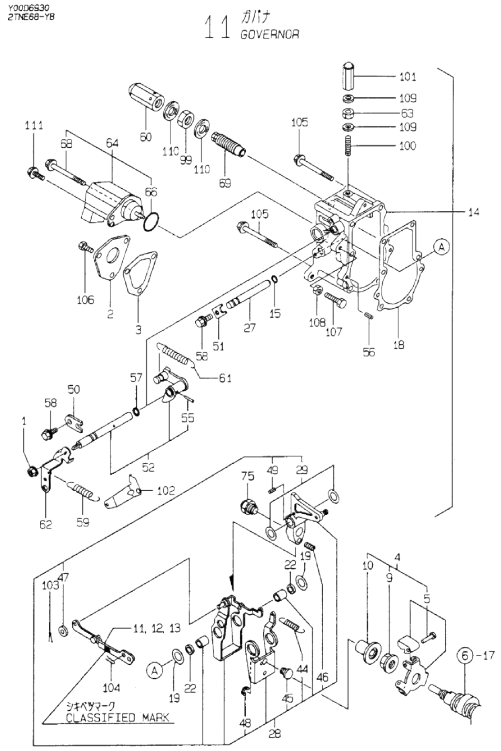

Remarks
(1) SELECTIVE PARTS: CERTAIN THE CLASSIFICATION MARK, THEN PLACE YOUR ORDER.(REFER TO ILLUSTRATION).

(A)=2TNE68-YB
(B)=
(C)=
(D)=
(E)=
(F)=

No.	Lev.	Parts No.	Description	Q'ty (A)	(B)	(C)	(D)	(E)	(F)	I	R
107	1	26116-060304	BOLT, M6X 30 PLATED	1							
108	1	26756-060002	NUT, LOCK M6	1							
109	1	22190-060003	SEAL WASER 6	2							
110	1	22190-120002	WASHER, SEAL 12	2							
111	1	121465-59950	BOLT, M6X16	1							

N:Old ←Yes/No→ New. Q:Old ←No/Yes→ New. R:Old ←Yes/Yes→ New. S:Old ←No/No→ New. W:Add. Z:Discontinued. F:Interchangeable by set. K:Q'ty Change

Copyright (C) YANMAR CO., LTD. All RightsReserved.

Fig.12. FUEL INJECTION VALVE

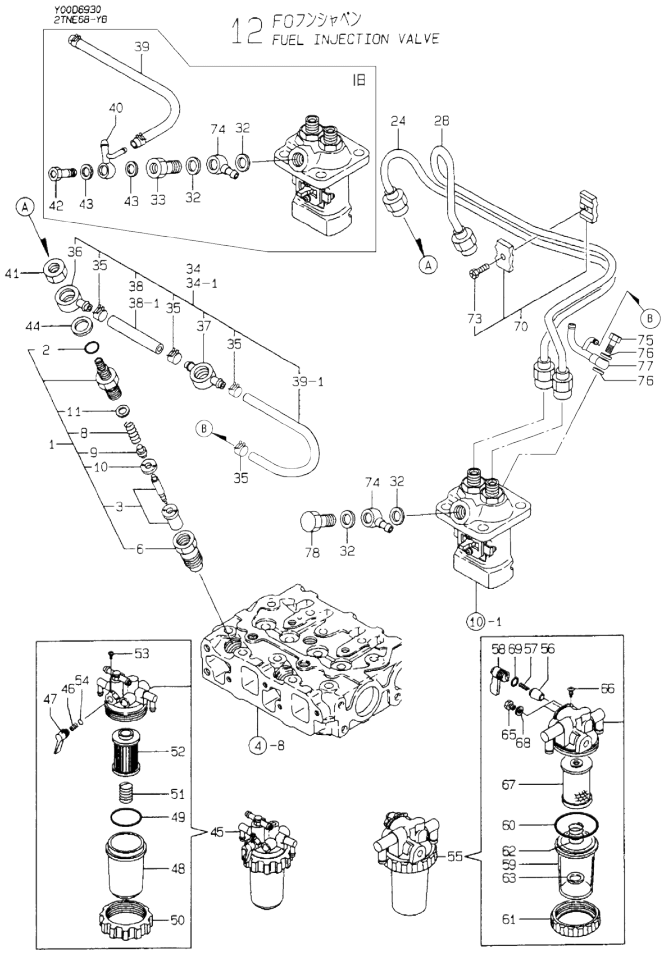

(A)=2TNE68-YB
(B)=
(C)=
(D)=
(E)=
(F)=

No.	Lev.	Parts No.	Description	Q'ty (A)	(B)	(C)	(D)	(E)	(F)	I	R
1	1	719255-53100	VALVE ASSY,INJECTION	2							
2	2	129155-61830	O-RING, S10	2							
3	2	119620-53000	VALVE ASSY,INJECTION	2							
6	2	119620-53080	NUT, NOZZLE	2							
8	2	119620-53120	SPRING, NOZZLE	2							
9	2	114250-53130	SEAT, SPRING	2							
10	2	119620-53140	SPACER, VALVE STOP	2							
11	2	114250-53400	SHIM SET	2							
24	1	119309-59810	PIPE ASSY, INJECTION	1							
28	1	119309-59820	PIPE ASSY, INJECTION	1							
32	1	22190-120002	WASHER, SEAL 12	2							
33	1	119650-59200	BOLT, PIPE JOINT M12	1							
34	1	119332-59540	PIPE ASSY, RETURN	1							
34-1	1	119520-59540	PIPE ASSY, RETURN	1						N	
	(A=E*****)										
35	2	124066-59100	CLIP, HOSE 8	4							
36	2	119260-59520	JOINT	1							
37	2	119260-59530	JOINT	1							
38	2	119260-59550	PIPE, FUEL	1							
38-1	2	105025-59550	PIPE, FUEL RETURN	1						N	
	(A=E*****)										
39	2	119642-59550	PIPE, FUEL RETURN	1							
39-1	2	119000-59560	PIPE, FUEL RETURN	1						N	
	(A=E*****)										
40	2	119642-59570	JOINT, OVER FLOW	1							
41	1	119620-59700	NUT, NOZZLE	2							
42	1	124550-59820	BOLT, PIPE JOINT M8	1							
43	1	22190-080002	WASHER, SEAL 6	2							
44	1	22190-140002	WASHER, SEAL 14	2							
45	1	119255-55620	FILTER ASSY, FUEL	1							
46	2	104200-55330	SPRING, VALVE	1							
47	2	119810-55340	LEVER	1							
48	2	121254-55510	COVER	1							
49	2	102103-55520	O-RING	1							
50	2	110250-55610	RING, RETAINING	1							
51	2	121250-55620	SPRING	1							
52	2	124550-55700	FILTER, FUEL L=90	1							
53	2	104200-55750	SCREW, M4	1							
54	2	24311-240100	O-RING, 1AP10A	1							
55	1	129335-55700	SEPARATOR ASSY,WATER	1							
56	2	104200-55321	VALVE, TAPER	1							
57	2	104200-55330	SPRING, VALVE	1							
58	2	104200-55341	HANDLE	1							
59	2	124064-55510	COVER	1							
60	2	102103-55520	O-RING	1							
61	2	110250-55610	RING, RETAINING	1							
62	2	121257-55720	SPRING	1							
63	2	121257-55731	FLOAT	1							
65	2	101720-55750	PLUG, 6	2							
66	2	104200-55750	SCREW, M4	1							
67	2	171081-55910	SCREEN	1							

N:Old $\xleftarrow[\text{No}]{\text{Yes}}$ New. Q:Old $\xleftarrow[\text{Yes}]{\text{No}}$ New. R:Old $\xleftarrow[\text{Yes}]{\text{Yes}}$ New. S:Old $\xleftarrow[\text{No}]{\text{No}}$ New. W:Add. Z:Discontinued. F:Interchangeable by set. K:Q'ty Change

++ CONTINUE ++

Copyright (C) YANMAR CO., LTD. All RightsReserved.

Fig.12. FUEL INJECTION VALVE

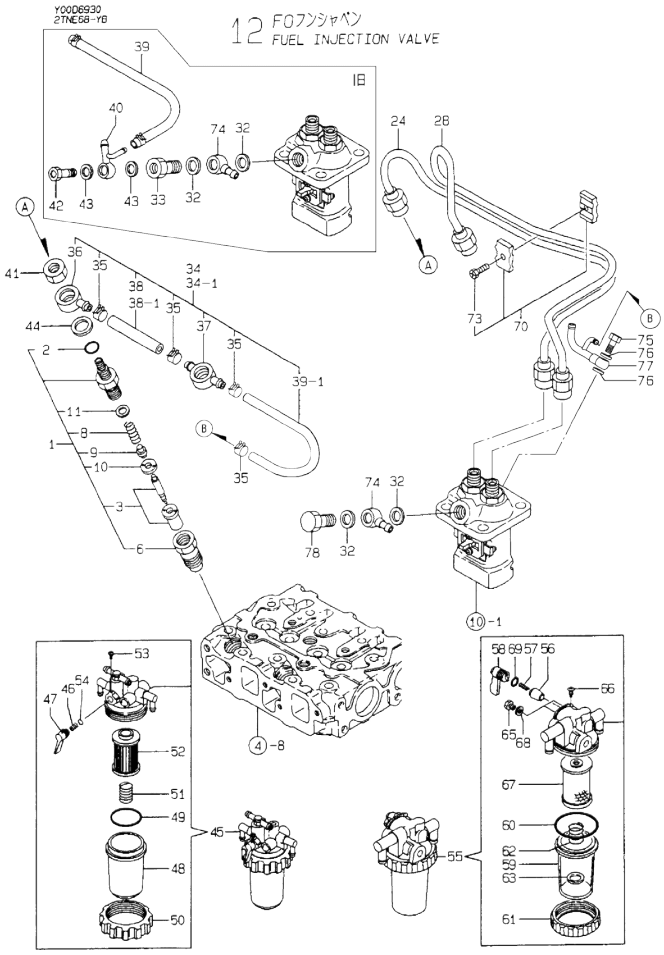

(A)=2TNE68-YB (D)=
(B)= (E)=
(C)= (F)=

No.	Lev.	Parts No.	Description	Q'ty (A)	(B)	(C)	(D)	(E)	(F)	I	R
68	2	23418-060000	GASKET, 6X1.0	2							
69	2	24311-240100	O-RING, 1AP10A	1							
70	1	119305-59120	RETAINER, PIPE	1							
73	2	129150-59131	BOLT, M4X14	1							
74	1	101304-59020	JOINT, PIPE 12	1							
75	1	119266-59580	BOLT, PIPE JOINT M8	1							N
	(A=E*****)										
76	1	22190-080002	WASHER, SEAL 6	2							N
	(A=E*****)										
77	1	119655-59570	JOINT, OVER FLOW	1							N
	(A=E*****)										
78	1	105340-59190	BOLT ASSY, JOINT	1							N
	(A=E*****)										

N:Old ←Yes/No→ New. Q:Old ←No/Yes→ New. R:Old ←Yes/Yes→ New. S:Old ←No/No→ New. W:Add. Z:Discontinued. F:Interchangeable by set. K:Q'ty Change

Copyright (C) YANMAR CO., LTD. All RightsReserved.

Fig.13. STARTING MOTOR

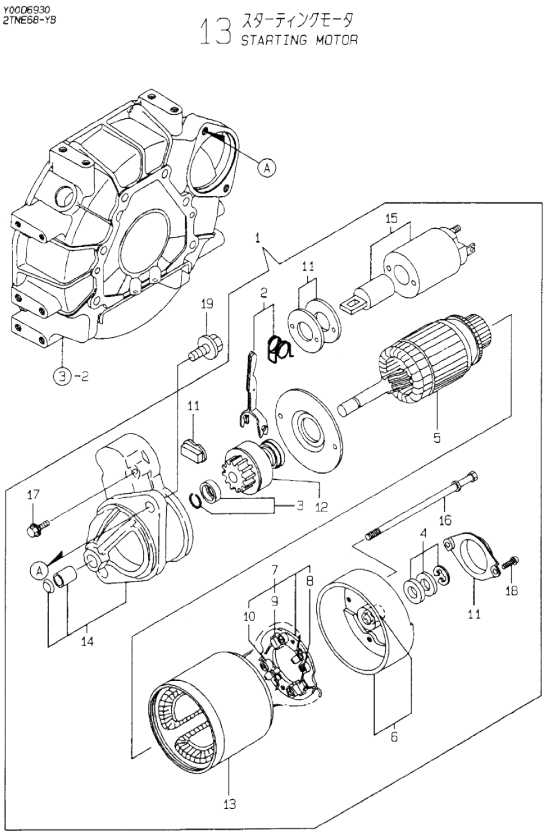

(A)=2TNE68-YB
(B)=
(C)=
(D)=
(E)=
(F)=

No.	Lev.	Parts No.	Description	Q'ty (A)	(B)	(C)	(D)	(E)	(F)	I	R
1	1	119226-77010	STARTER,12V-0.8KW	1							
2	2	X2114560130	LEVER KIT, SHIFT	1							
3	2	X2114715500	STOPPER SET	1							
4	2	X2114811000	WASHER KIT, THRUST	1							
5	2	114371-77110	ARMATURE	1							
6	2	114371-77140	COVER ASSY, REAR	1							
7	2	114371-77160	HOLDER ASSY, BRUSH	1							
8	3	114371-79040	BRUSH	2							
9	3	114371-79050	BRUSH	1							
10	3	114371-79060	SPRING	4							
11	2	114371-77170	COVER ASSY, DUST	1							
12	2	119226-77650	CLUTCH ASSY	1							
13	2	124097-77710	YOKE ASSY	1							
14	2	124097-77760	CASE ASSY, GEAR	1							
15	2	124195-77760	MAGNETIC SWITCH ASSY	1							
16	2	124195-77770	BOLT, THROUGH	2							
17	2	114371-79070	BOLT	2							
18	2	26022-040122	SCREW, M4X12	2							
19	1	26106-100252	BOLT, M10X 25 PLATED	2							

N:Old ←Yes/No→ New. Q:Old ←No/Yes→ New. R:Old ←Yes/Yes→ New. S:Old ←No/No→ New. W:Add. Z:Discontinued. F:Interchangeable by set. K:Q'ty Change

Copyright (C) YANMAR CO., LTD. All RightsReserved.

Fig.14. GENERATOR

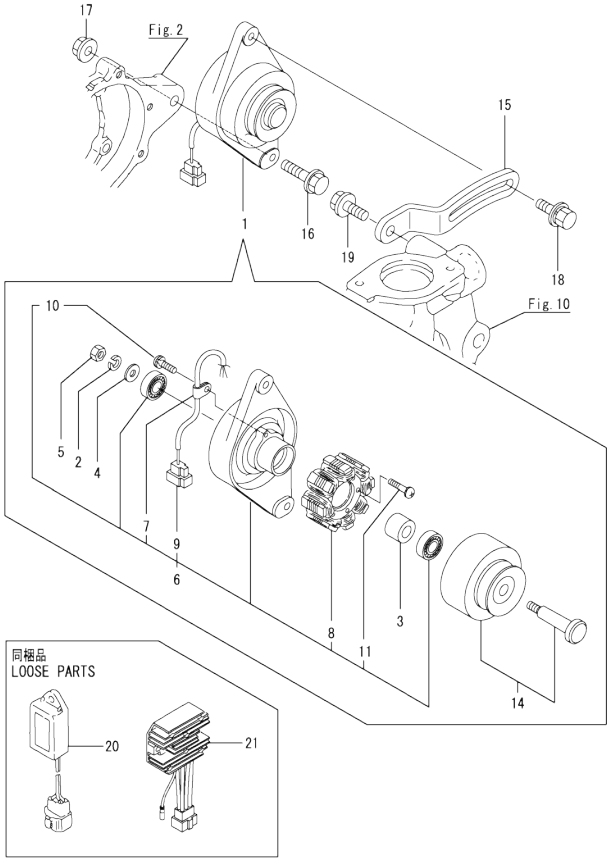

(A)=2TNE68-YB (D)=
(B)= (E)=
(C)= (F)=

No.	Lev.	Parts No.	Description	Q'ty (A)	(B)	(C)	(D)	(E)	(F)	I	R
1	1	129150-77202	GENERATOR	1							
1-1	1	129150-77203	DINAMO ASSY	1						N	
	(A=E64035)										
2	2	XM219230000	WASHER, SPRING	1							
3	2	XM329830000	COLLAR	1							
4	2	XM860250000	WASHER, 10	1							
5	2	XM863720000	NUT	1							
6	2	129150-77210	PLATE ASSY	1							
7	3	XM069000000	CLAMP	1							
8	3	XM081780000	STATOR	1							
9	3	XM178780000	COUPLER	1							
10	3	XYSPS400800	SCREW	1							
11	3	XYSPS402400	SCREW	2							
14	2	129150-77230	FLYWHEEL ASSY	1							
14-1	2	129150-77280	FLYWHEEL ASSY	1						N	
	(A=E64035)										
15	1	119325-77310	ADJUSTER	1							
15-1	1	119325-77311	ADJUSTER	1						N	
	(A=E11963)										
16	1	119233-77251	BOLT	1							
17	1	26366-080002	NUT, M8	1							
18	1	26014-080252	BOLT, M8X 25	1							
19	1	26106-080202	BOLT, M8X 20 PLATED	1							
20	1	129211-77920	TIMER	1							
21	1	119653-77710	CURRENT LIMITER	1							

N:Old ←Yes/No→ New. Q:Old ←No/Yes→ New. R:Old ←Yes/Yes→ New. S:Old ←No/No→ New. W:Add. Z:Discontinued. F:Interchangeable by set. K:Q'ty Change

Copyright (C) YANMAR CO., LTD. All RightsReserved.

Fig.15. GASKET SET

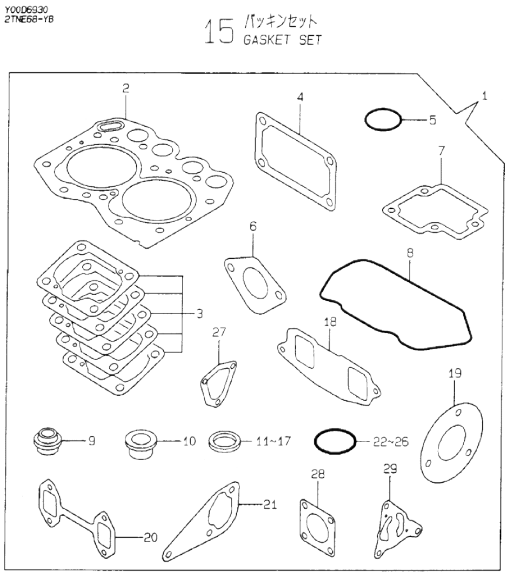

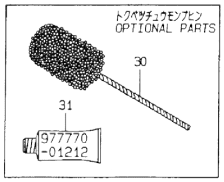

(A)=2TNE68-YB (D)=
(B)= (E)=
(C)= (F)=

No.	Lev.	Parts No.	Description	Q'ty (A)	(B)	(C)	(D)	(E)	(F)	I	R
1	1	719325-92610	GASKET SET	1							1
2	2	119309-01330	GASKET, CYL. HEAD	1							
3	2	119305-01950	SHIM SET, ADJUSTING	1							
4	2	119660-01562	GASKET	1							
5	2	24311-000320	O-RING, 1AP32.0	2							
6	2	121520-01851	GASKET	1							
7	2	119305-03031	GASKET	1							
8	2	119305-11310	GASKET, BONNET	1							
9	2	119260-11340	SEAL, VALVE STEM	4							
10	2	119600-11450	PROTECTOR, NOZZLE	2							
11	2	119600-11460	GASKET, NOZZLE	4							
12	2	124465-44950	GASKET, 16	1							
13	2	22190-060003	SEAL WASER 6	2							
14	2	22190-120002	WASHER, SEAL 12	4							
15	2	129150-49360	GASKET	1							
16	2	22190-080002	WASHER, SEAL 6	2							
17	2	22190-140002	WASHER, SEAL 14	2							
18	2	119326-12111	GASKET, MANIFOLD	1							
19	2	124701-11911	GASKET, SILENCER	1							
20	2	119305-13110	GASKET	1							
21	2	119260-42020	GASKET, WATER PUMP	1							
22	2	24321-000350	O-RING, 1AG35.0	1							
23	2	24311-000120	O-RING, 1AP12.0	2							
24	2	24341-000240	O-RING, 1AS24.0	1							
25	2	119209-35030	O-RING, P11	1							
26	2	119624-32040	O-RING, P12.0	2							
27	2	119660-61071	GASKET	1							
28	2	103954-13201	GASKET, SILENCER	1							
29	2	119660-32020	GASKET, PUMP	1							
30	1	129400-92400	HONE	1							1
31	1	977770-01212	GASKET, LIQUID	1							1

Remarks
(1) OPTIONAL PART.

N:Old ◄Yes/No► New. Q:Old ◄No/Yes► New. R:Old ◄Yes/Yes► New. S:Old ◄No/No► New. W:Add. Z:Discontinued. F:Interchangeable by set. K:Q'ty Change

Copyright (C) YANMAR CO., LTD. All RightsReserved.

Parts No. Index

Parts No.	Fig. No.	Ref. No.
101304-59020	12	74
101720-55750	12	65
102103-55520	12	49
		60
103954-13201	5	12
	15	28
104200-55321	12	56
104200-55330	12	46
		57
104200-55341	12	58
104200-55750	12	53
		66
104264-59030	2	35
105010-11230	4	30
		34
105025-59550	12	38 -1
105340-59190	12	78
105546-51330	10	24
105582-59150	2	36
110250-55610	12	50
		61
114250-11120	4	20
114250-11180	4	21
114250-53130	12	9
114250-53400	12	11
114371-77110	13	5
114371-77140	13	6
114371-77160	13	7
114371-77170	13	11
114371-79040	13	8
114371-79050	13	9
114371-79060	13	10
114371-79070	13	17
119000-59560	12	39 -1
119131-18320	5	9
119209-35030	8	26
	15	25
119225-35300	8	16
119225-42290	9	15
119225-42320	9	10
119225-51100	10	3
119225-51300	10	21
119226-77010	13	1
119226-77650	13	12
119232-61510	11	28
119232-61540	11	44
119233-66511	11	64
119233-77251	14	16
119255-55620	12	45
119256-42360	9	14

Parts No.	Fig. No.	Ref. No.
119256-49530	9	18
119259-44570	9	30
119260-01510	2	17
119260-01590	2	1
119260-02020	1	6
119260-02800	1	16
119260-02930	1	19
119260-07900	4	5
119260-11100	4	18
119260-11110	4	19
119260-11260	4	40
119260-11270	4	41
119260-11280	4	42
119260-11340	4	23
	15	9
119260-11370	4	24
119260-11800	4	13
119260-14100	6	7
119260-14200	6	1
119260-14400	6	2
119260-21200	7	5
119260-23910	7	31
119260-25100	6	11
119260-32000	8	1
119260-42002	9	1
119260-42020	9	12
	15	21
119260-49800	9	19
119260-59520	12	36
119260-59530	12	37
119260-59550	12	38
119265-11260	4	44
119265-22300	7	25
119265-22500	7	19
119265-22601	7	17
119265-23100	7	27
119265-23200	7	32
119266-01200	1	24
119266-02410	1	22
119266-11390	4	53
119266-51900	10	45
119266-59580	12	75
119275-01600	3	2
119285-61120	11	11
119285-61130	11	12
119285-61140	11	13
119285-66080	11	52
119305-01490	2	14
119305-01950	2	23
	15	3

Parts No.	Fig. No.	Ref. No.
119305-03020	4	48
119305-03031	4	49
	15	7
119305-11240	4	37
119305-11310	4	52
	15	8
119305-12150	5	1
119305-13100	5	5
119305-13110	5	6
	15	20
119305-14200	6	17
119305-14580	6	3
119305-35150	8	15
119305-51500	10	30
119305-51530	10	32
119305-59120	12	70
119305-77820	4	59
119309-01330	1	25
	15	2
119309-21700	7	1
119309-59810	12	24
119309-59820	12	28
119325-11200	4	28
119325-11350	4	46
119325-21650	7	9
119325-34810	8	13 -1
119325-34890	8	14
119325-44510	9	29
119325-77310	14	15
119325-77311	14	15 -1
119326-01770	3	7
119326-12111	5	2
	15	18
119326-21590	7	13
119326-34800	8	13
119326-35080	8	25
119332-44740	9	16
119332-59540	12	34
119520-59540	12	34 -1
119600-11450	4	26
	15	10
119600-11460	4	27
	15	11
119600-52021	2	30
119600-61100	11	4
119600-61200	11	5
119600-61541	11	45
119600-61900	11	50
119600-66020	11	61
119600-66840	11	101

Parts No.	Fig. No.	Ref. No.
119610-66700	11	75
119620-01750	3	3
119620-01800	2	4
119620-02450	6	4
119620-11350	4	6
119620-21500	7	12
119620-21941	7	11
119620-25912	6	13
119620-42291	9	15 -1
119620-51170	10	6
119620-51180	10	7
119620-51190	10	8
119620-51250	10	9
119620-51340	10	25
119620-51350	10	26
119620-51370	10	27
119620-51450	10	28
119620-51510	10	31
119620-51650	10	33
119620-51660	10	34
119620-51670	10	35
119620-51680	10	36
119620-51700	10	37
119620-53000	12	3
119620-53080	12	6
119620-53120	12	8
119620-53140	12	10
119620-59700	12	41
119621-21680	7	10
119621-66051	11	62
119624-32040	2	6
	15	26
119629-66510	11	69
119632-07900	4	60
119632-61200	11	14
119640-01640	3	10
119642-59550	12	39
119642-59570	12	40
119650-59200	12	33
119653-66500	11	64 -1
119653-77710	14	21
119655-59570	12	77
119656-66910	11	102
119660-01551	2	20
119660-01562	2	21
	15	4
119660-01570	2	22
119660-01911	2	5
119660-25022	6	9
119660-25052	6	10

Parts No. Index

Parts No.	Fig. No.	Ref. No.
119660-32020	8	11
	15	29
119660-61052	11	18
119660-61060	11	2
119660-61071	11	3
	15	27
119660-61300	11	9
119660-61341	11	10
119660-61460	11	19
119660-61491	11	27
119660-61651	11	46
119660-61901	11	51
119810-55340	12	47
119840-61870	11	59
121023-01550	2	32
121250-44901	9	24
121250-55620	12	51
121254-55510	12	48
121257-55720	12	62
121257-55731	12	63
121450-01560	2	18
121450-42450	9	26 -1
121450-44531	9	33
121465-59950	11	111
121468-44510	9	31
121468-44540	9	34
121470-44581	9	36
121520-01851	2	29
	15	6
121575-66830	11	100
124060-01050	1	5
124064-55510	12	59
124066-59100	12	35
124085-02220	3	5
124097-77710	13	13
124097-77760	13	14
124160-01751	2	12
	4	62
124160-11360	4	56
124160-39450	8	28
124195-77760	13	15
124195-77770	13	16
124250-49351	9	26
124450-44560	9	35
124465-44950	9	27
		27 -1
	15	12
124550-55700	12	52
124550-59820	12	42
124550-66370	11	63

Parts No.	Fig. No.	Ref. No.
124574-44761	9	25
124701-11911	5	11
	15	19
124950-21600	7	15
129100-01580	3	1
	7	2
129100-61930	11	60
129150-35350	8	24
129150-49081	9	39
129150-49360	9	28
	15	15
129150-59131	12	73
129150-77202	14	1
129150-77203	14	1 -1
129150-77210	14	6
129150-77230	14	14
129150-77280	14	14 -1
129155-51280	11	15
129155-61480	11	22
129155-61830	12	2
129211-77920	14	20
129335-55700	12	55
129400-92400	15	30
129550-49101	9	38
129795-77800	4	58
171056-49120	9	23
171081-55910	12	67
174307-51460	10	29
174307-51700	11	29
194990-22050	2	27
	11	1
22117-040000	11	47
22190-060003	11	109
	15	13
22190-080002	2	37
		38
	12	43
		76
	15	16
22190-120002	11	110
	12	32
	15	14
22190-140002	12	44
	15	17
22190-220002	3	11 -1
22242-000100	4	43
22242-000200	6	15
22252-000200	7	26
22272-000040	11	48
22322-030160	11	55

Parts No.	Fig. No.	Ref. No.
22351-030010	7	16
22351-030012	7	8
22351-030014	11	49
22351-040010	2	19
	11	56
22351-060012	4	25
22360-040000	11	103
22360-060000	11	104
22512-040120	6	8
		21
	7	6
22857-500100	4	55
23065-070130	9	37
23065-120650	4	1
23414-080012	10	46
23418-060000	12	68
23876-020000	4	16
24102-063034	6	22
24311-000120	4	57
	15	23
24311-000320	2	13
	4	63
	15	5
24311-240100	12	54
		69
24321-000350	9	20
	15	22
24341-000070	11	57
24341-000240	2	33
	15	24
24341-000250	3	11
24341-000280	11	66
26014-080252	14	18
26022-040082	10	41
26022-040122	13	18
26033-040102	10	42
26106-060102	3	6
		13
	11	58
26106-060122	1	23
	3	12
	4	61
	6	16
	8	27
26106-060162	2	7
		31
		34
	5	3
	9	17
		21

Parts No.	Fig. No.	Ref. No.
26106-060282	5	4
26106-060302	2	8
26106-060402	2	9
	5	7
26106-060502	2	10
26106-060552	9	22
26106-060652	2	11
26106-060702	11	105
26106-060952	11	68
26106-080142	4	7
26106-080202	14	19
26106-080452	9	13
26106-100252	13	19
26116-050102	11	106
26116-060304	11	107
26206-100252	3	4
26216-060402	5	8
26366-060002	2	28
	5	10
26366-080002	4	45
	14	17
26450-060202	8	12
26756-060002	4	32
		36
	11	108
26776-120002	11	99
27221-050080	4	17
27221-060100	1	11
27231-400000	1	12
27241-100000	1	13
27241-250000	1	14
27241-300000	1	15
27241-350000	4	15
27310-055001	4	22
719255-53100	12	1
719260-02870	1	26
719260-23600	7	33
719260-23610	7	35
719305-51100	10	1
719325-01560	1	1
719325-11700	4	8
719325-92610	15	1
719489-11650	4	29
719489-11660	4	33
977770-01212	2	39
	3	14
	15	31
X2114560130	13	2
X2114715500	13	3
X2114811000	13	4

Parts No. Index

Parts No.	Fig. No.	Ref. No.
XM069000000	14	7
XM081780000	14	8
XM178780000	14	9
XM219230000	14	2
XM329830000	14	3
XM860250000	14	4
XM863720000	14	5
XYSPS400800	14	10
XYSPS402400	14	11

Parts No.	Fig. No.	Ref. No.

Parts No.	Fig. No.	Ref. No.

Parts No.	Fig. No.	Ref. No.