YANMAR

PARTS CATALOG

0CD10-M67001EN

Last update Aug., 2015

PREFACE

1.This parts catalog is the Second edition of 3TNE68-TB1, ETB1 for Takeuchi Mfg. Co., Ltd.

2. Parts catalog history

	Parts catalog No,	Date of issue	Remarks
1st. edition	000Y00D6700	July.1998	Abolish old edition
2nd. edition	000Y00D6701	May.2000	

3.This parts catalog dose not contain the technical data needed for maintenance service

4.The illustrations used in this parts catalog have been simplified for clarity.

5. Model name

Engine model	Vehicle		Vehicle made by
	Products	Model name	
3TNE68-TB1	EXCAVATOR	TB015	Takeuchi Mfg. Co., Ltd.
3TNE68-ETB1		A3C	

6.The contents of this parts catalog are subject to change without prior notice.

Directions for the Parts Catalog.

1.This Parts Catalog shows both standard and optional parts.
2.Parts may change without prior notice.
3.The following is an example of the Parts Catalog format.

0CF10-G21601 29. FUEL INJECTION PUMP(W/BOOST)

(A)=4JH-DT
(B)=4JH-DTZ
(C)=4JH-DTZP
(D)=4JH-DTZA
(E)=4JH-DTZY
(F)=

① REF.	② LEV.	PARTS NO.	DESCRIPTION	Q'TY (A)	(B)	(C)	(D)	(E)	(F)	③ I	⑤ R
1	1	729595-51390	FUEL INJECTION PUMP	1	1	1	1	1			1
1-1	1	729595-51391	FUEL INJECTION PUMP	1	1	1	1	1		N	1
	(A=E00185)	(B=E00200)									
3	2	26022-060162	SCREW M 6X 16	9	9	9	9	9			
3-1 ④	2	26022-060162	SCREW M 6X 16	4	4	4	4	4		K	
	(A=E00156)	(B=E00156)	(C=E00156) (D=E00156)	(E=E00156)							
4	2	129470-51040	CAMSHAFT	1	1	1	1	1			
5	2	122710-51050	BEARING, ROLLER	2	2	2	2	2			
6	2	129470-51060	RETAINER	1	1	1	1	1			

Remarks
(1) BOOST COMPEMSATOR TYPE. OPTIONAL PART, TO E00155,(4JH-DT, 4JH-DTZ

①Ref. No.

The Ref. No. listed may not be in accordance with the illustration Ref. No.

(Ex.) Illustration No. 1 List Ref No. 1 (Before change) → 1- 1 (After change)

For interchangeable symbols N, R and K, illustrations for new parts may be abbreviated.

②Lev. (Level)

Level indication
The numbers below indicate the level of relativity towards the main part.
1 ----- Main parts (Assembly parts)
2 ----- Sub component included in " 1 ".
3 ----- Sub component included in " 2 ".
Note) Parts that are not for sale are partially illustrated but not listed.

③Interchangeability Symbol

When a part change takes place, one of the following interchangeability symbols is indicated beside the part.

Symbol	Interchangeability	Contents note
N	Old ← Yes / No → New	New Part is interchangeable for Old Part but Old Part is not interchangeable for New Part.
Q	Old ← No / Yes → New	New Part is not interchangeable for Old Part but Old Part is interchangeable for New Part.
R	Old ← Yes / Yes → New	New/ Old Parts are both interchangeable.
S	Old ← No / No → New	New/ Old Parts are both not interchangeable.
W		Part newly added.
Z		Part discontinued.
F		Not interchangeable by a single part but interchangeable together with related parts.
K		Changes only for used parts quantities.

④Effective Machine No.

When a part changes, the effective Machine No. will be indicated in the (A)-(F) column.

Product Symbol	Product No.	Product Symbol	Product No.
C	Clutch No. Compressor No.	F	Machine No. (Agricultural Equip.)
D	Drive No.	M	Machine No.
E	Engine No.		

Note 1) A date may follow the symbol. (Ex.) 1996.01
Note 2) " XXXXX " and " ZZZZZ " are for parts that could not be predicted or for engine models that could not be identified.
Note 3) (A=E00185) is the E (Engine Serial Number) for the column (A) model (in this case 4JH-DT) after the parts design change.

⑤Remarks

Figures or alphabets (symbols) are entered in the remarks column.
The comments (remarks) on parts that are indicated at the bottom of the illustration are the same symbols as those stated above.

Contents

0CD10-M67001

Fig. No.	Fig. Name	Fig. No.	Fig. Name
3TNE68-(E)TB1			
1.	CYLINDER BLOCK		
2.	GEAR HOUSING		
3.	FLYWHEEL HOUSING & OIL SUMP		
4.	CYLINDER HEAD & BONNET		
5.	SUCTION MANIFOLD & AIR CLEANER		
6.	EXHAUST MANIFOLD & SILENCER		
7.	CAMSHAFT & DRIVING GEAR		
8.	CRANKSHAFT & PISTON		
9.	LUB.OIL SYSTEM		
10.	COOLING WATER SYSTEM		
11.	FUEL INJECTION PUMP		
12.	GOVERNOR		
13.	FUEL INJECTION VALVE		
14.	FUEL LINE		
15.	STARTING MOTOR		
16.	GENERATOR		
17.	GASKET SET		

Fig.1. CYLINDER BLOCK

(A)=3TNE68-TB1
(B)=3TNE68-ETB1
(C)=
(D)=
(E)=
(F)=

No.	Lev.	Parts No.	Description	Q'ty (A)	(B)	(C)	(D)	(E)	(F)	I	R
1	1	719265-01560	BLOCK ASSY, CYLINDER	1	1						
5	2	124060-01050	PLUG, PT1/8	2	2						
6	2	119260-02020	BOLT, METAL CAP	8	8						
11	2	27221-060100	PLUG, 6X10	1	1						
12	2	27231-400000	PLUG 40	1							
12-1	2	119265-01250	PLUG, 40	1	1					N	
	(A=EXXX)										
13	2	27241-100000	PLUG, 10	2	2						
14	2	27241-250000	PLUG, 25	4	4						
15	2	27241-300000	PLUG 30	2	2						
16	2	119266-02410	BUSH	1	1						
17	2	719260-02800	BEARING, MAIN	4	4						
20	2	719260-02930	BEARING, THRUST	2	2						
23	1	119266-01200	BOLT, HEAD	14	14						
24	1	119265-01341	GASKET, HEAD	1	1						
25	1	26106-060122	BOLT, M6X 12 PLATED	2	2						
26	1	719260-02870	BEARING, 0.25 US	4	4						1

Remarks
(1) UNDER-SIZE(U.S=0.25)PART.

N:Old $\frac{\text{Yes}}{\text{No}}$ New. Q:Old $\frac{\text{No}}{\text{Yes}}$ New. R:Old $\frac{\text{Yes}}{\text{Yes}}$ New. S:Old $\frac{\text{No}}{\text{No}}$ New. W:Add. Z:Discontinued. F:Interchangeable by set. K:Q'ty Change

Copyright (C) YANMAR CO., LTD. All RightsReserved.

Fig.2. GEAR HOUSING

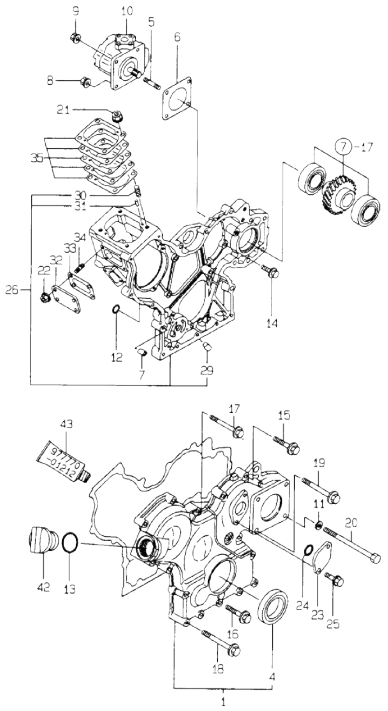

(A)=3TNE68-TB1
(B)=3TNE68-ETB1
(C)=
(D)=
(E)=
(F)=

No.	Lev.	Parts No.	Description	Q'ty (A)	(B)	(C)	(D)	(E)	(F)	I	R
1	1	119263-01590	COVER ASSY,GEAR CASE	1	1						
4	2	119620-01800	SEAL, OIL	1	1						
5	1	121450-01560	STUD, M8X22	1	1						
6	1	124240-01883	GASKET	1	1						
7	1	119660-01911	PIPE, KNOCK	4	4						
8	1	194990-22050	NUT, M8	3	3						
9	1	194990-22050	NUT, M8	1	1						
10	1	119462-26010	PUMP ASSY, HYDRAULIC	1	1						
11	1	22137-080000	WASHER, 8	2	2						
12	1	24311-000120	O-RING, 1AP12.0	2							
12-1	1	119624-32040	O-RING, P12.0	2	2					N	
	(A=FROM 1ST)										
13	1	24311-000320	O-RING, 1AP32.0	1	1						
14	1	26106-060162	BOLT, M6X 16 PLATED	6	6						
15	1	26106-060302	BOLT, M6X 30 PLATED	4	4						
16	1	26106-060402	BOLT, M6X 40 PLATED	3	3						
17	1	26106-060502	BOLT, M6X 50 PLATED	3	3						
18	1	26106-060652	BOLT, M6X 65 PLATED	6	6						
19	1	26106-080702	BOLT, M8X 70 PLATED	1	1						
20	1	26116-081302	BOLT, M8X130 PLATED	2	2						
21	1	194990-22050	NUT, M8	4	4						
22	1	26366-060002	NUT, M6	4	4						
23	1	121023-01550	COVER	1	1						
24	1	24341-000240	O-RING, 1AS24.0	1	1						
25	1	26106-060162	BOLT, M6X 16 PLATED	2	2						
26	1	119263-01490	CASE ASSY, GEAR	1	1						
29	2	119260-01510	PLUG	1	1						
30	2	121450-01560	STUD, M8X22	4	4						
31	2	22351-040010	PIN, SPRING 4.0X10	2	2						
32	1	119660-01551	COVER	1	1						
33	1	119660-01562	GASKET	1	1						
34	1	119660-01570	STUD, M6X12	4	4						
35	1	119623-01950	SHIM SET, ADJUSTING	1	1						
42	1	124160-01751	COVER, FILLER	1	1						
43	1	977770-01212	GASKET, LIQUID	1	1						1

Remarks
(1) OPTIONAL PART.

N:Old ←Yes/No→ New. Q:Old ←No/Yes→ New. R:Old ←Yes/Yes→ New. S:Old ←No/No→ New. W:Add. Z:Discontinued. F:Interchangeable by set. K:Q'ty Change

Copyright (C) YANMAR CO., LTD. All RightsReserved.

Fig.3. FLYWHEEL HOUSING & OIL SUMP

(A)=3TNE68-TB1
(B)=3TNE68-ETB1
(C)=
(D)=
(E)=
(F)=

No.	Lev.	Parts No.	Description	Q'ty (A)	(B)	(C)	(D)	(E)	(F)	I	R
1	1	129100-01580	PIN, M8X16	2	2						
2	1	119600-01600	HOUSING, FLYWHEEL	1	1						
3	1	121120-01620	BOLT, M10X28	3	3						
4	1	119620-01750	CAP	1	1						
5	1	26206-100252	BOLT, M10X 25 PLATED	6	6						
6	1	119620-01620	PIN, M6X10	2	2						
7	1	119660-01640	CASE ASSY, OIL SEAL	1	1						
9	2	124085-02220	SEAL, OIL	1	1						
10	1	26106-060222	BOLT, M6X 22 PLATED	10	10						
11	1	119454-01721	SPACER, OIL SUMP	1	1						
13	1	119260-01770	SUMP ASSY, OIL	1	1						
14	2	121400-01640	PLUG, 16	1	1						
16	2	24311-000180	O-RING, 1AP18.0	1	1						
17	1	26106-060102	BOLT, M6X 10 PLATED	3	3						
18	1	26106-060452	BOLT, M6X 45 PLATED	20	20						
19	1	977770-01212	GASKET, LIQUID	1	1						1

Remarks
(1) OPTIONAL PART.

N:Old ◄Yes/No► New. Q:Old ◄No/Yes► New. R:Old ◄Yes/Yes► New. S:Old ◄No/No► New. W:Add. Z:Discontinued. F:Interchangeable by set. K:Q'ty Change

Copyright (C) YANMAR CO., LTD. All RightsReserved.

Fig.4. CYLINDER HEAD & BONNET

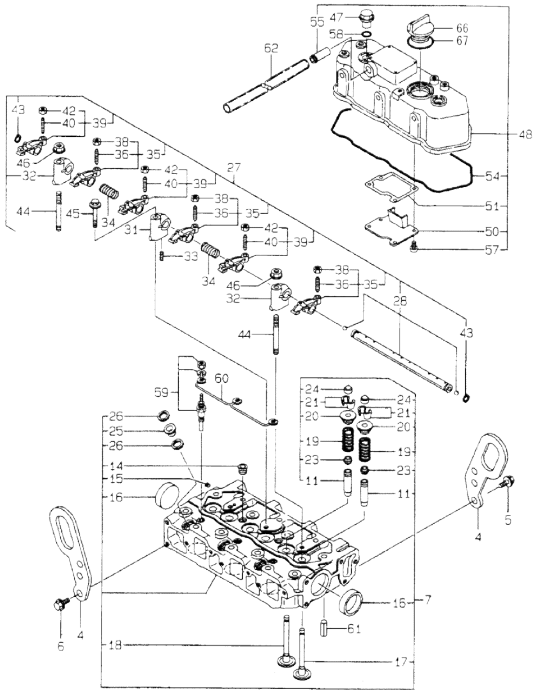

(A)=3TNE68-TB1
(B)=3TNE68-ETB1
(C)=
(D)=
(E)=
(F)=

No.	Lev.	Parts No.	Description	Q'ty (A)	(B)	(C)	(D)	(E)	(F)	I	R
4	1	119260-07900	LIFTER	2	2						
5	1	26106-080142	BOLT, M8X 14 PLATED	1	1						
6	1	26106-080142	BOLT, M8X 14 PLATED	2	2						
7	1	119265-11700	HEAD ASSY, CYLINDER	1	1						
11	2	119260-11800	GUIDE, VALVE	6	6						1
14	2	23871-030000	PLUG, R03	2							
14-1	2	23876-030000	PLUG, R03	2	2					N	
	(A=EXXX)										
15	2	27221-050080	PLUG, 5X 8	1	1						
16	2	27241-350000	PLUG, 35	2	2						
17	2	119260-11100	VALVE, INTAKE	3	3						
18	2	119260-11110	VALVE, EXHAUST	3	3						
19	2	114250-11120	SPRING, VALVE	6	6						
20	2	114250-11180	RETAINER, SPRING	6	6						
21	2	714250-11570	COTTER ASSY	6	6						
23	2	119260-11340	SEAL, VALVE STEM	6	6						
24	2	119260-11370	CAP, VALVE	6	6						
25	2	119600-11450	PROTECTOR, NOZZLE	3	3						
26	2	119600-11460	GASKET, NOZZLE	6	6						
27	1	119260-11200	SUPPORT ASSY, ARM	1	1						
28	2	119260-11240	SHAFT ASSY, ROCKER	1	1						
31	2	119260-11260	SUPPORT, ROCKER ARM	1	1						
32	2	119265-11260	SUPPORT, ROCKER ARM	2	2						
33	2	119260-11270	SCREW	1	1						
34	2	119260-11280	SPRING	2	2						
35	2	719260-11650	ARM ASSY, ROCKER	3	3						
36	3	105010-11230	SCREW, VALVE ADJUST	3	3						
38	3	26756-060002	NUT, LOCK M6	3	3						
39	2	719260-11660	ARM ASSY, ROCKER	3	3						
40	3	105010-11230	SCREW, VALVE ADJUST	3	3						
42	3	26756-060002	NUT, LOCK M6	3	3						
43	2	22242-000100	RING, 10	2	2						
44	1	119620-11350	STUD	2	2						
45	1	26106-080452	BOLT, M8X 45 PLATED	1	1						
46	1	26366-080002	NUT, M8	2	2						
47	1	124160-11360	KNOB	2	2						
48	1	119260-11330	BONNET ASSY, HEAD	1							
48-1	1	119260-11331	BONNET ASSY, HEAD	1	1					N	
	(A=E64997)										
50	2	119260-03020	PLATE, SHELTER	1	1						
51	2	119260-03031	GASKET	1	1						
54	2	119260-11310	GASKET, BONNET	1	1						
55	2	118400-03060	JOINT, BREATHER	1	1						
57	2	22857-500100	SCREW, 5X10	4	4						
58	1	24311-000120	O-RING, 1AP12.0	2	2						
59	1	129155-77801	PLUG, GLOW	3	3						
60	1	119620-77820	CONNECTOR, GLOW PLUG	1	1						
61	1	22351-060012	PIN, SPRING 6.0X12	2	2						
62	1	23065-120500	PIPE, 12X 500	1	1						
66	1	124160-01751	COVER, FILLER	1	1						
67	1	24311-000320	O-RING, 1AP32.0	1	1						

Remarks
(1) REPAIR PART.

N:Old ←Yes/No→ New. Q:Old ←No/Yes→ New. R:Old ←Yes/Yes→ New. S:Old ←No/No→ New. W:Add. Z:Discontinued. F:Interchangeable by set. K:Q'ty Change

Copyright (C) YANMAR CO., LTD. All RightsReserved.

Fig.5. SUCTION MANIFOLD & AIR CLEANER

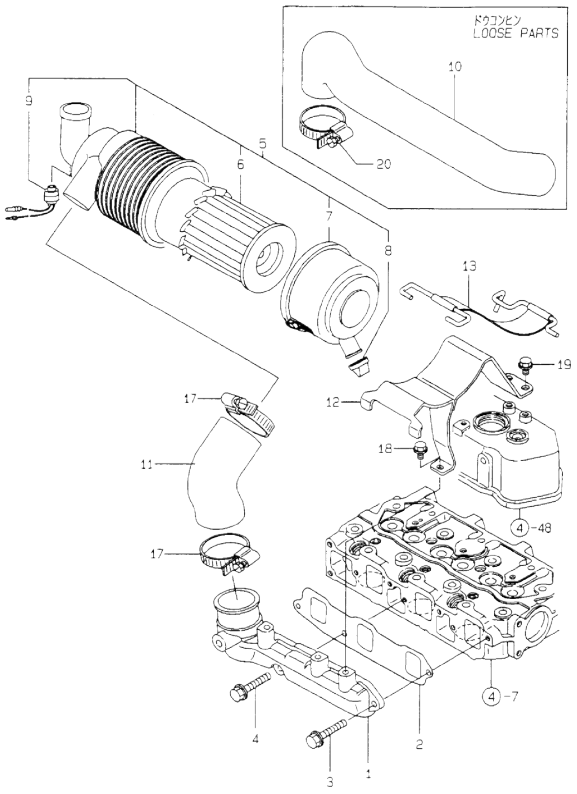

(A)=3TNE68-TB1
(B)=3TNE68-ETB1
(C)=
(D)=
(E)=
(F)=

No.	Lev.	Parts No.	Description	Q'ty (A)	(B)	(C)	(D)	(E)	(F)	I	R
1	1	119270-12100	MANIFOLD, AIR INTAKE	1							
1-1	1	119275-12101	MANIFOLD, AIR INTAKE	1	1						R
	(A=E65286)										
2	1	119270-12110	GASKET, MANIFOLD	1	1						
3	1	26106-060162	BOLT, M6X 16 PLATED	2	2						
4	1	26106-060282	BOLT, M6X 28 PLATED	1	1						
5	1	119254-12500	CLEANER ASSY, AIR	1	1						
6	2	119655-12560	ELEMENT	1	1						
7	2	105027-12570	COVER, AIR CREANER	1	1						
8	2	105027-12540	VALVE, UNLOADER	1	1						
9	2	126650-12680	INDICATOR	1	1						
10	1	119233-12210	PIPE, AIR INTAKE	1	1						
11	1	119233-12610	PIPE, AIR INTAKE	1	1						
12	1	119266-12580	BRACKET, AIR CLEANER	1	1						
13	1	119865-12600	BAND ASSY, CLEANER	1	1						
17	1	23000-054000	CLAMP, 54	2	2						
18	1	26106-060122	BOLT, M6X 12 PLATED	1	1						
19	1	26106-080142	BOLT, M8X 14 PLATED	2	2						
20	1	23000-054000	CLAMP, 54	1	1						

N:Old ←Yes/No→ New. Q:Old ←No/Yes→ New, R:Old ←Yes/Yes→ New, S:Old ←No/No→ New. W:Add. Z:Discontinued. F:Interchangeable by set. K:Q'ty Change

Copyright (C) YANMAR CO., LTD. All RightsReserved.

Fig.6. EXHAUST MANIFOLD & SILENCER

(A)=3TNE68-TB1
(B)=3TNE68-ETB1
(C)=
(D)=
(E)=
(F)=

No.	Lev.	Parts No.	Description	Q'ty (A)	(B)	(C)	(D)	(E)	(F)	I	R
1	1	119260-13100	MANIFOLD, EXHAUST	1	1						
2	1	119260-13110	GASKET	1	1						
3	1	26106-060352	BOLT, M6X 35 PLATED	4	4						
4	1	26216-060402	STUD, M6X 40	2	2						
5	1	119131-18320	STUD, M8X22	4	4						
6	1	26366-060002	NUT, M6	2	2						
7	1	119266-13580	PIPE	1						Z	
	(A=EXXX)										
8	1	119232-13500	SILENCER	1	1						
9	1	124701-11911	GASKET, SILENCER	2	2						
10	1	103954-13201	GASKET, SILENCER	1	1						

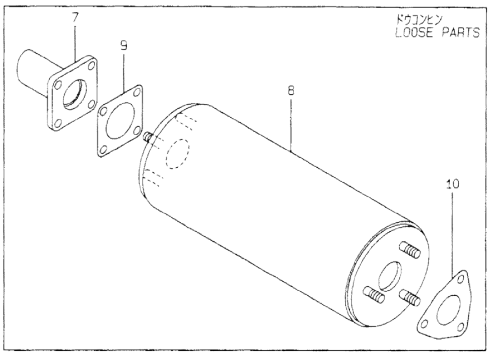

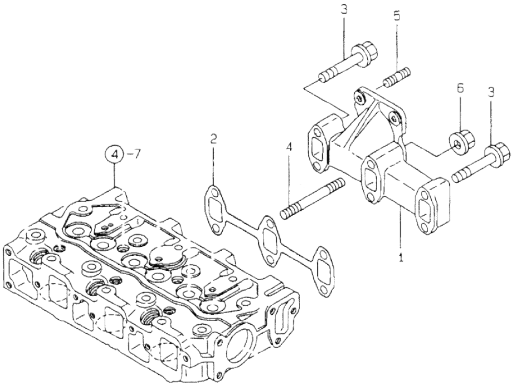

N:Old ←Yes/No→ New. Q:Old ←No/Yes→ New. R:Old ←Yes/Yes→ New. S:Old ←No/No→ New. W:Add. Z:Discontinued. F:Interchangeable by set. K:Q'ty Change

Copyright (C) YANMAR CO., LTD. All RightsReserved.

Fig.7. CAMSHAFT & DRIVING GEAR

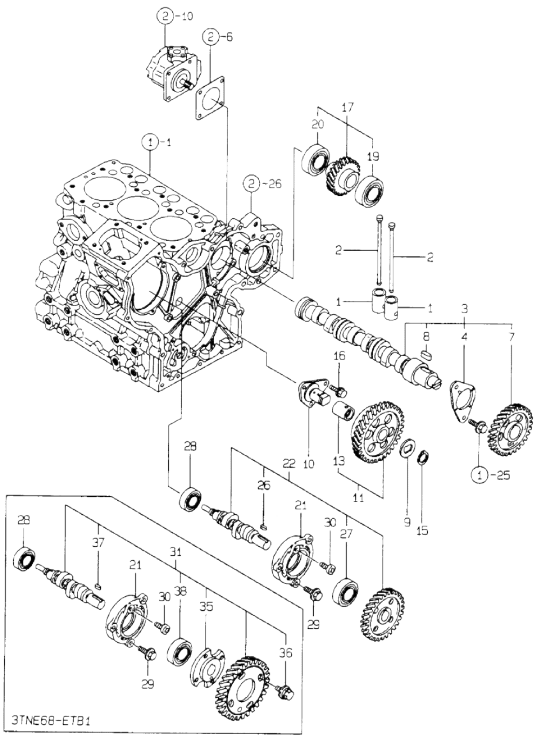

(A)=3TNE68-TB1
(B)=3TNE68-ETB1
(C)=
(D)=
(E)=
(F)=

No.	Lev.	Parts No.	Description	Q'ty (A)	(B)	(C)	(D)	(E)	(F)	I	R
1	1	119260-14200	TAPPET	6	6						
2	1	119260-14400	ROD, PUSH	6	6						
3	1	119260-14580	CAMSHAFT ASSY	1	1						
4	2	119620-02450	BEARING, THRUST	1	1						
7	2	119260-14100	GEAR, CAMSHAFT	1	1						
8	2	22512-040120	KEY, 4X 12	1	1						
9	1	119660-25022	RETAINER	1	1						
10	1	119660-25052	SHAFT, IDLE	1	1						
11	1	119260-25100	GEAR ASSY, IDLE	1	1						
13	2	119620-25912	BUSH	1	1						1
15	1	22242-000200	RING, 20	1	1						
16	1	26106-060122	BOLT, M6X 12 PLATED	3	3						
17	1	119263-26001	GEAR ASSY, PUMP	1	1						
19	2	129350-26490	BEARING, BALL 16005	1	1						
20	2	24104-060054	BEARING, BALL 6005UU	1	1						
21	1	119660-01821	BEARING, FUEL CAM	1	1						
22	1	119225-14200	CAM ASSY	1							
26	2	22512-040120	KEY, 4X 12	1							
27	2	24102-063034	BEARING, BALL 6303U	1							
28	1	24101-062034	BEARING, BALL 6203	1	1						
29	1	26106-060162	BOLT, M6X 16 PLATED	3	3						
30	1	26587-080102	SCREW, M8X10	1	1						
31	1	119225-14210	CAM ASSY		1						
35	2	119660-25920	FLANGE		1						
36	2	119660-25930	BOLT		4						
37	2	22512-040120	KEY, 4X 12		1						
38	2	24102-063034	BEARING, BALL 6303U		1						

Remarks
(1) REPAIR PART.

N:Old ◄Yes/No► New. Q:Old ◄No/Yes► New. R:Old ◄Yes/Yes► New. S:Old ◄No/No► New. W:Add. Z:Discontinued. F:Interchangeable by set. K:Q'ty Change

Copyright (C) YANMAR CO., LTD. All RightsReserved.

Fig.8. CRANKSHAFT & PISTON

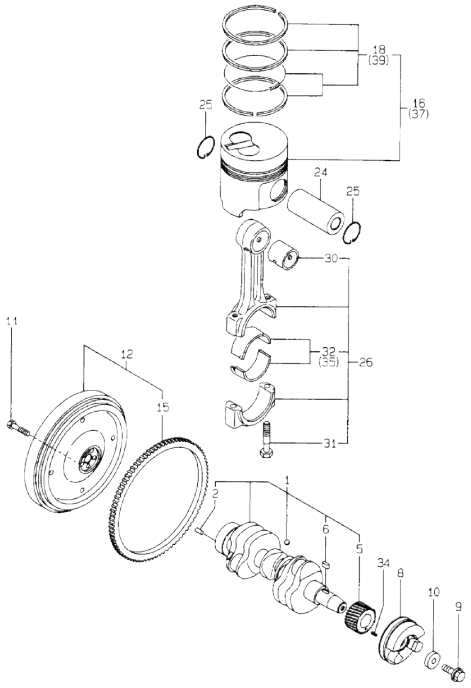

(A)=3TNE68-TB1
(B)=3TNE68-ETB1
(C)=
(D)=
(E)=
(F)=

No.	Lev.	Parts No.	Description	Q'ty (A)	(B)	(C)	(D)	(E)	(F)	I	R
1	1	119265-21700	CRANKSHAFT ASSY	1	1						
2	2	129100-01580	PIN, M8X16	1	1						
5	2	119260-21200	GEAR, CRANKSHAFT	1	1						
6	2	22512-040120	KEY, 4X 12	1	1						
8	1	119233-21680	V-PULLEY	1							
8-1	1	119233-21681	V-PULLEY	1	1						R
	(A=E64121)										
9	1	119621-21680	BOLT, FLANGE 12X1.25	1	1						
10	1	119620-21941	WASHER	1	1						
11	1	121111-21501	BOLT, FLYWHEEL	5	5						
12	1	119233-21580	FLYWHEEL ASSY	1	1						
15	2	119865-21600	GEAR, RING	1	1						
16	1	119265-22601	PISTON ASSY	3	3						
18	2	119265-22500	RING SET, PISTON	3	3						
24	1	119265-22300	PIN, PISTON	3	3						
25	1	22252-000200	RING, 20	6	6						
26	1	119265-23100	ROD ASSY, CONNECTING	3	3						
30	2	119260-23910	BEARING, PISTON PIN	3	3						1
31	2	119265-23200	BOLT, CONNECTING ROD	6	6						
32	2	719260-23600	BEARING, CRANK PIN	3	3						
34	1	22351-030010	PIN, SPRING 3.0X10	1	1						
35	1	719260-23610	BEARING ASSY, 0.25	3	3						2
37	1	119265-22930	PISTON ASSY, 0.25 OS	3	3						3
39	2	119265-22950	RING SET, 0.25 OS	3	3						3

Remarks
(1) REPAIR PART.
(2) UNDER-SIZE(U.S=0.25)PART.
(3) OVER-SIZE(O.S=0.25)PART.

N:Old $\frac{\text{Yes}}{\text{No}}$ New. Q:Old $\frac{\text{No}}{\text{Yes}}$ New. R:Old $\frac{\text{Yes}}{\text{Yes}}$ New. S:Old $\frac{\text{No}}{\text{No}}$ New. W:Add. Z:Discontinued. F:Interchangeable by set. K:Q'ty Change

Copyright (C) YANMAR CO., LTD. All RightsReserved.

Fig.9. LUB.OIL SYSTEM

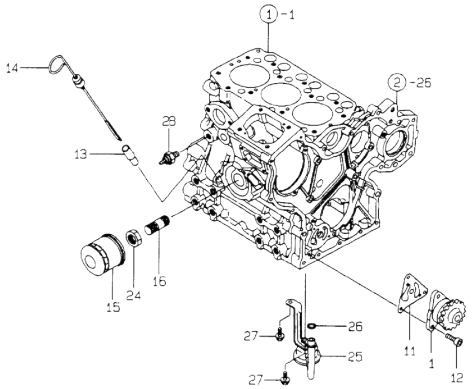

(A)=3TNE68-TB1
(B)=3TNE68-ETB1
(C)=
(D)=
(E)=
(F)=

No.	Lev.	Parts No.	Description	Q'ty (A)	(B)	(C)	(D)	(E)	(F)	I	R
1	1	119260-32000	PUMP ASSY, OIL	1	1						
11	1	119660-32020	GASKET, PUMP	1	1						
12	1	26450-060202	BOLT, M6X 20	3	3						
13	1	121520-34810	GUIDE, DIPSTICK	1	1						
14	1	129132-34800	DIPSTICK, OIL	1	1						
15	1	119305-35150	FILTER, OIL	1	1						
16	1	119225-35300	VALVE ASSY	1	1						
24	1	129150-35350	NUT	1	1						
25	1	119260-35081	PIPE, OIL INLET	1	1						
26	1	119209-35030	O-RING, P11	1	1						
27	1	26106-060122	BOLT, M6X 12 PLATED	2	2						
28	1	124160-39451	SWITCH	1							
28-1	1	114250-39450	SWITCH, 0.5KG	1	1					N	
	(A=E65092)										

N:Old ◄Yes/No► New. Q:Old ◄No/Yes► New. R:Old ◄Yes/Yes► New. S:Old ◄No/No► New. W:Add. Z:Discontinued. F:Interchangeable by set. K:Q'ty Change

Copyright (C) YANMAR CO., LTD. All RightsReserved.

Fig.10. COOLING WATER SYSTEM

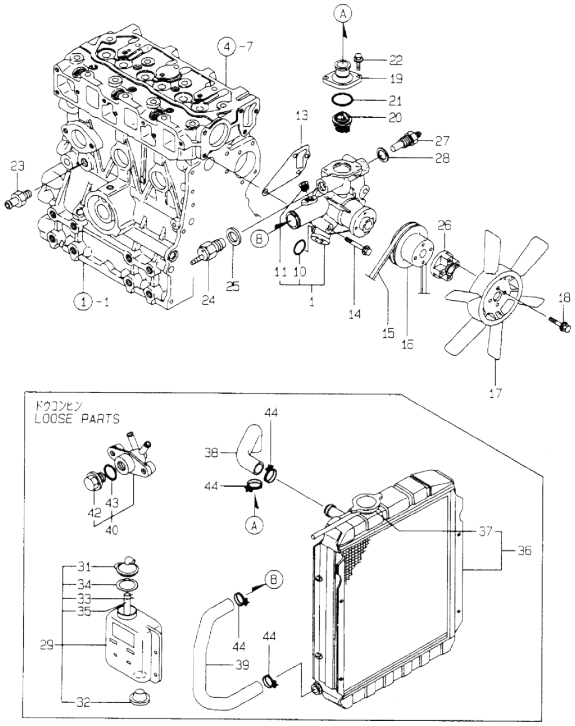

(A)=3TNE68-TB1
(B)=3TNE68-ETB1
(C)=
(D)=
(E)=
(F)=

No.	Lev.	Parts No.	Description	Q'ty (A)	(B)	(C)	(D)	(E)	(F)	I	R
1	1	119244-42001	PUMP ASSY, WATER	1	1						
10	2	119225-42320	O-RING	1	1						
11	2	23871-030000	PLUG, R03	1							
11-1	2	23876-030000	PLUG, R03	1	1					N	
	(A=EXXX)										
13	1	119260-42020	GASKET, WATER PUMP	1							
13-1	1	119260-42021	GASKET, WATER PUMP	1	1					N	
	(A=E65286)										
14	1	26106-080452	BOLT, M8X 45 PLATED	3	3						
15	1	119620-42291	V-BELT, FM34.5	1	1						
16	1	119620-42350	V-PULLEY	1	1						
17	1	124251-44740	PLATE	1	1						
18	1	26014-060352	BOLT, M6X 35	4	4						
19	1	119260-49530	COVER, THERMOSTAT	1	1						
20	1	119260-49800	THERMOSTAT, 71	1	1						
21	1	24321-000350	O-RING, 1AG35.0	1							
21-1	1	119209-42140	O-RING, G 35	1	1					N	
	(A=E65286)										
22	1	26106-060182	BOLT, M6X 18 PLATED	2	2						
23	1	121550-49111	JOINT, PT1/4	1	1						
24	1	121250-44901	SWITCH, 110	1	1						
25	1	124465-44950	GASKET, 16	1	1						
26	1	171353-44760	SPACER, FAN	1	1						
27	1	119266-49350	SWITCH	1	1						
28	1	129150-49360	GASKET	1	1						
29	1	121468-44510	TANK ASSY	1	1						
31	2	121450-44531	CAP	1	1						
32	2	121468-44540	PLUG	1	1						
33	2	124450-44560	RETAINER	1	1						
34	2	121470-44581	GASKET	1	1						
35	2	23065-070130	PIPE, 7X 130	1	1						
36	1	119632-44520	RADIATOR ASSY	1	1						
36A	2	X2411282340	SHROUD	1	1						
37	2	129107-44590	CAP, RADIATOR	1	1						
38	1	119688-49010	PIPE, WATER	1	1						
39	1	119632-49020	PIPE, WATER	1	1						
40	1	121450-49110	COCK ASSY, 3-WAY	1	1						
42	2	121250-49121	PLUG, DRAIN	1	1						
43	2	24311-000160	O-RING, 1AP16.0	1	1						
44	1	23010-038000	CLAMP, 38	4	4						

N:Old ←Yes/No→ New. Q:Old ←No/Yes→ New. R:Old ←Yes/Yes→ New. S:Old ←No/No→ New. W:Add. Z:Discontinued. F:Interchangeable by set. K:Q'ty Change

Copyright (C) YANMAR CO., LTD. All RightsReserved.

Fig.11. FUEL INJECTION PUMP

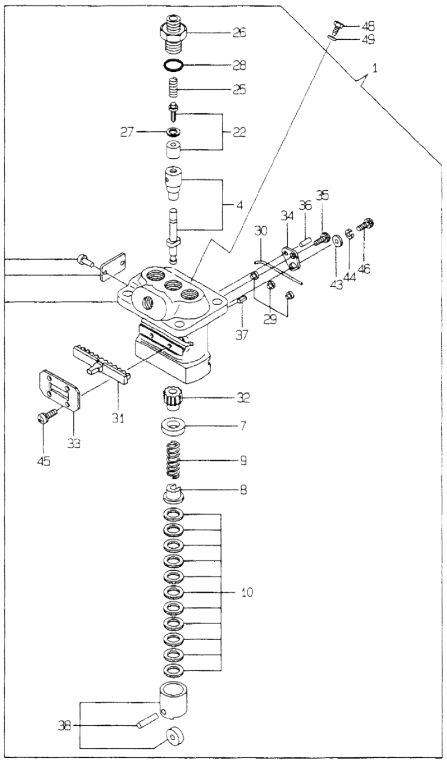

(A)=3TNE68-TB1
(B)=3TNE68-ETB1
(C)=
(D)=
(E)=
(F)=

No.	Lev.	Parts No.	Description	Q'ty (A)	(B)	(C)	(D)	(E)	(F)	I	R
1	1	719225-51100	PUMP ASSY, INJECTION	1							
1-1	1	719266-51100	PUMP ASSY, INJECTION	1	1					N	
	(A=E65286)										
4	2	119225-51100	PLUNGER ASSY	3	3						
7	2	119620-51170	RETAINER, SPRING A	3	3						
8	2	119620-51180	RETAINER, SPRING B	3	3						
9	2	119620-51190	SPRING, PLUNGER	3	3						
10	2	119620-51250	SHIM SET	3	3						
22	2	119225-51300	VALVE ASSY, DELIVERY	3	3						
25	2	105546-51330	SPRING, DELIVERY	3	3						
26	2	119620-51340	HOLDER, DELIVERY	3	3						
27	2	119620-51350	GASKET	3	3						
28	2	119620-51370	O-RING	3	3						
29	2	119620-51450	PIECE	3	3						
30	2	119620-51461	PIN	1	1						
31	2	119660-51500	RACK, CONTROL	1	1						
32	2	119620-51510	PINION	3	3						
33	2	119660-51530	RETAINER, RACK	1	1						
34	2	119620-51650	PLATE	2	2						
35	2	119620-51660	SCREW	2	2						
36	2	119620-51670	PIN	2	2						
37	2	119620-51680	PIN	1	1						
38	2	119620-51700	TAPPET ASSY	3	3						
43	2	22137-040000	WASHER, 4	2						Z	
	(A=E65286)										
44	2	22217-040000	WASHER, SPRING 4	2						Z	
	(A=E65286)										
45	2	26022-040082	SCREW, M4X 8	4	4						
46	2	26587-040102	SCREW, M4X10	2							
46-1	2	26033-040102	SCREW, M4X10	2	2					R	
	(A=E65286)										
48	1	119266-51900	BOLT	1	1					W	
	(A=E65286)										
49	1	22190-080002	WASHER, SEAL 6	1	1					W	
	(A=E65286)										

N:Old ◄Yes/No► New. Q:Old ◄No/Yes► New. R:Old ◄Yes/Yes► New. S:Old ◄No/No► New. W:Add. Z:Discontinued. F:Interchangeable by set. K:Q'ty Change

Copyright (C) YANMAR CO., LTD. All RightsReserved.

Fig.12. GOVERNOR

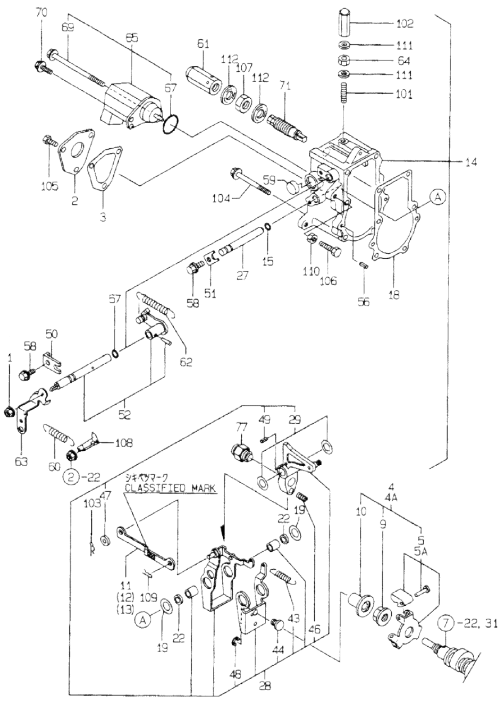

(A)=3TNE68-TB1
(B)=3TNE68-ETB1
(C)=
(D)=
(E)=
(F)=

No.	Lev.	Parts No.	Description	Q'ty (A)	(B)	(C)	(D)	(E)	(F)	I	R
1	1	194990-22050	NUT, M8	1	1						
2	1	119660-61060	COVER, GOVERNOR CASE	1	1						
3	1	119660-61071	GASKET	1	1						
4	1	119600-61100	DRIVE ASSY	1							
4A	1	119600-61300	DRIVE ASSY		1						
5	2	119600-61200	WEIGHT ASSY,GOVERNOR	1							
5A	2	119600-61400	WEIGHT ASSY,GOVERNOR		1						
9	2	119660-61300	NUT	1	1						
10	2	119660-61341	SLEEVE	1	1						
11	1	119660-61121	LINK, NO MARK	1	1						1
12	1	119660-61140	LINK, MARK :2	1	1						1
13	1	119660-61150	LINK, MARK :3	1	1						1
14	1	119632-61200	CASE ASSY, GOVERNOR	1	1						
15	2	129155-51280	O-RING, S6	1	1						
18	2	119660-61052	GASKET	1	1						
19	2	119660-61460	SHIM SET	1	1						
22	2	129155-61480	SPACER ASSY	2	2						
27	2	119660-61491	SHAFT	1							
27-1	2	119660-61590	SHAFT	1	1					N	
	(A=E65286)										
28	2	119232-61510	LEVER ASSY, GOVERNOR	1	1						
29	3	174307-51700	SHIM SET	2	2						
43	3	119232-61540	SPRING	1	1						
44	3	119600-61541	SHIFTER	1	1						
46	3	119660-61651	SPRING, STARTING	1	1						
47	3	22117-040000	WASHER, 4	1	1						
48	3	22272-000040	RING, E- 4	1	1						
49	3	22351-030014	PIN, SPRING 3.0X14	1	1						
50	2	119600-61900	RETAINER, SHAFT	1	1						
51	2	119660-61901	RETAINER, SHAFT	1	1						
52	2	119285-66080	SHAFT ASSY	1	1						
56	2	22351-040010	PIN, SPRING 4.0X10	2	2						
57	2	24341-000070	O-RING, 1AS7.0	1	1						
58	2	26106-060102	BOLT, M6X 10 PLATED	2	2						
59	1	119640-61400	PLUG	1							
60	1	119840-61870	SPRING	1	1						
61	1	26687-120002	NUT, CAP M12	1	1						
62	1	119600-66020	SPRING, REGULATOR	1	1						
63	1	119640-66051	HANDLE, REGULATOR	1	1						
64	1	124550-66370	NUT, M6	1	1						
65	1	119285-66500	STOPPER ASSY	1	1						
67	2	24341-000280	O-RING, 1AS28.0	1	1						
69	2	26106-060952	BOLT, M6X 95 PLATED	1	1						
70	1	121465-59950	BOLT, M6X16	1	1						
71	1	119600-66530	LIMITER ASSY, FUEL	1	1						
77	1	119610-66700	ANGLEICH ASSY	1	1						
101	1	121575-66830	SCREW	1	1						
102	1	119600-66840	NUT, CAP	1	1						
103	1	22360-040000	PIN, SNAP 4	1	1						
104	1	26106-060702	BOLT, M6X 70 PLATED	5	5						
105	1	26116-050102	BOLT, M5X 10 PLATED	3	3						

N:Old ←Yes/No→ New. Q:Old ←No/Yes→ New. R:Old ←Yes/Yes→ New. S:Old ←No/No→ New. W:Add. Z:Discontinued. F:Interchangeable by set. K:Q'ty Change

Remarks
(1) SELECTIVE PARTS : CERTAIN THE CLASSIFICATION MARK, THEN PLACE YOUR ORDER.(REF. TO ILLUSTRATION)

++ CONTINUE ++

Copyright (C) YANMAR CO., LTD. All RightsReserved.

Fig.12. GOVERNOR

(A)=3TNE68-TB1
(B)=3TNE68-ETB1
(C)=
(D)=
(E)=
(F)=

No.	Lev.	Parts No.	Description	Q'ty (A)	(B)	(C)	(D)	(E)	(F)	I	R
106	1	26116-060304	BOLT, M6X 30 PLATED	1	1						
107	1	26776-120002	NUT, LOCK M12	1	1						
108	1	119656-66910	HOOK	1	1						
109	1	22360-060000	PIN, SNAP 6	1	1						
110	1	26756-060002	NUT, LOCK M6	1	1						
111	1	22190-060003	SEAL WASER 6	2	2						
112	1	22190-120002	WASHER, SEAL 12	2	2						

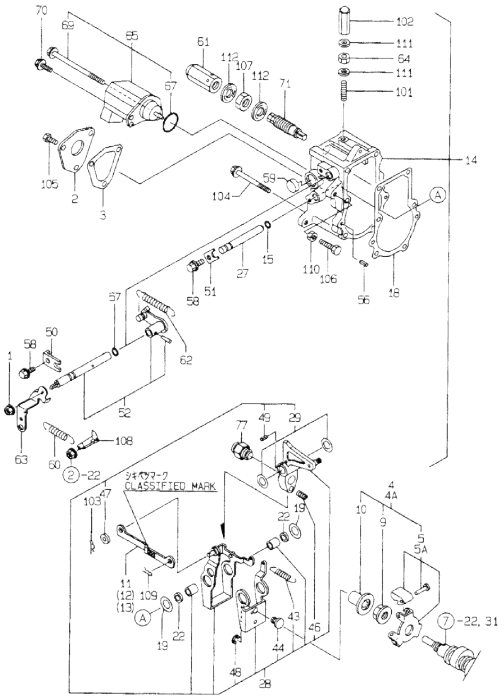

Remarks
(1) SELECTIVE PARTS : CERTAIN THE CLASSIFICATION MARK, THEN PLACE YOUR ORDER.(REF. TO ILLUSTRATION)

N:Old ←Yes/No→ New. Q:Old ←No/Yes→ New. R:Old ←Yes/Yes→ New. S:Old ←No/No→ New. W:Add. Z:Discontinued. F:Interchangeable by set. K:Q'ty Change

Copyright (C) YANMAR CO., LTD. All RightsReserved.

Fig.13. FUEL INJECTION VALVE

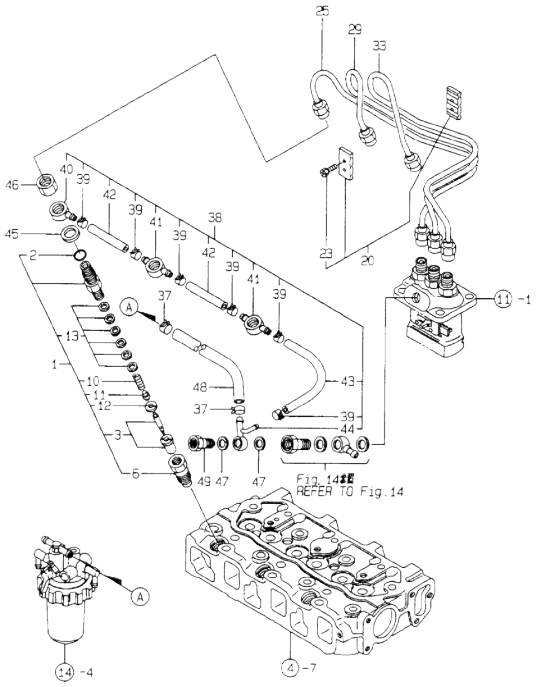

(A)=3TNE68-TB1
(B)=3TNE68-ETB1
(C)=
(D)=
(E)=
(F)=

No.	Lev.	Parts No.	Description	Q'ty (A)	(B)	(C)	(D)	(E)	(F)	I	R
1	1	719255-53100	VALVE ASSY,INJECTION	3	3						
2	2	129155-61830	O-RING, S10	3	3						
3	2	119620-53000	VALVE ASSY,INJECTION	3	3						
6	2	119620-53080	NUT, NOZZLE	3	3						
10	2	119620-53120	SPRING, NOZZLE	3	3						
11	2	114250-53130	SEAT, SPRING	3	3						
12	2	119620-53140	SPACER, VALVE STOP	3	3						
13	2	114250-53400	SHIM SET	3	3						
20	1	129150-59120	RETAINER, PIPE	1	1						
23	2	129150-59131	BOLT, M4X14	2	2						
25	1	119209-59810	PIPE ASSY, INJECTION	1	1						
29	1	119209-59820	PIPE ASSY, INJECTION	1	1						
33	1	119209-59830	PIPE ASSY, INJECTION	1	1						
37	1	124766-59050	CLIP, HOSE 12	2	2						
38	1	119642-59540	PIPE ASSY, RETURN	1	1						
39	2	124066-59100	CLIP, HOSE 8	6	6						
40	2	119260-59520	JOINT	1	1						
41	2	119260-59530	JOINT	2	2						
42	2	105025-59550	PIPE, FUEL RETURN	2	2						
43	2	119642-59550	PIPE, FUEL RETURN	1	1						
44	2	119642-59570	JOINT, OVER FLOW	1	1						
45	1	23414-140000	GASKET, 14X1.0	3							
45-1	1	22190-140002	WASHER, SEAL 14	3	3						N
	(A=E64121)										
46	1	119620-59700	NUT, NOZZLE	3	3						
47	1	23414-080012	GASKET, 8X1.0	2							
47-1	1	22190-080002	WASHER, SEAL 6	2	2						N
	(A=E64121)										
48	1	119225-59560	PIPE, FUEL	1	1						
49	1	124550-59820	BOLT, PIPE JOINT M8	1	1						

N:Old ◄Yes/No► New. Q:Old ◄No/Yes► New. R:Old ◄Yes/Yes► New. S:Old ◄No/No► New. W:Add. Z:Discontinued. F:Interchangeable by set. K:Q'ty Change

Copyright (C) YANMAR CO., LTD. All RightsReserved.

Fig.14. FUEL LINE

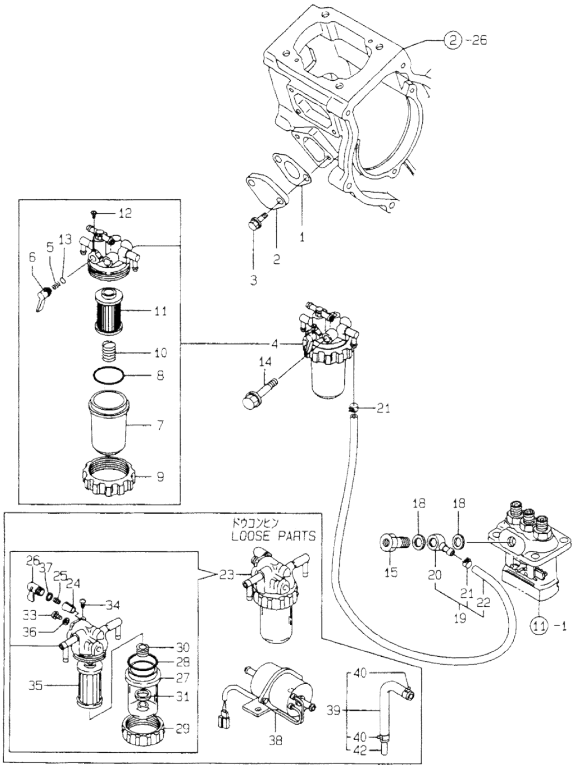

(A)=3TNE68-TB1
(B)=3TNE68-ETB1
(C)=
(D)=
(E)=
(F)=

No.	Lev.	Parts No.	Description	Q'ty (A)	(B)	(C)	(D)	(E)	(F)	I	R
1	1	121520-01851	GASKET	1	1						
2	1	121520-01860	COVER	1	1						
3	1	26106-060162	BOLT, M6X 16 PLATED	2	2						
4	1	119255-55620	FILTER ASSY, FUEL	1	1						
5	2	104200-55330	SPRING, VALVE	1	1						
6	2	119810-55340	LEVER	1	1						
7	2	121254-55510	COVER	1	1						
8	2	102103-55520	O-RING	1	1						
9	2	110250-55610	RING, RETAINING	1	1						
10	2	121250-55620	SPRING	1	1						
11	2	124550-55700	FILTER, FUEL L=90	1	1						
12	2	104200-55750	SCREW, M4	1	1						
13	2	24311-240100	O-RING, 1AP10A	1	1						
14	1	26014-080702	BOLT, M8X 70	1	1						
15	1	119462-59190	BOLT ASSY, JOINT	1	1						
18	1	104200-59170	GASKET, 12	2							
18-1	1	22190-120002	WASHER, SEAL 12	2	2						N
	(A=E64121)										
19	1	119230-59031	PIPE ASSY, FUEL	1	1						
20	2	101304-59020	JOINT, PIPE 12	1	1						
21	2	124766-59050	CLIP, HOSE 12	2	2						
22	2	119230-59080	PIPE, FUEL D12X185	1	1						
23	1	129335-55700	SEPARATOR ASSY,WATER	1	1						
24	2	104200-55321	VALVE, TAPER	1	1						
25	2	104200-55330	SPRING, VALVE	1	1						
26	2	104200-55341	HANDLE	1	1						
27	2	124064-55510	COVER	1	1						
28	2	102103-55520	O-RING	1	1						
29	2	110250-55610	RING, RETAINING	1	1						
30	2	121257-55720	SPRING	1	1						
31	2	121257-55731	FLOAT	1	1						
33	2	101720-55750	PLUG, 6	2	2						
34	2	104200-55750	SCREW, M4	1	1						
35	2	171081-55910	SCREEN	1	1						
36	2	23418-060000	GASKET, 6X1.0	2	2						
37	2	24311-240100	O-RING, 1AP10A	1	1						
38	1	129322-77401	PUMP ASSY, FUEL FEED	1	1						
39	1	119840-59601	BEND	4	4						W
	(A=E60051)										
40	2	124766-59050	CLIP, HOSE 12	8	8						W
	(A=E60051)										
42	2	119840-59621	JOINT	4	4						W
	(A=E60051)										

N:Old ◄Yes/No► New. Q:Old ◄No/Yes► New. R:Old ◄Yes/Yes► New. S:Old ◄No/No► New. W:Add. Z:Discontinued. F:Interchangeable by set. K:Q'ty Change

Copyright (C) YANMAR CO., LTD. All RightsReserved.

Fig.15. STARTING MOTOR

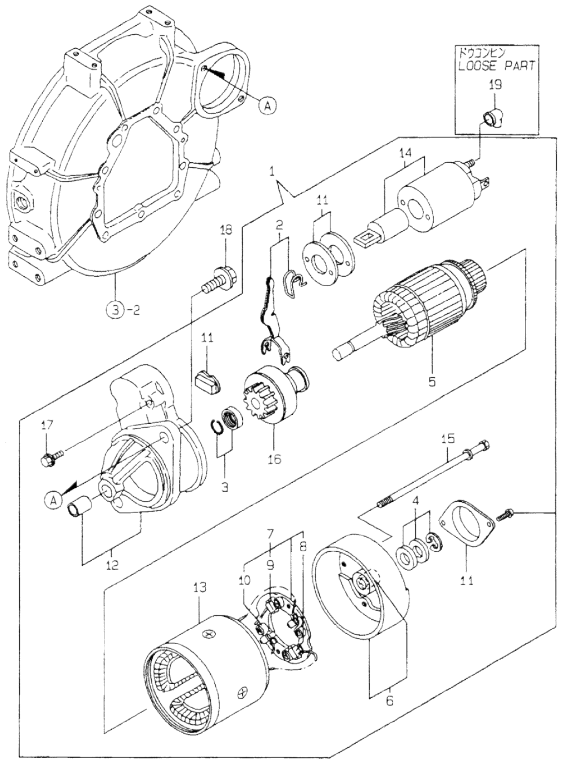

(A)=3TNE68-TB1
(B)=3TNE68-ETB1
(C)=
(D)=
(E)=
(F)=

No.	Lev.	Parts No.	Description	Q'ty (A)	(B)	(C)	(D)	(E)	(F)	I	R
1	1	119631-77011	STARTING MOTOR	1	1						
2	2	114371-77180	LEVER KIT, SHIFT	1	1						
3	2	X2114715500	STOPPER SET	1	1						
4	2	X2114811000	WASHER KIT, THRUST	1	1						
5	2	114371-77110	ARMATURE	1	1						
6	2	114371-77140	COVER ASSY, REAR	1	1						
7	2	114371-77160	HOLDER ASSY, BRUSH	1	1						
8	3	114371-79040	BRUSH	2	2						
9	3	114371-79050	BRUSH	1	1						
10	3	114371-79060	SPRING	4	4						
11	2	114371-77170	COVER ASSY, DUST	1	1						
12	2	119631-77651	CASE ASSY, GEAR	1	1						
13	2	124097-77710	YOKE ASSY	1	1						
14	2	X2114275010	SWITCH ASSY	1							
14-1	2	124298-77020	SWITCH, MAGNETIC	1	1					N	
	(A=E65286)										
15	2	124195-77770	BOLT, THROUGH	2	2						
16	2	119631-77780	PINION ASSY	1	1						
17	2	114371-79070	BOLT	2	2						
18	1	26116-120252	BOLT, M12X 25 PLATED	2	2						
19	1	124160-77020	COVER, TERMINAL	1	1						

N:Old ◄Yes/No► New. Q:Old ◄No/Yes► New. R:Old ◄Yes/Yes► New. S:Old ◄No/No► New. W:Add. Z:Discontinued. F:Interchangeable by set. K:Q'ty Change

Copyright (C) YANMAR CO., LTD. All RightsReserved.

Fig.16. GENERATOR

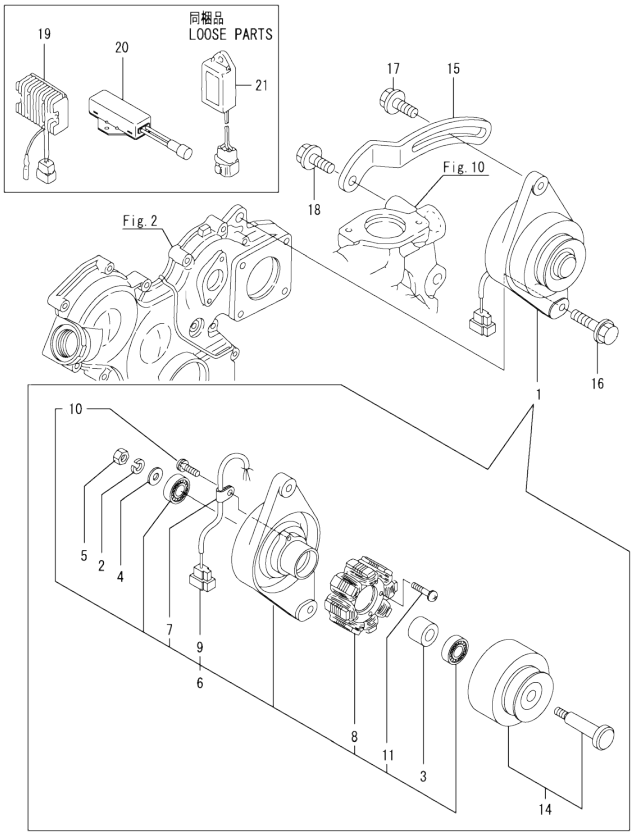

(A)=3TNE68-TB1
(B)=3TNE68-ETB1
(C)=
(D)=
(E)=
(F)=

No.	Lev.	Parts No.	Description	Q'ty (A)	(B)	(C)	(D)	(E)	(F)	I	R
1	1	129150-77202	GENERATOR	1	1						
1-1	1	129150-77203	DINAMO ASSY	1	1					N	
	(A=EXXXXX)	(B=ED3788)									
2	2	XM219230000	WASHER, SPRING	1	1						
3	2	XM329830000	COLLAR	1	1						
4	2	XM860250000	WASHER, 10	1	1						
5	2	XM863720000	NUT	1	1						
6	2	129150-77210	PLATE ASSY	1	1						
7	3	XM069000000	CLAMP	1	1						
8	3	XM081780000	STATOR	1	1						
9	3	XM178780000	COUPLER	1	1						
10	3	XYSPS400800	SCREW	1	1						
11	3	XYSPS402400	SCREW	2	2						
14	2	129150-77230	FLYWHEEL ASSY	1	1						
14-1	2	129150-77280	FLYWHEEL ASSY	1	1					N	
	(A=EXXXXX)	(B=ED3788)									
15	1	119232-77330	ADJUSTER	1	1						
16	1	26106-100402	BOLT, M10X 40 PLATED	1	1						
17	1	26014-080252	BOLT, M8X 25	1	1						
18	1	26106-080202	BOLT, M8X 20 PLATED	1	1						
19	1	119653-77710	CURRENT LIMITER	1	1						
20	1	129155-77810	REGISTER	1	1						
21	1	119632-77920	TIMER	1	1						

N:Old ←Yes/No→ New. Q:Old ←No/Yes→ New. R:Old ←Yes/Yes→ New. S:Old ←No/No→ New. W:Add. Z:Discontinued. F:Interchangeable by set. K:Q'ty Change

Copyright (C) YANMAR CO., LTD. All RightsReserved.

Fig.17. GASKET SET

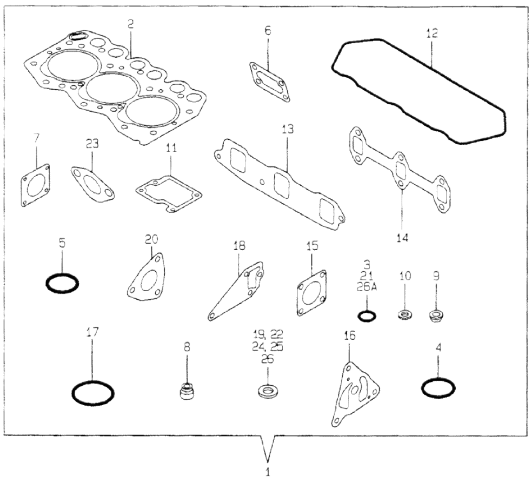

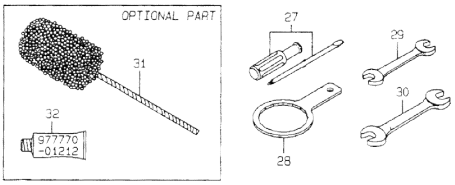

(A)=3TNE68-TB1
(B)=3TNE68-ETB1
(C)=
(D)=
(E)=
(F)=

No.	Lev.	Parts No.	Description	Q'ty (A)	(B)	(C)	(D)	(E)	(F)	I	R
1	1	719260-92600	GASKET SET	1							1
1-1	1	719260-92601	GASKET SET	1	1					N	1
	(A=EXXX)										
2	2	119265-01341	GASKET, HEAD	1	1						
3	2	24311-000120	O-RING, 1AP12.0	4							
3-1	2	24311-000120	O-RING, 1AP12.0	2	2					K	
	(A=FROM 1ST)										
4	2	24311-000320	O-RING, 1AP32.0	2	2						
5	2	24341-000240	O-RING, 1AS24.0	1	1						
6	2	119660-01562	GASKET	1	1						
7	2	124240-01883	GASKET	1	1						
8	2	119260-11340	SEAL, VALVE STEM	6	6						
9	2	119600-11450	PROTECTOR, NOZZLE	3	3						
10	2	119600-11460	GASKET, NOZZLE	6	6						
11	2	119260-03031	GASKET	1	1						
12	2	119260-11310	GASKET, BONNET	1	1						
13	2	119270-12110	GASKET, MANIFOLD	1	1						
14	2	119260-13110	GASKET	1	1						
15	2	124701-11911	GASKET, SILENCER	2	2						
16	2	119660-32020	GASKET, PUMP	1	1						
17	2	24321-000350	O-RING, 1AG35.0	1							
17-1	2	119209-42140	O-RING, G 35	1	1					N	
	(A=E65286)										
18	2	119260-42020	GASKET, WATER PUMP	1							
18-1	2	119260-42021	GASKET, WATER PUMP	1	1					N	
	(A=E65286)										
19	2	124465-44950	GASKET, 16	1	1						
20	2	103954-13201	GASKET, SILENCER	1	1						
21	2	119209-35030	O-RING, P11	1	1						
22	2	23414-140000	GASKET, 14X1.0	3							
22-1	2	22190-140002	WASHER, SEAL 14	3	3					N	
	(A=E64121)										
23	2	121520-01851	GASKET	1	1						
24	2	104200-59170	GASKET, 12	2							
24-1	2	22190-120002	WASHER, SEAL 12	2	2					N	
	(A=E64121)										
25	2	23414-080012	GASKET, 8X1.0	2							
25-1	2	22190-080002	WASHER, SEAL 6	2	2					N	
	(A=E64121)										
26	2	129150-49360	GASKET	1	1						
26A	2	119624-32040	O-RING, P12.0	2	2					W	
	(A=FROM 1ST)										
27	1	104200-92350	DRIVER, SCREW	1	1						
28	1	119332-92751	WRENCH, FILTER 68	1	1						
29	1	28110-100120	SPANNER, 10X12	1	1						
30	1	28110-140170	SPANNER, 14X17	1	1						
31	1	129400-92400	HONE	1	1						1
32	1	977770-01212	GASKET, LIQUID	1	1						1

Remarks
(1) OPTIONAL PART.

N:Old ←Yes/No→ New. Q:Old ←No/Yes→ New. R:Old ←Yes/Yes→ New. S:Old ←No/No→ New. W:Add. Z:Discontinued. F:Interchangeable by set. K:Q'ty Change

Copyright (C) YANMAR CO., LTD. All RightsReserved.

Parts No. Index

Parts No.	Fig. No.	Ref. No.
101304-59020	14	20
101720-55750	14	33
102103-55520	14	8
		28
103954-13201	6	10
	17	20
104200-55321	14	24
104200-55330	14	5
		25
104200-55341	14	26
104200-55750	14	12
		34
104200-59170	14	18
	17	24
104200-92350	17	27
105010-11230	4	36
		40
105025-59550	13	42
105027-12540	5	8
105027-12570	5	7
105546-51330	11	25
110250-55610	14	9
		29
114250-11120	4	19
114250-11180	4	20
114250-39450	9	28 -1
114250-53130	13	11
114250-53400	13	13
114371-77110	15	5
114371-77140	15	6
114371-77160	15	7
114371-77170	15	11
114371-77180	15	2
114371-79040	15	8
114371-79050	15	9
114371-79060	15	10
114371-79070	15	17
118400-03060	4	55
119131-18320	6	5
119209-35030	9	26
	17	21
119209-42140	10	21 -1
	17	17 -1
119209-59810	13	25
119209-59820	13	29
119209-59830	13	33
119225-14200	7	22
119225-14210	7	31
119225-35300	9	16
119225-42320	10	10

Parts No.	Fig. No.	Ref. No.
119225-51100	11	4
119225-51300	11	22
119225-59560	13	48
119230-59031	14	19
119230-59080	14	22
119232-13500	6	8
119232-61510	12	28
119232-61540	12	43
119232-77330	16	15
119233-12210	5	10
119233-12610	5	11
119233-21580	8	12
119233-21680	8	8
119233-21681	8	8 -1
119244-42001	10	1
119254-12500	5	5
119255-55620	14	4
119260-01510	2	29
119260-01770	3	13
119260-02020	1	6
119260-03020	4	50
119260-03031	4	51
	17	11
119260-07900	4	4
119260-11100	4	17
119260-11110	4	18
119260-11200	4	27
119260-11240	4	28
119260-11260	4	31
119260-11270	4	33
119260-11280	4	34
119260-11310	4	54
	17	12
119260-11330	4	48
119260-11331	4	48 -1
119260-11340	4	23
	17	8
119260-11370	4	24
119260-11800	4	11
119260-13100	6	1
119260-13110	6	2
	17	14
119260-14100	7	7
119260-14200	7	1
119260-14400	7	2
119260-14580	7	3
119260-21200	8	5
119260-23910	8	30
119260-25100	7	11
119260-32000	9	1

Parts No.	Fig. No.	Ref. No.
119260-35081	9	25
119260-42020	10	13
	17	18
119260-42021	10	13 -1
	17	18 -1
119260-49530	10	19
119260-49800	10	20
119260-59520	13	40
119260-59530	13	41
119263-01490	2	26
119263-01590	2	1
119263-26001	7	17
119265-01250	1	12 -1
119265-01341	1	24
	17	2
119265-11260	4	32
119265-11700	4	7
119265-21700	8	1
119265-22300	8	24
119265-22500	8	18
119265-22601	8	16
119265-22930	8	37
119265-22950	8	39
119265-23100	8	26
119265-23200	8	31
119266-01200	1	23
119266-02410	1	16
119266-12580	5	12
119266-13580	6	7
119266-49350	10	27
119266-51900	11	48
119270-12100	5	1
119270-12110	5	2
	17	13
119275-12101	5	1 -1
119285-66080	12	52
119285-66500	12	65
119305-35150	9	15
119332-92751	17	28
119454-01721	3	11
119462-26010	2	10
119462-59190	14	15
119600-01600	3	2
119600-11450	4	25
	17	9
119600-11460	4	26
	17	10
119600-61100	12	4
119600-61200	12	5
119600-61300	12	4 A

Parts No.	Fig. No.	Ref. No.
119600-61400	12	5 A
119600-61541	12	44
119600-61900	12	50
119600-66020	12	62
119600-66530	12	71
119600-66840	12	102
119610-66700	12	77
119620-01620	3	6
119620-01750	3	4
119620-01800	2	4
119620-02450	7	4
119620-11350	4	44
119620-21941	8	10
119620-25912	7	13
119620-42291	10	15
119620-42350	10	16
119620-51170	11	7
119620-51180	11	8
119620-51190	11	9
119620-51250	11	10
119620-51340	11	26
119620-51350	11	27
119620-51370	11	28
119620-51450	11	29
119620-51461	11	30
119620-51510	11	32
119620-51650	11	34
119620-51660	11	35
119620-51670	11	36
119620-51680	11	37
119620-51700	11	38
119620-53000	13	3
119620-53080	13	6
119620-53120	13	10
119620-53140	13	12
119620-59700	13	46
119620-77820	4	60
119621-21680	8	9
119623-01950	2	35
119624-32040	2	12 -1
	17	26 A
119631-77011	15	1
119631-77651	15	12
119631-77780	15	16
119632-44520	10	36
119632-49020	10	39
119632-61200	12	14
119632-77920	16	21
119640-61400	12	59
119640-66051	12	63

Parts No. Index

Parts No.	Fig. No.	Ref. No.
119642-59540	13	38
119642-59550	13	43
119642-59570	13	44
119653-77710	16	19
119655-12560	5	6
119656-66910	12	108
119660-01551	2	32
119660-01562	2	33
	17	6
119660-01570	2	34
119660-01640	3	7
119660-01821	7	21
119660-01911	2	7
119660-25022	7	9
119660-25052	7	10
119660-25920	7	35
119660-25930	7	36
119660-32020	9	11
	17	16
119660-51500	11	31
119660-51530	11	33
119660-61052	12	18
119660-61060	12	2
119660-61071	12	3
119660-61121	12	11
119660-61140	12	12
119660-61150	12	13
119660-61300	12	9
119660-61341	12	10
119660-61460	12	19
119660-61491	12	27
119660-61590	12	27 -1
119660-61651	12	46
119660-61901	12	51
119688-49010	10	38
119810-55340	14	6
119840-59601	14	39
119840-59621	14	42
119840-61870	12	60
119865-12600	5	13
119865-21600	8	15
121023-01550	2	23
121111-21501	8	11
121120-01620	3	3
121250-44901	10	24
121250-49121	10	42
121250-55620	14	10
121254-55510	14	7
121257-55720	14	30
121257-55731	14	31

Parts No.	Fig. No.	Ref. No.
121400-01640	3	14
121450-01560	2	5
		30
121450-44531	10	31
121450-49110	10	40
121465-59950	12	70
121468-44510	10	29
121468-44540	10	32
121470-44581	10	34
121520-01851	14	1
	17	23
121520-01860	14	2
121520-34810	9	13
121550-49111	10	23
121575-66830	12	101
124060-01050	1	5
124064-55510	14	27
124066-59100	13	39
124085-02220	3	9
124097-77710	15	13
124160-01751	2	42
	4	66
124160-11360	4	47
124160-39451	9	28
124160-77020	15	19
124195-77770	15	15
124240-01883	2	6
	17	7
124251-44740	10	17
124298-77020	15	14 -1
124450-44560	10	33
124465-44950	10	25
	17	19
124550-55700	14	11
124550-59820	13	49
124550-66370	12	64
124701-11911	6	9
	17	15
124766-59050	13	37
	14	21
		40
126650-12680	5	9
129100-01580	3	1
	8	2
129107-44590	10	37
129132-34800	9	14
129150-35350	9	24
129150-49360	10	28
	17	26
129150-59120	13	20

Parts No.	Fig. No.	Ref. No.
129150-59131	13	23
129150-77202	16	1
129150-77203	16	1 -1
129150-77210	16	6
129150-77230	16	14
129150-77280	16	14 -1
129155-51280	12	15
129155-61480	12	22
129155-61830	13	2
129155-77801	4	59
129155-77810	16	20
129322-77401	14	38
129335-55700	14	23
129350-26490	7	19
129400-92400	17	31
171081-55910	14	35
171353-44760	10	26
174307-51700	12	29
194990-22050	2	8
		9
		21
	12	1
22117-040000	12	47
22137-040000	11	43
22137-080000	2	11
22190-060003	12	111
22190-080002	11	49
	13	47 -1
	17	25 -1
22190-120002	12	112
	14	18 -1
	17	24 -1
22190-140002	13	45 -1
	17	22 -1
22217-040000	11	44
22242-000100	4	43
22242-000200	7	15
22252-000200	8	25
22272-000040	12	48
22351-030010	8	34
22351-030014	12	49
22351-040010	2	31
	12	56
22351-060012	4	61
22360-040000	12	103
22360-060000	12	109
22512-040120	7	8
		26
		37
	8	6

Parts No.	Fig. No.	Ref. No.
22857-500100	4	57
23000-054000	5	17
		20
23010-038000	10	44
23065-070130	10	35
23065-120500	4	62
23414-080012	13	47
	17	25
23414-140000	13	45
	17	22
23418-060000	14	36
23871-030000	4	14
	10	11
23876-030000	4	14 -1
	10	11 -1
24101-062034	7	28
24102-063034	7	27
		38
24104-060054	7	20
24311-000120	2	12
	4	58
	17	3
		3 -1
24311-000160	10	43
24311-000180	3	16
24311-000320	2	13
	4	67
	17	4
24311-240100	14	13
		37
24321-000350	10	21
	17	17
24341-000070	12	57
24341-000240	2	24
	17	5
24341-000280	12	67
26014-060352	10	18
26014-080252	16	17
26014-080702	14	14
26022-040082	11	45
26033-040102	11	46 -1
26106-060102	3	17
	12	58
26106-060122	1	25
	5	18
	7	16
	9	27
26106-060162	2	14
		25
	5	3

Parts No. Index

Parts No.	Fig. No.	Ref. No.
26106-060162	7	29
	14	3
26106-060182	10	22
26106-060222	3	10
26106-060282	5	4
26106-060302	2	15
26106-060352	6	3
26106-060402	2	16
26106-060452	3	18
26106-060502	2	17
26106-060652	2	18
26106-060702	12	104
26106-060952	12	69
26106-080142	4	5
		6
	5	19
26106-080202	16	18
26106-080452	4	45
	10	14
26106-080702	2	19
26106-100402	16	16
26116-050102	12	105
26116-060304	12	106
26116-081302	2	20
26116-120252	15	18
26206-100252	3	5
26216-060402	6	4
26366-060002	2	22
	6	6
26366-080002	4	46
26450-060202	9	12
26587-040102	11	46
26587-080102	7	30
26687-120002	12	61
26756-060002	4	38
		42
	12	110
26776-120002	12	107
27221-050080	4	15
27221-060100	1	11
27231-400000	1	12
27241-100000	1	13
27241-250000	1	14
27241-300000	1	15
27241-350000	4	16
28110-100120	17	29
28110-140170	17	30
714250-11570	4	21
719225-51100	11	1
719255-53100	13	1

Parts No.	Fig. No.	Ref. No.
719260-02800	1	17
719260-02870	1	26
719260-02930	1	20
719260-11650	4	35
719260-11660	4	39
719260-23600	8	32
719260-23610	8	35
719260-92600	17	1
719260-92601	17	1 -1
719265-01560	1	1
719266-51100	11	1 -1
977770-01212	2	43
	3	19
	17	32
X2114275010	15	14
X2114715500	15	3
X2114811000	15	4
X2411282340	10	36 A
XM069000000	16	7
XM081780000	16	8
XM178780000	16	9
XM219230000	16	2
XM329830000	16	3
XM860250000	16	4
XM863720000	16	5
XYSPS400800	16	10
XYSPS402400	16	11

Parts No.	Fig. No.	Ref. No.

Parts No.	Fig. No.	Ref. No.