YANMAR

PARTS CATALOG

0CD10-M62900EN

Last update Aug., 2015

PREFACE

1. This Parts Catalog is the 1st edition of 3TNE68-SL Diesel Engine for INASAKA.

Pub. No. : 000Y00D6290
Published : July,1997

2. Model name

Engine model	Vehicle		Vehicle made by
	Products	Model name	
3TNE68-SL	MINI WHEEL LOADER	—	INASAKA

Directions for the Parts Catalog.

1.This Parts Catalog shows both standard and optional parts.
2.Parts may change without prior notice.
3.The following is an example of the Parts Catalog format.

0CF10-G21601 29. FUEL INJECTION PUMP(W/BOOST)

(A)=4JH-DT
(B)=4JH-DTZ
(C)=4JH-DTZP
(D)=4JH-DTZA
(E)=4JH-DTZY
(F)=

① REF.	② LEV.	PARTS NO.	DESCRIPTION	Q'TY (A)	(B)	(C)	(D)	(E)	(F)	③ I	⑤ R
1	1	729595-51390	FUEL INJECTION PUMP	1	1	1	1	1			1
1-1	1	729595-51391	FUEL INJECTION PUMP	1	1	1	1	1		N	1
	(A=E00185)	(B=E00200)									
3	2	26022-060162	SCREW M 6X 16	9	9	9	9	9			
3-1 ④	2	26022-060162	SCREW M 6X 16	4	4	4	4	4		K	
	(A=E00156)	(B=E00156)	(C=E00156) (D=E00156)	(E=E00156)							
4	2	129470-51040	CAMSHAFT	1	1	1	1	1			
5	2	122710-51050	BEARING, ROLLER	2	2	2	2	2			
6	2	129470-51060	RETAINER	1	1	1	1	1			

Remarks
(1) BOOST COMPEMSATOR TYPE. OPTIONAL PART, TO E00155,(4JH-DT, 4JH-DTZ

①Ref. No.

The Ref. No. listed may not be in accordance with the illustration Ref. No.

(Ex.) Illustration No. 1 List Ref No. 1 (Before change) → 1- 1 (After change)

For interchangeable symbols N, R and K, illustrations for new parts may be abbreviated.

②Lev. (Level)

Level indication
The numbers below indicate the level of relativity towards the main part.
1 ----- Main parts (Assembly parts)
2 ----- Sub component included in " 1 ".
3 ----- Sub component included in " 2 ".
Note) Parts that are not for sale are partially illustrated but not listed.

③Interchangeability Symbol

When a part change takes place, one of the following interchangeability symbols is indicated beside the part.

Symbol	Interchangeability	Contents note
N	Old ← Yes / No → New	New Part is interchangeable for Old Part but Old Part is not interchangeable for New Part.
Q	Old ← No / Yes → New	New Part is not interchangeable for Old Part but Old Part is interchangeable for New Part.
R	Old ← Yes / Yes → New	New/ Old Parts are both interchangeable.
S	Old ← No / No → New	New/ Old Parts are both not interchangeable.
W		Part newly added.
Z		Part discontinued.
F		Not interchangeable by a single part but interchangeable together with related parts.
K		Changes only for used parts quantities.

④Effective Machine No.

When a part changes, the effective Machine No. will be indicated in the (A)-(F) column.

Product Symbol	Product No.	Product Symbol	Product No.
C	Clutch No. Compressor No.	F	Machine No. (Agricultural Equip.)
D	Drive No.	M	Machine No.
E	Engine No.		

Note 1) A date may follow the symbol. (Ex.) 1996.01
Note 2) " XXXXX " and " ZZZZZ " are for parts that could not be predicted or for engine models that could not be identified.
Note 3) (A=E00185) is the E (Engine Serial Number) for the column (A) model (in this case 4JH-DT) after the parts design change.

⑤Remarks

Figures or alphabets (symbols) are entered in the remarks column.
The comments (remarks) on parts that are indicated at the bottom of the illustration are the same symbols as those stated above.

Contents

0CD10-M62900

Fig. No.	Fig. Name
3TNE68-SL	
1.	CYLINDER BLOCK
2.	GEAR HOUSING
3.	FLYWHEEL HOUSING & OIL SUMP
4.	CYLINDER HEAD & BONNET
5.	SUCTION MANIFOLD & AIR CLEANER
6.	EXHAUST MANIFOLD & SILENCER
7.	CAMSHAFT & DRIVING GEAR
8.	CRANKSHAFT & PISTON
9.	LUB. OIL SYSTEM
10.	COOLING WATER SYSTEM
11.	FUEL INJECTION PUMP
12.	GOVERNOR
13.	FUEL INJECTION VALVE
14.	FUEL LINE
15.	STARTING MOTOR
16.	GENERATOR
17.	ELECTRIC PARTS
18.	GASKET SET

Fig. No.	Fig. Name

Fig.1. CYLINDER BLOCK

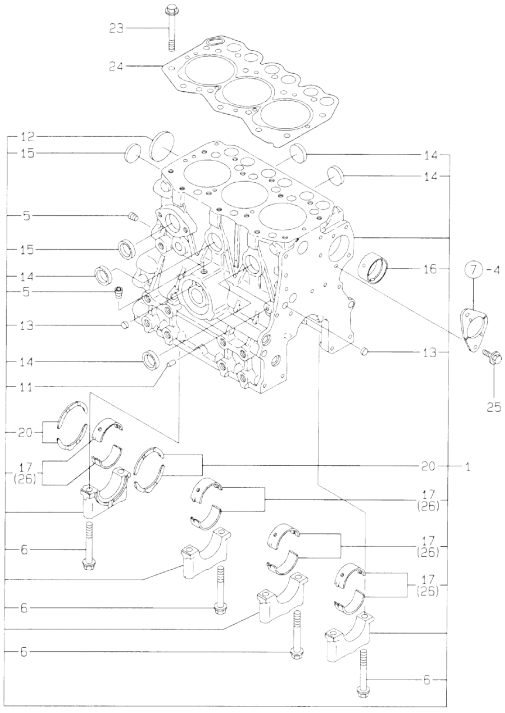

(A)=3TNE68-SL
(B)=
(C)=
(D)=
(E)=
(F)=

No.	Lev.	Parts No.	Description	Q'ty (A)	(B)	(C)	(D)	(E)	(F)	I	R
1	1	719265-01560	BLOCK ASSY, CYLINDER	1							
5	2	124060-01050	PLUG, PT1/8	2							
6	2	119260-02020	BOLT, METAL CAP	8							
11	2	27221-060100	PLUG, 6X10	1							
12	2	27231-400000	PLUG 40	1							
13	2	27241-100000	PLUG, 10	2							
14	2	27241-250000	PLUG, 25	4							
15	2	27241-300000	PLUG 30	2							
16	2	119266-02410	BUSH	1							
17	2	719260-02800	BEARING, MAIN	4							
20	2	719260-02930	BEARING, THRUST	2							
23	1	119260-01200	BOLT, HEAD	14							
24	1	119265-01341	GASKET, HEAD	1							
25	1	26106-060122	BOLT, M6X 12 PLATED	2							
26	1	719260-02870	BEARING, 0.25 US	4						1	

Remarks
(1) UNDER-SIZE(U.S=0.25)PART.

N:Old ←Yes/No→ New. Q:Old ←No/Yes→ New, R:Old ←Yes/Yes→ New. S:Old ←No/No→ New. W:Add. Z:Discontinued. F:Interchangeable by set. K:Q'ty Change

Copyright (C) YANMAR CO., LTD. All RightsReserved.

Fig.2. GEAR HOUSING

(A)=3TNE68-SL
(B)=
(C)=
(D)=
(E)=
(F)=

No.	Lev.	Parts No.	Description	Q'ty (A)	(B)	(C)	(D)	(E)	(F)	I	R
1	1	119260-01590	COVER ASSY,GEAR CASE	1							
4	2	119620-01800	SEAL, OIL	1							
5	1	119660-01911	PIPE, KNOCK	4							
6	1	24311-000120	O-RING, 1AP12.0	2							
7	1	26106-060162	BOLT, M6X 16 PLATED	5							
8	1	26106-060302	BOLT, M6X 30 PLATED	5							
9	1	26106-060402	BOLT, M6X 40 PLATED	3							
10	1	26106-060502	BOLT, M6X 50 PLATED	4							
11	1	26106-060652	BOLT, M6X 65 PLATED	6							
12	1	124160-01751	COVER, FILLER	1							
13	1	24311-000320	O-RING, 1AP32.0	1							
14	1	119260-01490	CASE ASSY, GEAR	1							
17	2	119260-01510	PLUG	1							
18	2	121450-01560	STUD, M8X22	4							
19	2	22351-040010	PIN, SPRING 4.0X10	2							
20	1	119660-01551	COVER	1							
21	1	119660-01562	GASKET	1							
22	1	119660-01570	STUD, M6X12	4							
23	1	119623-01950	SHIM SET, ADJUSTING	1							
30	1	194990-22050	NUT, M8	4							
31	1	26366-060002	NUT, M6	4							
32	1	121023-01550	COVER	1							
33	1	24341-000240	O-RING, 1AS24.0	1							
34	1	26106-060182	BOLT, M6X 18 PLATED	2							
35	1	977770-01212	GASKET, LIQUID	1							1

Remarks
(1) OPTIONAL PART.

N:Old $\frac{\text{Yes}}{\text{No}}$ New. Q:Old $\frac{\text{No}}{\text{Yes}}$ New. R:Old $\frac{\text{Yes}}{\text{Yes}}$ New. S:Old $\frac{\text{No}}{\text{No}}$ New. W:Add. Z:Discontinued. F:Interchangeable by set. K:Q'ty Change

Copyright (C) YANMAR CO., LTD. All RightsReserved.

Fig.3. FLYWHEEL HOUSING & OIL SUMP

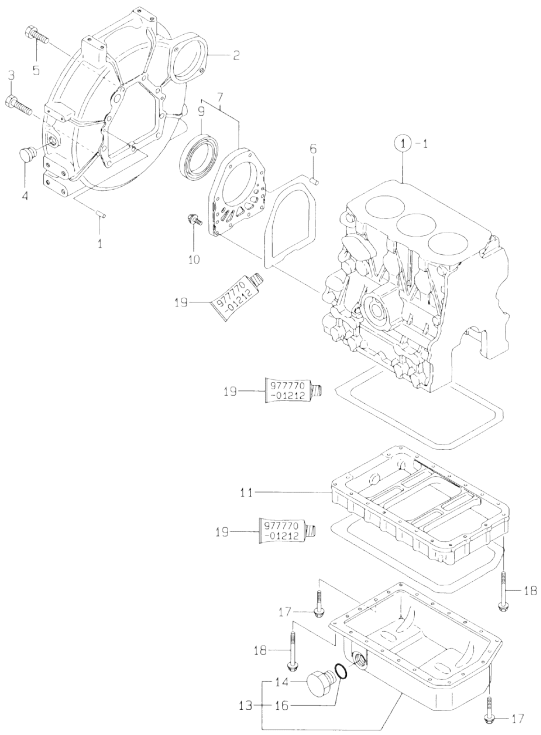

(A)=3TNE68-SL
(B)=
(C)=
(D)=
(E)=
(F)=

No.	Lev.	Parts No.	Description	Q'ty (A)	(B)	(C)	(D)	(E)	(F)	I	R
1	1	129100-01580	PIN, M8X16	2							
2	1	119260-01600	HOUSING, FLYWHEEL	1							
3	1	121120-01620	BOLT, M10X28	3							
4	1	119620-01750	CAP	1							
5	1	26206-100252	BOLT, M10X 25 PLATED	6							
6	1	119620-01620	PIN, M6X10	2							
7	1	119660-01640	CASE ASSY, OIL SEAL	1							
9	2	124085-02220	SEAL, OIL	1							
10	1	26106-060222	BOLT, M6X 22 PLATED	10							
11	1	119454-01721	SPACER, OIL SUMP	1							
13	1	119233-01770	SUMP ASSY, OIL	1							
14	2	121400-01640	PLUG, 16	1							
16	2	24311-000180	O-RING, 1AP18.0	1							
17	1	26106-060102	BOLT, M6X 10 PLATED	3							
18	1	26106-060452	BOLT, M6X 45 PLATED	20							
19	1	977770-01212	GASKET, LIQUID	1							1

Remarks
(1) OPTIONAL PART.

N:Old $\frac{\text{Yes}}{\text{No}}$ New. Q:Old $\frac{\text{No}}{\text{Yes}}$ New. R:Old $\frac{\text{Yes}}{\text{Yes}}$ New. S:Old $\frac{\text{No}}{\text{No}}$ New. W:Add. Z:Discontinued. F:Interchangeable by set. K:Q'ty Change

Copyright (C) YANMAR CO., LTD. All RightsReserved.

Fig.4. CYLINDER HEAD & BONNET

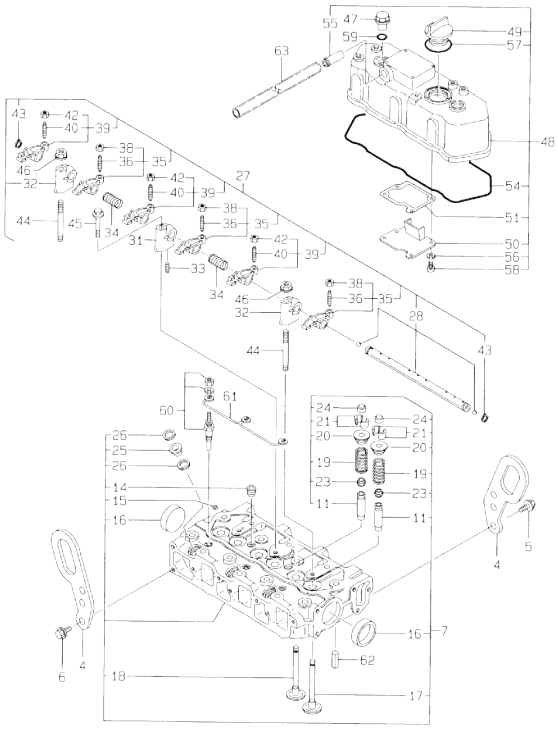

(A)=3TNE68-SL
(B)=
(C)=
(D)=
(E)=
(F)=

No.	Lev.	Parts No.	Description	Q'ty (A)	(B)	(C)	(D)	(E)	(F)	I	R
4	1	119260-07900	LIFTER	2							
5	1	26106-080142	BOLT, M8X 14 PLATED	1							
6	1	26106-080142	BOLT, M8X 14 PLATED	2							
7	1	119265-11700	HEAD ASSY, CYLINDER	1							
11	2	119260-11800	GUIDE, VALVE	6							1
14	2	23871-030000	PLUG, R03	2							
15	2	27221-050080	PLUG, 5X 8	1							
16	2	27241-350000	PLUG, 35	2							
17	2	119260-11100	VALVE, INTAKE	3							
18	2	119260-11110	VALVE, EXHAUST	3							
19	2	114250-11120	SPRING, VALVE	6							
20	2	114250-11180	RETAINER, SPRING	6							
21	2	714250-11570	COTTER ASSY	6							
23	2	119260-11340	SEAL, VALVE STEM	6							
24	2	119260-11370	CAP, VALVE	6							
25	2	119600-11450	PROTECTOR, NOZZLE	3							
26	2	119600-11460	GASKET, NOZZLE	6							
27	1	119260-11200	SUPPORT ASSY, ARM	1							
28	2	119260-11240	SHAFT ASSY, ROCKER	1							
31	2	119260-11260	SUPPORT, ROCKER ARM	1							
32	2	119265-11260	SUPPORT, ROCKER ARM	2							
33	2	119260-11270	SCREW	1							
34	2	119260-11280	SPRING	2							
35	2	719260-11650	ARM ASSY, ROCKER	3							
36	3	105010-11230	SCREW, VALVE ADJUST	3							
38	3	26756-060002	NUT, LOCK M6	3							
39	2	719260-11660	ARM ASSY, ROCKER	3							
40	3	105010-11230	SCREW, VALVE ADJUST	3							
42	3	26756-060002	NUT, LOCK M6	3							
43	2	22242-000100	RING, 10	2							
44	1	119620-11350	STUD	2							
45	1	26106-080452	BOLT, M8X 45 PLATED	1							
46	1	26366-080002	NUT, M8	2							
47	1	124160-11360	KNOB	2							
48	1	719260-11520	BONNET ASSY, HEAD	1							
49	2	124160-01751	COVER, FILLER	1							
50	2	119260-03020	PLATE, SHELTER	1							
51	2	119260-03031	GASKET	1							
54	2	119260-11310	GASKET, BONNET	1							
55	2	119620-11390	JOINT	1							
56	2	22217-050000	WASHER, SPRING 5	4							
57	2	24311-000320	O-RING, 1AP32.0	1							
58	2	26557-050102	SCREW, M5X10	4							
59	1	24311-000120	O-RING, 1AP12.0	2							
60	1	129795-77800	PLUG, GLOW	3							
61	1	119645-77820	CONNECTOR, GLOW PLUG	1							
62	1	22351-060012	PIN, SPRING 6.0X12	2							
63	1	23065-120700	PIPE, 12X 700	1							

Remarks
(1) REPAIR PART.

N:Old ←Yes/No→ New. Q:Old ←No/Yes→ New. R:Old ←Yes/Yes→ New. S:Old ←No/No→ New. W:Add. Z:Discontinued. F:Interchangeable by set. K:Q'ty Change

Copyright (C) YANMAR CO., LTD. All RightsReserved.

Fig.5. SUCTION MANIFOLD & AIR CLEANER

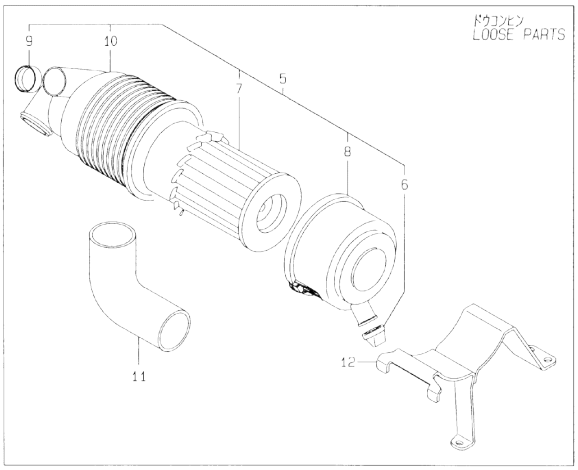

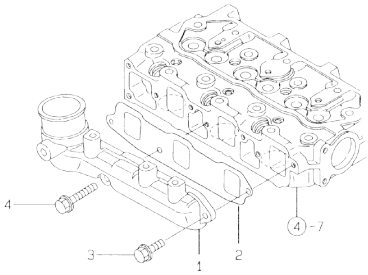

(A)=3TNE68-SL (D)=
(B)= (E)=
(C)= (F)=

No.	Lev.	Parts No.	Description	Q'ty (A)	(B)	(C)	(D)	(E)	(F)	I	R
1	1	119270-12100	MANIFOLD, AIR INTAKE	1							
2	1	119270-12110	GASKET, MANIFOLD	1							
3	1	26106-060162	BOLT, M6X 16 PLATED	2							
4	1	26106-060282	BOLT, M6X 28 PLATED	1							
5	1	119233-12540	CLEANER ASSY, AIR	1							
6	2	119808-12540	VALVE, UNLOADER	1							
7	2	119655-12560	ELEMENT	1							
8	2	105027-12570	COVER, AIR CREANER	1							
9	2	105027-12580	RING	1							
10	2	119233-12670	BODY, AIR CLEANER	1							
11	1	119632-12551	PIPE, AIR INTAKE	1							
12	1	119233-12580	SUPPORT, AIR CLEANER	1							

N:Old ←Yes/No→ New. Q:Old ←No/Yes→ New. R:Old ←Yes/Yes→ New. S:Old ←No/No→ New. W:Add. Z:Discontinued. F:Interchangeable by set. K:Q'ty Change

Copyright (C) YANMAR CO., LTD. All RightsReserved.

Fig.6. EXHAUST MANIFOLD & SILENCER

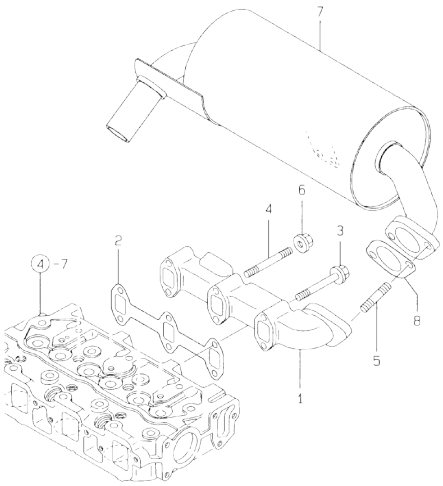

(A)=3TNE68-SL (D)=
(B)= (E)=
(C)= (F)=

No.	Lev.	Parts No.	Description	Q'ty (A)	(B)	(C)	(D)	(E)	(F)	I	R
1	1	119263-13100	MANIFOLD, EXHAUST	1							
2	1	119260-13110	GASKET	1							
3	1	26106-060402	BOLT, M6X 40 PLATED	4							
4	1	26216-060402	STUD, M6X 40	2							
5	1	26216-080222	STUD, M8X 22	2							
6	1	26366-060002	NUT, M6	2							
7	1	119233-13560	SILENCER	1							
8	1	119263-13540	GASKET, SILENCER	2							

N:Old ◄Yes/No► New. Q:Old ◄No/Yes► New. R:Old ◄Yes/Yes► New. S:Old ◄No/No► New. W:Add. Z:Discontinued. F:Interchangeable by set. K:Q'ty Change

Copyright (C) YANMAR CO., LTD. All RightsReserved.

Fig.7. CAMSHAFT & DRIVING GEAR

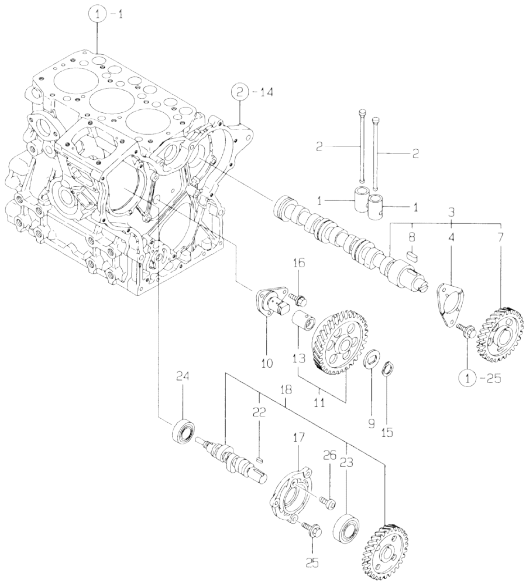

(A)=3TNE68-SL
(B)=
(C)=
(D)=
(E)=
(F)=

No.	Lev.	Parts No.	Description	Q'ty (A)	(B)	(C)	(D)	(E)	(F)	I	R
1	1	119260-14200	TAPPET	6							
2	1	119260-14400	ROD, PUSH	6							
3	1	119260-14580	CAMSHAFT ASSY	1							
4	2	119620-02450	BEARING, THRUST	1							
7	2	119260-14100	GEAR, CAMSHAFT	1							
8	2	22512-040120	KEY, 4X 12	1							
9	1	119660-25022	RETAINER	1							
10	1	119660-25052	SHAFT, IDLE	1							
11	1	119260-25100	GEAR ASSY, IDLE	1							
13	2	119620-25912	BUSH	1							1
15	1	22242-000200	RING, 20	1							
16	1	26106-060122	BOLT, M6X 12 PLATED	3							
17	1	119660-01821	BEARING, FUEL CAM	1							
18	1	119225-14200	CAM ASSY	1							
22	2	22512-040120	KEY, 4X 12	1							
23	2	24102-063034	BEARING, BALL 6303U	1							
24	1	24101-062034	BEARING, BALL 6203	1							
25	1	26106-060162	BOLT, M6X 16 PLATED	3							
26	1	26587-080102	SCREW, M8X10	1							

Remarks
(1) REPAIR PART.

N:Old $\xleftarrow[\text{No}]{\text{Yes}}$ New. Q:Old $\xleftarrow[\text{Yes}]{\text{No}}$ New. R:Old $\xleftarrow[\text{Yes}]{\text{Yes}}$ New. S:Old $\xleftarrow[\text{No}]{\text{No}}$ New. W:Add. Z:Discontinued. F:Interchangeable by set. K:Q`ty Change

Copyright (C) YANMAR CO., LTD. All RightsReserved.

Fig.8. CRANKSHAFT & PISTON

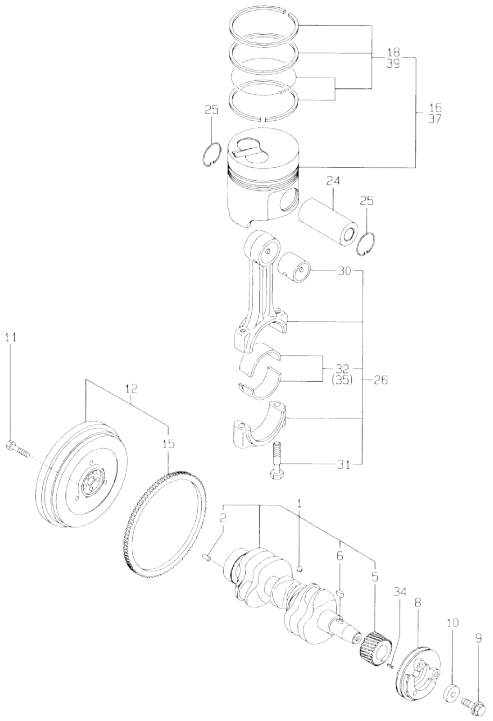

(A)=3TNE68-SL
(B)=
(C)=
(D)=
(E)=
(F)=

No.	Lev.	Parts No.	Description	Q'ty (A)	(B)	(C)	(D)	(E)	(F)	I	R
1	1	119265-21700	CRANKSHAFT ASSY	1							
2	2	129100-01580	PIN, M8X16	1							
5	2	119260-21200	GEAR, CRANKSHAFT	1							
6	2	22512-040120	KEY, 4X 12	1							
8	1	119233-21670	V-PULLEY	1							
9	1	119621-21680	BOLT, FLANGE 12X1.25	1							
10	1	119620-21941	WASHER	1							
11	1	119620-21500	BOLT, FLYWHEEL	5							
12	1	119233-21570	FLYWHEEL ASSY	1							
15	2	124950-21600	GEAR, RING	1							
16	1	119265-22601	PISTON ASSY	3							
18	2	119265-22500	RING SET, PISTON	3							
24	1	119265-22300	PIN, PISTON	3							
25	1	22252-000200	RING, 20	6							
26	1	119265-23100	ROD ASSY, CONNECTING	3							
30	2	119260-23910	BEARING, PISTON PIN	3							1
31	2	119265-23200	BOLT, CONNECTING ROD	6							
32	2	719260-23600	BEARING, CRANK PIN	3							
34	1	22351-030010	PIN, SPRING 3.0X10	1							
35	1	719260-23610	BEARING ASSY, 0.25	3							2
37	1	119265-22930	PISTON ASSY, 0.25 OS	3							3
39	2	119265-22950	RING SET, 0.25 OS	3							3

Remarks
(1) REPAIR PART.
(2) UNDER-SIZE(U.S=0.25)PART.
(3) OVER-SIZE(O.S=0.25)PART.

N:Old ←Yes/No→ New. Q:Old ←No/Yes→ New, R:Old ←Yes/Yes→ New. S:Old ←No/No→ New. W:Add. Z:Discontinued. F:Interchangeable by set. K:Q'ty Change

Copyright (C) YANMAR CO., LTD. All RightsReserved.

Fig.9. LUB. OIL SYSTEM

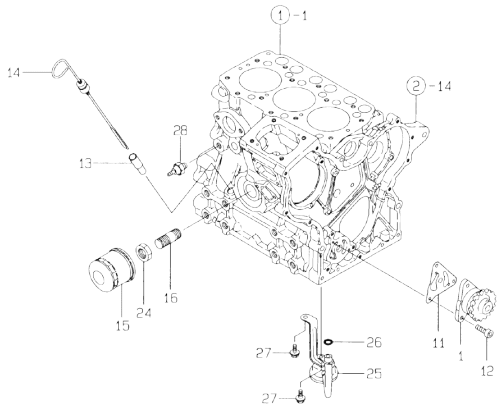

(A)=3TNE68-SL (D)=
(B)= (E)=
(C)= (F)=

No.	Lev.	Parts No.	Description	Q'ty (A)	(B)	(C)	(D)	(E)	(F)	I	R
1	1	119260-32000	PUMP ASSY, OIL	1							
11	1	119660-32020	GASKET, PUMP	1							
12	1	26450-060202	BOLT, M6X 20	3							
13	1	121520-34810	GUIDE, DIPSTICK	1							
14	1	129132-34800	DIPSTICK, OIL	1							
15	1	119305-35150	FILTER, OIL	1							
16	1	119225-35300	VALVE ASSY	1							
24	1	129150-35350	NUT	1							
25	1	119260-35081	PIPE, OIL INLET	1							
26	1	119209-35030	O-RING, P11	1							
27	1	26106-060122	BOLT, M6X 12 PLATED	2							
28	1	124160-39450	SWITCH, 0.5KG	1							

N:Old ◄Yes/No► New. Q:Old ◄No/Yes► New, R:Old ◄Yes/Yes► New, S:Old ◄No/No► New, W:Add, Z:Discontinued, F:Interchangeable by set, K:Q'ty Change

Copyright (C) YANMAR CO., LTD. All RightsReserved.

Fig.10. COOLING WATER SYSTEM

(A)=3TNE68-SL
(B)=
(C)=
(D)=
(E)=
(F)=

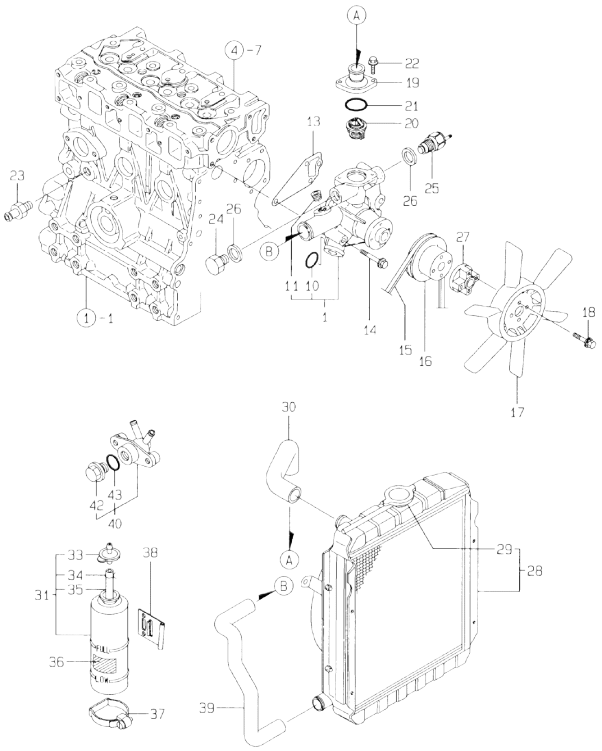

No.	Lev.	Parts No.	Description	Q'ty (A)	(B)	(C)	(D)	(E)	(F)	I	R
1	1	119244-42001	PUMP ASSY, WATER	1							
10	2	119225-42320	O-RING	1							
11	2	23871-030000	PLUG, R03	1							
13	1	119260-42020	GASKET, WATER PUMP	1							
14	1	26106-080452	BOLT, M8X 45 PLATED	3							
15	1	119225-42290	V-BELT, FM34.0	1							
16	1	119620-42350	V-PULLEY	1							
17	1	124251-44740	PLATE	1							
18	1	26014-060302	BOLT, M6X 30	4							
19	1	119260-49530	COVER, THERMOSTAT	1							
20	1	119260-49800	THERMOSTAT, 71	1							
21	1	24321-000350	O-RING, 1AG35.0	1							
22	1	26106-060182	BOLT, M6X 18 PLATED	2							
23	1	121550-49111	JOINT, PT1/4	1							
24	1	121450-42450	PLUG, M16	1							
25	1	121250-44901	SWITCH, 110	1							
26	1	124465-44950	GASKET, 16	2							
27	1	121267-44760	SPACER	1							
28	1	119621-44500	RADIATOR	1							
29	2	119259-44570	CAP, RADIATOR	1							
30	1	119688-49010	PIPE, WATER	1							
31	1	124450-44510	TANK ASSY, SUB	1							
33	2	124450-44530	CAP	1							
34	2	124450-44560	RETAINER	1							
35	2	23061-070230	PIPE, 7X 230	1							
36	1	121470-44540	LABEL, SUB-TANK	1							
37	1	124450-44550	BAND	1							
38	1	121256-44600	BRACKET, SUB TANK	1							
39	1	119645-49020	PIPE, WATER	1							
40	1	121450-49110	COCK ASSY, 3-WAY	1							
42	2	121250-49121	PLUG, DRAIN	1							
43	2	24311-000160	O-RING, 1AP16.0	1							

N:Old ◄Yes/No► New. Q:Old ◄No/Yes► New. R:Old ◄Yes/Yes► New. S:Old ◄No/No► New. W:Add. Z:Discontinued. F:Interchangeable by set. K:Q'ty Change

Copyright (C) YANMAR CO., LTD. All RightsReserved.

Fig.11. FUEL INJECTION PUMP

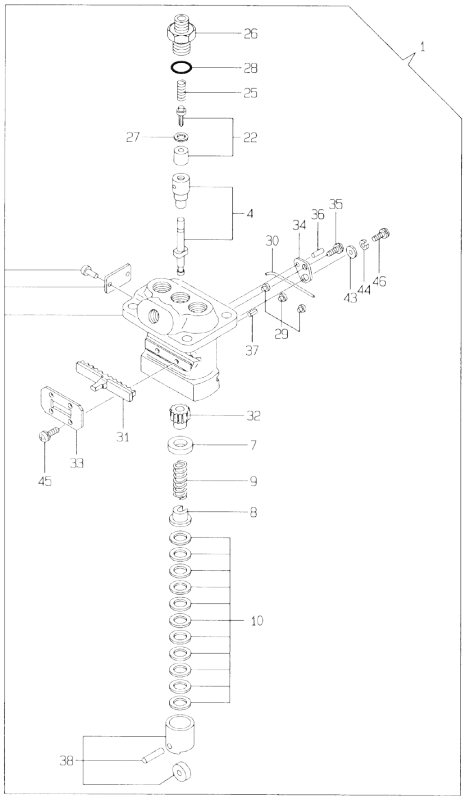

(A)=3TNE68-SL (D)=
(B)= (E)=
(C)= (F)=

No.	Lev.	Parts No.	Description	Q'ty (A)	(B)	(C)	(D)	(E)	(F)	I	R
1	1	719225-51100	PUMP ASSY, INJECTION	1							
4	2	119225-51100	PLUNGER ASSY	3							
7	2	119620-51170	RETAINER, SPRING A	3							
8	2	119620-51180	RETAINER, SPRING B	3							
9	2	119620-51190	SPRING, PLUNGER	3							
10	2	119620-51250	SHIM SET	3							
22	2	119225-51300	VALVE ASSY, DELIVERY	3							
25	2	105546-51330	SPRING, DELIVERY	3							
26	2	119620-51340	HOLDER, DELIVERY	3							
27	2	119620-51350	GASKET	3							
28	2	119620-51370	O-RING	3							
29	2	119620-51450	PIECE	3							
30	2	119620-51461	PIN	1							
31	2	119660-51500	RACK, CONTROL	1							
32	2	119620-51510	PINION	3							
33	2	119660-51530	RETAINER, RACK	1							
34	2	119620-51650	PLATE	2							
35	2	119620-51660	SCREW	2							
36	2	119620-51670	PIN	2							
37	2	119620-51680	PIN	1							
38	2	119620-51700	TAPPET ASSY	3							
43	2	22137-040000	WASHER, 4	2							
44	2	22217-040000	WASHER, SPRING 4	2							
45	2	26022-040082	SCREW, M4X 8	4							
46	2	26587-040102	SCREW, M4X10	2							

N:Old ◄Yes/No► New. Q:Old ◄No/Yes► New. R:Old ◄Yes/Yes► New. S:Old ◄No/No► New. W:Add. Z:Discontinued. F:Interchangeable by set. K:Q'ty Change

Copyright (C) YANMAR CO., LTD. All RightsReserved.

Fig.12. GOVERNOR

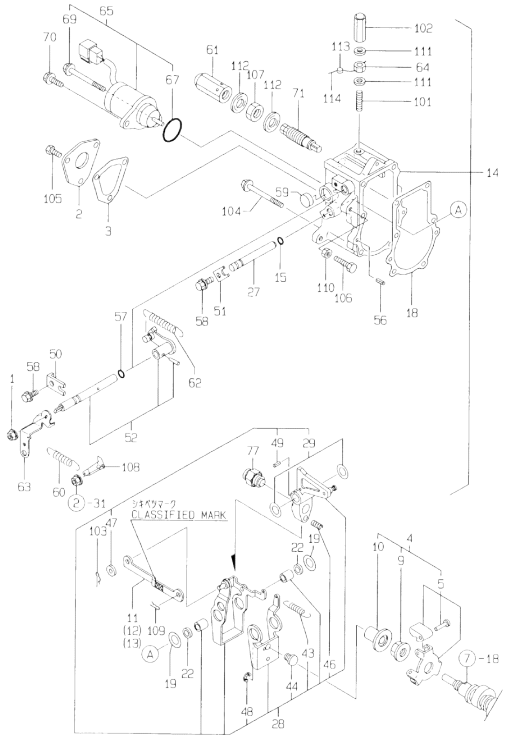

Remarks
(1) SELECTIVE PARTS : CERTAIN THE CLASSIFICATION MARK, THEN PLACE YOUR ORDER.(REF. TO ILLUSTRATION)

(A)=3TNE68-SL (D)=
(B)= (E)=
(C)= (F)=

No.	Lev.	Parts No.	Description	Q'ty (A)	(B)	(C)	(D)	(E)	(F)	I	R
1	1	194990-22050	NUT, M8	1							
2	1	119660-61060	COVER, GOVERNOR CASE	1							
3	1	119660-61071	GASKET	1							
4	1	119600-61100	DRIVE ASSY	1							
5	2	119600-61200	WEIGHT ASSY,GOVERNOR	1							
9	2	119660-61300	NUT	1							
10	2	119660-61341	SLEEVE	1							
11	1	119660-61121	LINK, NO MARK	1							1
12	1	119660-61140	LINK, MARK :2	1							1
13	1	119660-61150	LINK, MARK :3	1							1
14	1	119632-61200	CASE ASSY, GOVERNOR	1							
15	2	129155-51280	O-RING, S6	1							
18	2	119660-61052	GASKET	1							
19	2	119660-61460	SHIM SET	1							
22	2	129155-61480	SPACER ASSY	2							
27	2	119660-61491	SHAFT	1							
28	2	119232-61510	LEVER ASSY, GOVERNOR	1							
29	3	174307-51700	SHIM SET	2							
43	3	119232-61540	SPRING	1							
44	3	119600-61541	SHIFTER	1							
46	3	119660-61651	SPRING, STARTING	1							
47	3	22117-040000	WASHER, 4	1							
48	3	22272-000040	RING, E- 4	1							
49	3	22351-030014	PIN, SPRING 3.0X14	1							
50	2	119600-61900	RETAINER, SHAFT	1							
51	2	119660-61901	RETAINER, SHAFT	1							
52	2	119285-66080	SHAFT ASSY	1							
56	2	22351-040010	PIN, SPRING 4.0X10	2							
57	2	24341-000070	O-RING, 1AS7.0	1							
58	2	26106-060102	BOLT, M6X 10 PLATED	2							
59	1	119640-61400	PLUG	1							
60	1	119840-61870	SPRING	1							
61	1	26687-120002	NUT, CAP M12	1							
62	1	119600-66020	SPRING, REGULATOR	1							
63	1	119640-66051	HANDLE, REGULATOR	1							
64	1	124550-66370	NUT, M6	1							
65	1	119653-66500	STOPPER ASSY	1							
67	2	24341-000280	O-RING, 1AS28.0	1							
69	2	26106-060952	BOLT, M6X 95 PLATED	1							
70	1	121465-59950	BOLT, M6X16	1							
71	1	119600-66530	LIMITER ASSY, FUEL	1							
77	1	119610-66700	ANGLEICH ASSY	1							
101	1	121575-66830	SCREW	1							
102	1	119600-66840	NUT, CAP	1							
103	1	22360-040000	PIN, SNAP 4	1							
104	1	26106-060702	BOLT, M6X 70 PLATED	5							
105	1	26116-050102	BOLT, M5X 10 PLATED	3							
106	1	26116-060304	BOLT, M6X 30 PLATED	1							
107	1	26776-120002	NUT, LOCK M12	1							
108	1	119656-66910	HOOK	1							
109	1	22360-060000	PIN, SNAP 6	1							

N:Old ←Yes/No→ New. Q:Old ←No/Yes→ New. R:Old ←Yes/Yes→ New. S:Old ←No/No→ New. W:Add. Z:Discontinued. F:Interchangeable by set. K:Q'ty Change

++ CONTINUE ++

Copyright (C) YANMAR CO., LTD. All RightsReserved.

Fig.12. GOVERNOR

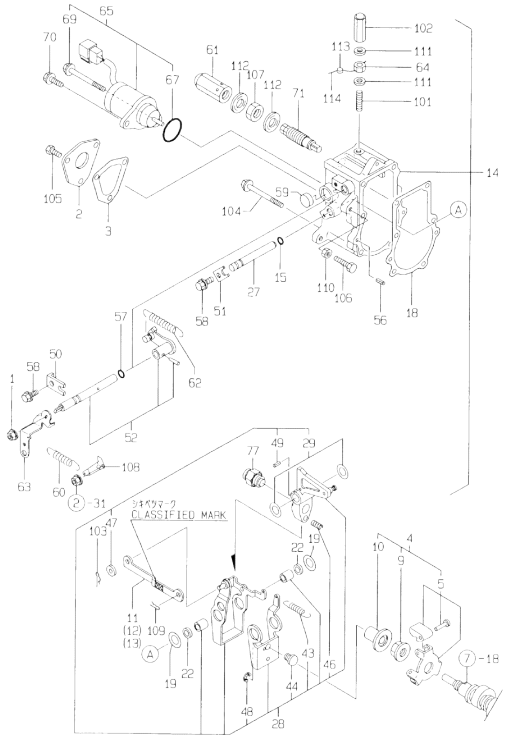

Remarks
(1) SELECTIVE PARTS : CERTAIN THE CLASSIFICATION MARK, THEN PLACE YOUR ORDER.(REF. TO ILLUSTRATION)

(A)=3TNE68-SL (D)=
(B)= (E)=
(C)= (F)=

No.	Lev.	Parts No.	Description	Q'ty (A)	(B)	(C)	(D)	(E)	(F)	I	R
110	1	26756-060002	NUT, LOCK M6	1							
111	1	22190-060003	SEAL WASER 6	2							
112	1	22190-120002	WASHER, SEAL 12	2							
113	1	135210-61090	LEAD	1							
114	1	22451-060000	WIRE, 0.6	1							

N:Old ←Yes/No→ New. Q:Old ←No/Yes→ New. R:Old ←Yes/Yes→ New. S:Old ←No/No→ New. W:Add. Z:Discontinued. F:Interchangeable by set. K:Q'ty Change

Copyright (C) YANMAR CO., LTD. All RightsReserved.

Fig.13. FUEL INJECTION VALVE

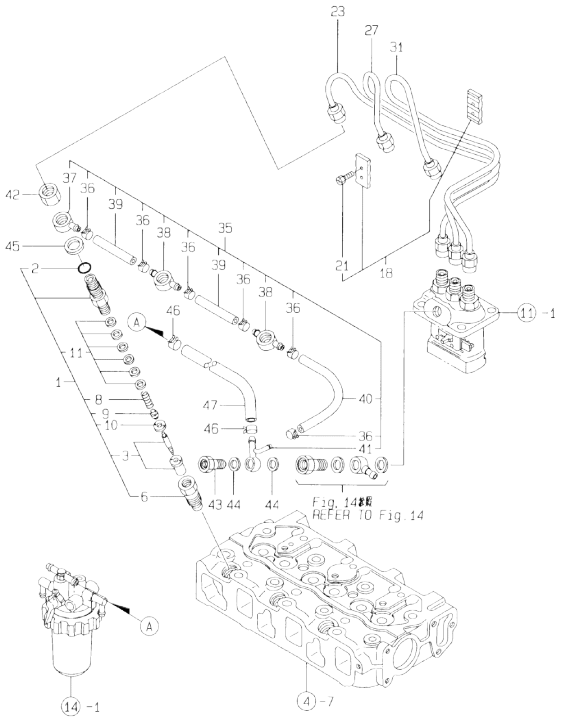

(A)=3TNE68-SL
(B)=
(C)=
(D)=
(E)=
(F)=

No.	Lev.	Parts No.	Description	Q'ty (A)	(B)	(C)	(D)	(E)	(F)	I	R
1	1	719620-53700	VALVE ASSY,INJECTION	3							
2	2	129155-61830	O-RING, S10	3							
3	2	119620-53000	VALVE ASSY,INJECTION	3							
6	2	119620-53080	NUT, NOZZLE	3							
8	2	119620-53120	SPRING, NOZZLE	3							
9	2	114250-53130	SEAT, SPRING	3							
10	2	119620-53140	SPACER, VALVE STOP	3							
11	2	114250-53400	SHIM SET	3							
18	1	129150-59120	RETAINER, PIPE	1							
21	2	129150-59131	BOLT, M4X14	2							
23	1	119209-59810	PIPE ASSY, INJECTION	1							
27	1	119209-59820	PIPE ASSY, INJECTION	1							
31	1	119209-59830	PIPE ASSY, INJECTION	1							
35	1	119642-59540	PIPE ASSY, RETURN	1							
36	2	124066-59100	CLIP, HOSE 8	6							
37	2	119260-59520	JOINT	1							
38	2	119260-59530	JOINT	2							
39	2	105025-59550	PIPE, FUEL RETURN	2							
40	2	119642-59550	PIPE, FUEL RETURN	1							
41	2	119642-59570	JOINT, OVER FLOW	1							
42	1	119620-59700	NUT, NOZZLE	3							
43	1	124550-59820	BOLT, PIPE JOINT M8	1							
44	1	23414-080012	GASKET, 8X1.0	2							
45	1	23414-140000	GASKET, 14X1.0	3							
46	1	124766-59050	CLIP, HOSE 12	2							
47	1	119233-59560	PIPE, FUEL RETURN	1							

N:Old ←Yes/No→ New. Q:Old ←No/Yes→ New. R:Old ←Yes/Yes→ New. S:Old ←No/No→ New. W:Add. Z:Discontinued. F:Interchangeable by set. K:Q'ty Change

Copyright (C) YANMAR CO., LTD. All RightsReserved.

Fig.14. FUEL LINE

(A)=3TNE68-SL
(B)=
(C)=
(D)=
(E)=
(F)=

No.	Lev.	Parts No.	Description	Q'ty (A)	(B)	(C)	(D)	(E)	(F)	I	R
1	1	129053-55620	FILTER ASSY, FUEL	1							
2	2	104200-55330	SPRING, VALVE	1							
3	2	119810-55340	LEVER	1							
4	2	129107-55510	CUP, STRAINER	1							
5	2	102103-55520	O-RING	1							
6	2	110250-55610	RING, RETAINING	1							
7	2	121250-55620	SPRING	1							
8	2	119810-55650	ELEMENT	1							
9	2	121257-55731	FLOAT	1							
10	2	104200-55750	SCREW, M4	1							
11	2	24311-240100	O-RING, 1AP10A	1							
12	1	26014-080852	BOLT, M8X 85	1							
13	1	119244-59020	PIPE ASSY, FUEL	1							
14	2	104264-59030	JOINT, PIPE 8	1							
15	2	124766-59050	CLIP, HOSE 12	2							
16	2	121522-59100	PIPE, FUEL D12X500	1							
17	1	104264-59030	JOINT, PIPE 8	1							
18	1	119230-59031	PIPE ASSY, FUEL	1							
19	2	101304-59020	JOINT, PIPE 12	1							
20	2	124766-59050	CLIP, HOSE 12	2							
21	2	119230-59080	PIPE, FUEL D12X185	1							
22	1	124766-59050	CLIP, HOSE 12	1							
23	1	105582-59150	BOLT, PIPE JOINT	2							
24	1	104200-59170	GASKET, 12	2							
25	1	119462-59190	BOLT ASSY, JOINT	1							
28	1	22190-080002	WASHER, SEAL 6	2							
29	1	22190-080002	WASHER, SEAL 6	2							
30	1	129052-55630	FILTER, FUEL	1							
31	1	121520-01851	GASKET	1							
32	1	119600-52021	PUMP ASSY, FUEL FEED	1							
33	1	26106-060162	BOLT, M6X 16 PLATED	2							
34	1	129411-55690	SPACER	1							

N:Old ←Yes/No→ New. Q:Old ←No/Yes→ New. R:Old ←Yes/Yes→ New. S:Old ←No/No→ New. W:Add. Z:Discontinued. F:Interchangeable by set. K:Q'ty Change

Copyright (C) YANMAR CO., LTD. All RightsReserved.

Fig.15. STARTING MOTOR

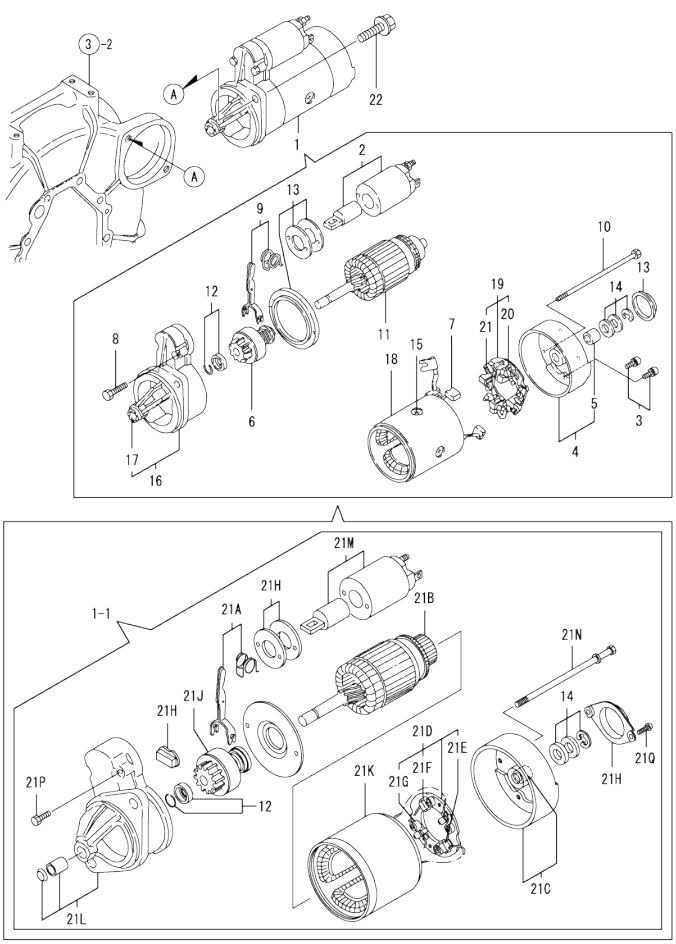

0CD10-M62900 Fig.15

(A)=3TNE68-SL (D)=
(B)= (E)=
(C)= (F)=

No.	Lev.	Parts No.	Description	Q'ty (A)	(B)	(C)	(D)	(E)	(F)	I	R
1	1	119225-77011	STARTER	1							
1-1	1	119226-77010	STARTER,12V-0.8KW	1							R
	(A=*2000.07.)										
2	2	X2114275070	SWITCH, MAGNETIC	1							Z
	(A=*2000.07.)										
3	2	X2114283500	SCREW SET	1							Z
	(A=*2000.07.)										
4	2	X2114430010	COVER ASSY, REAR	1							Z
	(A=*2000.07.)										
5	3	X2114535200	METAL, STARTER	1							Z
	(A=*2000.07.)										
6	2	X2114455040	PINION ASSY	1							Z
	(A=*2000.07.)										
7	2	X2114531200	BRUSH (+)	2							Z
	(A=*2000.07.)										
8	2	X2114586700	BOLT M6X 37	2							Z
	(A=*2000.07.)										
9	2	X2114660130	LEVER KIT, SHIFT	1							Z
	(A=*2000.07.)										
10	2	X2114680050	BOLT, THROUGH	2							Z
	(A=*2000.07.)										
11	2	X2114710080	AMATURE ASSY.	1							Z
	(A=*2000.07.)										
12	2	X2114715500	STOPPER SET	1							
13	2	X2114780060	COVER ASSY, DUST	1							Z
	(A=*2000.07.)										
14	2	X2114811000	WASHER KIT, THRUST	1							
15	2	X2114821500	SCREW SET	4							Z
	(A=*2000.07.)										
16	2	X2114866060	HOUSING, GEAR	1							Z
	(A=*2000.07.)										
17	3	X2114535200	METAL, STARTER	1							Z
	(A=*2000.07.)										
18	2	X2114921040	COIL ASSY, FIELD	1							Z
	(A=*2000.07.)										
19	2	X2114990010	HOLDER ASSY, BRUSH	1							Z
	(A=*2000.07.)										
20	3	X2114831300	BRUSH (-)	1							Z
	(A=*2000.07.)										
21	3	X2114931400	SPRING, BRUSH	3							Z
	(A=*2000.07.)										
21A	2	X2114560130	LEVER KIT, SHIFT	1							W
	(A=*2000.07.)										
21B	2	114371-77110	ARMATURE	1							W
	(A=*2000.07.)										
21C	2	114371-77140	COVER ASSY, REAR	1							W
	(A=*2000.07.)										
21D	2	114371-77160	HOLDER ASSY, BRUSH	1							W
	(A=*2000.07.)										
21E	3	114371-79040	BRUSH	2							W
	(A=*2000.07.)										

N:Old ←Yes/No→ New. Q:Old ←No/Yes→ New. R:Old ←Yes/Yes→ New. S:Old ←No/No→ New. W:Add. Z:Discontinued. F:Interchangeable by set. K:Q'ty Change

++ CONTINUE ++

Copyright (C) YANMAR CO., LTD. All RightsReserved.

Fig.15. STARTING MOTOR

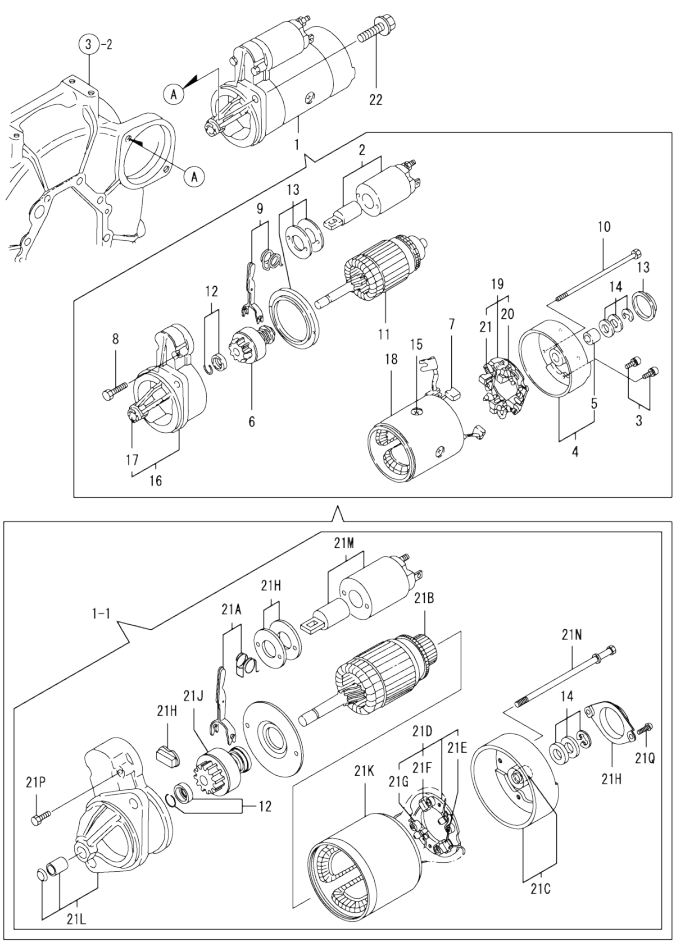

(A)=3TNE68-SL (D)=
(B)= (E)=
(C)= (F)=

No.	Lev.	Parts No.	Description	Q'ty (A)	(B)	(C)	(D)	(E)	(F)	I	R
21F	3	114371-79050	BRUSH	1						W	
	(A=*2000.07.)										
21G	3	114371-79060	SPRING	4						W	
	(A=*2000.07.)										
21H	2	114371-77170	COVER ASSY, DUST	1						W	
	(A=*2000.07.)										
21J	2	119226-77650	CLUTCH ASSY	1						W	
	(A=*2000.07.)										
21K	2	124097-77710	YOKE ASSY	1						W	
	(A=*2000.07.)										
21L	2	124097-77760	CASE ASSY, GEAR	1						W	
	(A=*2000.07.)										
21M	2	124195-77760	MAGNETIC SWITCH ASSY	1						W	
	(A=*2000.07.)										
21N	2	124195-77770	BOLT, THROUGH	2						W	
	(A=*2000.07.)										
21P	2	114371-79070	BOLT	2						W	
	(A=*2000.07.)										
21Q	2	26022-040122	SCREW, M4X12	2						W	
	(A=*2000.07.)										
22	1	26106-100252	BOLT, M10X 25 PLATED	2							

N:Old ◄Yes/No► New. Q:Old ◄No/Yes► New. R:Old ◄Yes/Yes► New. S:Old ◄No/No► New. W:Add. Z:Discontinued. F:Interchangeable by set. K:Q'ty Change

Copyright (C) YANMAR CO., LTD. All RightsReserved.

Fig.16. GENERATOR

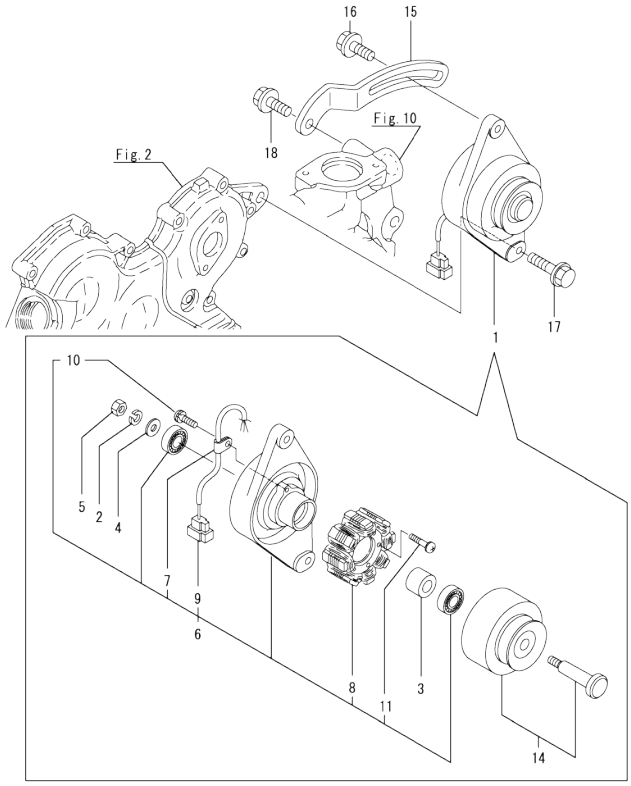

(A)=3TNE68-SL (D)=
(B)= (E)=
(C)= (F)=

No.	Lev.	Parts No.	Description	Q'ty (A)	(B)	(C)	(D)	(E)	(F)	I	R
1	1	129150-77202	GENERATOR	1							
1-1	1	129150-77203	DINAMO ASSY	1						N	
	(A=EXXXXX)										
2	2	XM219230000	WASHER, SPRING	1							
3	2	XM329830000	COLLAR	1							
4	2	XM860250000	WASHER, 10	1							
5	2	XM863720000	NUT	1							
6	2	129150-77210	PLATE ASSY	1							
7	3	XM069000000	CLAMP	1							
8	3	XM081780000	STATOR	1							
9	3	XM178780000	COUPLER	1							
10	3	XYSPS400800	SCREW	1							
11	3	XYSPS402400	SCREW	2							
14	2	129150-77230	FLYWHEEL ASSY	1							
14-1	2	129150-77280	FLYWHEEL ASSY	1						N	
	(A=EXXXXX)										
15	1	119650-77330	ADJUSTER	1							
16	1	26014-080252	BOLT, M8X 25	1							
17	1	26106-100402	BOLT, M10X 40 PLATED	1							
18	1	26106-080202	BOLT, M8X 20 PLATED	1							

N:Old ←Yes/No→ New. Q:Old ←No/Yes→ New. R:Old ←Yes/Yes→ New. S:Old ←No/No→ New. W:Add. Z:Discontinued. F:Interchangeable by set. K:Q'ty Change

Copyright (C) YANMAR CO., LTD. All RightsReserved.

Fig.17. ELECTRIC PARTS

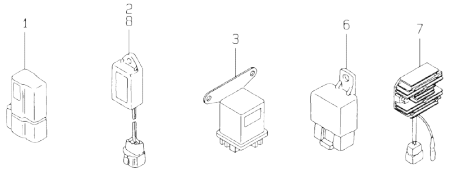

(A)=3TNE68-SL
(B)=
(C)=
(D)=
(E)=
(F)=

No.	Lev.	Parts No.	Description	Q'ty (A)	(B)	(C)	(D)	(E)	(F)	I	R
1	1	119643-66900	DIODE	1							
2	1	119632-77920	TIMER	1							
3	1	119650-77910	RELAY ASSY, GLOW	1							
6	1	119247-77100	RELAY, SAFETY	1							
7	1	119653-77710	LIMITER, CURRENT	1							
8	1	128300-77920	TIMER	1							

N:Old ◄Yes/No► New. Q:Old ◄No/Yes► New. R:Old ◄Yes/Yes► New. S:Old ◄No/No► New. W:Add. Z:Discontinued. F:Interchangeable by set. K:Q'ty Change

Copyright (C) YANMAR CO., LTD. All RightsReserved.

Fig.18. GASKET SET

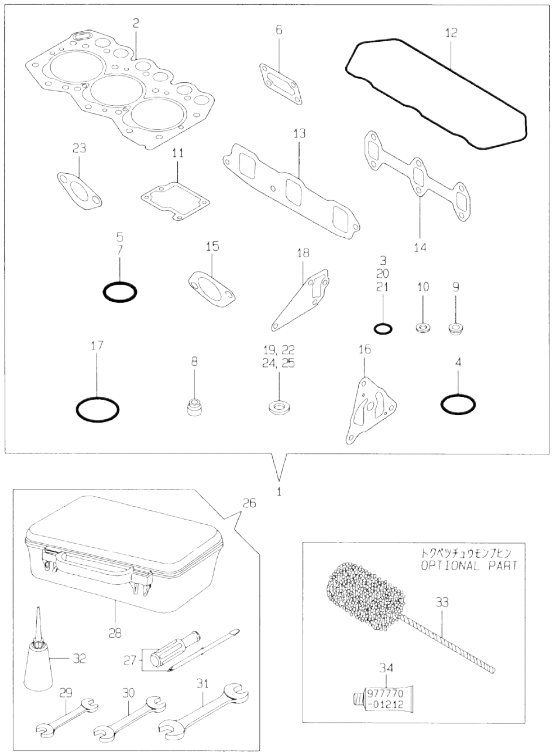

(A)=3TNE68-SL
(B)=
(C)=
(D)=
(E)=
(F)=

No.	Lev.	Parts No.	Description	Q'ty (A)	(B)	(C)	(D)	(E)	(F)	I	R
1	1	719265-92690	GASKET SET	1							1
2	2	119265-01341	GASKET, HEAD	1							
3	2	24311-000120	O-RING, 1AP12.0	4							
4	2	24311-000320	O-RING, 1AP32.0	2							
5	2	24341-000240	O-RING, 1AS24.0	1							
6	2	119660-01562	GASKET	1							
7	2	24311-000180	O-RING, 1AP18.0	1							
8	2	119260-11340	SEAL, VALVE STEM	6							
9	2	119600-11450	PROTECTOR, NOZZLE	3							
10	2	119600-11460	GASKET, NOZZLE	6							
11	2	119260-03031	GASKET	1							
12	2	119260-11310	GASKET, BONNET	1							
13	2	119270-12110	GASKET, MANIFOLD	1							
14	2	119260-13110	GASKET	1							
15	2	119263-13540	GASKET, SILENCER	2							
16	2	119660-32020	GASKET, PUMP	1							
17	2	24321-000350	O-RING, 1AG35.0	1							
18	2	119260-42020	GASKET, WATER PUMP	1							
19	2	124465-44950	GASKET, 16	2							
20	2	129155-61830	O-RING, S10	3							
21	2	119209-35030	O-RING, P11	1							
22	2	23414-140000	GASKET, 14X1.0	3							
23	2	121520-01851	GASKET	1							
24	2	104200-59170	GASKET, 12	2							
25	2	23414-080012	GASKET, 8X1.0	2							
26	1	171001-93100	BOX, TOOL	1							
27	2	104200-92350	DRIVER, SCREW	1							
28	2	104200-92600	BOX, TOOL	1							
29	2	28110-100120	SPANNER, 10X12	1							
30	2	28110-140170	SPANNER, 14X17	1							
31	2	28110-190220	SPANNER, 19X22	1							
32	2	28210-000140	OILER	1							
33	1	129400-92400	HONE	1							1
34	1	977770-01212	GASKET, LIQUID	1							1

Remarks
(1) OPTIONAL PART.

N:Old $\frac{\text{Yes}}{\text{No}}$ New. Q:Old $\frac{\text{No}}{\text{Yes}}$ New. R:Old $\frac{\text{Yes}}{\text{Yes}}$ New. S:Old $\frac{\text{No}}{\text{No}}$ New. W:Add. Z:Discontinued. F:Interchangeable by set. K:Q'ty Change

Copyright (C) YANMAR CO., LTD. All RightsReserved.

Parts No. Index

Parts No.	Fig. No.	Ref. No.
101304-59020	14	19
102103-55520	14	5
104200-55330	14	2
104200-55750	14	10
104200-59170	14	24
	18	24
104200-92350	18	27
104200-92600	18	28
104264-59030	14	14
		17
105010-11230	4	36
		40
105025-59550	13	39
105027-12570	5	8
105027-12580	5	9
105546-51330	11	25
105582-59150	14	23
110250-55610	14	6
114250-11120	4	19
114250-11180	4	20
114250-53130	13	9
114250-53400	13	11
114371-77110	15	21 B
114371-77140	15	21 C
114371-77160	15	21 D
114371-77170	15	21 H
114371-79040	15	21 E
114371-79050	15	21 F
114371-79060	15	21 G
114371-79070	15	21 P
119209-35030	9	26
	18	21
119209-59810	13	23
119209-59820	13	27
119209-59830	13	31
119225-14200	7	18
119225-35300	9	16
119225-42290	10	15
119225-42320	10	10
119225-51100	11	4
119225-51300	11	22
119225-77011	15	1
119226-77010	15	1 -1
119226-77650	15	21 J
119230-59031	14	18
119230-59080	14	21
119232-61510	12	28
119232-61540	12	43
119233-01770	3	13
119233-12540	5	5

Parts No.	Fig. No.	Ref. No.
119233-12580	5	12
119233-12670	5	10
119233-13560	6	7
119233-21570	8	12
119233-21670	8	8
119233-59560	13	47
119244-42001	10	1
119244-59020	14	13
119247-77100	17	6
119259-44570	10	29
119260-01200	1	23
119260-01490	2	14
119260-01510	2	17
119260-01590	2	1
119260-01600	3	2
119260-02020	1	6
119260-03020	4	50
119260-03031	4	51
	18	11
119260-07900	4	4
119260-11100	4	17
119260-11110	4	18
119260-11200	4	27
119260-11240	4	28
119260-11260	4	31
119260-11270	4	33
119260-11280	4	34
119260-11310	4	54
	18	12
119260-11340	4	23
	18	8
119260-11370	4	24
119260-11800	4	11
119260-13110	6	2
	18	14
119260-14100	7	7
119260-14200	7	1
119260-14400	7	2
119260-14580	7	3
119260-21200	8	5
119260-23910	8	30
119260-25100	7	11
119260-32000	9	1
119260-35081	9	25
119260-42020	10	13
	18	18
119260-49530	10	19
119260-49800	10	20
119260-59520	13	37
119260-59530	13	38

Parts No.	Fig. No.	Ref. No.
119263-13100	6	1
119263-13540	6	8
	18	15
119265-01341	1	24
	18	2
119265-11260	4	32
119265-11700	4	7
119265-21700	8	1
119265-22300	8	24
119265-22500	8	18
119265-22601	8	16
119265-22930	8	37
119265-22950	8	39
119265-23100	8	26
119265-23200	8	31
119266-02410	1	16
119270-12100	5	1
119270-12110	5	2
	18	13
119285-66080	12	52
119305-35150	9	15
119454-01721	3	11
119462-59190	14	25
119600-11450	4	25
	18	9
119600-11460	4	26
	18	10
119600-52021	14	32
119600-61100	12	4
119600-61200	12	5
119600-61541	12	44
119600-61900	12	50
119600-66020	12	62
119600-66530	12	71
119600-66840	12	102
119610-66700	12	77
119620-01620	3	6
119620-01750	3	4
119620-01800	2	4
119620-02450	7	4
119620-11350	4	44
119620-11390	4	55
119620-21500	8	11
119620-21941	8	10
119620-25912	7	13
119620-42350	10	16
119620-51170	11	7
119620-51180	11	8
119620-51190	11	9
119620-51250	11	10

Parts No.	Fig. No.	Ref. No.
119620-51340	11	26
119620-51350	11	27
119620-51370	11	28
119620-51450	11	29
119620-51461	11	30
119620-51510	11	32
119620-51650	11	34
119620-51660	11	35
119620-51670	11	36
119620-51680	11	37
119620-51700	11	38
119620-53000	13	3
119620-53080	13	6
119620-53120	13	8
119620-53140	13	10
119620-59700	13	42
119621-21680	8	9
119621-44500	10	28
119623-01950	2	23
119632-12551	5	11
119632-61200	12	14
119632-77920	17	2
119640-61400	12	59
119640-66051	12	63
119642-59540	13	35
119642-59550	13	40
119642-59570	13	41
119643-66900	17	1
119645-49020	10	39
119645-77820	4	61
119650-77330	16	15
119650-77910	17	3
119653-66500	12	65
119653-77710	17	7
119655-12560	5	7
119656-66910	12	108
119660-01551	2	20
119660-01562	2	21
	18	6
119660-01570	2	22
119660-01640	3	7
119660-01821	7	17
119660-01911	2	5
119660-25022	7	9
119660-25052	7	10
119660-32020	9	11
	18	16
119660-51500	11	31
119660-51530	11	33
119660-61052	12	18

Parts No. Index

Parts No.	Fig. No.	Ref. No.
119660-61060	12	2
119660-61071	12	3
119660-61121	12	11
119660-61140	12	12
119660-61150	12	13
119660-61300	12	9
119660-61341	12	10
119660-61460	12	19
119660-61491	12	27
119660-61651	12	46
119660-61901	12	51
119688-49010	10	30
119808-12540	5	6
119810-55340	14	3
119810-55650	14	8
119840-61870	12	60
121023-01550	2	32
121120-01620	3	3
121250-44901	10	25
121250-49121	10	42
121250-55620	14	7
121256-44600	10	38
121257-55731	14	9
121267-44760	10	27
121400-01640	3	14
121450-01560	2	18
121450-42450	10	24
121450-49110	10	40
121465-59950	12	70
121470-44540	10	36
121520-01851	14	31
	18	23
121520-34810	9	13
121522-59100	14	16
121550-49111	10	23
121575-66830	12	101
124060-01050	1	5
124066-59100	13	36
124085-02220	3	9
124097-77710	15	21 K
124097-77760	15	21 L
124160-01751	2	12
	4	49
124160-11360	4	47
124160-39450	9	28
124195-77760	15	21 M
124195-77770	15	21 N
124251-44740	10	17
124450-44510	10	31
124450-44530	10	33

Parts No.	Fig. No.	Ref. No.
124450-44550	10	37
124450-44560	10	34
124465-44950	10	26
	18	19
124550-59820	13	43
124550-66370	12	64
124766-59050	13	46
	14	15
		20
		22
124950-21600	8	15
128300-77920	17	8
129052-55630	14	30
129053-55620	14	1
129100-01580	3	1
	8	2
129107-55510	14	4
129132-34800	9	14
129150-35350	9	24
129150-59120	13	18
129150-59131	13	21
129150-77202	16	1
129150-77203	16	1 -1
129150-77210	16	6
129150-77230	16	14
129150-77280	16	14 -1
129155-51280	12	15
129155-61480	12	22
129155-61830	13	2
	18	20
129400-92400	18	33
129411-55690	14	34
129795-77800	4	60
135210-61090	12	113
171001-93100	18	26
174307-51700	12	29
194990-22050	2	30
	12	1
22117-040000	12	47
22137-040000	11	43
22190-060003	12	111
22190-080002	14	28
		29
22190-120002	12	112
22217-040000	11	44
22217-050000	4	56
22242-000100	4	43
22242-000200	7	15
22252-000200	8	25
22272-000040	12	48

Parts No.	Fig. No.	Ref. No.
22351-030010	8	34
22351-030014	12	49
22351-040010	2	19
	12	56
22351-060012	4	62
22360-040000	12	103
22360-060000	12	109
22451-060000	12	114
22512-040120	7	8
		22
	8	6
23061-070230	10	35
23065-120700	4	63
23414-080012	13	44
	18	25
23414-140000	13	45
	18	22
23871-030000	4	14
	10	11
24101-062034	7	24
24102-063034	7	23
24311-000120	2	6
	4	59
	18	3
24311-000160	10	43
24311-000180	3	16
	18	7
24311-000320	2	13
	4	57
	18	4
24311-240100	14	11
24321-000350	10	21
	18	17
24341-000070	12	57
24341-000240	2	33
	18	5
24341-000280	12	67
26014-060302	10	18
26014-080252	16	16
26014-080852	14	12
26022-040082	11	45
26022-040122	15	21 Q
26106-060102	3	17
	12	58
26106-060122	1	25
	7	16
	9	27
26106-060162	2	7
	5	3
	7	25

Parts No.	Fig. No.	Ref. No.
26106-060162	14	33
26106-060182	2	34
	10	22
26106-060222	3	10
26106-060282	5	4
26106-060302	2	8
26106-060402	2	9
	6	3
26106-060452	3	18
26106-060502	2	10
26106-060652	2	11
26106-060702	12	104
26106-060952	12	69
26106-080142	4	5
		6
26106-080202	16	18
26106-080452	4	45
	10	14
26106-100252	15	22
26106-100402	16	17
26116-050102	12	105
26116-060304	12	106
26206-100252	3	5
26216-060402	6	4
26216-080222	6	5
26366-060002	2	31
	6	6
26366-080002	4	46
26450-060202	9	12
26557-050102	4	58
26587-040102	11	46
26587-080102	7	26
26687-120002	12	61
26756-060002	4	38
		42
	12	110
26776-120002	12	107
27221-050080	4	15
27221-060100	1	11
27231-400000	1	12
27241-100000	1	13
27241-250000	1	14
27241-300000	1	15
27241-350000	4	16
28110-100120	18	29
28110-140170	18	30
28110-190220	18	31
28210-000140	18	32
714250-11570	4	21
719225-51100	11	1

Parts No. Index

Parts No.	Fig. No.	Ref. No.
719260-02800	1	17
719260-02870	1	26
719260-02930	1	20
719260-11520	4	48
719260-11650	4	35
719260-11660	4	39
719260-23600	8	32
719260-23610	8	35
719265-01560	1	1
719265-92690	18	1
719620-53700	13	1
977770-01212	2	35
	3	19
	18	34
X2114275070	15	2
X2114283500	15	3
X2114430010	15	4
X2114455040	15	6
X2114531200	15	7
X2114535200	15	5
		17
X2114560130	15	21 A
X2114586700	15	8
X2114660130	15	9
X2114680050	15	10
X2114710080	15	11
X2114715500	15	12
X2114780060	15	13
X2114811000	15	14
X2114821500	15	15
X2114831300	15	20
X2114866060	15	16
X2114921040	15	18
X2114931400	15	21
X2114990010	15	19
XM069000000	16	7
XM081780000	16	8
XM178780000	16	9
XM219230000	16	2
XM329830000	16	3
XM860250000	16	4
XM863720000	16	5
XYSPS400800	16	10
XYSPS402400	16	11

Parts No.	Fig. No.	Ref. No.

Parts No.	Fig. No.	Ref. No.

Parts No.	Fig. No.	Ref. No.