YANMAR

PARTS CATALOG

0CV10-M84300EN

Last update Sep., 2014

PREFACE

1. This Parts Catalog carries all parts incorporated in **YANMAR** Model 3TNE74−LW engine manufactured since April, 2002.

2. Each illustration corresponds to the parts list on the following page.

3. When ordering parts, clearly write down the engine model and serial number, as well as the name and number of each part in your order sheet. This will help insure reliable delivery of the parts you have ordered.

Directions for the Parts Catalog.

1.This Parts Catalog shows both standard and optional parts.
2.Parts may change without prior notice.
3.The following is an example of the Parts Catalog format.

0CF10-G21601 29. FUEL INJECTION PUMP(W/BOOST)

(A)=4JH-DT
(B)=4JH-DTZ
(C)=4JH-DTZP
(D)=4JH-DTZA
(E)=4JH-DTZY
(F)=

① REF.	② LEV.	PARTS NO.	DESCRIPTION	Q'TY (A)	(B)	(C)	(D)	(E)	(F)	③ I	⑤ R
1	1	729595-51390	FUEL INJECTION PUMP	1	1	1	1	1			1
1-1	1	729595-51391	FUEL INJECTION PUMP	1	1	1	1	1		N	1
	(A=E00185)	(B=E00200)									
3	2	26022-060162	SCREW M 6X 16	9	9	9	9	9			
3-1 ④	2	26022-060162	SCREW M 6X 16	4	4	4	4	4		K	
	(A=E00156)	(B=E00156)	(C=E00156) (D=E00156)	(E=E00156)							
4	2	129470-51040	CAMSHAFT	1	1	1	1	1			
5	2	122710-51050	BEARING, ROLLER	2	2	2	2	2			
6	2	129470-51060	RETAINER	1	1	1	1	1			

Remarks
(1) BOOST COMPEMSATOR TYPE. OPTIONAL PART, TO E00155,(4JH-DT, 4JH-DTZ

①Ref. No.

The Ref. No. listed may not be in accordance with the illustration Ref. No.

(Ex.) Illustration No. 1 List Ref No. 1 (Before change) → 1- 1 (After change)

For interchangeable symbols N, R and K, illustrations for new parts may be abbreviated.

②Lev. (Level)

Level indication
The numbers below indicate the level of relativity towards the main part.
1 ----- Main parts (Assembly parts)
2 ----- Sub component included in " 1 ".
3 ----- Sub component included in " 2 ".
Note) Parts that are not for sale are partially illustrated but not listed.

③Interchangeability Symbol

When a part change takes place, one of the following interchangeability symbols is indicated beside the part.

Symbol	Interchangeability	Contents note
N	Old ← Yes / No → New	New Part is interchangeable for Old Part but Old Part is not interchangeable for New Part.
Q	Old ← No / Yes → New	New Part is not interchangeable for Old Part but Old Part is interchangeable for New Part.
R	Old ← Yes / Yes → New	New/ Old Parts are both interchangeable.
S	Old ← No / No → New	New/ Old Parts are both not interchangeable.
W		Part newly added.
Z		Part discontinued.
F		Not interchangeable by a single part but interchangeable together with related parts.
K		Changes only for used parts quantities.

④Effective Machine No.

When a part changes, the effective Machine No. will be indicated in the (A)-(F) column.

Product Symbol	Product No.	Product Symbol	Product No.
C	Clutch No. Compressor No.	F	Machine No. (Agricultural Equip.)
D	Drive No.	M	Machine No.
E	Engine No.		

Note 1) A date may follow the symbol. (Ex.) 1996.01
Note 2) " XXXXX " and " ZZZZZ " are for parts that could not be predicted or for engine models that could not be identified.
Note 3) (A=E00185) is the E (Engine Serial Number) for the column (A) model (in this case 4JH-DT) after the parts design change.

⑤Remarks

Figures or alphabets (symbols) are entered in the remarks column.
The comments (remarks) on parts that are indicated at the bottom of the illustration are the same symbols as those stated above.

Contents

Fig. No.	Fig. Name
ENGINE 3TNE74-LW	
1.	CYLINDER BLOCK
2.	GEAR HOUSING
3.	MOUNTING FLANGE & OIL SUMP
4.	CYLINDER HEAD & BONET
5.	SUCTION MANIFOLD & AIR CLEANER
6.	EXHAUST MANIFOLD
7.	CAMSHAFT & DRIVING GEAR
8.	CRANKSHAFT & PISTON
9.	LUB.OIL SYSTEM
10.	COOLING WATER SYSTEM
11.	FUEL INJECTION PUMP
12.	GOVERNOR
13.	FUEL INJECTION VALVE
14.	FUEL LINE
15.	STARTING MOTOR
16.	GENERATOR
17.	GASKET SET

Fig. No.	Fig. Name

0CV10-M84300

Fig.1. CYLINDER BLOCK

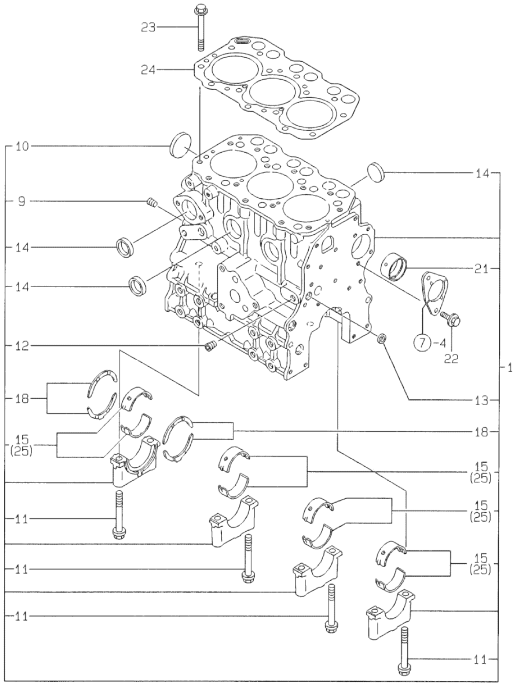

(A)=3TNE74-LW
(B)=
(C)=
(D)=
(E)=
(F)=

No.	Lev.	Parts No.	Description	Q'ty (A)	(B)	(C)	(D)	(E)	(F)	I	R
1	1	719623-01560	BLOCK ASSY, CYLINDER	1							
9	2	119600-01050	PLUG, PT1/4	1							
10	2	119623-01250	PLUG, 45	1							
11	2	119620-02020	BOLT, METAL CAP	8							
12	2	23876-010000	PLUG, R01	1							
13	2	27241-120000	PLUG, 12	1							
14	2	27241-300000	PLUG 30	6							
15	2	719620-02800	BEARING, MAIN	4							
18	2	719620-02930	BEARING, THRUST	2							
21	2	119624-02410	BUSH	1							
22	1	26106-060122	BOLT, M6X 12 PLATED	2							
23	1	119620-01200	BOLT, HEAD	14							
24	1	119623-01340	GASKET, HEAD	1							
25	1	719620-02870	BEARING, 0.25 US	4							1

Remarks
(1)UNDER-SIZE(U.S=0.25)PART.

N:Old ←Yes/No→ New. Q:Old ←No/Yes→ New, R:Old ←Yes/Yes→ New, S:Old ←No/No→ New. W:Add. Z:Discontinued. F:Interchangeable by set. K:Q'ty Change

Copyright (C) YANMAR CO., LTD. All RightsReserved.

0CV10-M84300

Fig.2. GEAR HOUSING

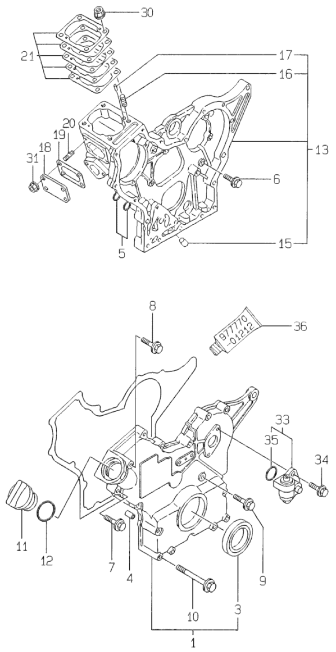

(A)=3TNE74-LW (D)=
(B)= (E)=
(C)= (F)=

No.	Lev.	Parts No.	Description	Q'ty (A)	(B)	(C)	(D)	(E)	(F)	I	R
1	1	119610-01590	COVER ASSY,GEAR CASE	1							
3	2	119620-01800	SEAL, OIL	1							
4	1	119660-01911	PIPE, KNOCK	4							
5	1	119624-32040	O-RING, P12.0	2							
6	1	26106-060162	BOLT, M6X 16 PLATED	7							
7	1	26106-060302	BOLT, M6X 30 PLATED	8							
8	1	26106-060602	BOLT, M6X 60 PLATED	1							
9	1	26106-060602	BOLT, M6X 60 PLATED	3							
10	1	26106-060802	BOLT, M6X 80 PLATED	6							
11	1	124160-01751	COVER, FILLER	1							
12	1	24311-000320	O-RING, 1AP32.0	1							
13	1	119610-01490	CASE ASSY, GEAR	1							
15	2	119660-01510	PLUG, 10X14	1							
16	2	121450-01560	STUD, M8X22	4							
17	2	22351-040010	PIN, SPRING 4.0X10	2							
18	1	119660-01551	COVER	1							
19	1	119660-01562	GASKET	1							
20	1	119660-01570	STUD, M6X12	4							
21	1	119623-01950	SHIM SET, ADJUSTING	1							
30	1	194990-22050	NUT, M8	4							
31	1	26366-060002	NUT, M6	4							
32	1	26106-060162	BOLT, M6X 16 PLATED	2							
33	1	129150-91400	GEAR	1							
35	2	24341-000240	O-RING, 1AS24.0	1							
36	1	977770-01212	GASKET, LIQUID	1							1

Remarks
(1) OPTIONAL PART.

N:Old ◄Yes/No► New. Q:Old ◄No/Yes► New, R:Old ◄Yes/Yes► New, S:Old ◄No/No► New. W:Add. Z:Discontinued. F:Interchangeable by set. K:Q'ty Change

Copyright (C) YANMAR CO., LTD. All RightsReserved.

0CV10-M84300

Fig.3. MOUNTING FLANGE & OIL SUMP

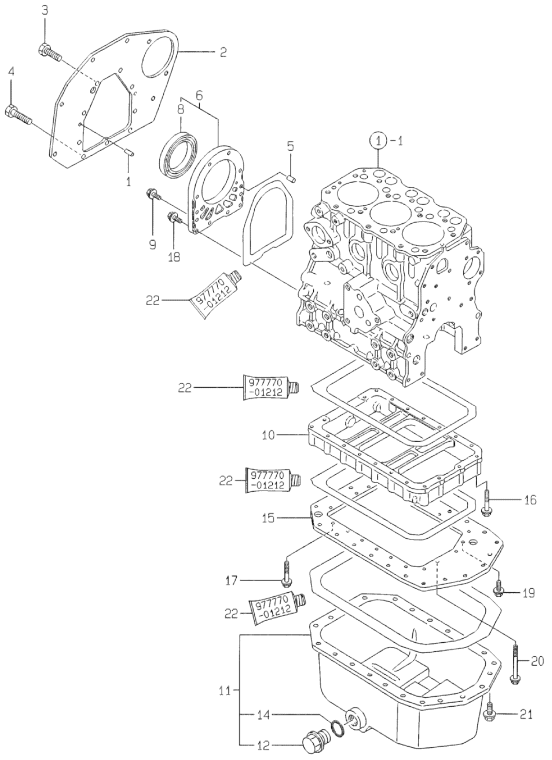

(A)=3TNE74-LW (D)=
(B)= (E)=
(C)= (F)=

No.	Lev.	Parts No.	Description	Q'ty (A)	(B)	(C)	(D)	(E)	(F)	I	R
1	1	129100-01580	PIN, M8X16	2							
2	1	119285-01600	FLANGE, MOUNTING	1							
3	1	26206-100202	BOLT, M10X 20 PLATED	6							
4	1	26206-100252	BOLT, M10X 25 PLATED	3							
5	1	119620-01620	PIN, M6X10	2							
6	1	119660-01640	CASE ASSY, OIL SEAL	1							
8	2	124085-02220	SEAL, OIL	1							
9	1	26106-060222	BOLT, M6X 22 PLATED	6							
10	1	119600-01722	SPACER, OIL SUMP	1							
11	1	129100-01760	SUMP ASSY, OIL	1							
12	2	171301-01640	PLUG, 22	1							
14	2	24341-000250	O-RING, 1AS25.0	1							
15	1	119685-01740	PLATE, OIL SUMP	1							
16	1	26106-060452	BOLT, M6X 45 PLATED	3							
17	1	26106-060502	BOLT, M6X 50 PLATED	14							
18	1	119285-01580	BOLT, M46X22	4							
19	1	26106-060202	BOLT, M6X 20 PLATED	3							
20	1	26106-060552	BOLT, M6X 55 PLATED	3							
21	1	26106-080102	BOLT, M8X 10 PLATED	22							
22	1	977770-01212	GASKET, LIQUID	1							1

Remarks
(1) OPTIONAL PART.

N:Old ←Yes/No→ New. Q:Old ←No/Yes→ New. R:Old ←Yes/Yes→ New. S:Old ←No/No→ New. W:Add. Z:Discontinued. F:Interchangeable by set. K:Q'ty Change

Copyright (C) YANMAR CO., LTD. All RightsReserved.

0CV10-M84300

Fig.4. CYLINDER HEAD & BONET

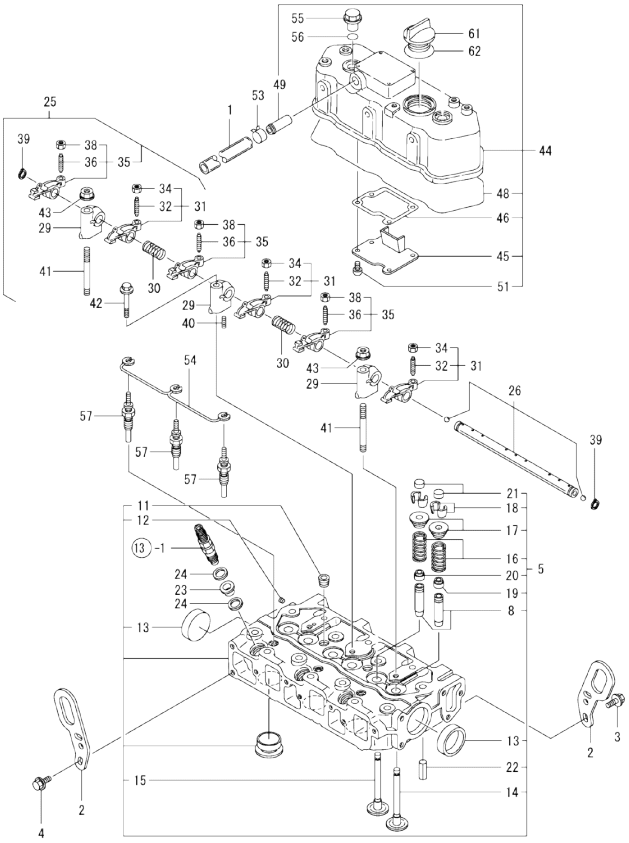

No.	Lev.	Parts No.	Description	Q'ty (A)	(B)	(C)	(D)	(E)	(F)	I	R
1	1	119685-03140	PIPE , BREATHER	1							
2	1	119260-07900	LIFTER	2							
3	1	26106-080142	BOLT, M8X 14 PLATED	1							
4	1	26106-080142	BOLT, M8X 14 PLATED	2							
5	1	719623-11700	HEAD ASSY, CYLINDER	1							
8	2	119620-11801	GUIDE, VALVE	6							1
11	2	23876-020000	PLUG, R02	2							
12	2	27221-050080	PLUG, 5X 8	1							
13	2	27241-400000	PLUG, 40	2							
14	2	119623-11100	VALVE, INTAKE	3							
15	2	119620-11110	VALVE, EXHAUST	3							
16	2	119620-11120	SPRING, VALVE	6							
17	2	119620-11180	RETAINER, SPRING	6							
18	2	27310-070001	COTTER, 7	6							
19	2	124160-11340	SEAL, VALVE STEM	3							
20	2	124950-11340	SEAL, VALVE STEM	3							
21	2	104211-11370	CAP, VALVE	6							
22	2	22351-060012	PIN, SPRING 6.0X12	2							
23	1	119600-11450	PROTECTOR, NOZZLE	3							
24	1	119600-11460	GASKET, NOZZLE	6							
25	1	119620-11200	SUPPORT ASSY, ARM	1							
26	2	119620-11240	SHAFT ASSY, ROCKER	1							
29	2	119620-11260	SUPPORT, ROCKER ARM	3							
30	2	119620-11280	SPRING	2							
31	2	719620-11650	ARM ASSY, ROCKER	3							
32	3	105010-11230	SCREW, VALVE ADJUST	3							
34	3	26856-060002	NUT, M6	3							
35	2	719620-11660	ARM ASSY, ROCKER	3							
36	3	105010-11230	SCREW, VALVE ADJUST	3							
38	3	26856-060002	NUT, M6	3							
39	2	22242-000120	RING, 12	2							
40	2	26979-050162	SCREW, M5X16	1							
41	1	119620-11350	STUD	2							
42	1	26106-080452	BOLT, M8X 45 PLATED	1							
43	1	26306-080002	NUT, M8	2							
44	1	719620-11521	BONNET ASSY, HEAD	1							
45	2	119620-03020	PLATE, SHELTER	1							
46	2	119620-03031	GASKET	1							
48	2	119620-11310	GASKET, BONNET	1							
49	2	118400-03060	JOINT, BREATHER	1							
51	2	22857-500100	SCREW, 5X10	4							
53	1	171008-03990	CLIP, HOSE 18.5	2							
54	1	119620-77820	CONNECTOR, GLOW PLUG	1							
55	1	124160-11360	KNOB	2							
56	1	24311-000120	O-RING, 1AP12.0	2							
57	1	129155-77800	PLUG, GLOW	3							
61	1	124160-01751	COVER, FILLER	1							
62	1	24311-000320	O-RING, 1AP32.0	1							

(A)=3TNE74-LW
(B)=
(C)=
(D)=
(E)=
(F)=

Remarks
(1) REPAIR PART.

N:Old $\frac{\text{Yes}}{\text{No}}$ New. Q:Old $\frac{\text{No}}{\text{Yes}}$ New. R:Old $\frac{\text{Yes}}{\text{Yes}}$ New. S:Old $\frac{\text{No}}{\text{No}}$ New. W:Add. Z:Discontinued. F:Interchangeable by set. K:Q'ty Change

Copyright (C) YANMAR CO., LTD. All RightsReserved.

0CV10-M84300

Fig.5. SUCTION MANIFOLD & AIR CLEANER

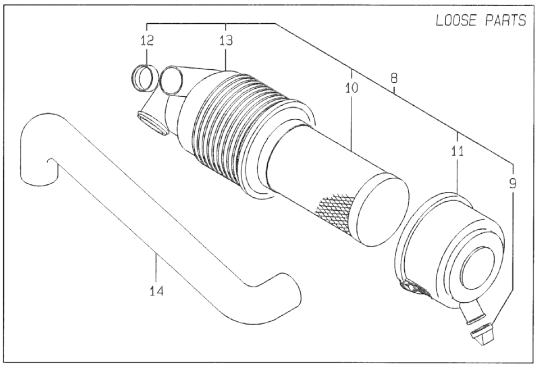

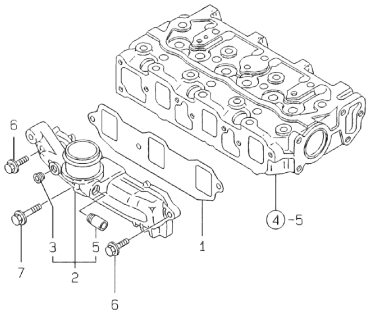

(A)=3TNE74-LW (D)=
(B)= (E)=
(C)= (F)=

No.	Lev.	Parts No.	Description	Q'ty (A)	(B)	(C)	(D)	(E)	(F)	I	R
1	1	119660-12111	GASKET, MANIFOLD	1							
2	1	119685-12731	MANIFOLD ASSY,INTAKE	1							
3	2	119285-01730	PLUG, NPT1/8	1							
5	2	104207-44480	JOINT	1							
6	1	26106-060182	BOLT, M6X 18 PLATED	2							
7	1	26106-060452	BOLT, M6X 45 PLATED	1							
8	1	119233-12540	CLEANER ASSY, AIR	1							
9	2	119808-12540	VALVE, UNLOADER	1							
10	2	119655-12560	ELEMENT	1							
11	2	105027-12570	COVER, AIR CREANER	1							
12	2	105027-12580	RING	1							
13	2	119233-12670	BODY, AIR CLEANER	1							
14	1	119632-12211	PIPE, AIR INTAKE	1							

N:Old ←Yes/No→ New. Q:Old ←No/Yes→ New. R:Old ←Yes/Yes→ New. S:Old ←No/No→ New. W:Add. Z:Discontinued. F:Interchangeable by set. K:Q'ty Change

Copyright (C) YANMAR CO., LTD. All RightsReserved.

0CV10-M84300

Fig.6. EXHAUST MANIFOLD

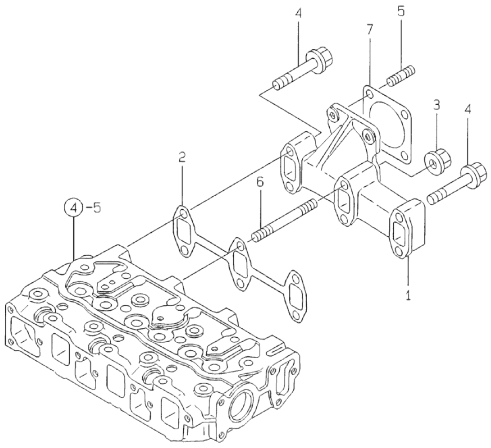

(A)=3TNE74-LW
(B)=
(C)=
(D)=
(E)=
(F)=

No.	Lev.	Parts No.	Description	Q'ty (A)	(B)	(C)	(D)	(E)	(F)	I	R
1	1	119600-13100	MANIFOLD, EXHAUST	1							
2	1	119620-13110	GASKET	1							
3	1	26306-080002	NUT, M8	2							
4	1	26106-080402	BOLT, M8X 40 PLATED	4							
5	1	119131-18320	STUD, M8X22	4							
6	1	26216-080552	STUD, M8X 55	2							
7	1	124701-11911	GASKET, SILENCER	1							

N:Old ◄Yes/No► New. Q:Old ◄No/Yes► New. R:Old ◄Yes/Yes► New. S:Old ◄No/No► New. W:Add. Z:Discontinued. F:Interchangeable by set. K:Q'ty Change

Copyright (C) YANMAR CO., LTD. All RightsReserved.

0CV10-M84300

Fig.7. CAMSHAFT & DRIVING GEAR

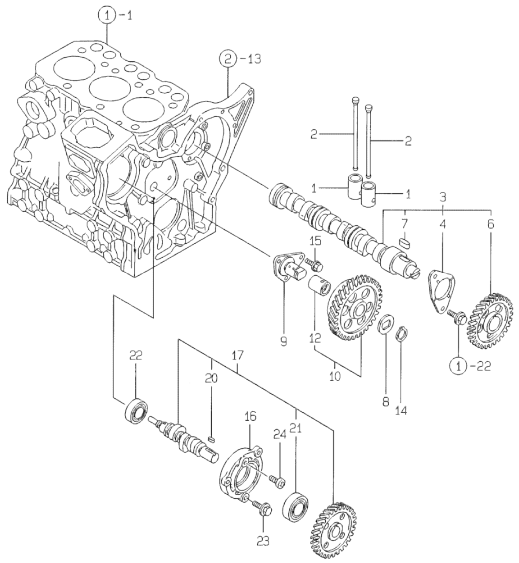

(A)=3TNE74-LW (D)=
(B)= (E)=
(C)= (F)=

No.	Lev.	Parts No.	Description	Q'ty (A)	(B)	(C)	(D)	(E)	(F)	I	R
1	1	119620-14200	TAPPET	6							
2	1	119620-14401	ROD, PUSH	6							
3	1	119629-14580	CAMSHAFT ASSY	1							
4	2	119620-02450	BEARING, THRUST	1							
6	2	119620-14100	GEAR, CAMSHAFT	1							
7	2	22512-040120	KEY, 4X 12	1							
8	1	119660-25022	RETAINER	1							
9	1	119660-25052	SHAFT, IDLE	1							
10	1	119620-25102	GEAR ASSY, IDLE	1							
12	2	119620-25912	BUSH	1							1
14	1	22242-000200	RING, 20	1							
15	1	26106-060122	BOLT, M6X 12 PLATED	3							
16	1	119660-01821	BEARING, FUEL CAM	1							
17	1	719660-14590	CAMSHAFT	1							
20	2	22512-040120	KEY, 4X 12	1							
21	2	24102-063034	BEARING, BALL 6303U	1							
22	1	24101-062034	BEARING, BALL 6203	1							
23	1	26106-060162	BOLT, M6X 16 PLATED	3							
24	1	26587-080102	SCREW, M8X10	1							

Remarks
(1) REPAIR PART.

N:Old ←Yes/No→ New. Q:Old ←No/Yes→ New. R:Old ←Yes/Yes→ New. S:Old ←No/No→ New. W:Add. Z:Discontinued. F:Interchangeable by set. K:Q'ty Change

Copyright (C) YANMAR CO., LTD. All RightsReserved.

0CV10-M84300

Fig.8. CRANKSHAFT & PISTON

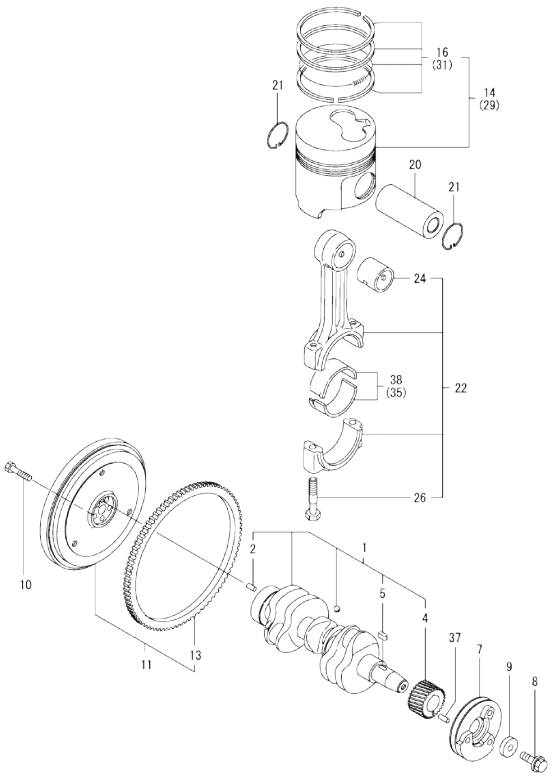

(A)=3TNE74-LW (D)=
(B)= (E)=
(C)= (F)=

No.	Lev.	Parts No.	Description	Q'ty (A)	(B)	(C)	(D)	(E)	(F)	I	R
1	1	119623-21700	CRANKSHAFT ASSY	1							
2	2	129100-01580	PIN, M8X16	1							
4	2	119644-21200	GEAR, CRANKSHAFT	1							
5	2	22512-040120	KEY, 4X 12	1							
7	1	119653-21650	V-PULLEY	1							
8	1	119621-21680	BOLT, FLANGE 12X1.25	1							
9	1	119620-21941	WASHER	1							
10	1	119620-21500	BOLT, FLYWHEEL	5							
11	1	119687-21590	FLYWHEEL ASSY	1							
13	2	124060-21600	GEAR, RING	1							
14	1	119623-22080	PISTON ASSY	3							
16	2	119623-22500	RING SET, PISTON	3							
20	1	114399-22300	PIN, PISTON D=21	3							
21	1	22252-000210	RING, 21	6							
22	1	719620-23100	ROD ASSY, CONNECTING	3							
24	2	119620-23910	BEARING, PISTON PIN	3							1
26	2	105225-23200	BOLT, CONNECTING ROD	6							
29	1	119623-22900	PISTON ASSY, 0.25 OS	3							2
31	2	119623-22950	RING SET, 0.25 OS	3							2
35	1	719620-23610	BEARING ASSY, 0.25	3							3
37	1	22351-030012	PIN, SPRING 3.0X12	1							
38	1	719620-23600	BEARING, CRANK PIN	3							

Remarks
(1) REPAIR PART.
(2) OVER-SIZE(O.S=0.25)PART.
(3) UNDER-SIZE(U.S=0.25)PART.

N:Old ←Yes/No→ New. Q:Old ←No/Yes→ New. R:Old ←Yes/Yes→ New. S:Old ←No/No→ New. W:Add. Z:Discontinued. F:Interchangeable by set. K:Q'ty Change

Copyright (C) YANMAR CO., LTD. All RightsReserved.

0CV10-M84300

Fig.9. LUB.OIL SYSTEM

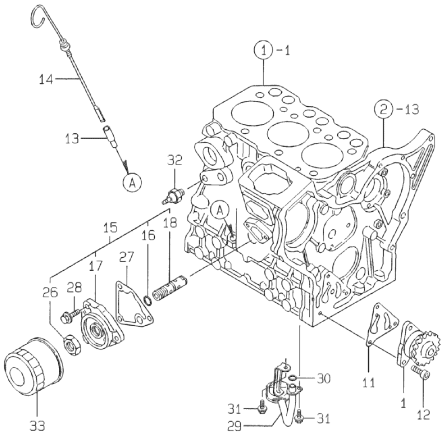

(A)=3TNE74-LW (D)=
(B)= (E)=
(C)= (F)=

No.	Lev.	Parts No.	Description	Q'ty (A)	(B)	(C)	(D)	(E)	(F)	I	R
1	1	119660-32001	PUMP ASSY, OIL	1							
11	1	119660-32020	GASKET, PUMP	1							
12	1	26450-060202	BOLT, M6X 20	3							
13	1	121520-34810	GUIDE, DIPSTICK	1							
14	1	119600-34820	DIPSTICK, OIL	1							
15	1	119609-35000	BRACKET ASSY, FILTER	1							
16	2	119609-32040	O-RING, P16	1							
17	2	119660-35102	BRACKET, FILTER	1							
18	2	119609-35300	VALVE ASSY, CONTROL	1							
26	2	129150-35350	NUT	1							
27	1	119660-35113	GASKET	1							
28	1	26106-080202	BOLT, M8X 20 PLATED	3							
29	1	119600-35091	PIPE ASSY, OIL INLET	1							
30	1	119209-35030	O-RING, P11	1							
31	1	26106-060102	BOLT, M6X 10 PLATED	2							
32	1	114250-39450	SWITCH, 0.5KG	1							
33	1	119305-35150	FILTER, OIL	1							

N:Old ←Yes/No→ New. Q:Old ←No/Yes→ New. R:Old ←Yes/Yes→ New. S:Old ←No/No→ New. W:Add. Z:Discontinued. F:Interchangeable by set. K:Q'ty Change

Copyright (C) YANMAR CO., LTD. All RightsReserved.

0CV10-M84300

Fig.10. COOLING WATER SYSTEM

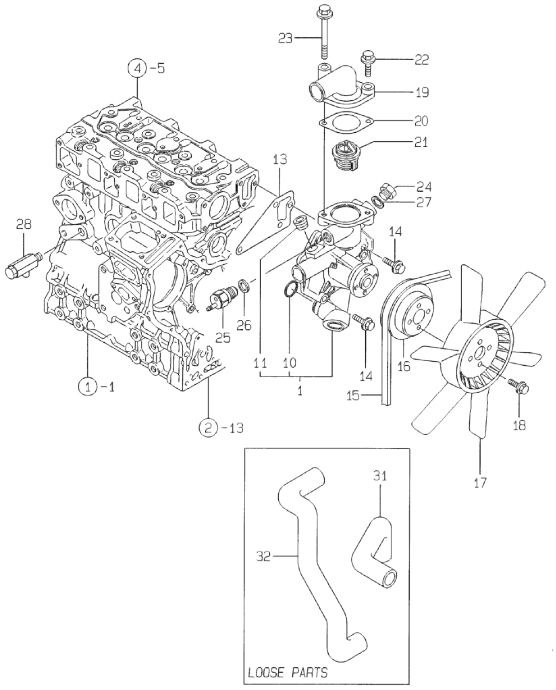

(A)=3TNE74-LW (D)=
(B)= (E)=
(C)= (F)=

No.	Lev.	Parts No.	Description	Q'ty (A)	(B)	(C)	(D)	(E)	(F)	I	R
1	1	119660-42007	PUMP ASSY, WATER	1							
10	2	119609-42320	O-RING	1							
11	2	23876-030000	PLUG, R03	1							
13	1	119620-42021	GASKET, WATER PUMP	1							
14	1	26106-080452	BOLT, M8X 45 PLATED	4							
15	1	119656-42290	V-BELT, FM35.5	1							
16	1	119660-42350	V-PULLEY	1							
17	1	121465-44740	FAN, COOLING	1							
18	1	26106-060122	BOLT, M6X 12 PLATED	1							
19	1	124101-49531	COVER, THERMOSTAT	1							
20	1	129350-49541	GASKET	1							
21	1	129350-49800	THERMOSTAT, 71	1							
22	1	26106-080282	BOLT, M8X 28 PLATED	1							
23	1	26106-080652	BOLT, M8X 65 PLATED	1							
24	1	121450-42450	PLUG, M16	1							
25	1	121250-44901	SWITCH, 110	1							
26	1	124465-44950	GASKET, 16	1							
27	1	124465-44950	GASKET, 16	1							
28	1	119620-49290	COCK ASSY, 1/4	1							
31	1	119645-49010	PIPE, WATER	1							
32	1	119645-49020	PIPE, WATER	1							

N:Old ◄Yes/No► New. Q:Old ◄No/Yes► New. R:Old ◄Yes/Yes► New. S:Old ◄No/No► New. W:Add. Z:Discontinued. F:Interchangeable by set. K:Q'ty Change

Copyright (C) YANMAR CO., LTD. All RightsReserved.

0CV10-M84300

Fig.11. FUEL INJECTION PUMP

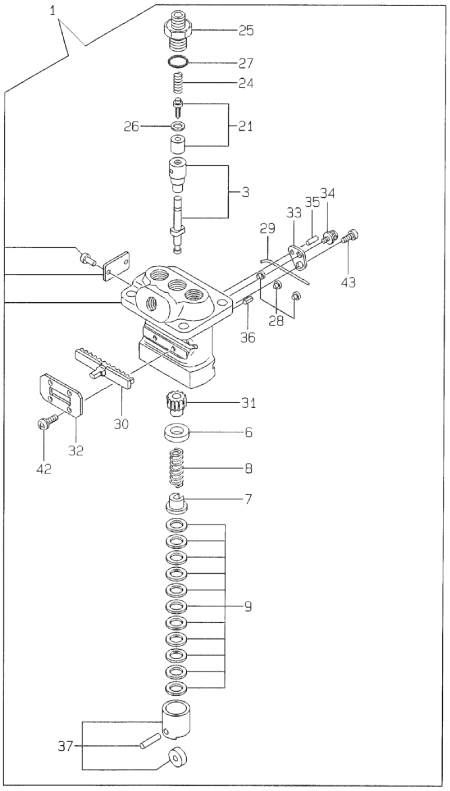

(A)=3TNE74-LW (D)=
(B)= (E)=
(C)= (F)=

No.	Lev.	Parts No.	Description	Q'ty (A)	(B)	(C)	(D)	(E)	(F)	I	R
1	1	719624-51100	PUMP ASSY, INJECTION	1							
3	2	119620-51101	PLUNGER ASSY	3							
6	2	119620-51170	RETAINER, SPRING A	3							
7	2	119620-51180	RETAINER, SPRING B	3							
8	2	119620-51190	SPRING, PLUNGER	3							
9	2	119620-51250	SHIM SET	3							
21	2	119620-51300	VALVE ASSY, DELIVERY	3							
24	2	105546-51330	SPRING, DELIVERY	3							
25	2	119620-51340	HOLDER, DELIVERY	3							
26	2	119620-51350	GASKET	3							
27	2	119620-51370	O-RING	3							
28	2	119620-51450	PIECE	3							
29	2	119620-51461	PIN	1							
30	2	119660-51500	RACK, CONTROL	1							
31	2	119620-51510	PINION	3							
32	2	119660-51530	RETAINER, RACK	1							
33	2	119620-51650	PLATE	2							
34	2	119620-51660	SCREW	2							
35	2	119620-51670	PIN	2							
36	2	119620-51680	PIN	1							
37	2	119620-51700	TAPPET ASSY	3							
42	2	26022-040082	SCREW, M4X 8	4							
43	2	26033-040102	SCREW, M4X10	2							

N:Old ←Yes/No→ New. Q:Old ←No/Yes→ New. R:Old ←Yes/Yes→ New. S:Old ←No/No→ New. W:Add. Z:Discontinued. F:Interchangeable by set. K:Q'ty Change

Copyright (C) YANMAR CO., LTD. All RightsReserved.

0CV10-M84300

Fig.12. GOVERNOR

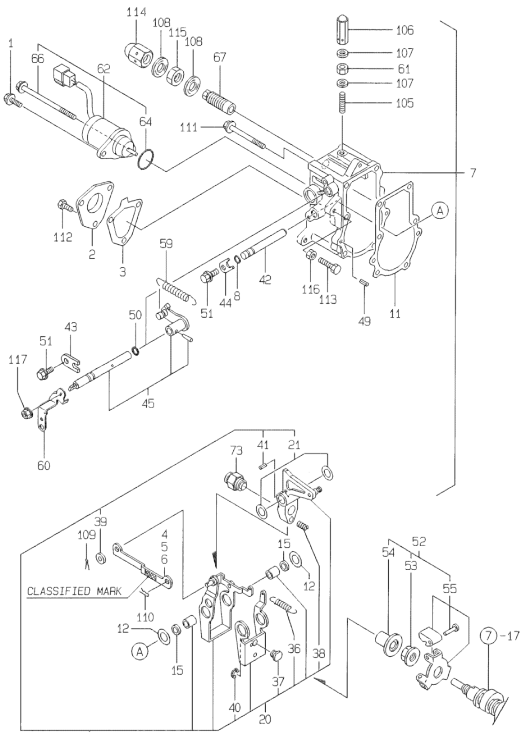

(A)=3TNE74-LW (D)=
(B)= (E)=
(C)= (F)=

No.	Lev.	Parts No.	Description	Q'ty (A)	(B)	(C)	(D)	(E)	(F)	I	R
1	1	121465-59950	BOLT, M6X16	1							
2	1	119660-61060	COVER, GOVERNOR CASE	1							
3	1	119660-61071	GASKET	1							
4	1	119660-61121	LINK, NO MARK	1							1
5	1	119660-61140	LINK, MARK :2	1							1
6	1	119660-61150	LINK, MARK :3	1							1
7	1	119632-61200	CASE ASSY, GOVERNOR	1							
8	2	129155-51280	O-RING, S6	1							
11	2	119660-61052	GASKET	1							
12	2	119660-61460	SHIM SET	1							
15	2	129155-61480	SPACER ASSY	2							
20	2	119232-61510	LEVER ASSY, GOVERNOR	1							
21	3	174307-51700	SHIM SET	2							
36	3	119232-61540	SPRING	1							
37	3	119600-61541	SHIFTER	1							
38	3	119660-61651	SPRING, STARTING	1							
39	3	22117-040000	WASHER, 4	1							
40	3	22272-000040	RING, E- 4	1							
41	3	22351-030014	PIN, SPRING 3.0X14	1							
42	2	119660-61590	SHAFT	1							
43	2	119600-61900	RETAINER, SHAFT	1							
44	2	119660-61901	RETAINER, SHAFT	1							
45	2	119285-66080	SHAFT ASSY	1							
49	2	22351-040010	PIN, SPRING 4.0X10	2							
50	2	24341-000070	O-RING, 1AS7.0	1							
51	2	26106-060102	BOLT, M6X 10 PLATED	2							
52	1	119600-61100	DRIVE ASSY	1							
53	2	119660-61300	NUT	1							
54	2	119660-61341	SLEEVE	1							
55	2	119600-61200	WEIGHT ASSY,GOVERNOR	1							
59	1	119260-66010	SPRING, REGULATOR	1							
60	1	119621-66051	LEVER, REGULATOR	1							
61	1	124550-66370	NUT, M6	1							
62	1	119653-66500	STOPPER ASSY	1							
64	2	24341-000280	O-RING, 1AS28.0	1							
66	2	119620-01530	BOLT	1							
67	1	119600-66530	LIMITER ASSY, FUEL	1							
73	1	119610-66700	ANGLEICH ASSY	1							
105	1	121575-66830	SCREW	1							
106	1	119600-66840	NUT, CAP	1							
107	1	22190-060003	SEAL WASER 6	2							
108	1	22190-120002	WASHER, SEAL 12	2							
109	1	22360-040000	PIN, SNAP 4	1							
110	1	22360-060000	PIN, SNAP 6	1							
111	1	26106-060702	BOLT, M6X 70 PLATED	5							
112	1	26116-050102	BOLT, M5X 10 PLATED	3							
113	1	26116-060304	BOLT, M6X 30 PLATED	1							
114	1	26687-120002	NUT, CAP M12	1							
115	1	26736-120002	NUT, M12	1							
116	1	26756-060002	NUT, LOCK M6	1							
117	1	26366-080002	NUT, M8	1							

Remarks
(1) SELECTIVE PARTS: CERTAIN THE CLASSIFICATION MARK, THEN PLACE YOUR ORDER(REFER TO ILLUSTRATION)

N:Old ←Yes/No→ New. Q:Old ←No/Yes→ New. R:Old ←Yes/Yes→ New. S:Old ←No/No→ New. W:Add. Z:Discontinued. F:Interchangeable by set. K:Q'ty Change

++ CONTINUE ++

Copyright (C) YANMAR CO., LTD. All RightsReserved.

0CV10-M84300

Fig.12. GOVERNOR

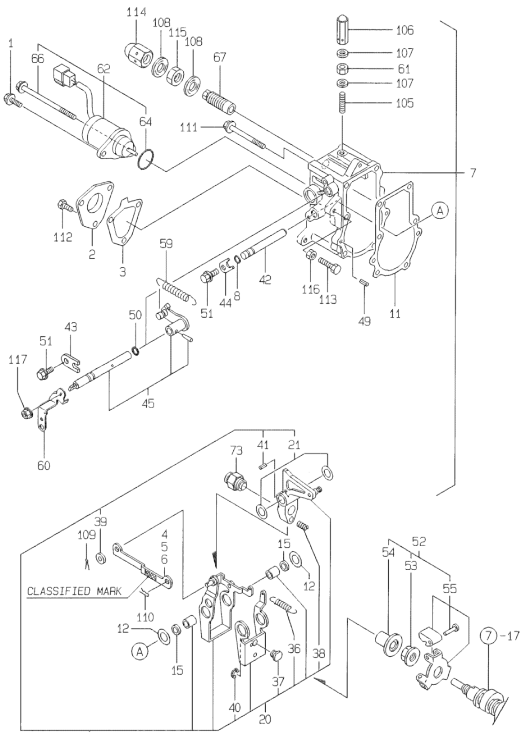

Remarks
(1) SELECTIVE PARTS: CERTAIN THE CLASSIFICATION MARK, THEN PLACE YOUR ORDER(REFER TO ILLUSTRATION)

(A)=3TNE74-LW (D)=
(B)= (E)=
(C)= (F)=

No.	Lev.	Parts No.	Description	Q'ty (A)	(B)	(C)	(D)	(E)	(F)	I	R
119	1	124250-03640	SCREW	1							

N:Old ←Yes/No→ New. Q:Old ←No/Yes→ New. R:Old ←Yes/Yes→ New. S:Old ←No/No→ New. W:Add. Z:Discontinued. F:Interchangeable by set. K:Q'ty Change

Copyright (C) YANMAR CO., LTD. All RightsReserved.

0CV10-M84300

Fig.13. FUEL INJECTION VALVE

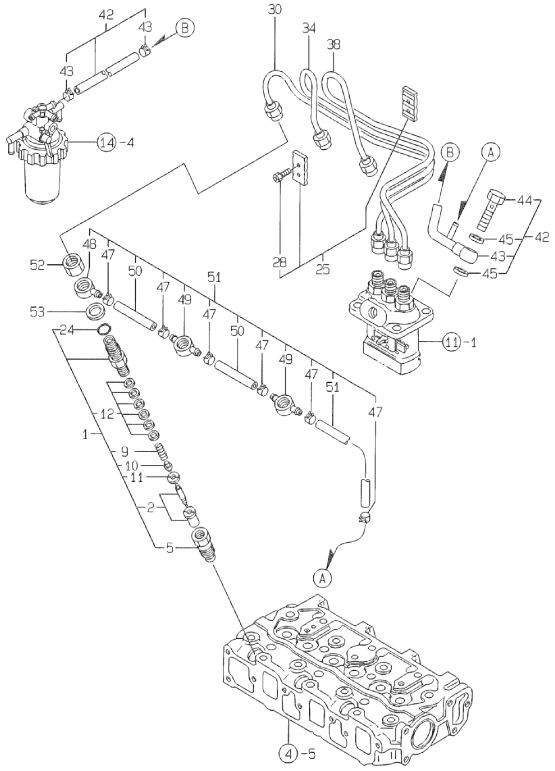

(A)=3TNE74-LW (D)=
(B)= (E)=
(C)= (F)=

No.	Lev.	Parts No.	Description	Q'ty (A)	(B)	(C)	(D)	(E)	(F)	I	R
1	1	719255-53100	VALVE ASSY,INJECTION	3							
2	2	119620-53000	VALVE ASSY,INJECTION	3							
5	2	119620-53080	NUT, NOZZLE	3							
9	2	119620-53120	SPRING, NOZZLE	3							
10	2	114250-53130	SEAT, SPRING	3							
11	2	119620-53140	SPACER, VALVE STOP	3							
12	2	114250-53400	SHIM SET	3							
24	2	129155-61830	O-RING, S10	3							
25	1	129150-59120	RETAINER, PIPE	1							
28	2	129150-59131	BOLT, M4X14	2							
30	1	119620-59811	PIPE ASSY, INJECTION	1							
34	1	119620-59821	PIPE ASSY, INJECTION	1							
38	1	119620-59831	PIPE ASSY, INJECTION	1							
42	1	119356-59500	JOINT ASSY, PIPE	1							
43	2	119356-59571	JOINT, OVER FLOW	1							
44	2	119266-59580	BOLT, PIPE JOINT M8	1							
45	2	22190-080002	WASHER, SEAL 6	2							
46	1	119266-59540	PIPE ASSY, FUEL	1							
47	2	124066-59100	CLIP, HOSE 8	6							
48	2	119260-59520	JOINT	1							
49	2	119260-59530	JOINT	2							
50	2	105025-59550	PIPE, FUEL RETURN	2							
51	2	119000-59560	PIPE, FUEL RETURN	1							
52	1	119620-59700	NUT, NOZZLE	3							
53	1	22190-140002	WASHER, SEAL 14	3							

N:Old ←Yes/No→ New. Q:Old ←No/Yes→ New. R:Old ←Yes/Yes→ New. S:Old ←No/No→ New. W:Add. Z:Discontinued. F:Interchangeable by set. K:Q'ty Change

Copyright (C) YANMAR CO., LTD. All RightsReserved.

0CV10-M84300

Fig.14. FUEL LINE

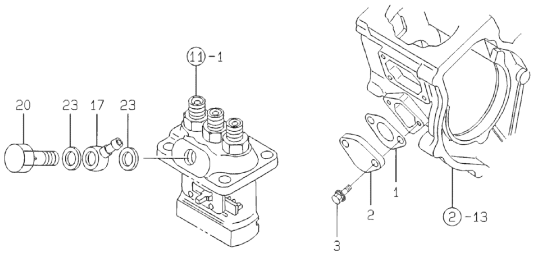

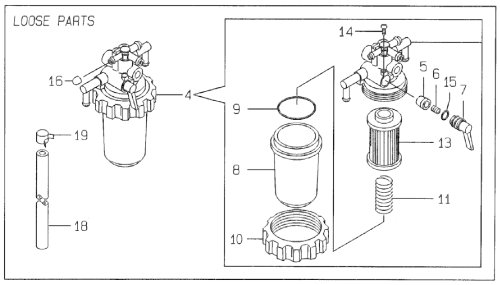

(A)=3TNE74-LW (D)=
(B)= (E)=
(C)= (F)=

No.	Lev.	Parts No.	Description	Q'ty (A)	(B)	(C)	(D)	(E)	(F)	I	R
1	1	121520-01851	GASKET	1							
2	1	121520-01860	COVER	1							
3	1	26106-060162	BOLT, M6X 16 PLATED	2							
4	1	119632-55620	FILTER ASSY, FUEL	1							
5	2	104200-55321	VALVE, TAPER	1							
6	2	104200-55330	SPRING, VALVE	1							
7	2	119810-55340	LEVER	1							
8	2	121254-55510	COVER	1							
9	2	102103-55520	O-RING	1							
10	2	110250-55610	RING, RETAINING	1							
11	2	121250-55620	SPRING	1							
13	2	124550-55700	FILTER, FUEL L=90	1							
14	2	104200-55750	SCREW, M4	1							
15	2	24311-240100	O-RING, 1AP10A	1							
16	1	129150-59580	CAP	1							
17	1	101304-59020	JOINT, PIPE 12	1							
18	1	105225-59520	PIPE, FUEL	1							
19	1	124766-59050	CLIP, HOSE 12	8							
20	1	105340-59190	BOLT ASSY, JOINT	1							
23	1	22190-120002	WASHER, SEAL 12	2							

N:Old ←Yes/No→ New. Q:Old ←No/Yes→ New. R:Old ←Yes/Yes→ New. S:Old ←No/No→ New. W:Add. Z:Discontinued. F:Interchangeable by set. K:Q'ty Change

Copyright (C) YANMAR CO., LTD. All RightsReserved.

0CV10-M84300

Fig.15. STARTING MOTOR

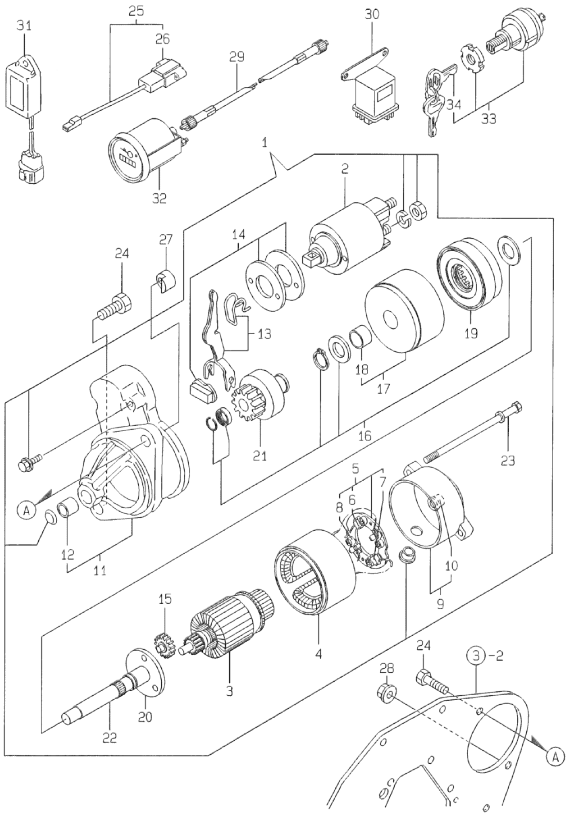

(A)=3TNE74-LW (D)=
(B)= (E)=
(C)= (F)=

No.	Lev.	Parts No.	Description	Q'ty (A)	(B)	(C)	(D)	(E)	(F)	I	R
1	1	129608-77010	STARTER, S114-817A	1							
2	2	129698-77020	MAGNETIC SWITCH ASSY	1							
3	2	129698-77101	ARMATURE ASSY	1							
4	2	129608-77110	YOKE ASSY	1							
5	2	129698-77120	HOLDER ASSY, BRUSH	1							
6	3	129698-77140	BRUSH(+) SET	1							
7	3	129698-77130	BRUSH (-)	2							
8	3	129698-77150	SPRING, BRUSH	4							
9	2	129698-77161	COVER ASSY	1							
10	3	129698-77170	BEARING	1							
11	2	129698-77260	HOUSING ASSY, GEARS	1							
12	3	X2114535200	METAL, STARTER	1							
13	2	129698-77270	LEVER SET, SHIFT	1							
14	2	129698-77280	COVER KIT	1							
15	2	129698-77240	GEAR	3							
16	2	129698-77250	WASHER SET	1							
17	2	129698-77180	BRACKET	1							
18	3	129698-77190	BRACKET	1							
19	2	129698-77200	GEAR, INTERNAL	1							
20	2	129698-77210	BRACKET	1							
21	2	129698-77220	PINION ASSY	1							
22	2	129698-77230	SHAFT(PINION	1							
23	2	124195-77770	THROUGH BOLT	2							
24	1	26156-120302	BOLT, M12X 30 PLATED	2							
25	1	129052-77951	CONNECTOR, STARTER	1							
26	2	129052-77960	HOUSING	1							
27	1	119285-77050	NUT	1							
28	1	26376-120002	NUT, M12	1							
29	1	194145-56901	CABLE, HOUR-METER	1							
30	1	119650-77910	RELAY ASSY, GLOW	1							
31	1	129211-77920	TIMER	1							
32	1	171080-91100	TACHOMETER	1							
33	1	121400-91251	SWITCH, STARTER	1							
34	2	121400-91271	KEY, SWITCH	1							

N:Old ←Yes/No→ New. Q:Old ←No/Yes→ New. R:Old ←Yes/Yes→ New. S:Old ←No/No→ New. W:Add. Z:Discontinued. F:Interchangeable by set. K:Q'ty Change

Copyright (C) YANMAR CO., LTD. All RightsReserved.

0CV10-M84300

Fig.16. GENERATOR

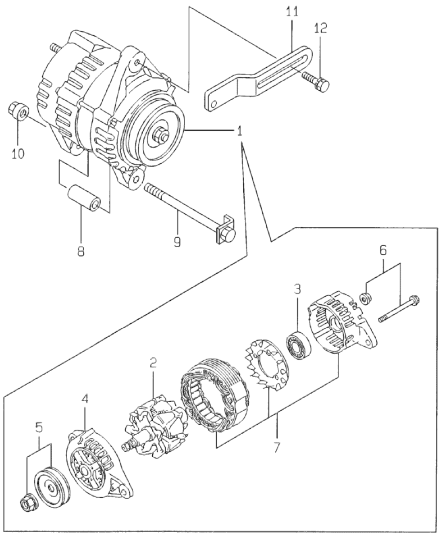

(A)=3TNE74-LW (D)=
(B)= (E)=
(C)= (F)=

No.	Lev.	Parts No.	Description	Q'ty (A)	(B)	(C)	(D)	(E)	(F)	I	R
1	1	119836-77201	GENERATOR (AC)	1							
2	2	129612-77700	ROTOR ASSY	1							
3	2	129612-77710	BEARING, BALL	1							
4	2	129612-77730	BRACKET ASSY, FILTER	1							
5	2	129612-77740	PULLEY	1							
6	2	129612-77750	SCREW KIT	1							
7	2	119836-77920	BRACKET ASSY	1							
8	1	119621-77340	PIECE, DISTANCE	1							
9	1	129136-77251	BOLT, M8X110	1							
10	1	129612-77260	NUT, ALTERNATOR	1							
11	1	119660-77330	ADJUSTER	1							
12	1	26106-080182	BOLT, M8X 18 PLATED	1							

N:Old ←Yes/No→ New. Q:Old ←No/Yes→ New. R:Old ←Yes/Yes→ New. S:Old ←No/No→ New. W:Add. Z:Discontinued. F:Interchangeable by set. K:Q'ty Change

Copyright (C) YANMAR CO., LTD. All RightsReserved.

0CV10-M84300

Fig.17. GASKET SET

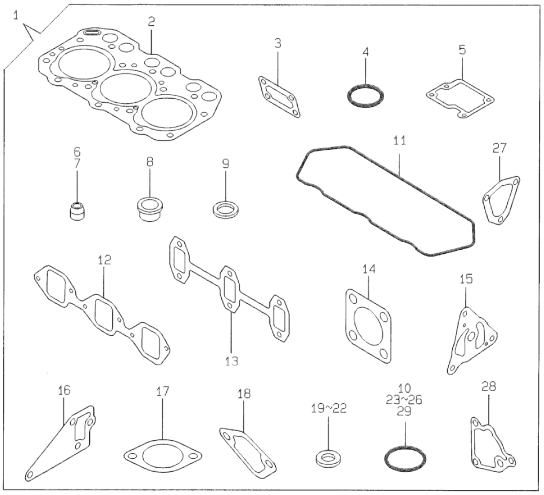

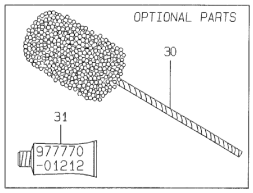

(A)=3TNE74-LW (D)=
(B)= (E)=
(C)= (F)=

No.	Lev.	Parts No.	Description	Q'ty (A)	(B)	(C)	(D)	(E)	(F)	I	R
1	1	719687-92650	GASKET SET	1							1
2	2	119623-01340	GASKET, HEAD	1							
3	2	119660-01562	GASKET	1							
4	2	24311-000320	O-RING, 1AP32.0	3							
5	2	119620-03031	GASKET	1							
6	2	124950-11340	SEAL, VALVE STEM	3							
7	2	124160-11340	SEAL, VALVE STEM	3							
8	2	119600-11450	PROTECTOR, NOZZLE	3							
9	2	119600-11460	GASKET, NOZZLE	6							
10	2	24341-000250	O-RING, 1AS25.0	1							
11	2	119620-11310	GASKET, BONNET	1							
12	2	119620-12111	GASKET, MANIFOLD	1							
13	2	119620-13110	GASKET	1							
14	2	124701-11911	GASKET, SILENCER	1							
15	2	119660-32020	GASKET, PUMP	1							
16	2	119620-42021	GASKET, WATER PUMP	1							
17	2	129350-49541	GASKET	1							
18	2	121520-01851	GASKET	1							
19	2	124465-44950	GASKET, 16	2							
20	2	22190-120002	WASHER, SEAL 12	2							
21	2	22190-140002	WASHER, SEAL 14	3							
22	2	22190-080002	WASHER, SEAL 6	2							
23	2	119624-32040	O-RING, P12.0	2							
24	2	24311-000120	O-RING, 1AP12.0	2							
25	2	119609-32040	O-RING, P16	1							
26	2	24341-000240	O-RING, 1AS24.0	1							
27	2	119660-61071	GASKET	1							
28	2	119660-35113	GASKET	1							
29	2	119209-35030	O-RING, P11	1							
30	1	129400-92410	FLEX HORN	1							1
31	1	977770-01212	GASKET, LIQUID	1							1

Remarks
(1) OPTIONAL PART.

N:Old ←Yes/No→ New. Q:Old ←No/Yes→ New. R:Old ←Yes/Yes→ New. S:Old ←No/No→ New. W:Add. Z:Discontinued. F:Interchangeable by set. K:Q'ty Change

Copyright (C) YANMAR CO., LTD. All RightsReserved.

Parts No. Index

Parts No.	Fig. No.	Ref. No.
101304-59020	14	17
102103-55520	14	9
104200-55321	14	5
104200-55330	14	6
104200-55750	14	14
104207-44480	5	5
104211-11370	4	21
105010-11230	4	32
		36
105025-59550	13	50
105027-12570	5	11
105027-12580	5	12
105225-23200	8	26
105225-59520	14	18
105340-59190	14	20
105546-51330	11	24
110250-55610	14	10
114250-39450	9	32
114250-53130	13	10
114250-53400	13	12
114399-22300	8	20
118400-03060	4	49
119000-59560	13	51
119131-18320	6	5
119209-35030	9	30
	17	29
119232-61510	12	20
119232-61540	12	36
119233-12540	5	8
119233-12670	5	13
119260-07900	4	2
119260-59520	13	48
119260-59530	13	49
119260-66010	12	59
119266-59540	13	46
119266-59580	13	44
119285-01580	3	18
119285-01600	3	2
119285-01730	5	3
119285-66080	12	45
119285-77050	15	27
119305-35150	9	33
119356-59500	13	42
119356-59571	13	43
119600-01050	1	9
119600-01722	3	10
119600-11450	4	23
	17	8
119600-11460	4	24
	17	9

Parts No.	Fig. No.	Ref. No.
119600-13100	6	1
119600-34820	9	14
119600-35091	9	29
119600-61100	12	52
119600-61200	12	55
119600-61541	12	37
119600-61900	12	43
119600-66530	12	67
119600-66840	12	106
119609-32040	9	16
	17	25
119609-35000	9	15
119609-35300	9	18
119609-42320	10	10
119610-01490	2	13
119610-01590	2	1
119610-66700	12	73
119620-01200	1	23
119620-01530	12	66
119620-01620	3	5
119620-01800	2	3
119620-02020	1	11
119620-02450	7	4
119620-03020	4	45
119620-03031	4	46
	17	5
119620-11110	4	15
119620-11120	4	16
119620-11180	4	17
119620-11200	4	25
119620-11240	4	26
119620-11260	4	29
119620-11280	4	30
119620-11310	4	48
	17	11
119620-11350	4	41
119620-11801	4	8
119620-12111	17	12
119620-13110	6	2
	17	13
119620-14100	7	6
119620-14200	7	1
119620-14401	7	2
119620-21500	8	10
119620-21941	8	9
119620-23910	8	24
119620-25102	7	10
119620-25912	7	12
119620-42021	10	13
	17	16

Parts No.	Fig. No.	Ref. No.
119620-49290	10	28
119620-51101	11	3
119620-51170	11	6
119620-51180	11	7
119620-51190	11	8
119620-51250	11	9
119620-51300	11	21
119620-51340	11	25
119620-51350	11	26
119620-51370	11	27
119620-51450	11	28
119620-51461	11	29
119620-51510	11	31
119620-51650	11	33
119620-51660	11	34
119620-51670	11	35
119620-51680	11	36
119620-51700	11	37
119620-53000	13	2
119620-53080	13	5
119620-53120	13	9
119620-53140	13	11
119620-59700	13	52
119620-59811	13	30
119620-59821	13	34
119620-59831	13	38
119620-77820	4	54
119621-21680	8	8
119621-66051	12	60
119621-77340	16	8
119623-01250	1	10
119623-01340	1	24
	17	2
119623-01950	2	21
119623-11100	4	14
119623-21700	8	1
119623-22080	8	14
119623-22500	8	16
119623-22900	8	29
119623-22950	8	31
119624-02410	1	21
119624-32040	2	5
	17	23
119629-14580	7	3
119632-12211	5	14
119632-55620	14	4
119632-61200	12	7
119644-21200	8	4
119645-49010	10	31
119645-49020	10	32

Parts No.	Fig. No.	Ref. No.
119650-77910	15	30
119653-21650	8	7
119653-66500	12	62
119655-12560	5	10
119656-42290	10	15
119660-01510	2	15
119660-01551	2	18
119660-01562	2	19
	17	3
119660-01570	2	20
119660-01640	3	6
119660-01821	7	16
119660-01911	2	4
119660-12111	5	1
119660-25022	7	8
119660-25052	7	9
119660-32001	9	1
119660-32020	9	11
	17	15
119660-35102	9	17
119660-35113	9	27
	17	28
119660-42007	10	1
119660-42350	10	16
119660-51500	11	30
119660-51530	11	32
119660-61052	12	11
119660-61060	12	2
119660-61071	12	3
	17	27
119660-61121	12	4
119660-61140	12	5
119660-61150	12	6
119660-61300	12	53
119660-61341	12	54
119660-61460	12	12
119660-61590	12	42
119660-61651	12	38
119660-61901	12	44
119660-77330	16	11
119685-01740	3	15
119685-03140	4	1
119685-12731	5	2
119687-21590	8	11
119808-12540	5	9
119810-55340	14	7
119836-77201	16	1
119836-77920	16	7
121250-44901	10	25
121250-55620	14	11

Parts No. Index

Parts No.	Fig. No.	Ref. No.
121254-55510	14	8
121400-91251	15	33
121400-91271	15	34
121450-01560	2	16
121450-42450	10	24
121465-44740	10	17
121465-59950	12	1
121520-01851	14	1
	17	18
121520-01860	14	2
121520-34810	9	13
121575-66830	12	105
124060-21600	8	13
124066-59100	13	47
124085-02220	3	8
124101-49531	10	19
124160-01751	2	11
	4	61
124160-11340	4	19
	17	7
124160-11360	4	55
124195-77770	15	23
124250-03640	12	119
124465-44950	10	26
		27
	17	19
124550-55700	14	13
124550-66370	12	61
124701-11911	6	7
	17	14
124766-59050	14	19
124950-11340	4	20
	17	6
129052-77951	15	25
129052-77960	15	26
129100-01580	3	1
	8	2
129100-01760	3	11
129136-77251	16	9
129150-35350	9	26
129150-59120	13	25
129150-59131	13	28
129150-59580	14	16
129150-91400	2	33
129155-51280	12	8
129155-61480	12	15
129155-61830	13	24
129155-77800	4	57
129211-77920	15	31
129350-49541	10	20

Parts No.	Fig. No.	Ref. No.
129350-49541	17	17
129350-49800	10	21
129400-92410	17	30
129608-77010	15	1
129608-77110	15	4
129612-77260	16	10
129612-77700	16	2
129612-77710	16	3
129612-77730	16	4
129612-77740	16	5
129612-77750	16	6
129698-77020	15	2
129698-77101	15	3
129698-77120	15	5
129698-77130	15	7
129698-77140	15	6
129698-77150	15	8
129698-77161	15	9
129698-77170	15	10
129698-77180	15	17
129698-77190	15	18
129698-77200	15	19
129698-77210	15	20
129698-77220	15	21
129698-77230	15	22
129698-77240	15	15
129698-77250	15	16
129698-77260	15	11
129698-77270	15	13
129698-77280	15	14
171008-03990	4	53
171080-91100	15	32
171301-01640	3	12
174307-51700	12	21
194145-56901	15	29
194990-22050	2	30
22117-040000	12	39
22190-060003	12	107
22190-080002	13	45
	17	22
22190-120002	12	108
	14	23
	17	20
22190-140002	13	53
	17	21
22242-000120	4	39
22242-000200	7	14
22252-000210	8	21
22272-000040	12	40
22351-030012	8	37

Parts No.	Fig. No.	Ref. No.
22351-030014	12	41
22351-040010	2	17
	12	49
22351-060012	4	22
22360-040000	12	109
22360-060000	12	110
22512-040120	7	7
		20
	8	5
22857-500100	4	51
23876-010000	1	12
23876-020000	4	11
23876-030000	10	11
24101-062034	7	22
24102-063034	7	21
24311-000120	4	56
	17	24
24311-000320	2	12
	4	62
	17	4
24311-240100	14	15
24341-000070	12	50
24341-000240	2	35
	17	26
24341-000250	3	14
	17	10
24341-000280	12	64
26022-040082	11	42
26033-040102	11	43
26106-060102	9	31
	12	51
26106-060122	1	22
	7	15
	10	18
26106-060162	2	6
		32
	7	23
	14	3
26106-060182	5	6
26106-060202	3	19
26106-060222	3	9
26106-060302	2	7
26106-060452	3	16
	5	7
26106-060502	3	17
26106-060552	3	20
26106-060602	2	8
		9
26106-060702	12	111
26106-060802	2	10

Parts No.	Fig. No.	Ref. No.
26106-080102	3	21
26106-080142	4	3
		4
26106-080182	16	12
26106-080202	9	28
26106-080282	10	22
26106-080402	6	4
26106-080452	4	42
	10	14
26106-080652	10	23
26116-050102	12	112
26116-060304	12	113
26156-120302	15	24
26206-100202	3	3
26206-100252	3	4
26216-080552	6	6
26306-080002	4	43
	6	3
26366-060002	2	31
26366-080002	12	117
26376-120002	15	28
26450-060202	9	12
26587-080102	7	24
26687-120002	12	114
26736-120002	12	115
26756-060002	12	116
26856-060002	4	34
		38
26979-050162	4	40
27221-050080	4	12
27241-120000	1	13
27241-300000	1	14
27241-400000	4	13
27310-070001	4	18
719255-53100	13	1
719620-02800	1	15
719620-02870	1	25
719620-02930	1	18
719620-11521	4	44
719620-11650	4	31
719620-11660	4	35
719620-23100	8	22
719620-23600	8	38
719620-23610	8	35
719623-01560	1	1
719623-11700	4	5
719624-51100	11	1
719660-14590	7	17
719687-92650	17	1
977770-01212	2	36

Parts No. Index

Parts No.	Fig. No.	Ref. No.
977770-01212	3	22
	17	31
X2114535200	15	12

Parts No.	Fig. No.	Ref. No.

Parts No.	Fig. No.	Ref. No.

Parts No.	Fig. No.	Ref. No.