YANMAR

PARTS CATALOG

0CE10-M26900EN

Last update Mar., 2016

PREFACE

1. This parts catalog is the 1st edition of Yanmar diesel engine 3TNE68 - GH~4TNE84T - GH.

Pub. No. : 000Y00E2690

Published : Oct., 1997

2. Model name

SECTION	ENGINE MODEL	Fig. No.	GENERATOR MODEL	
I	3TNE68 - GH	1 ~ 20	YAP15G	TYGP - 15G
II	3TNE78A - GH	21 ~ 40	YAP24G	TYGP - 24G
III	3TNE84 - GH	41 ~ 60	YAP30G	TYGP - 30G
IV	3TNE84T - GH	61 ~ 82	YAP35G	TYGP - 35G
V	4TNE84T - GH	83 ~ 104	YAP47G	TYGP - 47G

3. Your understanding is asking that this parts catalog is not a technical data manual setting forth as servicing procedures, This parts catalog is using simplified illustration. Be sure to use Yanmar Genuine Parts in your maintenance servicing of Yanmar products. Be careful not to use the simple parts available in the market ; otherwise their use in repairing causes such as an early breakage, for instance.

Directions for the Parts Catalog.

1.This Parts Catalog shows both standard and optional parts.
2.Parts may change without prior notice.
3.The following is an example of the Parts Catalog format.

0CF10-G21601 29. FUEL INJECTION PUMP(W/BOOST)

(A)=4JH-DT
(B)=4JH-DTZ
(C)=4JH-DTZP
(D)=4JH-DTZA
(E)=4JH-DTZY
(F)=

① REF.	② LEV.	PARTS NO.	DESCRIPTION	Q'TY (A)	(B)	(C)	(D)	(E)	(F)	③ I	⑤ R
1	1	729595-51390	FUEL INJECTION PUMP	1	1	1	1	1			1
1-1	1	729595-51391	FUEL INJECTION PUMP	1	1	1	1	1		N	1
	(A=E00185)	(B=E00200)									
3	2	26022-060162	SCREW M 6X 16	9	9	9	9	9			
3-1 ④	2	26022-060162	SCREW M 6X 16	4	4	4	4	4		K	
	(A=E00156)	(B=E00156)	(C=E00156) (D=E00156)	(E=E00156)							
4	2	129470-51040	CAMSHAFT	1	1	1	1	1			
5	2	122710-51050	BEARING, ROLLER	2	2	2	2	2			
6	2	129470-51060	RETAINER	1	1	1	1	1			

Remarks
(1) BOOST COMPEMSATOR TYPE. OPTIONAL PART, TO E00155,(4JH-DT, 4JH-DTZ

①Ref. No.

The Ref. No. listed may not be in accordance with the illustration Ref. No.

(Ex.) Illustration No. 1 List Ref No. 1 (Before change) → 1- 1 (After change)

For interchangeable symbols N, R and K, illustrations for new parts may be abbreviated.

②Lev. (Level)

Level indication
The numbers below indicate the level of relativity towards the main part.
1 ----- Main parts (Assembly parts)
2 ----- Sub component included in " 1 ".
3 ----- Sub component included in " 2 ".
Note) Parts that are not for sale are partially illustrated but not listed.

③Interchangeability Symbol

When a part change takes place, one of the following interchangeability symbols is indicated beside the part.

Symbol	Interchangeability	Contents note
N	Old ← Yes / No → New	New Part is interchangeable for Old Part but Old Part is not interchangeable for New Part.
Q	Old ← No / Yes → New	New Part is not interchangeable for Old Part but Old Part is interchangeable for New Part.
R	Old ← Yes / Yes → New	New/ Old Parts are both interchangeable.
S	Old ← No / No → New	New/ Old Parts are both not interchangeable.
W		Part newly added.
Z		Part discontinued.
F		Not interchangeable by a single part but interchangeable together with related parts.
K		Changes only for used parts quantities.

④Effective Machine No.

When a part changes, the effective Machine No. will be indicated in the (A)-(F) column.

Product Symbol	Product No.	Product Symbol	Product No.
C	Clutch No. Compressor No.	F	Machine No. (Agricultural Equip.)
D	Drive No.	M	Machine No.
E	Engine No.		

Note 1) A date may follow the symbol. (Ex.) 1996.01
Note 2) " XXXXX " and " ZZZZZ " are for parts that could not be predicted or for engine models that could not be identified.
Note 3) (A=E00185) is the E (Engine Serial Number) for the column (A) model (in this case 4JH-DT) after the parts design change.

⑤Remarks

Figures or alphabets (symbols) are entered in the remarks column.
The comments (remarks) on parts that are indicated at the bottom of the illustration are the same symbols as those stated above.

Contents

0CE10-M26900

Fig. No. Fig. Name

ENGINE SECTION

1. CYLINDER BLOCK
2. GEAR HOUSING
3. FLYWHEEL HOUSING & OIL SUMP
4. CYLINDER HEAD & BONNET
5. SUCTION MANIFOLD & AIR CLEANER
6. EXHAUST MANIFOLD
7. CAMSHAFT & DRIVING GEAR
8. CRANKSHAFT & PISTON
9. LUB.OIL SYSTEM
10. COOLING WATER SYSTEM
11. FUEL INJECTION PUMP
12. GOVERNOR
13. FUEL FEED PUMP
14. FUEL INJECTION VALVE
15. FUEL FILTER
16. ENGINE STOP DEVICE
17. STARTING MOTOR
18. TENSION PULLEY
19. ELECTRIC PARTS
20. GASKET SET

ENGINE SECTION

21. CYLINDER BLOCK
22. GEAR HOUSING

Fig. No. Fig. Name

23. FLYWHEEL HOUSING & OIL SUMP
24. CYLINDER HEAD & BONNET
25. SUCTION MANIFOLD
26. EXHAUST MANIFOLD
27. CAMSHAFT & DRIVING GEAR
28. CRANKSHAFT & PISTON
29. LUB.OIL SYSTEM
30. COOLING WATER SYSTEM
31. FUEL INJECTION PUMP
32. GOVERNOR
33. FUEL FEED PUMP
34. FUEL INJECTION VALVE
35. FUEL FILTER
36. ENGINE STOP DEVICE
37. STARTING MOTOR
38. TENSION PULLEY
39. ELECTRIC PARTS
40. GASKET SET

ENGINE SECTION

41. CYLINDER BLOCK
42. GEAR HOUSING
43. FLYWHEEL HOUSING &LUB.OIL SUMP
44. CYLINDER HEAD & BONNET
45. SUCTION MANIFOLD

Contents

0CE10-M26900

Fig. No.	Fig. Name
46.	EXHAUST MANIFOLD
47.	CAMSHAFT & DRIVING GEAR
48.	CRANKSHAFT & PISTON
49.	LUB.OIL SYSTEM
50.	COOLING WATER SYSTEM
51.	FUEL INJECTION PUMP
52.	GOVERNOR
53.	FUEL FEED PUMP
54.	FUEL INJECTION VALVE
55.	FUEL FILTER
56.	ENGINE STOP DEVICE
57.	STARTING MOTOR
58.	TENSION PULLEY
59.	ELECTRIC PARTS
60.	GASKET SET

ENGINE SECTION

Fig. No.	Fig. Name
61.	CYLINDER BLOCK
62.	GEAR HOUSING
63.	FLYWHEEL HOUSING &LUB.OIL SUMP
64.	CYLINDER HEAD & BONNET
65.	SUCTION MANIFOLD
66.	EXHAUST MANIFOLD
67.	CAMSHAFT & DRIVING GEAR
68.	TURBINE
69.	CRANKSHAFT & PISTON
70.	LUB.OIL SYSTEM
71.	LUB.OIL LINE
72.	COOLING WATER SYSTEM
73.	FUEL INJECTION PUMP
74.	GOVERNOR
75.	FUEL FEED PUMP
76.	FUEL INJECTION VALVE
77.	FUEL FILTER
78.	ENGINE STOP DEVICE
79.	STARTING MOTOR
80.	TENSION PULLEY
81.	ELECTRIC PARTS
82.	GASKET SET

ENGINE SECTION

Fig. No.	Fig. Name
83.	CYLINDER BLOCK
84.	GEAR HOUSING
85.	FLYWHEEL HOUSING &LUB.OIL SUMP
86.	CYLINDER HEAD & BONNET
87.	SUCTION MANIFOLD
88.	EXHAUST MANIFOLD
89.	CAMSHAFT & DRIVING GEAR
90.	TURBINE
91.	CRANKSHAFT & PISTON

Contents

0CE10-M26900

Fig. No.	Fig. Name
92.	LUB.OIL SYSTEM
93.	LUB.OIL LINE
94.	COOLING WATER SYSTEM
95.	FUEL INJECTION PUMP
96.	GOVERNOR
97.	FUEL FEED PUMP
98.	FUEL INJECTION VALVE
99.	FUEL FILTER
100.	ENGINE STOP DEVICE
101.	STARTING MOTOR
102.	TENSION PULLEY
103.	ELECTRIC PARTS
104.	GASKET SET

Fig. No.	Fig. Name

Fig.1. CYLINDER BLOCK

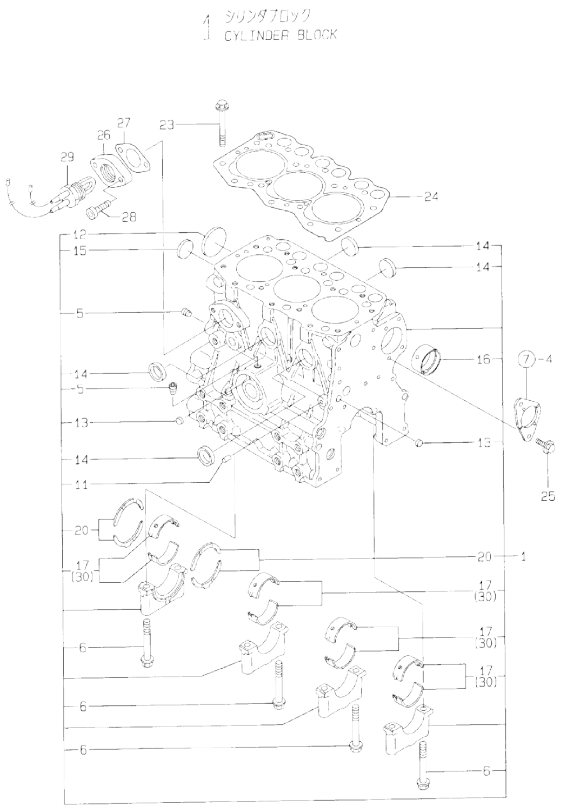

(A)=3TNE68-GH (D)=
(B)= (E)=
(C)= (F)=

No.	Lev.	Parts No.	Description	Q'ty (A)	(B)	(C)	(D)	(E)	(F)	I	R
1	1	719215-01560	BLOCK ASSY, CYLINDER	1							
5	2	124060-01050	PLUG, PT1/8	2							
6	2	119260-02020	BOLT, METAL CAP	8							
11	2	27221-060100	PLUG, 6X10	1							
12	2	27231-400000	PLUG 40	1							
13	2	27241-100000	PLUG, 10	2							
14	2	27241-250000	PLUG, 25	4							
15	2	27241-300000	PLUG 30	1							
16	2	119260-02410	BUSH, CAMSHAFT	1							
16-1	2	119266-02410	BUSH	1						R	
	(A=E27102)										
17	2	719260-02800	BEARING, MAIN	4							
20	2	719260-02930	BEARING, THRUST	2							
23	1	119260-01200	BOLT, HEAD	14							
24	1	119265-01340	GASKET, HEAD	1							
24-1	1	119265-01341	GASKET, HEAD	1						N	
	(A=E21233)										
25	1	26106-060122	BOLT, M6X 12 PLATED	2							
26	1	119621-11950	BRACKET	1							
27	1	119621-11960	GASKET	1							
28	1	26450-080182	BOLT, M8X 18	2							
29	1	46150-504600	HEATER	1							
29-1	1	124097-77900	HEATER,COOLING WATER	1						N	
	(A=E78856)										
30	1	719260-02870	BEARING, 0.25 US	4							1

Remarks
(1) UNDER-SIZE(U.S=0.25)PART.

N:Old $\frac{\text{Yes}}{\text{No}}$ New. Q:Old $\frac{\text{No}}{\text{Yes}}$ New. R:Old $\frac{\text{Yes}}{\text{Yes}}$ New. S:Old $\frac{\text{No}}{\text{No}}$ New. W:Add. Z:Discontinued. F:Interchangeable by set. K:Q'ty Change

Copyright (C) YANMAR CO., LTD. All RightsReserved.

Fig.2. GEAR HOUSING

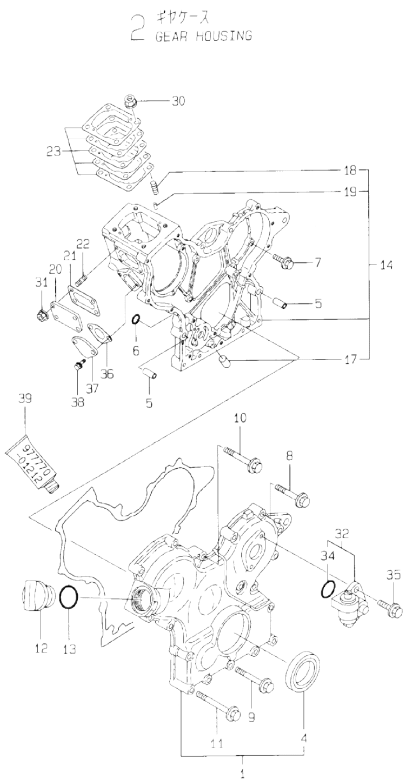

(A)=3TNE68-GH
(B)=
(C)=
(D)=
(E)=
(F)=

No.	Lev.	Parts No.	Description	Q'ty (A)	(B)	(C)	(D)	(E)	(F)	I	R
1	1	119260-01590	COVER ASSY,GEAR CASE	1							
4	2	119620-01800	SEAL, OIL	1							
5	1	119660-01911	PIPE, KNOCK	4							
6	1	24311-000120	O-RING, 1AP12.0	2							
7	1	26106-060162	BOLT, M6X 16 PLATED	5							
8	1	26106-060302	BOLT, M6X 30 PLATED	5							
9	1	26106-060402	BOLT, M6X 40 PLATED	3							
10	1	26106-060502	BOLT, M6X 50 PLATED	4							
11	1	26106-060652	BOLT, M6X 65 PLATED	6							
12	1	124160-01751	COVER, FILLER	1							
13	1	24311-000320	O-RING, 1AP32.0	1							
14	1	119260-01490	CASE ASSY, GEAR	1							
17	2	119260-01510	PLUG	1							
18	2	121450-01560	STUD, M8X22	4							
19	2	22351-040010	PIN, SPRING 4.0X10	2							
20	1	119660-01551	COVER	1							
21	1	119660-01562	GASKET	1							
22	1	119660-01570	STUD, M6X12	4							
23	1	119623-01950	SHIM SET, ADJUSTING	1							
30	1	194990-22050	NUT, M8	4							
31	1	26366-060002	NUT, M6	4							
32	1	129150-91400	GEAR	1							
34	2	24341-000240	O-RING, 1AS24.0	1							
35	1	26106-060162	BOLT, M6X 16 PLATED	2							
36	1	121520-01851	GASKET	1							
37	1	121520-01860	COVER	1							
38	1	26106-060162	BOLT, M6X 16 PLATED	2							
39	1	977770-01212	GASKET, LIQUID	1							1

Remarks
(1) OPTIONAL PART.

N:Old ◄Yes/No► New. Q:Old ◄No/Yes► New. R:Old ◄Yes/Yes► New. S:Old ◄No/No► New. W:Add. Z:Discontinued. F:Interchangeable by set. K:Q'ty Change

Copyright (C) YANMAR CO., LTD. All RightsReserved.

Fig.3. FLYWHEEL HOUSING & OIL SUMP

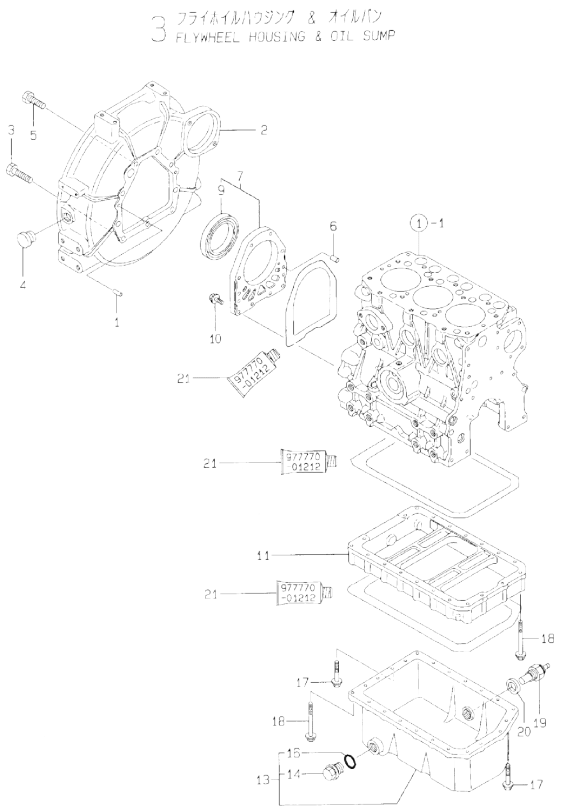

Remarks
(1) OPTIONAL PART.

(A)=3TNE68-GH (D)=
(B)= (E)=
(C)= (F)=

No.	Lev.	Parts No.	Description	Q'ty (A)	(B)	(C)	(D)	(E)	(F)	I	R
1	1	129100-01580	PIN, M8X16	2							
2	1	119600-01600	HOUSING, FLYWHEEL	1							
3	1	121120-01620	BOLT, M10X28	3							
4	1	119620-01750	CAP	1							
5	1	26206-100252	BOLT, M10X 25 PLATED	6							
6	1	119620-01620	PIN, M6X10	2							
7	1	119660-01640	CASE ASSY, OIL SEAL	1							
9	2	124085-02220	SEAL, OIL	1							
10	1	26106-060222	BOLT, M6X 22 PLATED	10							
11	1	119454-01721	SPACER, OIL SUMP	1							
13	1	119248-01770	SUMP ASSY, OIL	1							
14	2	121400-01640	PLUG, 16	1							
16	2	24311-000180	O-RING, 1AP18.0	1							
17	1	26106-060102	BOLT, M6X 10 PLATED	3							
18	1	26106-060452	BOLT, M6X 45 PLATED	20							
19	1	121470-44900	SENSOR	1							
20	1	124465-44950	GASKET, 16	1							
21	1	977770-01212	GASKET, LIQUID	1							1

N:Old ◄Yes/No► New. Q:Old ◄No/Yes► New, R:Old ◄Yes/Yes► New, S:Old ◄No/No► New. W:Add. Z:Discontinued. F:Interchangeable by set. K:Q'ty Change

Copyright (C) YANMAR CO., LTD. All RightsReserved.

Fig.4. CYLINDER HEAD & BONNET

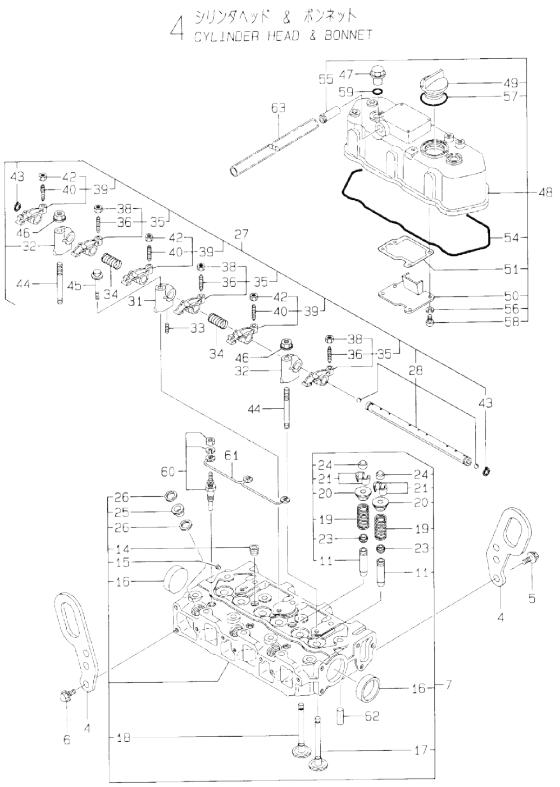

(A)=3TNE68-GH
(B)=
(C)=
(D)=
(E)=
(F)=

No.	Lev.	Parts No.	Description	Q'ty (A)	(B)	(C)	(D)	(E)	(F)	I	R
4	1	119260-07900	LIFTER	2							
5	1	26106-080142	BOLT, M8X 14 PLATED	1							
6	1	26106-080142	BOLT, M8X 14 PLATED	2							
7	1	119265-11700	HEAD ASSY, CYLINDER	1							
11	2	119260-11800	GUIDE, VALVE	6							1
14	2	23871-030000	PLUG, R03	2							
15	2	27221-050080	PLUG, 5X 8	1							
16	2	27241-350000	PLUG, 35	2							
17	2	119260-11100	VALVE, INTAKE	3							
18	2	119260-11110	VALVE, EXHAUST	3							
19	2	114250-11120	SPRING, VALVE	6							
20	2	114250-11180	RETAINER, SPRING	6							
21	2	714250-11570	COTTER ASSY	6							
23	2	119260-11340	SEAL, VALVE STEM	6							
24	2	119260-11370	CAP, VALVE	6							
25	2	119600-11450	PROTECTOR, NOZZLE	3							
26	2	119600-11460	GASKET, NOZZLE	6							
27	1	119260-11200	SUPPORT ASSY, ARM	1							
28	2	119260-11240	SHAFT ASSY, ROCKER	1							
31	2	119260-11260	SUPPORT, ROCKER ARM	1							
32	2	119265-11260	SUPPORT, ROCKER ARM	2							
33	2	119260-11270	SCREW	1							
34	2	119260-11280	SPRING	2							
35	2	719260-11650	ARM ASSY, ROCKER	3							
36	3	105010-11230	SCREW, VALVE ADJUST	3							
38	3	26756-060002	NUT, LOCK M6	3							
39	2	719260-11660	ARM ASSY, ROCKER	3							
40	3	105010-11230	SCREW, VALVE ADJUST	3							
42	3	26756-060002	NUT, LOCK M6	3							
43	2	22242-000100	RING, 10	2							
44	1	119620-11350	STUD	2							
45	1	26106-080452	BOLT, M8X 45 PLATED	1							
46	1	26366-080002	NUT, M8	2							
47	1	124160-11360	KNOB	2							
48	1	719260-11520	BONNET ASSY, HEAD	1							
49	2	124160-01751	COVER, FILLER	1							
50	2	119260-03020	PLATE, SHELTER	1							
51	2	119260-03031	GASKET	1							
54	2	119260-11310	GASKET, BONNET	1							
55	2	119620-11390	JOINT	1							
56	2	22217-050000	WASHER, SPRING 5	4							Z
	(A=E31313)										
57	2	24311-000320	O-RING, 1AP32.0	1							
58	2	26557-050102	SCREW, M5X10	4							
58-1	2	22857-500100	SCREW, 5X10	4							R
	(A=E31313)										
59	1	24311-000120	O-RING, 1AP12.0	2							
60	1	129795-77800	PLUG, GLOW	3							
61	1	119620-77820	CONNECTOR, GLOW PLUG	1							
62	1	22351-060012	PIN, SPRING 6.0X12	2							
63	1	23065-120500	PIPE, 12X 500	1							

Remarks
(1) REPAIR PART.

N:Old $\xleftarrow[\text{No}]{\text{Yes}}$ New. Q:Old $\xleftarrow[\text{Yes}]{\text{No}}$ New. R:Old $\xleftarrow[\text{Yes}]{\text{Yes}}$ New. S:Old $\xleftarrow[\text{No}]{\text{No}}$ New. W:Add. Z:Discontinued. F:Interchangeable by set. K:Q'ty Change

Copyright (C) YANMAR CO., LTD. All RightsReserved.

Fig.5. SUCTION MANIFOLD & AIR CLEANER

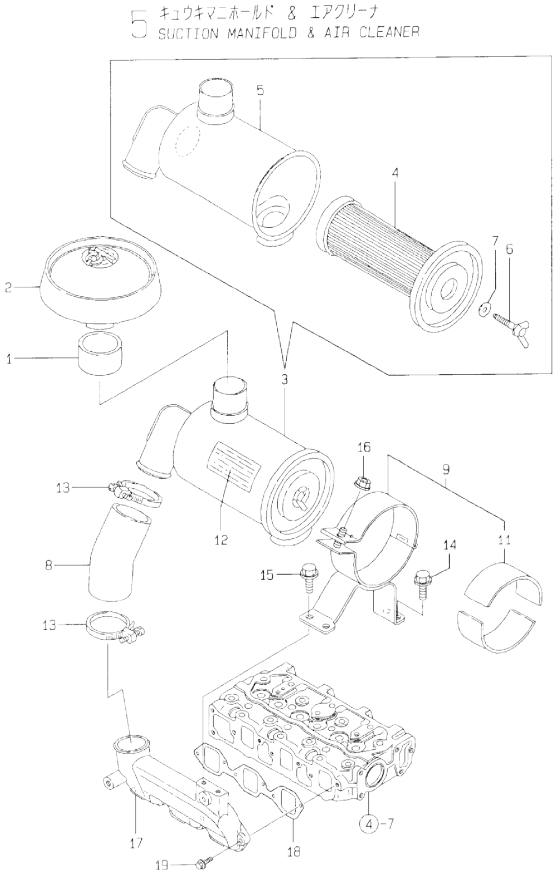

(A)=3TNE68-GH (D)=
(B)= (E)=
(C)= (F)=

No.	Lev.	Parts No.	Description	Q'ty (A)	(B)	(C)	(D)	(E)	(F)	I	R
1	1	119288-12050	JOINT, PIPE	1							
2	1	121521-12400	CAP, RAIN	1							
3	1	119688-12500	CLEANER ASSY, AIR	1							
4	2	119860-12510	ELEMENT	1							
5	2	119688-12540	CASE ASSY, CLEANER	1							
6	2	119860-12550	BOLT	1							
7	2	119860-12560	WASHER, SEAL	1							
8	1	119462-12550	PIPE, AIR INTAKE	1							
9	1	119288-12590	SUPPORT ASSY,CLEANER	1							
11	2	119640-12580	SEAT, RUBBER	2							
12	1	129136-12600	LABEL, AIR CLEANER	1							
13	1	23000-060000	CLAMP, 60	2							
14	1	26106-060122	BOLT, M6X 12 PLATED	2							
15	1	26106-080162	BOLT, M8X 16 PLATED	2							
16	1	26366-060002	NUT, M6	1							
17	1	119288-12100	MANIFOLD, AIR INTAKE	1							
18	1	119260-12111	GASKET, MANIFOLD	1							
19	1	26106-060202	BOLT, M6X 20 PLATED	4							

N:Old ←Yes/No→ New. Q:Old ←No/Yes→ New. R:Old ←Yes/Yes→ New. S:Old ←No/No→ New. W:Add. Z:Discontinued. F:Interchangeable by set. K:Q'ty Change

Copyright (C) YANMAR CO., LTD. All RightsReserved.

Fig.6. EXHAUST MANIFOLD

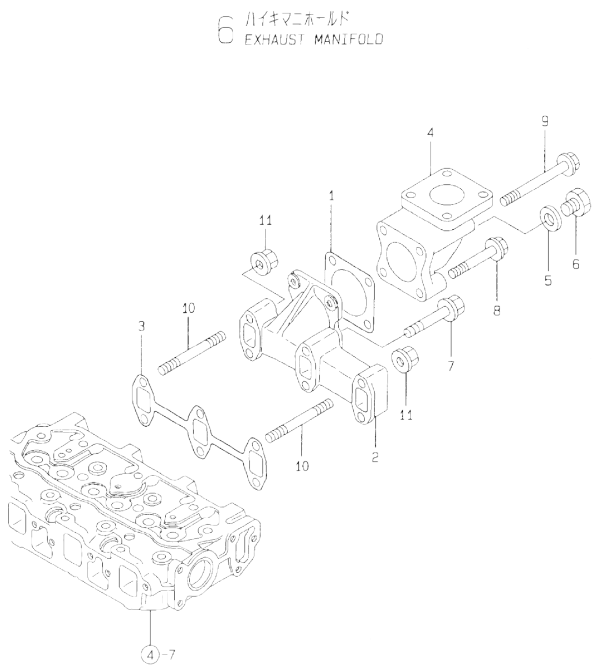

(A)=3TNE68-GH
(B)=
(C)=
(D)=
(E)=
(F)=

No.	Lev.	Parts No.	Description	Q'ty (A)	(B)	(C)	(D)	(E)	(F)	I	R
1	1	124450-11900	GASKET	1							
2	1	119260-13100	MANIFOLD, EXHAUST	1							
3	1	119260-13110	GASKET	1							
4	1	171083-13300	BEND, EXHAUST 50A	1							
5	1	23414-170000	GASKET, 17X1.0	1							
6	1	23894-030002	PLUG, G3/8	1							
7	1	26106-060352	BOLT, M6X 35 PLATED	4							
8	1	26106-080452	BOLT, M8X 45 PLATED	2							
9	1	26106-080952	BOLT, M8X 95 PLATED	2							
10	1	26216-060402	STUD, M6X 40	2							
11	1	26366-060002	NUT, M6	2							

N:Old ←Yes/No→ New. Q:Old ←No/Yes→ New. R:Old ←Yes/Yes→ New. S:Old ←No/No→ New. W:Add. Z:Discontinued. F:Interchangeable by set. K:Q'ty Change

Copyright (C) YANMAR CO., LTD. All RightsReserved.

Fig.7. CAMSHAFT & DRIVING GEAR

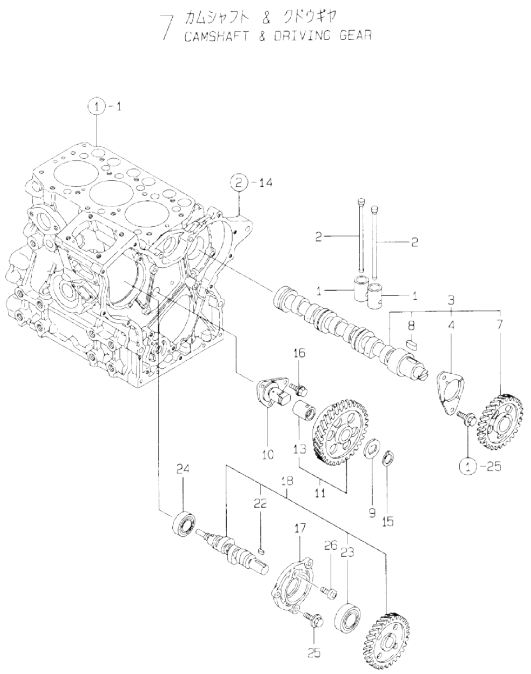

(A)=3TNE68-GH (D)=
(B)= (E)=
(C)= (F)=

No.	Lev.	Parts No.	Description	Q'ty (A)	(B)	(C)	(D)	(E)	(F)	I	R
1	1	119260-14200	TAPPET	6							
2	1	119260-14400	ROD, PUSH	6							
3	1	119260-14580	CAMSHAFT ASSY	1							
4	2	119620-02450	BEARING, THRUST	1							
7	2	119260-14100	GEAR, CAMSHAFT	1							
8	2	22512-040120	KEY, 4X 12	1							
9	1	119660-25022	RETAINER	1							
10	1	119660-25052	SHAFT, IDLE	1							
11	1	119260-25100	GEAR ASSY, IDLE	1							
13	2	119620-25912	BUSH	1							1
15	1	22242-000200	RING, 20	1							
16	1	26106-060122	BOLT, M6X 12 PLATED	3							
17	1	119660-01821	BEARING, FUEL CAM	1							
18	1	119225-14200	CAM ASSY	1							
22	2	22512-040120	KEY, 4X 12	1							
23	2	24102-063034	BEARING, BALL 6303U	1							
24	1	24101-062034	BEARING, BALL 6203	1							
25	1	26106-060162	BOLT, M6X 16 PLATED	3							
26	1	26587-080102	SCREW, M8X10	1							

Remarks
(1) REPAIR PART.

N:Old $\xleftarrow[\text{No}]{\text{Yes}}$ New. Q:Old $\xleftarrow[\text{Yes}]{\text{No}}$ New, R:Old $\xleftarrow[\text{Yes}]{\text{Yes}}$ New. S:Old $\xleftarrow[\text{No}]{\text{No}}$ New. W:Add. Z:Discontinued. F:Interchangeable by set. K:Q'ty Change

Copyright (C) YANMAR CO., LTD. All RightsReserved.

Fig.8. CRANKSHAFT & PISTON

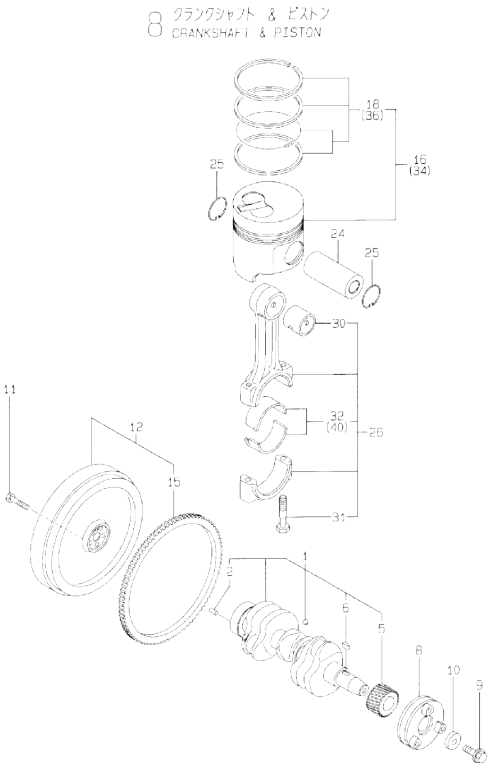

(A)=3TNE68-GH
(B)=
(C)=
(D)=
(E)=
(F)=

No.	Lev.	Parts No.	Description	Q'ty (A)	(B)	(C)	(D)	(E)	(F)	I	R
1	1	119265-21700	CRANKSHAFT ASSY	1							
2	2	129100-01580	PIN, M8X16	1							
5	2	119260-21200	GEAR, CRANKSHAFT	1							
6	2	22512-040120	KEY, 4X 12	1							
8	1	119260-21650	V-PULLEY	1							
9	1	119621-21680	BOLT, FLANGE 12X1.25	1							
10	1	119620-21941	WASHER	1							
11	1	121111-21501	BOLT, FLYWHEEL	5							
12	1	119600-21580	FLYWHEEL ASSY	1							
15	2	119865-21600	GEAR, RING	1							
16	1	119265-22090	PISTON ASSY	3							
18	2	119265-22500	RING SET, PISTON	3							
24	1	119265-22300	PIN, PISTON	3							
25	1	22252-000200	RING, 20	6							
26	1	119265-23100	ROD ASSY, CONNECTING	3							
30	2	119620-23910	BEARING, PISTON PIN	3							1
31	2	119265-23200	BOLT, CONNECTING ROD	6							
32	2	719260-23600	BEARING, CRANK PIN	3							
34	1	719265-22900	PISTON ASSY, 0.25 OS	3							2
36	2	719265-22950	RING SET, 0.25 OS	3							2
40	1	719260-23610	BEARING ASSY, 0.25	3							3

Remarks
(1) REPAIR PART.
(2) OVER-SIZE(O.S=0.25)PART.
(3) UNDER-SIZE(U.S=0.25)PART.

N:Old ←Yes/No→ New. Q:Old ←No/Yes→ New. R:Old ←Yes/Yes→ New. S:Old ←No/No→ New. W:Add. Z:Discontinued. F:Interchangeable by set. K:Q'ty Change

Copyright (C) YANMAR CO., LTD. All RightsReserved.

Fig.9. LUB.OIL SYSTEM

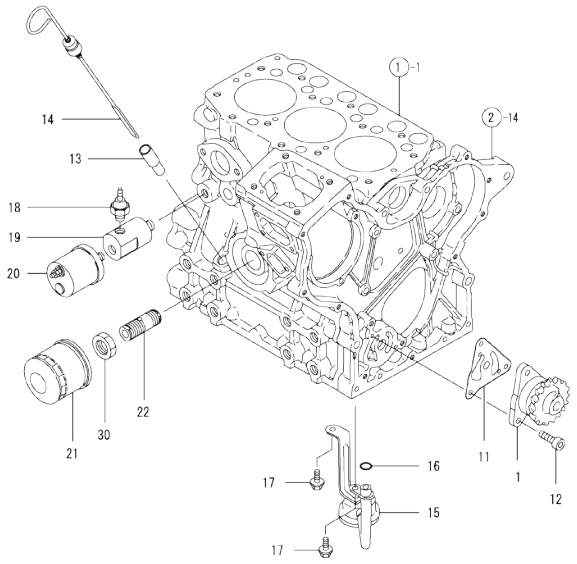

(A)=3TNE68-GH (D)=
(B)= (E)=
(C)= (F)=

No.	Lev.	Parts No.	Description	Q'ty (A)	(B)	(C)	(D)	(E)	(F)	I	R
1	1	119260-32000	PUMP ASSY, OIL	1							
11	1	119660-32020	GASKET, PUMP	1							
12	1	26450-060202	BOLT, M6X 20	3							
13	1	121520-34810	GUIDE, DIPSTICK	1							
14	1	129132-34800	DIPSTICK, OIL	1							
15	1	119260-35081	PIPE, OIL INLET	1							
16	1	24311-000110	O-RING, 1AP11.0	1							
16-1	1	119209-35030	O-RING, P11	1						R	
	(A=E31132)										
17	1	26106-060122	BOLT, M6X 12 PLATED	2							
18	1	124160-39450	SWITCH, 0.5KG	1							
19	1	171375-39601	DAMPER, 1/8	1							
20	1	144626-91560	SENSOR	1							
21	1	119305-35170	FILTER ASSY, D68XL65	1							1
22	1	119225-35300	VALVE ASSY	1						W	
	(A=FROM 1ST)										
30	1	129150-35350	NUT	1						W	
	(A=FROM 1ST)										

Remarks
(1) REPAIR PART.

N:Old $\frac{\text{Yes}}{\text{No}}$ New. Q:Old $\frac{\text{No}}{\text{Yes}}$ New. R:Old $\frac{\text{Yes}}{\text{Yes}}$ New. S:Old $\frac{\text{No}}{\text{No}}$ New. W:Add. Z:Discontinued. F:Interchangeable by set. K:Q'ty Change

Copyright (C) YANMAR CO., LTD. All RightsReserved.

Fig.10. COOLING WATER SYSTEM

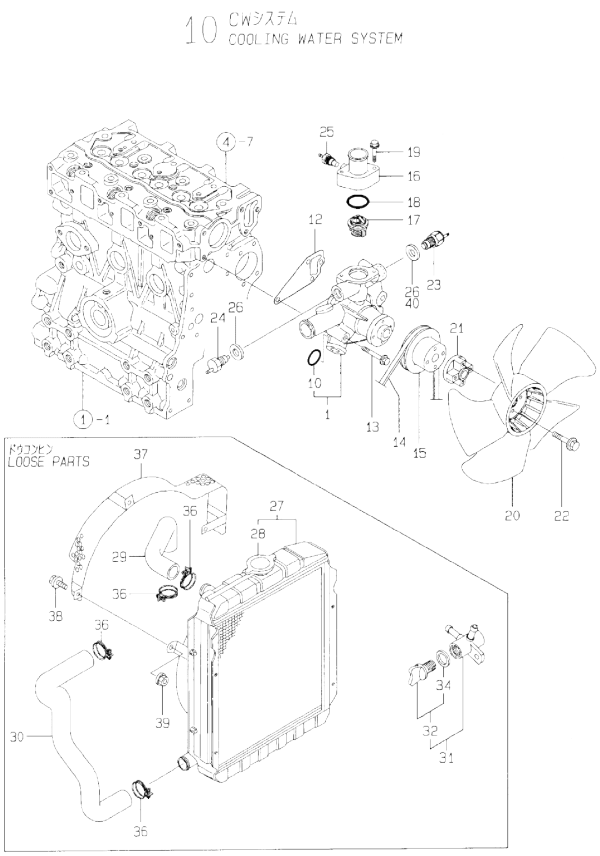

(A)=3TNE68-GH (D)=
(B)= (E)=
(C)= (F)=

No.	Lev.	Parts No.	Description	Q'ty (A)	(B)	(C)	(D)	(E)	(F)	I	R
1	1	119260-42001	PUMP ASSY, WATER	1							
1-1	1	119260-42002	PUMP ASSY, WATER	1						N	
	(A=E20368)										
10	2	119225-42320	O-RING	1							
12	1	119260-42020	GASKET, WATER PUMP	1							
13	1	26106-080452	BOLT, M8X 45 PLATED	3							
14	1	119256-42290	V-BELT, FM33.5	1							
15	1	119620-42350	V-PULLEY	1							
16	1	119248-49530	COVER, THERMOSTAT	1							
17	1	119260-49800	THERMOSTAT, 71	1							
18	1	24321-000350	O-RING, 1AG35.0	1							
19	1	26106-060402	BOLT, M6X 40 PLATED	2							
20	1	119265-44740	FAN, D=310X5F	1							
21	1	171353-44760	SPACER, FAN	1							
22	1	26106-060352	BOLT, M6X 35 PLATED	4							
23	1	121250-44901	SWITCH, 110	1							
24	1	171375-44900	SWITCH, 15	1							
25	1	171375-44910	SENSOR	1							
26	1	124465-44950	GASKET, 16	2							
26-1	1	124465-44950	GASKET, 16	1						K	
	(A=E23639)										
27	1	171340-44510	RADIATOR	1							
28	2	123682-44210	CAP, RADIATOR	1							
29	1	119688-49010	PIPE, WATER	1							
30	1	119645-49020	PIPE, WATER	1							
31	1	129150-49100	COCK ASSY, 3-WAY	1							
32	2	129150-49080	COCK, DRAIN	1							
34	3	119629-49080	GASKET	1							
36	1	23010-038000	CLAMP, 38	4							
37	1	171301-44560	PROTECTOR, FAN	1							
38	1	26013-080142	BOLT, M8X 14	3							
39	1	26366-080002	NUT, M8	3							
40	1	129150-49360	GASKET	1						W	
	(A=E23639)										

N:Old ←Yes/No→ New. Q:Old ←No/Yes→ New. R:Old ←Yes/Yes→ New. S:Old ←No/No→ New. W:Add. Z:Discontinued. F:Interchangeable by set. K:Q'ty Change

Copyright (C) YANMAR CO., LTD. All RightsReserved.

Fig.11. FUEL INJECTION PUMP

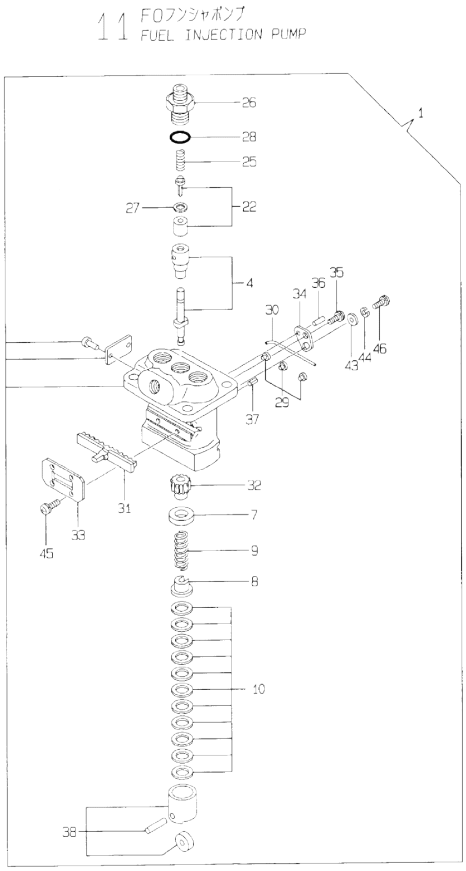

(A)=3TNE68-GH (D)=
(B)= (E)=
(C)= (F)=

No.	Lev.	Parts No.	Description	Q'ty (A)	(B)	(C)	(D)	(E)	(F)	I	R
1	1	719225-51100	PUMP ASSY, INJECTION	1							
4	2	119225-51100	PLUNGER ASSY	3							
7	2	119620-51170	RETAINER, SPRING A	3							
8	2	119620-51180	RETAINER, SPRING B	3							
9	2	119620-51190	SPRING, PLUNGER	3							
10	2	119620-51250	SHIM SET	3							
22	2	119225-51300	VALVE ASSY, DELIVERY	3							
25	2	105546-51330	SPRING, DELIVERY	3							
26	2	119620-51340	HOLDER, DELIVERY	3							
27	2	119620-51350	GASKET	3							
28	2	119620-51370	O-RING	3							
29	2	119620-51450	PIECE	3							
30	2	119620-51461	PIN	1							
31	2	119660-51500	RACK, CONTROL	1							
32	2	119620-51510	PINION	3							
33	2	119660-51530	RETAINER, RACK	1							
34	2	119620-51650	PLATE	2							
35	2	119620-51660	SCREW	2							
36	2	119620-51670	PIN	2							
37	2	119620-51680	PIN	1							
38	2	119620-51700	TAPPET ASSY	3							
43	2	22137-040000	WASHER, 4	2							
44	2	22217-040000	WASHER, SPRING 4	2							
45	2	26022-040082	SCREW, M4X 8	4							
46	2	26587-040102	SCREW, M4X10	2							

N:Old ◄Yes/No► New. Q:Old ◄No/Yes► New. R:Old ◄Yes/Yes► New. S:Old ◄No/No► New. W:Add. Z:Discontinued. F:Interchangeable by set. K:Q'ty Change

Copyright (C) YANMAR CO., LTD. All RightsReserved.

Fig.12. GOVERNOR

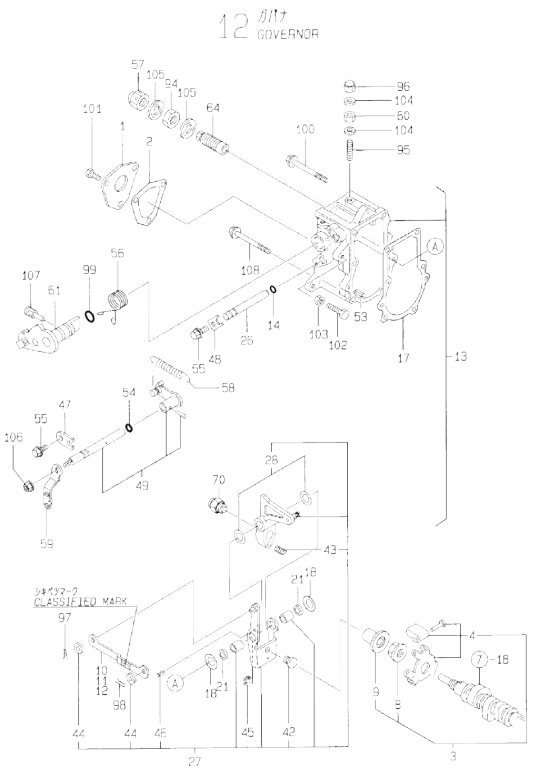

Remarks
(1) SELECTIVE PART:CERTAIN THE CLASSIFICATION MARK,THEN PLACE YOUR ORDER.(REFER TO ILLUSTRATION).

(A)=3TNE68-GH (D)=
(B)= (E)=
(C)= (F)=

No.	Lev.	Parts No.	Description	Q'ty (A)	(B)	(C)	(D)	(E)	(F)	I	R
1	1	119660-61060	COVER, GOVERNOR CASE	1							
2	1	119660-61071	GASKET	1							
3	1	119600-61100	DRIVE ASSY	1							
4	2	119600-61200	WEIGHT ASSY,GOVERNOR	1							
8	2	119660-61300	NUT	1							
9	2	119660-61341	SLEEVE	1							
10	1	119660-61121	LINK, NO MARK	1							1
11	1	119660-61140	LINK, MARK :2	1							1
12	1	119660-61150	LINK, MARK :3	1							1
13	1	119270-61200	CASE ASSY, GOVERNOR	1							
14	2	129155-51280	O-RING, S6	1							
17	2	119660-61052	GASKET	1							
18	2	119660-61460	SHIM SET	1							
21	2	129155-61480	SPACER ASSY	2							
26	2	119660-61491	SHAFT	1							
27	2	119600-61500	LEVER ASSY, GOVERNOR	1							
28	3	174307-51700	SHIM SET	2							
42	3	119600-61541	SHIFTER	1							
43	3	119600-61650	SPRING, STARTING	1							
44	3	22117-040000	WASHER, 4	2							
45	3	22272-000040	RING, E- 4	1							
46	3	22351-030014	PIN, SPRING 3.0X14	1							
47	2	119600-61900	RETAINER, SHAFT	1							
48	2	119660-61901	RETAINER, SHAFT	1							
49	2	119621-66091	SHAFT ASSY	1							
53	2	22351-040010	PIN, SPRING 4.0X10	2							
54	2	24341-000070	O-RING, 1AS7.0	1							
55	2	26106-060102	BOLT, M6X 10 PLATED	2							
56	1	119600-66681	SPRING, RETURN	1							
57	1	129100-61930	NUT, CAP	1							
58	1	119260-66010	SPRING, REGULATOR	1							
59	1	119621-66051	LEVER, REGULATOR	1							
60	1	124550-66370	NUT, M6	1							
61	1	119248-66510	HANDLE, STOP	1							
64	1	119629-66510	LIMITER ASSY, FUEL	1							
70	1	119260-66720	ANGLEICH ASSY	1							
94	1	26776-120002	NUT, LOCK M12	1							
95	1	121575-66830	SCREW	1							
96	1	119600-66840	NUT, CAP	1							
97	1	22360-040000	PIN, SNAP 4	1							
98	1	22360-060000	PIN, SNAP 6	1							
99	1	24311-240100	O-RING, 1AP10A	1							
100	1	26106-060702	BOLT, M6X 70 PLATED	3							
101	1	26116-050102	BOLT, M5X 10 PLATED	3							
102	1	26116-060304	BOLT, M6X 30 PLATED	1							
103	1	26756-060002	NUT, LOCK M6	1							
104	1	22190-060003	SEAL WASER 6	2							
105	1	22190-120002	WASHER, SEAL 12	2							
106	1	194990-22050	NUT, M8	1							
107	1	124250-03640	SCREW	1							
108	1	26106-060752	BOLT, M6X 75 PLATED	2							

N:Old ←Yes/No→ New. Q:Old ←No/Yes→ New. R:Old ←Yes/Yes→ New. S:Old ←No/No→ New. W:Add. Z:Discontinued. F:Interchangeable by set. K:Q'ty Change

Copyright (C) YANMAR CO., LTD. All RightsReserved.

Fig.13. FUEL FEED PUMP

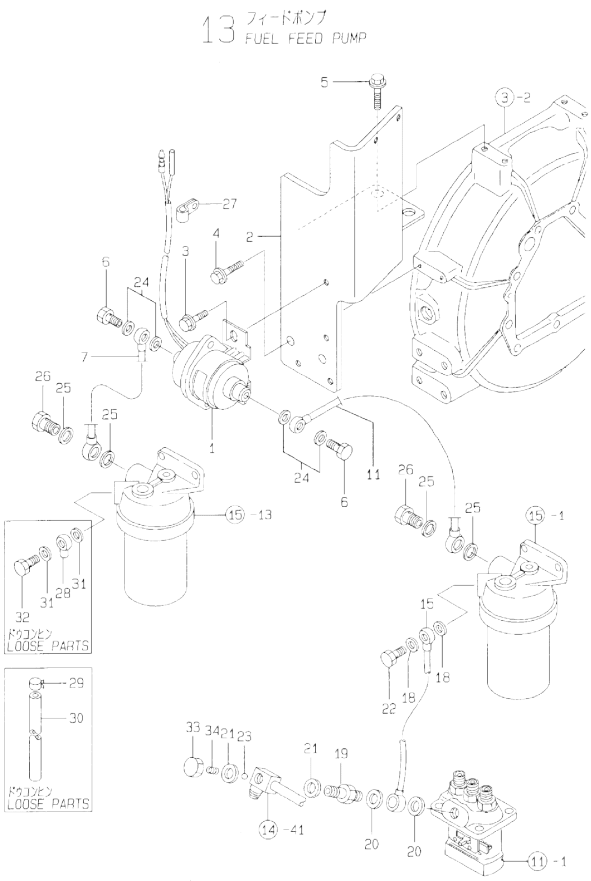

(A)=3TNE68-GH (D)=
(B)= (E)=
(C)= (F)=

No.	Lev.	Parts No.	Description	Q'ty (A)	(B)	(C)	(D)	(E)	(F)	I	R
1	1	124790-52201	PUMP ASSY, FUEL FEED	1							
2	1	119215-52500	BRACKET, PUMP	1							
3	1	26106-060102	BOLT, M6X 10 PLATED	2							
4	1	26106-080162	BOLT, M8X 16 PLATED	2							
5	1	26106-100162	BOLT, M10X 16 PLATED	2							
6	1	105582-59150	BOLT, PIPE JOINT	2							
7	1	171375-59500	PIPE ASSY, FUEL	1							
11	1	119215-59700	PIPE ASSY, FUEL	1							
15	1	119215-59800	PIPE ASSY, FUEL	1							
18	1	104200-59170	GASKET, 12	2							
19	1	171081-59920	BOLT, PIPE JOINT	1							
20	1	23414-120000	GASKET, 12X1.0	2							
21	1	23414-140000	GASKET, 14X1.0	2							
22	1	23857-060000	BOLT, JOINT 6	1							
23	1	24190-090001	BALL, STEEL 9/32	1							
24	1	23414-080012	GASKET, 8X1.0	4							
25	1	23414-120000	GASKET, 12X1.0	4							
26	1	23857-060000	BOLT, JOINT 6	2							
27	1	194440-51620	CLAMP	1							
28	1	103854-39540	JOINT, PIPE	1							
29	1	124766-59050	CLIP, HOSE 12	4							
30	1	124732-59080	PIPE, FUEL D12X1000	1							
31	1	23414-120000	GASKET, 12X1.0	2							
32	1	23857-060000	BOLT, JOINT 6	1							
33	1	171081-59900	NUT, CAP	1							
34	1	171081-59910	SPRING	1							

N:Old ←Yes/No→ New. Q:Old ←No/Yes→ New, R:Old ←Yes/Yes→ New, S:Old ←No/No→ New. W:Add. Z:Discontinued. F:Interchangeable by set. K:Q'ty Change

Copyright (C) YANMAR CO., LTD. All RightsReserved.

Fig.14. FUEL INJECTION VALVE

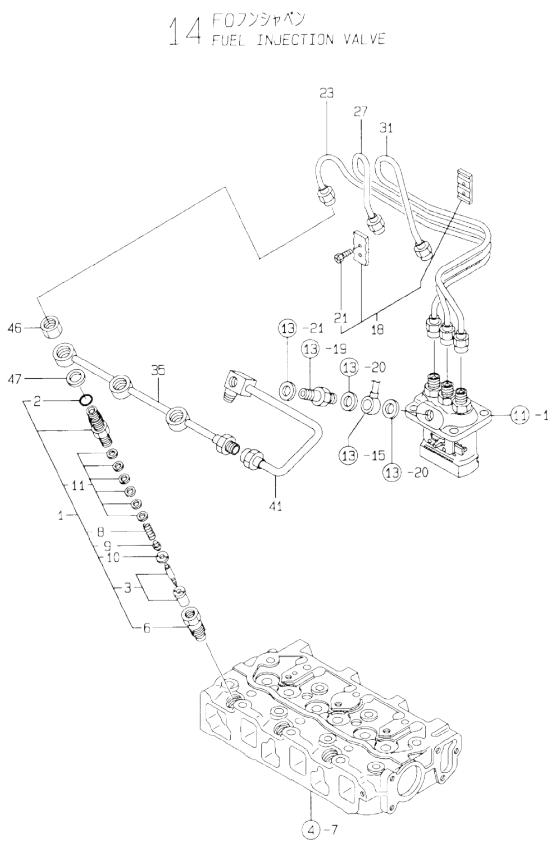

(A)=3TNE68-GH
(B)=
(C)=
(D)=
(E)=
(F)=

No.	Lev.	Parts No.	Description	Q'ty (A)	(B)	(C)	(D)	(E)	(F)	I	R
1	1	719620-53700	VALVE ASSY,INJECTION	3							
2	2	129155-61830	O-RING, S10	3							
3	2	119620-53000	VALVE ASSY,INJECTION	3							
6	2	119620-53080	NUT, NOZZLE	3							
8	2	119620-53120	SPRING, NOZZLE	3							
9	2	114250-53130	SEAT, SPRING	3							
10	2	119620-53140	SPACER, VALVE STOP	3							
11	2	114250-53400	SHIM SET	3							
18	1	129150-59120	RETAINER, PIPE	1							
21	2	129150-59131	BOLT, M4X14	2							
23	1	119209-59810	PIPE ASSY, INJECTION	1							
27	1	119209-59820	PIPE ASSY, INJECTION	1							
31	1	119209-59830	PIPE ASSY, INJECTION	1							
35	1	119248-59550	PIPE ASSY, RETURN	1							
41	1	119248-59560	PIPE ASSY, RETURN	1							
46	1	119620-59700	NUT, NOZZLE	3							
47	1	23414-140000	GASKET, 14X1.0	3							

N:Old ◄Yes/No► New. Q:Old ◄No/Yes► New. R:Old ◄Yes/Yes► New. S:Old ◄No/No► New. W:Add. Z:Discontinued. F:Interchangeable by set. K:Q'ty Change

Copyright (C) YANMAR CO., LTD. All RightsReserved.

Fig.15. FUEL FILTER

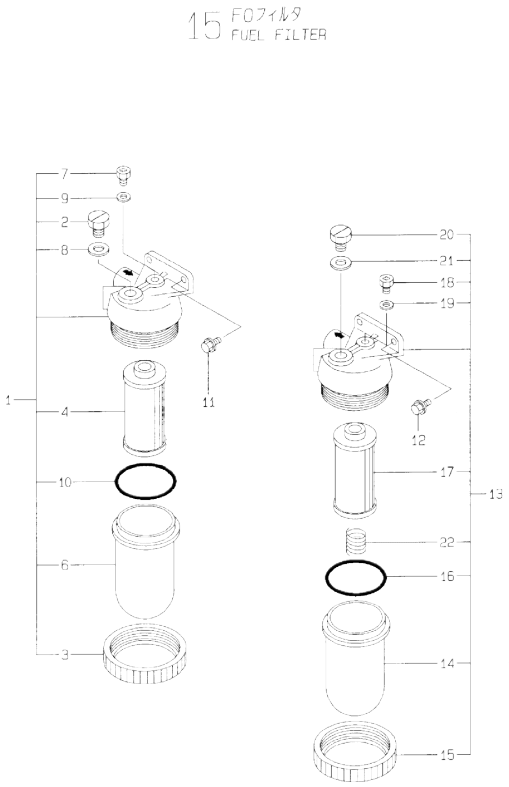

(A)=3TNE68-GH (D)=
(B)= (E)=
(C)= (F)=

No.	Lev.	Parts No.	Description	Q'ty (A)	(B)	(C)	(D)	(E)	(F)	I	R
1	1	124790-55601	STRAINER ASSY, FUEL	1							
2	2	135210-51900	PLUG	1							
3	2	110250-55610	RING, RETAINING	1							
4	2	104500-55710	ELEMENT	1							
6	2	121370-55730	CUP, STRAINER	1							
7	2	101720-55750	PLUG, 6	1							
8	2	23414-080012	GASKET, 8X1.0	1							
9	2	23418-060000	GASKET, 6X1.0	1							
10	2	24341-000440	O-RING, 1AS44.0	1							
11	1	26106-060142	BOLT, M6X 14 PLATED	2							
12	1	26106-060142	BOLT, M6X 14 PLATED	2							
13	1	171081-55900	FILTER ASSY, PRE	1							
14	2	121370-55730	CUP, STRAINER	1							
15	2	110250-55610	RING, RETAINING	1							
16	2	103854-32050	O-RING	1							
17	2	171081-55910	SCREEN	1							
18	2	101720-55750	PLUG, 6	1							
19	2	23418-060000	GASKET, 6X1.0	1							
20	2	135210-51900	PLUG	1							
21	2	23414-080012	GASKET, 8X1.0	1							
22	2	121257-55720	SPRING	1							

N:Old ◄Yes/No► New. Q:Old ◄No/Yes► New, R:Old ◄Yes/Yes► New, S:Old ◄No/No► New, W:Add, Z:Discontinued, F:Interchangeable by set, K:Q'ty Change

Copyright (C) YANMAR CO., LTD. All RightsReserved.

Fig.16. ENGINE STOP DEVICE

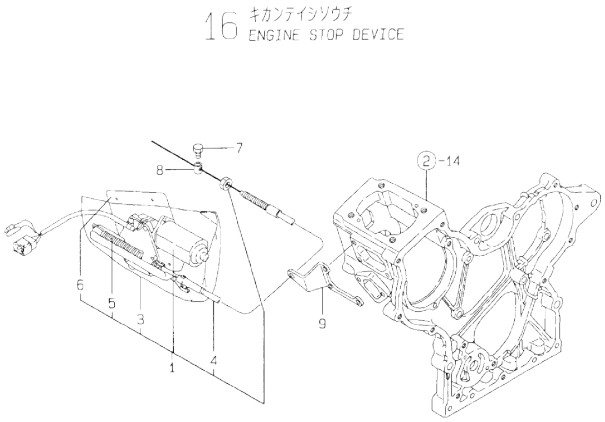

(A)=3TNE68-GH
(B)=
(C)=
(D)=
(E)=
(F)=

No.	Lev.	Parts No.	Description	Q'ty (A)	(B)	(C)	(D)	(E)	(F)	I	R
1	1	121575-77900	MOTOR, STOP	1							
3	2	121575-77960	COVER	1							
4	2	121575-77970	CABLE ASSY (970M/M)	1							
5	2	121575-77980	SPRING	1							
6	2	121575-77990	BRACKET	1							
7	1	26117-040088	BOLT M 4X 8 PLATED	1							
8	1	106500-44870	STOPPER	1							
9	1	119248-66900	SUPPORT, WIRE	1							

N:Old ◄Yes/No► New. Q:Old ◄No/Yes► New. R:Old ◄Yes/Yes► New. S:Old ◄No/No► New. W:Add. Z:Discontinued. F:Interchangeable by set. K:Q'ty Change

Copyright (C) YANMAR CO., LTD. All RightsReserved.

Fig.17. STARTING MOTOR

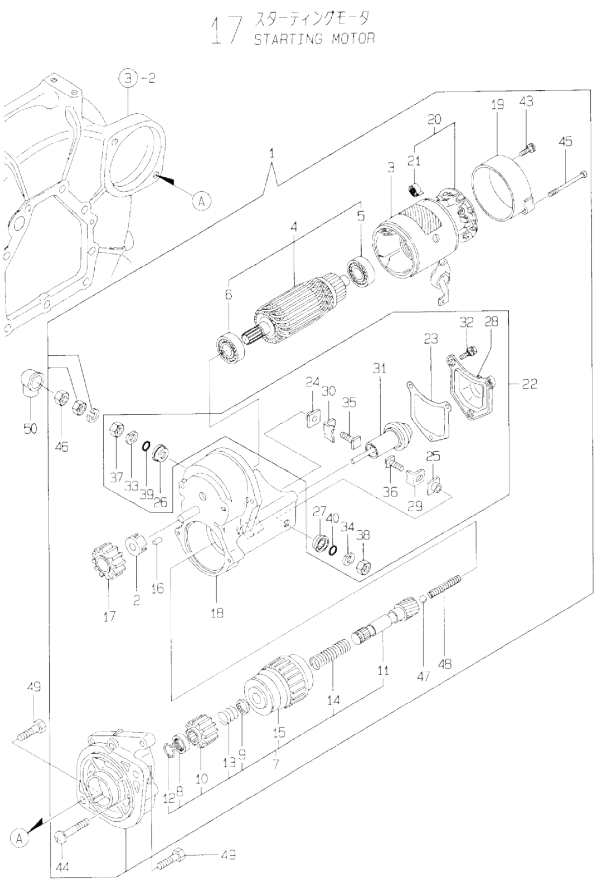

(A)=3TNE68-GH
(B)=
(C)=
(D)=
(E)=
(F)=

No.	Lev.	Parts No.	Description	Q'ty (A)	(B)	(C)	(D)	(E)	(F)	I	R
1	1	119620-77011	STARTER	1							
2	2	X0280630011	RETAINER	1							
3	2	X0281003751	YOKE ASSY	1							
4	2	X0282001531	ARMATURE ASSY	1							
5	3	X9491001360	BEARING	1							
6	3	X9491001860	BEARING, BALL	1							
7	2	X0283005050	CLUTCH, STARTER	1							
8	3	X0280210230	NUT	1							
9	3	X0283270140	RETAINER	1							
10	3	X0283715030	PINION, STARTER	1							
11	3	X0283810040	SHAFT	1							
12	3	X9490721080	RING	1							
13	3	X9491703371	SPRING, COIL	1							
14	3	X9491704260	SPRING	1							
15	3	121120-77930	CASE ASSY, STARTER	1							
16	2	X0283060061	ROLLER	5							
17	2	X0283711420	PINION	1							
18	2	X0284004910	HOUSING	1							
19	2	X0285040631	FRAME ASSY	1							
20	2	X0285100460	HOLDER ASSY, BRUSH	1							
21	3	X9491730461	SPRING	4							
22	2	X0534006460	SWITCH	1							
23	3	X0534040320	GASKET	1							
24	3	X0534490120	BUSH	1							
25	3	X0534490120	BUSH	1							
26	3	X0534490230	BUSH	1							
27	3	X0534490230	BUSH	1							
28	3	X0535050620	COVER	1							
29	3	X0535130241	PLATE	1							
30	3	X0535130320	PLATE	1							
31	3	X0536600401	PLUNGER	1							
32	3	X9151005141	BOLT	3							
33	3	X9490170900	WASHER	1							
34	3	X9490170900	WASHER	1							
35	3	X9490441303	BOLT	1							
36	3	X9490441312	BOLT	1							
37	3	X9490502820	NUT	1							
38	3	X9490502820	NUT	1							
39	3	X9491402100	O-RING	1							
40	3	X9491402100	O-RING	1							
43	2	X9490071810	SCREW	2							
44	2	X9490071970	SCREW	2							
45	2	X9490423330	BOLT	2							
46	2	X9490561370	NUT	1							
47	2	X9491200240	BALL	1							
48	2	X9491703380	SPRING	1							
49	1	26116-120252	BOLT, M12X 25 PLATED	2							
50	1	124550-77030	COVER, TERMINAL	1							

N:Old ←Yes/No→ New. Q:Old ←No/Yes→ New. R:Old ←Yes/Yes→ New. S:Old ←No/No→ New. W:Add. Z:Discontinued. F:Interchangeable by set. K:Q'ty Change

Copyright (C) YANMAR CO., LTD. All RightsReserved.

Fig.18. TENSION PULLEY

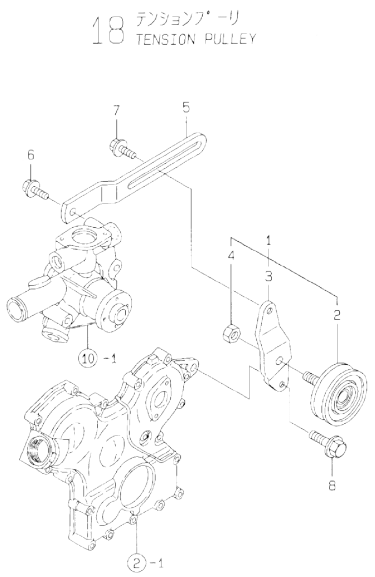

(A)=3TNE68-GH
(B)=
(C)=
(D)=
(E)=
(F)=

No.	Lev.	Parts No.	Description	Q'ty (A)	(B)	(C)	(D)	(E)	(F)	I	R
1	1	171375-44300	PULLEY ASSY, TENSION	1							
2	2	171011-44301	PULLEY, TENSION	1							
3	2	171375-44320	BRACKET, PULLEY	1							
4	2	26706-100002	NUT, M10	1							
5	1	119660-77330	ADJUSTER	1							
6	1	26014-080252	BOLT, M8X 25	1							
7	1	26106-080182	BOLT, M8X 18 PLATED	1							
8	1	26106-100352	BOLT, M10X 35 PLATED	1							

N:Old ◄Yes/No► New. Q:Old ◄No/Yes► New. R:Old ◄Yes/Yes► New. S:Old ◄No/No► New. W:Add. Z:Discontinued. F:Interchangeable by set. K:Q'ty Change

Copyright (C) YANMAR CO., LTD. All RightsReserved.

Fig.19. ELECTRIC PARTS

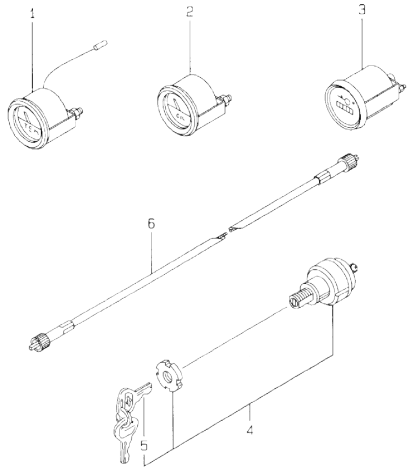

(A)=3TNE68-GH (D)=
(B)= (E)=
(C)= (F)=

No.	Lev.	Parts No.	Description	Q'ty (A)	(B)	(C)	(D)	(E)	(F)	I	R
1	1	171010-77850	THERMOSTAT	2							
2	1	171090-91010	GAUGE	1							
3	1	171014-91101	TACHOMETER	1							
4	1	121400-91251	SWITCH, STARTER	1							
5	2	121400-91271	KEY, SWITCH	1							
6	1	121400-91140	SHAFT	1							

N:Old ◄Yes/No► New. Q:Old ◄No/Yes► New. R:Old ◄Yes/Yes► New. S:Old ◄No/No► New. W:Add. Z:Discontinued. F:Interchangeable by set. K:Q'ty Change

Copyright (C) YANMAR CO., LTD. All RightsReserved.

Fig.20. GASKET SET

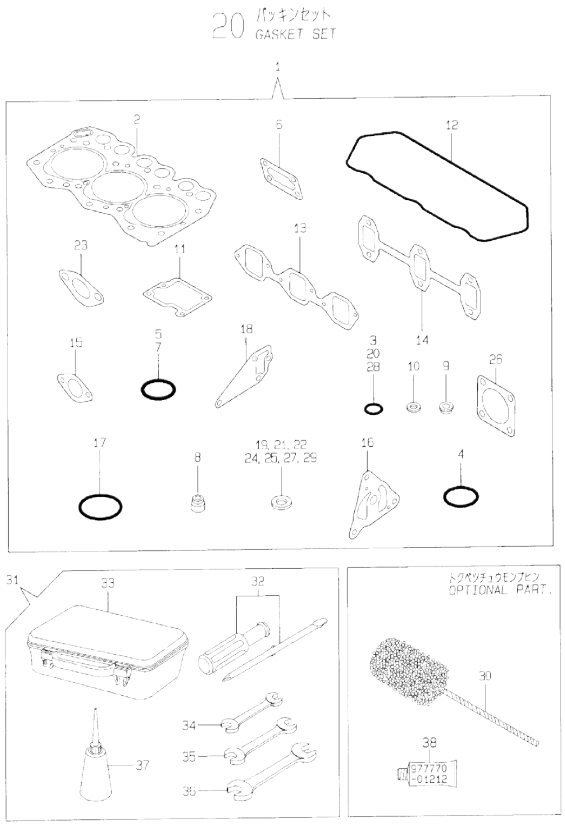

(A)=3TNE68-GH
(B)=
(C)=
(D)=
(E)=
(F)=

No.	Lev.	Parts No.	Description	Q'ty (A)	(B)	(C)	(D)	(E)	(F)	I	R
1	1	719215-92600	GASKET SET	1							1
2	2	119265-01340	GASKET, HEAD	1							
2-1	2	119265-01341	GASKET, HEAD	1						N	
	(A=E21233)										
3	2	24311-000120	O-RING, 1AP12.0	5							
3-1	2	24311-000120	O-RING, 1AP12.0	4						K	
	(A=E31132)										
4	2	24311-000320	O-RING, 1AP32.0	2							
5	2	24341-000240	O-RING, 1AS24.0	1							
6	2	119660-01562	GASKET	1							
7	2	24311-000180	O-RING, 1AP18.0	1							
8	2	119260-11340	SEAL, VALVE STEM	6							
9	2	119600-11450	PROTECTOR, NOZZLE	3							
10	2	119600-11460	GASKET, NOZZLE	6							
11	2	119260-03031	GASKET	1							
12	2	119260-11310	GASKET, BONNET	1							
13	2	119260-12111	GASKET, MANIFOLD	1							
14	2	119260-13110	GASKET	1							
15	2	119621-11960	GASKET	1							
16	2	119660-32020	GASKET, PUMP	1							
17	2	24321-000350	O-RING, 1AG35.0	1							
18	2	119260-42020	GASKET, WATER PUMP	1							
19	2	124465-44950	GASKET, 16	2							
19-1	2	124465-44950	GASKET, 16	1						K	
	(A=E23639)										
20	2	129155-61830	O-RING, S10	3							
21	2	129150-49360	GASKET	1						W	
	(A=E23639)										
22	2	23414-140000	GASKET, 14X1.0	5							
23	2	121520-01851	GASKET	1							
24	2	104200-59170	GASKET, 12	2							
25	2	23414-080012	GASKET, 8X1.0	4							
26	2	124450-11900	GASKET	1							
27	2	23414-170000	GASKET, 17X1.0	1							
28	2	119209-35030	O-RING, P11	1						W	
	(A=E31132)										
29	2	23414-120000	GASKET, 12X1.0	8							
30	1	129400-92410	HONE	1							1
31	1	721400-92102	BOX ASSY, TOOL	1							
32	2	104200-92350	DRIVER, SCREW	1							
33	2	104200-92600	BOX, TOOL	1							
34	2	28110-100120	SPANNER, 10X12	1							
35	2	28110-140170	SPANNER, 14X17	1							
36	2	28110-190220	SPANNER, 19X22	1							
37	2	28210-000140	OILER	1							
38	1	977770-01212	GASKET, LIQUID	1							1

Remarks
(1) OPTIONAL PART.

N:Old ◄Yes/No► New. Q:Old ◄No/Yes► New. R:Old ◄Yes/Yes► New. S:Old ◄No/No► New. W:Add. Z:Discontinued. F:Interchangeable by set. K:Q'ty Change

Copyright (C) YANMAR CO., LTD. All RightsReserved.

Fig.21. CYLINDER BLOCK

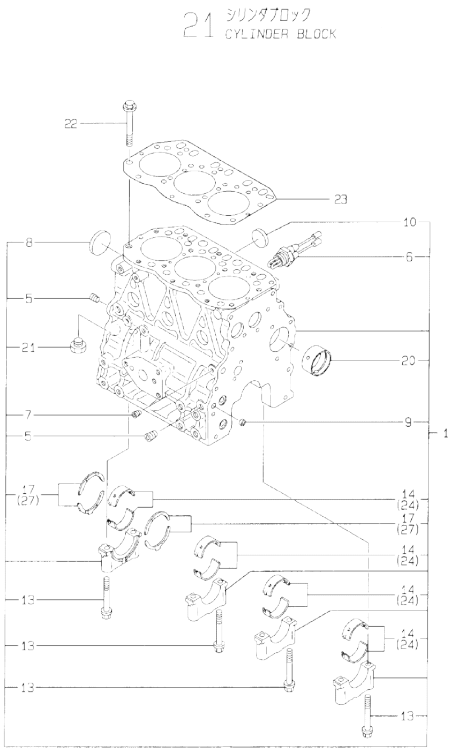

(A)=3TNE78A-GH (D)=
(B)= (E)=
(C)= (F)=

No.	Lev.	Parts No.	Description	Q'ty (A)	(B)	(C)	(D)	(E)	(F)	I	R
1	1	719915-01560	BLOCK ASSY, CYLINDER	1							
5	2	124160-01910	PLUG, PT1/4	2							
6	2	46150-504600	HEATER	1							
6-1	2	124097-77900	HEATER,COOLING WATER	1						N	
	(A=E51793)										
7	2	23871-010000	PLUG, R01	1							
8	2	27231-500000	PLUG 50	1							
9	2	27241-120000	PLUG, 12	2							
10	2	27241-300000	PLUG 30	6							
13	2	119620-02020	BOLT, METAL CAP	8							
14	2	119810-02800	BEARING, MAIN	4							
17	2	119810-02930	BEARING, THRUST	1							
20	2	129795-02411	BUSH, CAMSHAFT	1							
21	2	23887-120002	PLUG, 12	1							
22	1	119810-01200	BOLT, HEAD	14							
23	1	119818-01330	GASKET, HEAD	1							
24	1	119810-02870	BEARING, 0.25 US	4							1
27	1	119810-02940	BEARING, THRUST 0.25	2							2

Remarks
(1) UNDER-SIZE(U.S=0.25)PART.
(2) OVER-SIZE(O.S=0.25)PART.

N:Old $\frac{\text{Yes}}{\text{No}}$ New. Q:Old $\frac{\text{No}}{\text{Yes}}$ New. R:Old $\frac{\text{Yes}}{\text{Yes}}$ New. S:Old $\frac{\text{No}}{\text{No}}$ New. W:Add. Z:Discontinued. F:Interchangeable by set. K:Q`ty Change

Copyright (C) YANMAR CO., LTD. All RightsReserved.

Fig.22. GEAR HOUSING

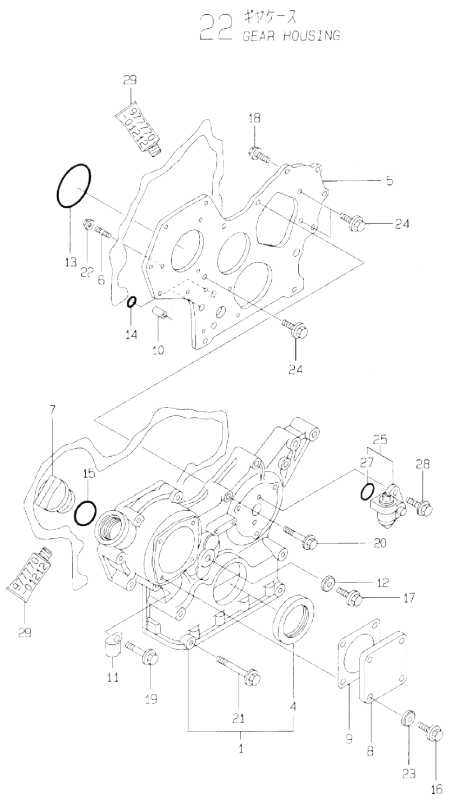

(A)=3TNE78A-GH (D)=
(B)= (E)=
(C)= (F)=

No.	Lev.	Parts No.	Description	Q'ty (A)	(B)	(C)	(D)	(E)	(F)	I	R
1	1	719810-01500	CASE ASSY, GEAR	1							
4	2	129795-01800	SEAL, OIL	1							
5	1	129400-01520	FLANGE, GEAR CASE	1							
6	1	121450-01560	STUD, M8X22	3							
7	1	124160-01751	COVER, FILLER	1							
8	1	124240-01871	COVER	1							
9	1	124240-01883	GASKET	1							
10	1	129795-01950	PIPE, KNOCK L=18	2							
11	1	129150-03100	RETAINER, PIPE	1							
12	1	22190-080002	WASHER, SEAL 6	1							
13	1	121850-51960	O-RING	1							
14	1	24311-000160	O-RING, 1AP16.0	2							
15	1	24311-000320	O-RING, 1AP32.0	1							
16	1	26106-080122	BOLT, M8X 12 PLATED	4							
17	1	26106-080162	BOLT, M8X 16 PLATED	1							
18	1	26106-080202	BOLT, M8X 20 PLATED	2							
19	1	26106-080452	BOLT, M8X 45 PLATED	6							
20	1	26106-080552	BOLT, M8X 55 PLATED	3							
21	1	26106-080852	BOLT, M8X 85 PLATED	4							
22	1	26366-080002	NUT, M8	3							
23	1	22190-080002	WASHER, SEAL 6	4							
24	1	26106-080162	BOLT, M8X 16 PLATED	3							
25	1	129150-91400	GEAR	1							
27	2	24341-000240	O-RING, 1AS24.0	1							
28	1	26106-060162	BOLT, M6X 16 PLATED	2							
29	1	977770-01212	GASKET, LIQUID	1							1

Remarks
(1) OPTIONAL PART.

N:Old ◄Yes/No► New. Q:Old ◄No/Yes► New, R:Old ◄Yes/Yes► New, S:Old ◄No/No► New, W:Add, Z:Discontinued, F:Interchangeable by set, K:Q'ty Change

Copyright (C) YANMAR CO., LTD. All RightsReserved.

Fig.23. FLYWHEEL HOUSING & OIL SUMP

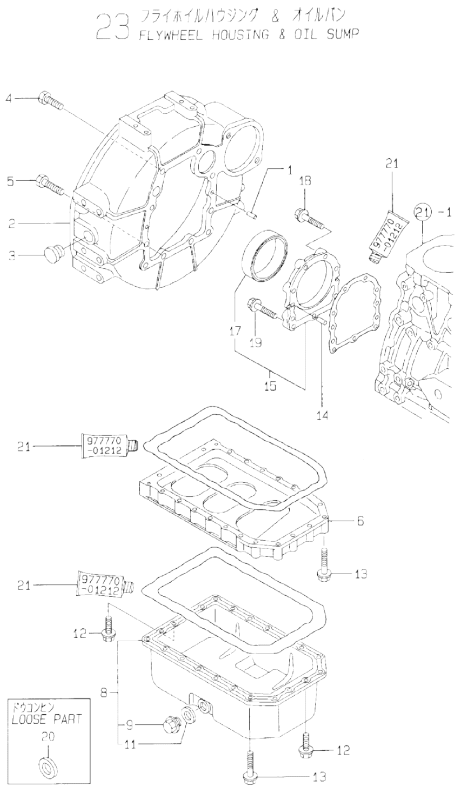

(A)=3TNE78A-GH (D)=
(B)= (E)=
(C)= (F)=

No.	Lev.	Parts No.	Description	Q'ty (A)	(B)	(C)	(D)	(E)	(F)	I	R
1	1	129100-01580	PIN, M8X16	2							
2	1	171301-01600	HOUSING, FLYWHEEL	1							
3	1	119620-01750	CAP	1							
4	1	26206-100252	BOLT, M10X 25 PLATED	6							
5	1	26206-100302	BOLT, M10X 30 PLATED	4							
6	1	119810-01730	SPACER, OIL SUMP	1							
8	1	119810-01770	SUMP ASSY, OIL	1							
9	2	119640-01640	PLUG, DRAIN M22	1							
11	2	22190-220002	WASHER, SEAL 22	1							
12	1	26106-080162	BOLT, M8X 16 PLATED	6							
13	1	26106-080452	BOLT, M8X 45 PLATED	22							
14	1	129100-01580	PIN, M8X16	2							
15	1	719810-01650	CASE ASSY, OIL SEAL	1							
17	2	119810-01780	SEAL, 769310	1							
18	1	26106-080302	BOLT, M8X 30 PLATED	6							
18-1	1	129486-01670	BOLT, M8X30	6						R	
	(A=E10411)										
19	1	26106-080352	BOLT, M8X 35 PLATED	3							
20	1	23414-220000	GASKET, 22X1.0	1							
21	1	977770-01212	GASKET, LIQUID	1							1

Remarks
(1) OPTIONAL PART.

N:Old ←Yes/No→ New. Q:Old ←No/Yes→ New, R:Old ←Yes/Yes→ New, S:Old ←No/No→ New, W:Add, Z:Discontinued, F:Interchangeable by set, K:Q'ty Change

Copyright (C) YANMAR CO., LTD. All RightsReserved.

Fig.24. CYLINDER HEAD & BONNET

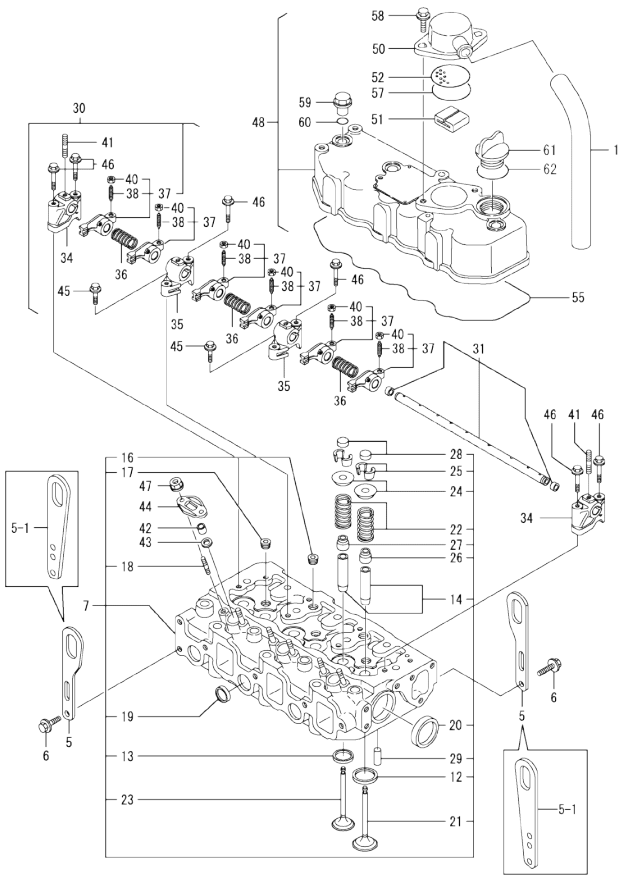

(A)=3TNE78A-GH
(B)=
(C)=
(D)=
(E)=
(F)=

No.	Lev.	Parts No.	Description	Q'ty (A)	(B)	(C)	(D)	(E)	(F)	I	R
1	1	129150-03090	HOSE, ID16X2T	1							
5	1	124736-07900	LIFTER	2							
5-1	1	129900-07900	LIFTER	2						N	
	(A=*2009.08)										
6	1	26106-080142	BOLT, M8X 14 PLATED	4							
7	1	719818-11700	HEAD ASSY, CYLINDER	1							
12	2	119810-11080	SEAT, INTAKE VALVE	3							
13	2	119810-11090	SEAT, EXHAUST VALVE	3							
14	2	124060-11800	GUIDE, VALVE	6							1
16	2	121850-11860	PLUG, PT1/4	2							
17	2	23871-030000	PLUG, R03	3							
18	2	26216-060302	STUD, M6X 30	6							
19	2	27241-220000	PLUG, 22	3							
20	2	27241-400000	PLUG, 40	2							
21	2	119810-11100	VALVE, INTAKE	3							
22	2	119810-11120	SPRING, VALVE	6							
23	2	119810-11130	VALVE, EXHAUST	3							
24	2	104211-11180	RETAINER, SPRING	6							
25	2	27310-070001	COTTER, 7	6							
26	2	124160-11340	SEAL, VALVE STEM	3							
27	2	124950-11340	SEAL, VALVE STEM	3							
28	2	104211-11370	CAP, VALVE	6							
29	2	22351-060012	PIN, SPRING 6.0X12	2							
30	1	119865-11200	SUPPORT ASSY, ARM	1							
31	2	119810-11240	SHAFT ASSY, ROCKER	1							
34	2	129155-11260	SUPPORT, ROCKER ARM	2							
35	2	129155-11270	SUPPORT, ROCKER ARM	2							
36	2	129150-11280	SPRING	3							
37	2	719810-11650	ARM ASSY, ROCKER	6							
38	3	129150-11230	SCREW, VALVE ADJUST	6							
40	3	129150-11750	NUT, M8	6							
41	2	26226-080182	STUD, M8X 18	3							
42	1	119625-11871	PROTECTOR, NOZZLE	3							
43	1	119625-11880	SEAT, NOZZLE	3							
44	1	119625-11900	RETAINER, NOZZLE	3							
45	1	26106-080252	BOLT, M8X 25 PLATED	2							
46	1	26106-080502	BOLT, M8X 50 PLATED	6							
47	1	26366-060002	NUT, M6	6							
48	1	719810-11520	BONNET ASSY, HEAD	1							
50	2	129150-03020	COVER, BREATHER	1							
51	2	129150-03070	BAFFLE, BREATHER	1							
52	2	129150-03080	PLATE, BAFFLE	1							
55	2	119865-11310	GASKET, BONNET	1							
57	2	24341-000500	O-RING, 1AS50.0	1							
58	2	26106-080162	BOLT, M8X 16 PLATED	2							
59	1	124160-11360	KNOB	3							
60	1	24311-000120	O-RING, 1AP12.0	3							
61	1	124160-01751	COVER, FILLER	1							
62	1	24311-000320	O-RING, 1AP32.0	1							

Remarks
(1) REPAIR PART.

N:Old ←Yes/No→ New. Q:Old ←No/Yes→ New. R:Old ←Yes/Yes→ New. S:Old ←No/No→ New. W:Add. Z:Discontinued. F:Interchangeable by set. K:Q'ty Change

Copyright (C) YANMAR CO., LTD. All RightsReserved.

Fig.25. SUCTION MANIFOLD

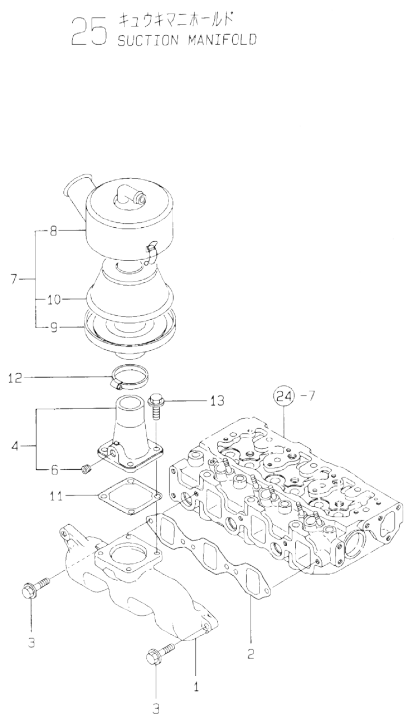

(A)=3TNE78A-GH (D)=
(B)= (E)=
(C)= (F)=

No.	Lev.	Parts No.	Description	Q'ty (A)	(B)	(C)	(D)	(E)	(F)	I	R
1	1	119810-12100	MANIFOLD, AIR INTAKE	1							
2	1	119810-12111	GASKET, MANIFOLD	1							
3	1	26106-080252	BOLT, M8X 25 PLATED	4							
4	1	129470-12210	JOINT ASSY	1							
6	2	23871-010000	PLUG, R01	1							
7	1	129795-12501	SILENCER ASSY	1							
8	2	129795-12520	PIPE, AIR INTAKE	1							
9	2	129795-12530	PLATE	1							
10	2	129795-12540	ELEMENT	1							
11	1	129150-77511	GASKET	1							
12	1	23000-060000	CLAMP, 60	1							
13	1	26106-080162	BOLT, M8X 16 PLATED	4							

N:Old ←Yes/No→ New. Q:Old ←No/Yes→ New. R:Old ←Yes/Yes→ New. S:Old ←No/No→ New. W:Add. Z:Discontinued. F:Interchangeable by set. K:Q'ty Change

Copyright (C) YANMAR CO., LTD. All RightsReserved.

Fig.26. EXHAUST MANIFOLD

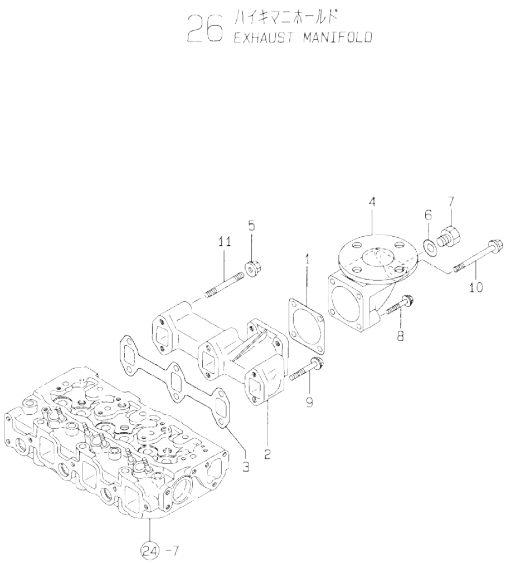

(A)=3TNE78A-GH (D)=
(B)= (E)=
(C)= (F)=

No.	Lev.	Parts No.	Description	Q'ty (A)	(B)	(C)	(D)	(E)	(F)	I	R
1	1	124450-11900	GASKET	1							
2	1	119810-13100	MANIFOLD, EXHAUST	1							
3	1	119810-13110	GASKET	1							
4	1	171083-13300	BEND, EXHAUST 50A	1							
5	1	194990-22050	NUT, M8	2							
6	1	23414-170000	GASKET, 17X1.0	1							
7	1	23894-030002	PLUG, G3/8	1							
8	1	26106-080452	BOLT, M8X 45 PLATED	2							
9	1	26106-080602	BOLT, M8X 60 PLATED	4							
10	1	26106-080952	BOLT, M8X 95 PLATED	2							
11	1	26216-080602	STUD, M8X 60	2							

N:Old ←Yes/No→ New. Q:Old ←No/Yes→ New. R:Old ←Yes/Yes→ New. S:Old ←No/No→ New. W:Add. Z:Discontinued. F:Interchangeable by set. K:Q'ty Change

Copyright (C) YANMAR CO., LTD. All RightsReserved.

Fig.27. CAMSHAFT & DRIVING GEAR

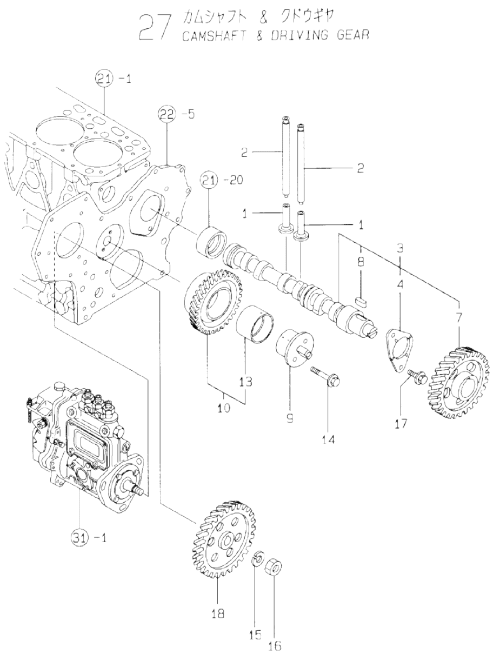

(A)=3TNE78A-GH (D)=
(B)= (E)=
(C)= (F)=

No.	Lev.	Parts No.	Description	Q'ty (A)	(B)	(C)	(D)	(E)	(F)	I	R
1	1	129150-14200	TAPPET	6							
2	1	119810-14400	ROD, PUSH	6							
3	1	119810-14580	CAMSHAFT ASSY	1							
4	2	129150-02450	BEARING, THRUST	1							
7	2	129150-14101	GEAR, CAMSHAFT	1							
8	2	22512-070140	KEY, 7X 14	1							
9	1	129100-25061	SHAFT, IDLE	1							
10	1	129150-25101	GEAR ASSY, IDLE	1							
13	2	129150-25920	BUSH, IDLE GEAR	1							1
14	1	26106-080452	BOLT, M8X 45 PLATED	2							
15	1	22217-120000	WASHER, SPRING 12	1							
16	1	26716-120002	NUT, M12	1							
17	1	26106-080162	BOLT, M8X 16 PLATED	2							
17-1	1	26106-080142	BOLT, M8X 14 PLATED	2						N	
	(A=E10308)										
18	1	129100-25900	GEAR, PUMP	1							

Remarks
(1) REPAIR PART.

N:Old ←Yes/No→ New. Q:Old ←No/Yes→ New. R:Old ←Yes/Yes→ New. S:Old ←No/No→ New. W:Add. Z:Discontinued. F:Interchangeable by set. K:Q'ty Change

Copyright (C) YANMAR CO., LTD. All RightsReserved.

Fig.28. CRANKSHAFT & PISTON

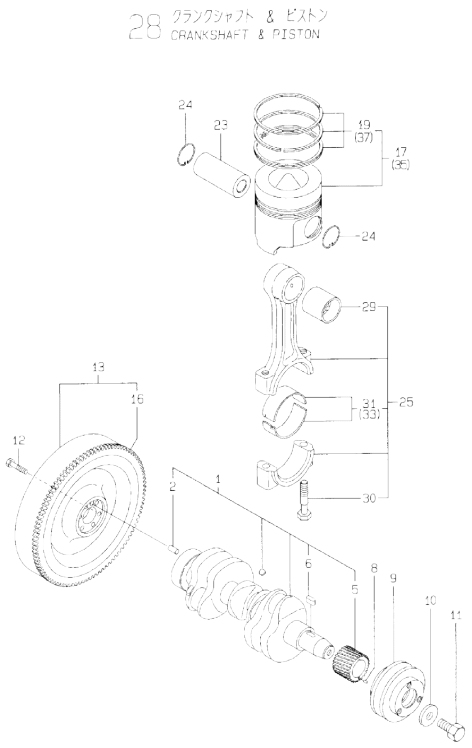

(A)=3TNE78A-GH (D)=
(B)= (E)=
(C)= (F)=

No.	Lev.	Parts No.	Description	Q'ty (A)	(B)	(C)	(D)	(E)	(F)	I	R
1	1	119813-21000	CRANKSHAFT ASSY	1							
2	2	129100-01580	PIN, M8X16	1							
5	2	129150-21200	GEAR, CRANKSHAFT	1							
6	2	22512-070140	KEY, 7X 14	1							
8	1	22351-040010	PIN, SPRING 4.0X10	1							
9	1	171301-21650	V-PULLEY	1							
10	1	129795-21661	WASHER	1							
11	1	121850-21680	BOLT	1							
12	1	121111-21501	BOLT, FLYWHEEL	6							
13	1	171301-21580	FLYWHEEL ASSY	1							
16	2	119865-21600	GEAR, RING	1							
17	1	119818-22090	PISTON ASSY	3							
19	2	119818-22510	RING SET, PISTON	3							
23	1	119813-22300	PIN, PISTON	3							
24	1	129792-22400	CIRCLIP, 23	6							
25	1	719810-23100	ROD ASSY, CONNECTING	3							
29	2	119810-23910	BEARING, PISTON PIN	3							1
30	2	119810-23200	BOLT, CONNECTING ROD	6							
31	2	119810-23600	BEARING, CRANK PIN	3							
33	1	119810-23610	BEARING, 0.25 US	3							2
35	1	119818-22900	PISTON ASSY, 0.25 OS	3							3
37	2	119818-22950	RING SET, 0.25 OS	3							3

Remarks
(1) REPAIR PART.
(2) UNDER-SIZE(U.S=0.25)PART.
(3) OVER-SIZE(O.S=0.25)PART.

N:Old ←Yes/No→ New. Q:Old ←No/Yes→ New, R:Old ←Yes/Yes→ New. S:Old ←No/No→ New. W:Add. Z:Discontinued. F:Interchangeable by set. K:Q'ty Change

Copyright (C) YANMAR CO., LTD. All RightsReserved.

Fig.29. LUB.OIL SYSTEM

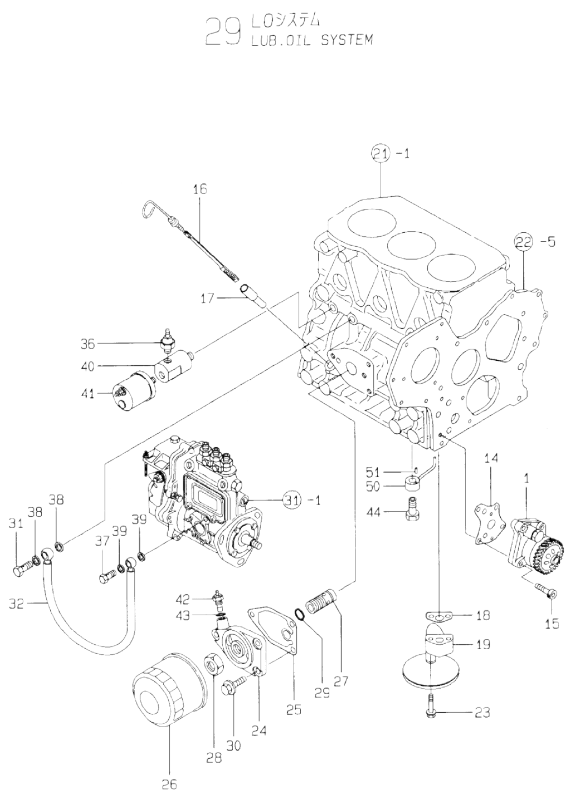

(A)=3TNE78A-GH (D)=
(B)= (E)=
(C)= (F)=

No.	Lev.	Parts No.	Description	Q'ty (A)	(B)	(C)	(D)	(E)	(F)	I	R
1	1	129001-32001	PUMP ASSY, OIL	1							
14	1	129150-32020	GASKET, PUMP	1							
15	1	26450-060252	BOLT, M6X 25	4							
16	1	119932-34800	DIPSTICK, OIL	1							
17	1	121520-34810	GUIDE, DIPSTICK	1							
18	1	129150-35041	GASKET	1							
19	1	119810-35300	PIPE ASSY, OIL INLET	1							
23	1	26106-080352	BOLT, M8X 35 PLATED	2							
24	1	171375-35100	BRACKET, STRAINER	1							
25	1	129150-35111	GASKET	1							
26	1	129150-35151	FILTER, D80XL80	1							
27	1	129001-35300	BOLT, FILTER	1							
28	1	129150-35350	NUT	1							
29	1	24311-000160	O-RING, 1AP16.0	1							
30	1	26106-080202	BOLT, M8X 20 PLATED	3							
31	1	124160-39140	BOLT, PIPE JOINT M10	1							
32	1	119810-39200	PIPE ASSY, OIL	1							
36	1	124160-39450	SWITCH, 0.5KG	1							
37	1	124550-59820	BOLT, PIPE JOINT M8	1							
38	1	23414-100000	GASKET, 10X1.0	2							
39	1	22190-080002	WASHER, SEAL 6	2							
40	1	171375-39601	DAMPER, 1/8	1							
41	1	144626-91560	SENSOR	1							
42	1	124250-49351	SENSOR	1							
43	1	129150-49360	GASKET	1							
44	1	129792-39410	VALVE ASSY, CHECK	3							
50	1	119810-39650	NOZZLE	3							
51	1	22351-030010	PIN, SPRING 3.0X10	3							

N:Old ◄Yes/No► New. Q:Old ◄No/Yes► New, R:Old ◄Yes/Yes► New, S:Old ◄No/No► New, W:Add, Z:Discontinued, F:Interchangeable by set, K:Q'ty Change

Copyright (C) YANMAR CO., LTD. All RightsReserved.

Fig.30. COOLING WATER SYSTEM

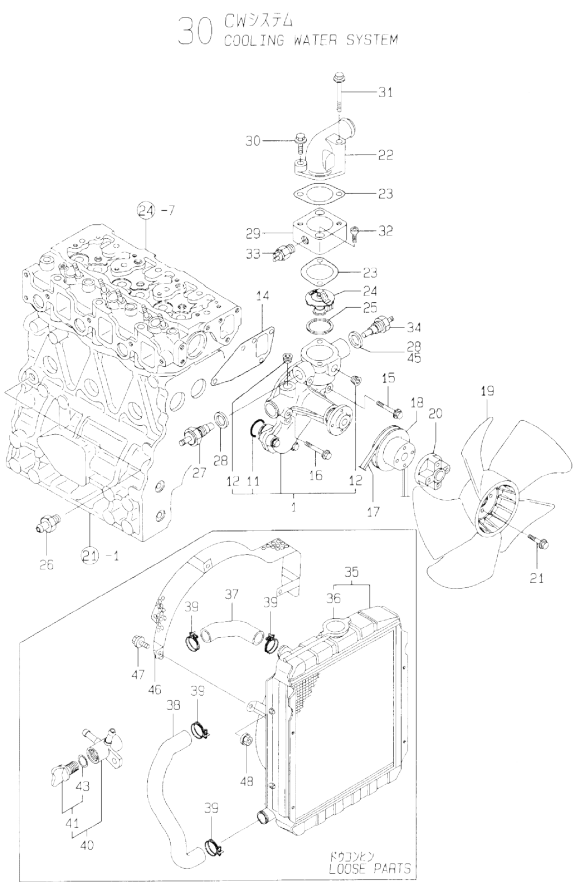

(A)=3TNE78A-GH
(B)=
(C)=
(D)=
(E)=
(F)=

No.	Lev.	Parts No.	Description	Q'ty (A)	(B)	(C)	(D)	(E)	(F)	I	R
1	1	119810-42001	PUMP ASSY, WATER	1							
11	2	129150-42320	O-RING	1							
12	2	23871-030000	PLUG, R03	2							
14	1	129150-42020	GASKET, WATER PUMP	1							
15	1	26106-080352	BOLT, M8X 35 PLATED	1							
16	1	26106-080552	BOLT, M8X 55 PLATED	3							
17	1	25132-003900	V-BELT, A39	1							
18	1	129403-42380	V-PULLEY, D=110	1							
19	1	119265-44740	FAN, D=310X5F	1							
20	1	171353-44760	SPACER, FAN	1							
21	1	26106-060352	BOLT, M6X 35 PLATED	4							
22	1	124101-49530	COVER, THERMOSTAT	1							
23	1	129795-49551	GASKET	2							
24	1	129155-49800	THERMOSTAT, 71	1							
25	1	129150-49811	GASKET, THERMOSTAT	1							
26	1	121550-49111	JOINT, PT1/4	1							
27	1	121250-44901	SWITCH, 110	1							
28	1	124465-44950	GASKET, 16	2							
28-1	1	124465-44950	GASKET, 16	1						K	
	(A=E11224)										
29	1	171335-49590	SPACER	1							
30	1	26106-080302	BOLT, M8X 30 PLATED	1							
31	1	26106-080602	BOLT, M8X 60 PLATED	1							
32	1	26450-080302	BOLT, M8X 30	2							
33	1	171375-44900	SWITCH, 15	1							
34	1	171375-44910	SENSOR	1							
35	1	171340-44510	RADIATOR	1							
36	2	123682-44210	CAP, RADIATOR	1							
37	1	171335-49010	PIPE, WATER	1							
37-1	1	119915-49010	PIPE, WATER	1						N	
	(A=E10570)										
38	1	171301-49020	PIPE, WATER	1							
39	1	23010-038000	CLAMP, 38	4							
40	1	129150-49100	COCK ASSY, 3-WAY	1							
41	2	129150-49080	COCK, DRAIN	1							
43	3	119629-49080	GASKET	1							
45	1	129150-49360	GASKET	1						W	
	(A=E11224)										
46	1	171301-44560	PROTECTOR, FAN	1							
47	1	26013-080142	BOLT, M8X 14	3							
48	1	26366-080002	NUT, M8	3							

N:Old ◄Yes/No► New. Q:Old ◄No/Yes► New. R:Old ◄Yes/Yes► New. S:Old ◄No/No► New. W:Add. Z:Discontinued. F:Interchangeable by set. K:Q'ty Change

Copyright (C) YANMAR CO., LTD. All RightsReserved.

Fig.31. FUEL INJECTION PUMP

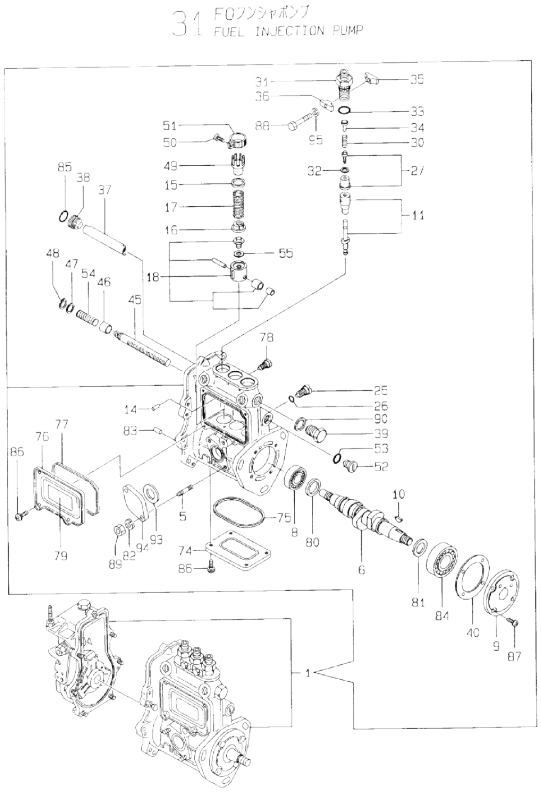

Remarks
(1)GOVERNOR(FIG.32)IS INCORPORATED
IN THIS FUEL INJECTION PUMP.
(REF.NO.1).

(A)=3TNE78A-GH (D)=
(B)= (E)=
(C)= (F)=

No.	Lev.	Parts No.	Description	Q'ty (A)	(B)	(C)	(D)	(E)	(F)	I	R
1	1	719915-51400	PUMP ASSY, INJECTION	1							1
5	2	129155-51020	STUD	2							
6	2	119810-51040	CAMSHAFT	1							
8	2	129155-51050	BEARING, 17BM001D	1							
9	2	129155-51060	SUPPORT, CAMSHAFT	1							
10	2	122710-51090	KEY	1							
11	2	129411-51200	PLUNGER ASSY	3							
14	2	129155-51140	PIN	3							
15	2	174307-51170	RETAINER, SPRING A	3							
16	2	129155-51180	RETAINER, SPRING	3							
17	2	124950-51190	SPRING, PLUNGER	3							
18	2	129155-51200	TAPPET ASSY	3							
25	2	129155-51270	STOPPER, TAPPET	3							
26	2	129155-51280	O-RING, S6	3							
27	2	128170-51300	VALVE ASSY, DELIVERY	3							
30	2	129155-51320	SPRING, DELIVERY	3							
31	2	129155-51340	RETAINER	3							
32	2	124550-51350	GASKET, DELIVERY	3							
33	2	124550-51370	O-RING	3							
34	2	129155-51370	STOPPER, VALVE	3							
35	2	129155-51380	STOPPER	2							
36	2	129155-51390	STOPPER	2							
37	2	129155-51400	DEFLECTOR	1							
38	2	129155-51410	BOLT	1							
39	2	129155-51420	PLUG, M16	1							
40	2	129155-51450	SHIM SET, ADJUSTING	1							
45	2	129155-51500	RACK, CONTROL	1							
46	2	129155-51521	BUSH, RACK	1							
47	2	129155-51530	SPACER	1							
48	2	129155-51540	CIRCLIP	1							
49	2	129155-51550	PINION, CONTROL	3							
50	2	122117-51560	SCREW	3							
51	2	174307-51560	PINION	3							
52	2	129155-51570	PLUG, M12	1							
53	2	129155-51580	O-RING	1							
54	2	129155-51591	SPRING, RACK	1							
55	2	129155-51600	SHIM SET, ADJUSTING	3							
74	2	129155-51700	COVER	1							
75	2	129155-51710	GASKET	1							
76	2	129155-51750	COVER	1							
77	2	129155-51760	GASKET	1							
78	2	129155-51790	STOOPER, RACK	1							
79	2	129156-51910	LABEL, CAUTION	1							
80	2	129155-51930	SPACER, T=3.25	1							
81	2	129155-51940	SPACER, T=1.5	1							
82	2	22217-060000	WASHER, SPRING 6	2							
83	2	22351-050010	PIN, SPRING 5.0X10	2							
84	2	24101-063034	BEARING, BALL 6303	1							
85	2	24341-000160	O-RING, 1AS16.0	1							
86	2	26022-050102	SCREW, M5X10	8							
87	2	26022-060162	SCREW, M6X16	4							

N:Old ←Yes/No→ New. Q:Old ←No/Yes→ New. R:Old ←Yes/Yes→ New. S:Old ←No/No→ New. W:Add. Z:Discontinued. F:Interchangeable by set. K:Q'ty Change

++ CONTINUE ++

Copyright (C) YANMAR CO., LTD. All RightsReserved.

Fig.31. FUEL INJECTION PUMP

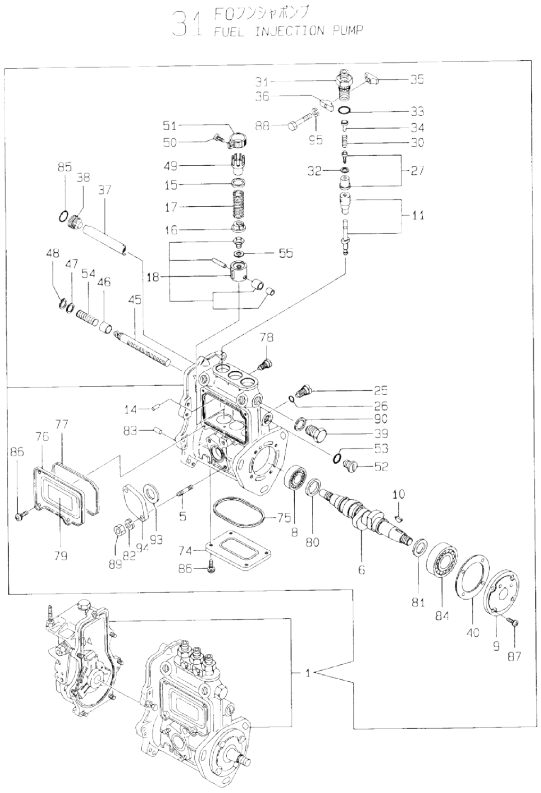

Remarks
(1)GOVERNOR(FIG.32)IS INCORPORATED
IN THIS FUEL INJECTION PUMP.
(REF.NO.1).

(A)=3TNE78A-GH (D)=
(B)= (E)=
(C)= (F)=

No.	Lev.	Parts No.	Description	Q'ty (A)	(B)	(C)	(D)	(E)	(F)	I	R
88	2	26116-050302	BOLT, M5X 30 PLATED	2							
89	2	26716-060002	NUT, M6	2							
90	2	22190-160002	WASHER, SEAL 16	1							
93	2	129155-52050	GASKET	1							
94	2	129100-52200	COVER	1							
95	2	22217-050000	WASHER, SPRING 5	2							

N:Old ◄Yes/No► New. Q:Old ◄No/Yes► New, R:Old ◄Yes/Yes► New, S:Old ◄No/No► New, W:Add, Z:Discontinued, F:Interchangeable by set, K:Q'ty Change

Copyright (C) YANMAR CO., LTD. All RightsReserved.

Fig.32. GOVERNOR

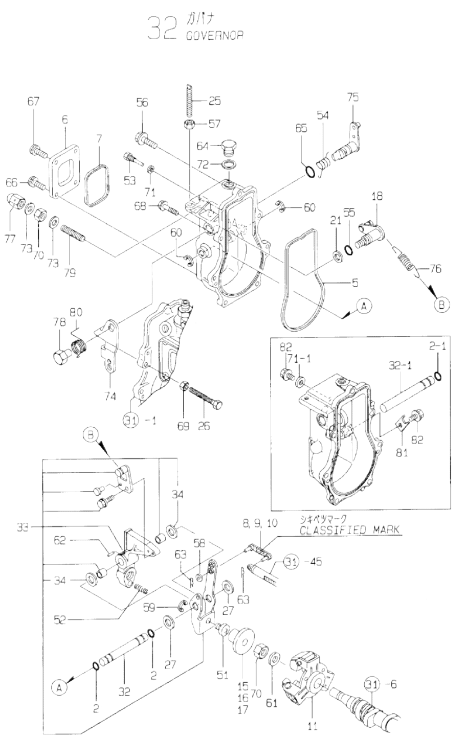

Remarks
(1) SELECTIVE PARTS;CERTAIN THE CLASSIFICATION MARK,THEN PLACE YOUR ORDER.(REF.TO.ILLUSTRATION).
(2) SELECTIVE PART.
* THIS FIGURE(GOVERNOR ASSY)IS INCORPORATED IN THE FUEL INJECTION PUMP ASSY(FIG.31).

(A)=3TNE78A-GH (D)=
(B)= (E)=
(C)= (F)=

No.	Lev.	Parts No.	Description	Q'ty (A)	(B)	(C)	(D)	(E)	(F)	I	R
2	2	129155-51280	O-RING, S6	2							
2-1	2	129155-51280	O-RING, S6	1						K	
	(A=E10805)										
5	2	129155-61050	GASKET	1							
6	2	129155-61060	COVER, GOVERNOR CASE	1							
7	2	129155-61070	GASKET	1							
8	2	129155-61120	LINK, L=30 MARK 0	1							1
9	2	129155-61130	LINK, L=31 MARK 1	1							1
10	2	129155-61140	LINK, L=30.5 MARK 05	1							1
11	2	129155-61201	WEIGHT ASSY,GOVERNOR	1							
15	2	129155-61341	SLEEVE	1							2
16	2	129155-61350	SLEEVE, L=24.9	1							2
17	2	129155-61360	SLEEVE, L=25.2	1							2
18	2	129100-61400	SHAFT ASSY	1							
21	2	129155-61430	SPACER	1							
25	2	129155-61450	BOLT, LIMITER	1							
26	2	129155-61460	BOLT, IDLE	1							
27	2	129155-61480	SPACER ASSY	2							
32	2	129155-61490	SHAFT	1							
32-1	2	129155-61380	SHAFT	1						S	
	(A=E10805)										
33	2	129100-61501	LEVER ASSY, GOVERNOR	1							
34	3	174307-51700	SHIM SET	2							
51	2	129155-61540	SHIFTER	1							
52	2	129500-61650	SPRING, FUEL CONTROL	1							
53	2	129155-61810	PIN	1							
54	2	129100-61821	SPRING, RETURN	1							
55	2	129155-61830	O-RING, S10	1							
56	2	129155-61950	BOLT	1							
57	2	124550-66370	NUT, M6	1							
58	2	22117-040000	WASHER, 4	1							
59	2	22272-000040	RING, E- 4	1							
60	2	22272-000060	RING, E- 6	2						Z	
	(A=E10805)										
61	2	22287-120000	WASHER, 12	1							
62	2	22351-030016	PIN, SPRING 3.0X16	1							
63	2	22372-040000	PIN, SNAP 4	2							
64	2	23887-100002	PLUG, 10	1							
65	2	24311-240100	O-RING, 1AP10A	1							
66	2	26022-050102	SCREW, M5X10	2							
67	2	26023-050102	SCREW, M5X10	2							
68	2	26106-060202	BOLT, M6X 20 PLATED	6							
69	2	26756-060002	NUT, LOCK M6	1							
70	2	26776-120002	NUT, LOCK M12	2							
71	2	22190-060002	WASHER, SEAL 6	1							
71-1	2	22190-060002	WASHER, SEAL 6	2						K	
	(A=E10805)										
72	2	22190-100002	WASHER, SEAL 10	1							
73	2	22190-120002	WASHER, SEAL 12	2							
74	2	171488-61440	LEVER, CONTROL	1							
75	2	129155-61802	LEVER, STOP	1							

N:Old ←Yes/No→ New. Q:Old ←No/Yes→ New. R:Old ←Yes/Yes→ New. S:Old ←No/No→ New. W:Add. Z:Discontinued. F:Interchangeable by set. K:Q'ty Change

++ CONTINUE ++

Copyright (C) YANMAR CO., LTD. All RightsReserved.

Fig.32. GOVERNOR

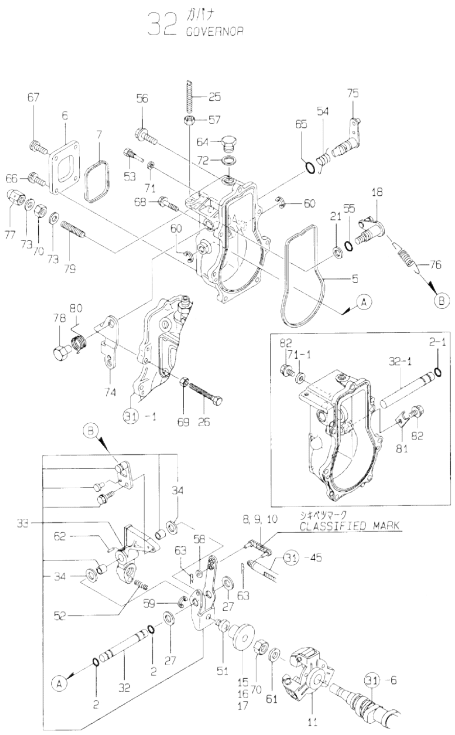

Remarks
(1) SELECTIVE PARTS;CERTAIN THE CLASSIFICATION MARK,THEN PLACE YOUR ORDER.(REF.TO.ILLUSTRATION).
(2) SELECTIVE PART.
* THIS FIGURE(GOVERNOR ASSY)IS INCORPORATED IN THE FUEL INJECTION PUMP ASSY(FIG.31).

(A)=3TNE78A-GH (D)=
(B)= (E)=
(C)= (F)=

No.	Lev.	Parts No.	Description	Q'ty (A)	(B)	(C)	(D)	(E)	(F)	I	R
76	2	129500-61700	SPRING, GOVERNOR	1							
77	2	26687-120002	NUT, CAP M12	1							
78	2	129255-61410	NUT, LOCK	1							
79	2	129155-61470	BOLT, CONTROL	1							
80	2	129255-61420	SPRING, RETURN	1							
81	2	119660-61901	RETAINER, SHAFT	1							W
	(A=E10805)										
82	2	26106-060102	BOLT, M6X 10 PLATED	2							W
	(A=E10805)										

N:Old ←Yes/No→ New. Q:Old ←No/Yes→ New, R:Old ←Yes/Yes→ New, S:Old ←No/No→ New, W:Add, Z:Discontinued. F:Interchangeable by set. K:Q'ty Change

Copyright (C) YANMAR CO., LTD. All RightsReserved.

Fig.33. FUEL FEED PUMP

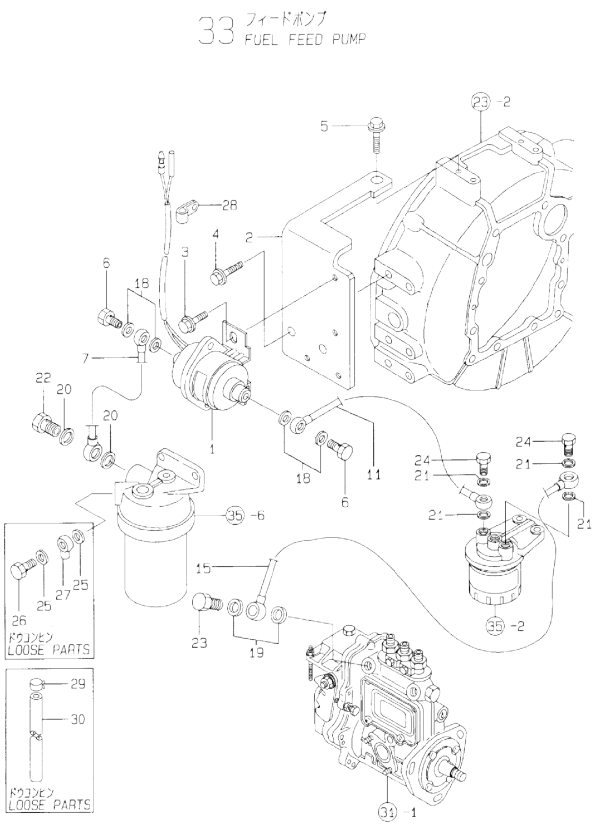

(A)=3TNE78A-GH (D)=
(B)= (E)=
(C)= (F)=

No.	Lev.	Parts No.	Description	Q'ty (A)	(B)	(C)	(D)	(E)	(F)	I	R
1	1	124790-52201	PUMP ASSY, FUEL FEED	1							
2	1	171375-52501	BRACKET, PUMP	1							
3	1	26106-060102	BOLT, M6X 10 PLATED	2							
4	1	26106-080162	BOLT, M8X 16 PLATED	2							
5	1	26106-100162	BOLT, M10X 16 PLATED	1							
6	1	105582-59150	BOLT, PIPE JOINT	2							
7	1	171375-59500	PIPE ASSY, FUEL	1							
11	1	171335-59511	PIPE ASSY, FUEL	1							
15	1	171335-59521	PIPE ASSY, FUEL	1							
18	1	23414-080012	GASKET, 8X1.0	4							
19	1	23414-120000	GASKET, 12X1.0	2							
20	1	23414-120000	GASKET, 12X1.0	2							
21	1	23414-120000	GASKET, 12X1.0	4							
22	1	23857-060000	BOLT, JOINT 6	1							
23	1	23857-060000	BOLT, JOINT 6	1							
24	1	23857-060000	BOLT, JOINT 6	2							
25	1	23414-120000	GASKET, 12X1.0	2							
26	1	23857-060000	BOLT, JOINT 6	1							
27	1	103854-39540	JOINT, PIPE	1							
28	1	194440-51620	CLAMP	1							
29	1	124766-59050	CLIP, HOSE 12	4							
30	1	124732-59080	PIPE, FUEL D12X1000	1							

N:Old ◄Yes/No► New. Q:Old ◄No/Yes► New, R:Old ◄Yes/Yes► New, S:Old ◄No/No► New. W:Add. Z:Discontinued. F:Interchangeable by set. K:Q'ty Change

Copyright (C) YANMAR CO., LTD. All RightsReserved.

Fig.34. FUEL INJECTION VALVE

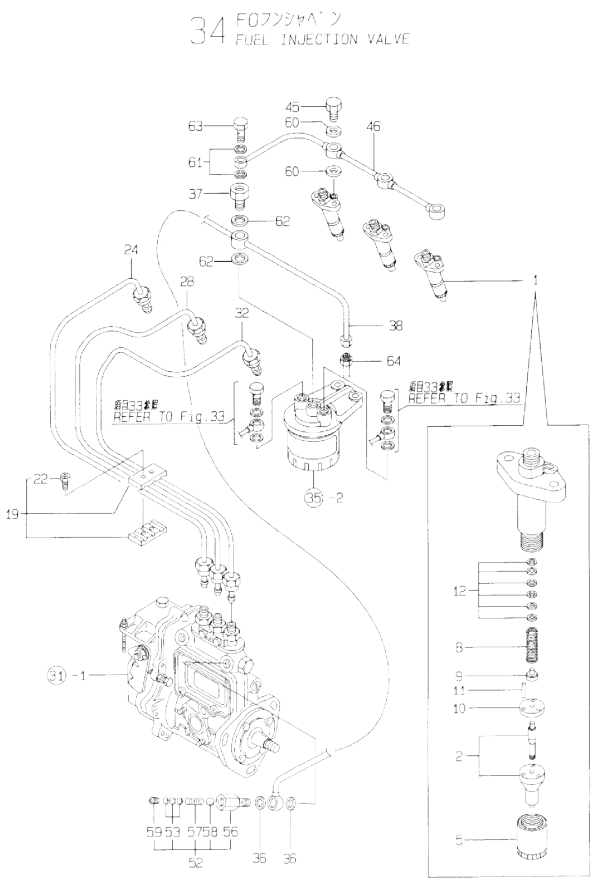

(A)=3TNE78A-GH (D)=
(B)= (E)=
(C)= (F)=

No.	Lev.	Parts No.	Description	Q'ty (A)	(B)	(C)	(D)	(E)	(F)	I	R
1	1	729500-53300	VALVE ASSY,INJECTION	3							
2	2	129500-53000	VALVE ASSY,INJECTION	3							
5	2	114250-53080	NUT, NOZZLE D16.95	3							
8	2	114250-53120	SPRING, NOZZLE	3							
9	2	114250-53130	SEAT, SPRING	3							
10	2	114250-53140	PLATE	3							
11	2	114250-53210	PIN	6							
12	2	114250-53400	SHIM SET	3							
19	1	129150-59120	RETAINER, PIPE	1							
22	2	129150-59131	BOLT, M4X14	2							
24	1	119811-59810	PIPE ASSY, INJECTION	1							
28	1	119811-59820	PIPE ASSY, INJECTION	1							
32	1	119811-59830	PIPE ASSY, INJECTION	1							
36	1	104200-59170	GASKET, 12	2							
37	1	129495-59300	BOLT, PIPE JOINT	1							
38	1	171335-59530	PIPE ASSY, FUEL	1							
45	1	129491-59540	BOLT, PIPE JOINT M6	3							
46	1	171335-59551	PIPE ASSY, RETURN	1							
52	1	129100-59951	VALVE ASSY, CHECK	1							
53	2	129100-59850	SHIM SET	1							
56	2	129100-59961	BODY, VALVE	1							
57	2	129100-59970	SPRING	1							
58	2	24190-080001	BALL, STEEL 1/4	1							
59	2	27241-100000	PLUG, 10	1							
60	1	23414-060000	GASKET, 6X1.0	6							
61	1	23414-080012	GASKET, 8X1.0	2							
62	1	23414-140000	GASKET, 14X1.0	2							
63	1	23851-030000	JOINT BOLT 3	1							
64	1	43551-001451	UNION 8(M)	1							

N:Old ←Yes/No→ New. Q:Old ←No/Yes→ New, R:Old ←Yes/Yes→ New, S:Old ←No/No→ New, W:Add, Z:Discontinued, F:Interchangeable by set, K:Q'ty Change

Copyright (C) YANMAR CO., LTD. All RightsReserved.

Fig.35. FUEL FILTER

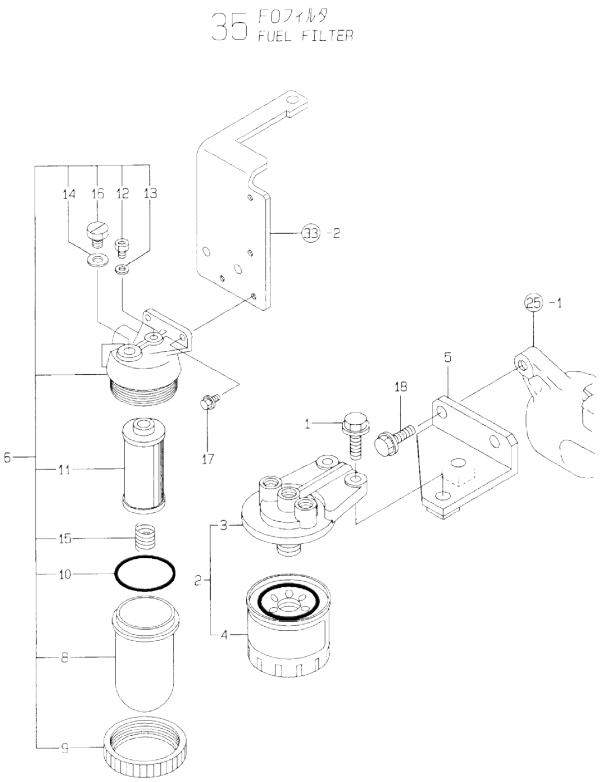

(A)=3TNE78A-GH
(B)=
(C)=
(D)=
(E)=
(F)=

No.	Lev.	Parts No.	Description	Q'ty (A)	(B)	(C)	(D)	(E)	(F)	I	R
1	1	26106-100302	BOLT, M10X 30 PLATED	2							
2	1	129470-55601	FILTER ASSY, FUEL	1							
3	2	129470-55610	BODY, STRAINER	1							
4	2	129470-55701	STRAINER ASSY, FUEL	1							
5	1	171335-55611	BRACKET, STRAINER	1							
6	1	171081-55900	FILTER ASSY, PRE	1							
8	2	121370-55730	CUP, STRAINER	1							
9	2	110250-55610	RING, RETAINING	1							
10	2	103854-32050	O-RING	1							
11	2	171081-55910	SCREEN	1							
12	2	101720-55750	PLUG, 6	1							
13	2	23418-060000	GASKET, 6X1.0	1							
14	2	23414-080012	GASKET, 8X1.0	1							
15	2	121257-55720	SPRING	1							
16	2	135210-51900	PLUG	1							
17	1	26106-060142	BOLT, M6X 14 PLATED	2							
18	1	26106-080162	BOLT, M8X 16 PLATED	2							

N:Old ←Yes/No→ New. Q:Old ←No/Yes→ New. R:Old ←Yes/Yes→ New. S:Old ←No/No→ New. W:Add. Z:Discontinued. F:Interchangeable by set. K:Q'ty Change

Copyright (C) YANMAR CO., LTD. All RightsReserved.

Fig.36. ENGINE STOP DEVICE

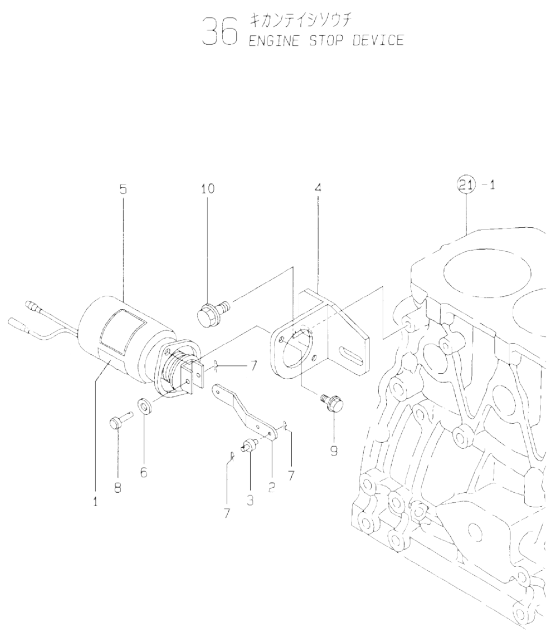

(A)=3TNE78A-GH (D)=
(B)= (E)=
(C)= (F)=

No.	Lev.	Parts No.	Description	Q'ty (A)	(B)	(C)	(D)	(E)	(F)	I	R
1	1	171010-65100	LABEL	1							
2	1	171335-65110	LINK, SOLENOID	1							
3	1	171335-65120	PIN	1							
4	1	171335-65130	BRACKET, SOLENOID	1							
5	1	171335-77951	SOLENOID, MAGNETIC	1							
6	1	22117-050000	WASHER, 5	1							
7	1	22360-050000	SNAP PIN 5	3							
8	1	22487-050160	PIN, H 5X 16	1							
9	1	26106-060122	BOLT, M6X 12 PLATED	2							
10	1	26106-080142	BOLT, M8X 14 PLATED	2							

N:Old ←Yes/No→ New. Q:Old ←No/Yes→ New, R:Old ←Yes/Yes→ New. S:Old ←No/No→ New. W:Add. Z:Discontinued. F:Interchangeable by set. K:Q'ty Change

Copyright (C) YANMAR CO., LTD. All RightsReserved.

Fig.37. STARTING MOTOR

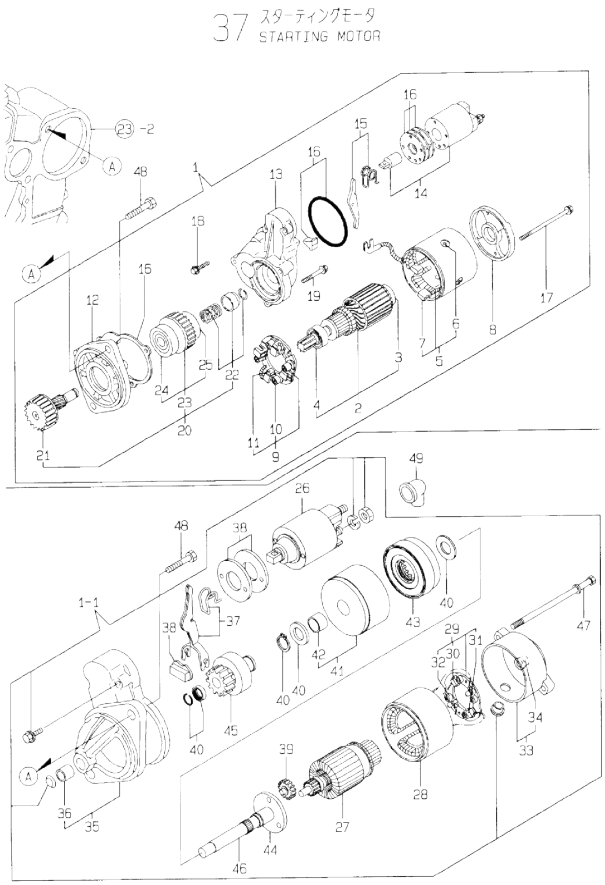

(A)=3TNE78A-GH
(B)=
(C)=
(D)=
(E)=
(F)=

No.	Lev.	Parts No.	Description	Q'ty (A)	(B)	(C)	(D)	(E)	(F)	I	R
1	1	124976-77011	STARTER, S114-349A	1							
1-1	1	129698-77010	STARTER, 12V1.2KW	1							R
	(A=E13548)										
2	2	X211451007	ARMATURE ASSY	1							Z
	(A=E13548)										
3	3	X211415502	BEARING, BALL	1							Z
	(A=E13548)										
4	3	X211425502	BEARING, BALL	1							Z
	(A=E13548)										
5	2	X211472106	COIL ASSY, FIELD	1							Z
	(A=E13548)										
6	3	X21143215	SCREW, CORE	4							Z
	(A=E13548)										
7	3	X211469002	BRUSH (+)	2							Z
	(A=E13548)										
8	2	X211483003	COVER	1							Z
	(A=E13548)										
9	2	X211429007	HOLDER ASSY, BRUSH	1							Z
	(A=E13548)										
10	3	X21148314	SPRING, BRUSH	4							Z
	(A=E13548)										
11	3	X211459002	BRUSH (-)	2							Z
	(A=E13548)										
12	2	X211476504	HOUSING ASSY, GEAR	1							Z
	(A=E13548)										
13	2	X211414501	HOUSING, CENTER	1							Z
	(A=E13548)										
14	2	171008-55730	SWITCH ASSY	1							Z
	(A=E13548)										
15	2	X21146012	LEVER, SHIFT	1							Z
	(A=E13548)										
16	2	171008-77571	COVER KIT, DUST	1							Z
	(A=E13548)										
17	2	X211468005	BOLT, THROUGH	2							Z
	(A=E13548)										
18	2	X21145866	BOLT	2							Z
	(A=E13548)										
19	2	X21142867	BOLT	3							Z
	(A=E13548)										
20	2	X211415505	CLUTCH ASSY	1							Z
	(A=E13548)										
21	3	X211495009	SHAFT	1							Z
	(A=E13548)										
22	3	X211429006	STOPPER SET	1							Z
	(A=E13548)										
23	3	X211425505	CLUTCH ASSY	1							Z
	(A=E13548)										
24	4	X211435502	BALL BEARING	1							Z
	(A=E13548)										
25	4	X211445502	BALL BEARING	1							Z
	(A=E13548)										

N:Old ←Yes/No→ New. Q:Old ←No/Yes→ New. R:Old ←Yes/Yes→ New. S:Old ←No/No→ New. W:Add. Z:Discontinued. F:Interchangeable by set. K:Q'ty Change

++ CONTINUE ++

Copyright (C) YANMAR CO., LTD. All RightsReserved.

Fig.37. STARTING MOTOR

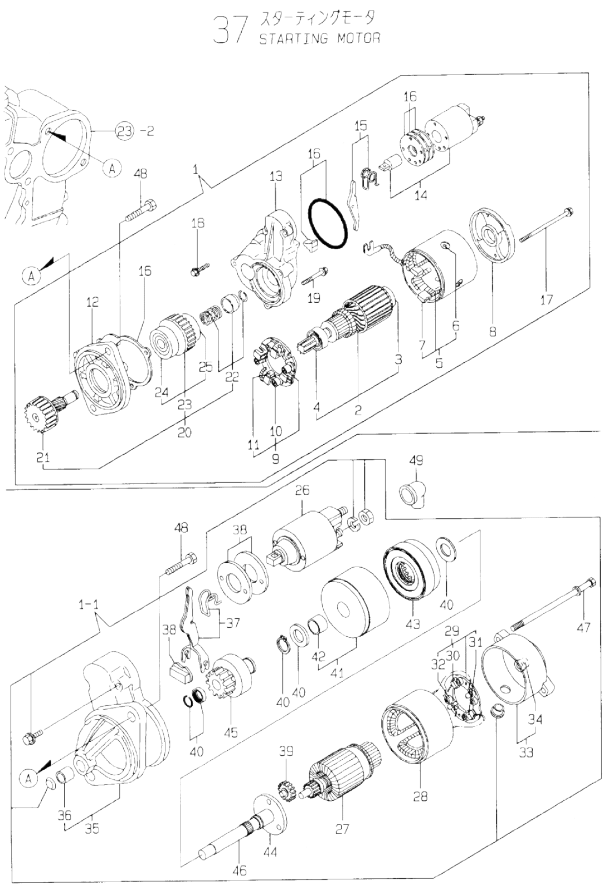

(A)=3TNE78A-GH
(B)=
(C)=
(D)=
(E)=
(F)=

No.	Lev.	Parts No.	Description	Q'ty (A)	(B)	(C)	(D)	(E)	(F)	I	R
26	2	124298-77020	SWITCH, MAGNETIC	1						W	
	(A=E13548)										
27	2	129698-77100	ARMATURE ASSY	1						W	
	(A=E13548)										
28	2	129698-77110	YOKE ASSY	1						W	
	(A=E13548)										
29	2	129698-77120	HOLDER ASSY, BRUSH	1						W	
	(A=E13548)										
30	3	129698-77140	BRUSH SET	1						W	
	(A=E13548)										
31	3	129698-77130	BRUSH	2						W	
	(A=E13548)										
32	3	129698-77150	SPRING, BRUSH	4						W	
	(A=E13548)										
33	2	129698-77160	COVER ASSY	1						W	
	(A=E13548)										
34	3	129698-77170	BEARING	1						W	
	(A=E13548)										
35	2	129698-77260	CASE ASSY	1						W	
	(A=E13548)										
36	3	X2114535200	METAL, STARTER	1						W	
	(A=E13548)										
37	2	129698-77270	LEVER SET, SHIFT	1						W	
	(A=E13548)										
38	2	129698-77280	COVER KIT	1						W	
	(A=E13548)										
39	2	129698-77240	GEAR	3						W	
	(A=E13548)										
40	2	129698-77250	WASHER SET	1						W	
	(A=E13548)										
41	2	129698-77180	BRACKET	1						W	
	(A=E13548)										
42	3	129698-77190	BRACKET	1						W	
	(A=E13548)										
43	2	129698-77200	GEAR, INTERNAL	1						W	
	(A=E13548)										
44	2	129698-77210	BRACKET	1						W	
	(A=E13548)										
45	2	129698-77220	PINION ASSY	1						W	
	(A=E13548)										
46	2	129698-77230	SHAFT	1						W	
	(A=E13548)										
47	2	124195-77770	BOLT, THROUGH	2						W	
	(A=E13548)										
48	1	26116-120252	BOLT, M12X 25 PLATED	2							
49	1	124550-77030	COVER, TERMINAL	1							

N:Old ◄Yes/No► New. Q:Old ◄No/Yes► New. R:Old ◄Yes/Yes► New. S:Old ◄No/No► New. W:Add. Z:Discontinued. F:Interchangeable by set. K:Q'ty Change

Copyright (C) YANMAR CO., LTD. All RightsReserved.

Fig.38. TENSION PULLEY

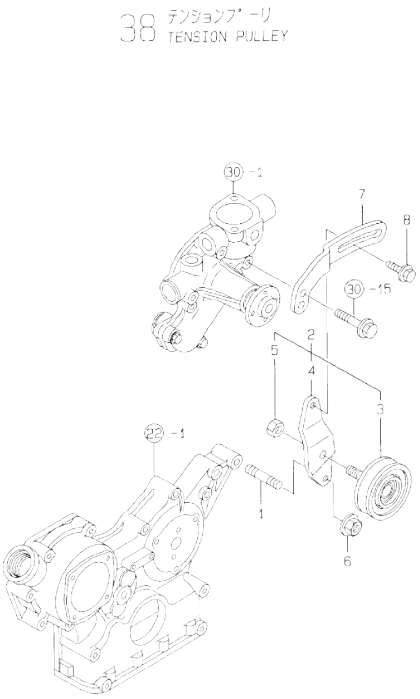

(A)=3TNE78A-GH (D)=
(B)= (E)=
(C)= (F)=

No.	Lev.	Parts No.	Description	Q'ty (A)	(B)	(C)	(D)	(E)	(F)	I	R
1	1	121450-01570	STUD	1							
2	1	171375-44300	PULLEY ASSY, TENSION	1							
3	2	171011-44301	PULLEY, TENSION	1							
4	2	171375-44320	BRACKET, PULLEY	1							
5	2	26706-100002	NUT, M10	1							
6	1	26366-100002	NUT, M10	1							
7	1	119810-77330	ADJUSTER	1							
8	1	26014-080252	BOLT, M8X 25	1							

N:Old ←Yes/No→ New. Q:Old ←No/Yes→ New, R:Old ←Yes/Yes→ New, S:Old ←No/No→ New, W:Add, Z:Discontinued, F:Interchangeable by set, K:Q'ty Change

Copyright (C) YANMAR CO., LTD. All RightsReserved.

Fig.39. ELECTRIC PARTS

(A)=3TNE78A-GH
(B)=
(C)=
(D)=
(E)=
(F)=

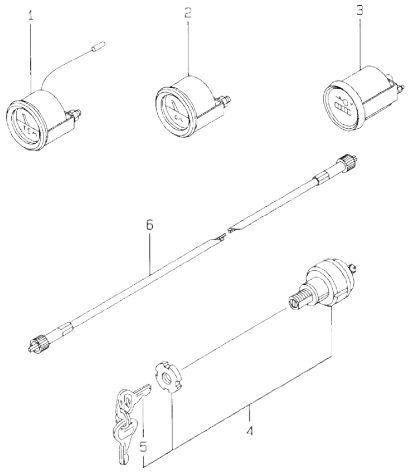

No.	Lev.	Parts No.	Description	Q'ty (A)	(B)	(C)	(D)	(E)	(F)	I	R
1	1	171010-77850	THERMOSTAT	2							
2	1	171090-91010	GAUGE	1							
3	1	171014-91101	TACHOMETER	1							
4	1	121400-91251	SWITCH, STARTER	1							
5	2	121400-91271	KEY, SWITCH	1							
6	1	121400-91140	SHAFT	1							

N:Old ◄Yes/No► New. Q:Old ◄No/Yes► New. R:Old ◄Yes/Yes► New. S:Old ◄No/No► New. W:Add. Z:Discontinued. F:Interchangeable by set. K:Q'ty Change

Copyright (C) YANMAR CO., LTD. All RightsReserved.

Fig.40. GASKET SET

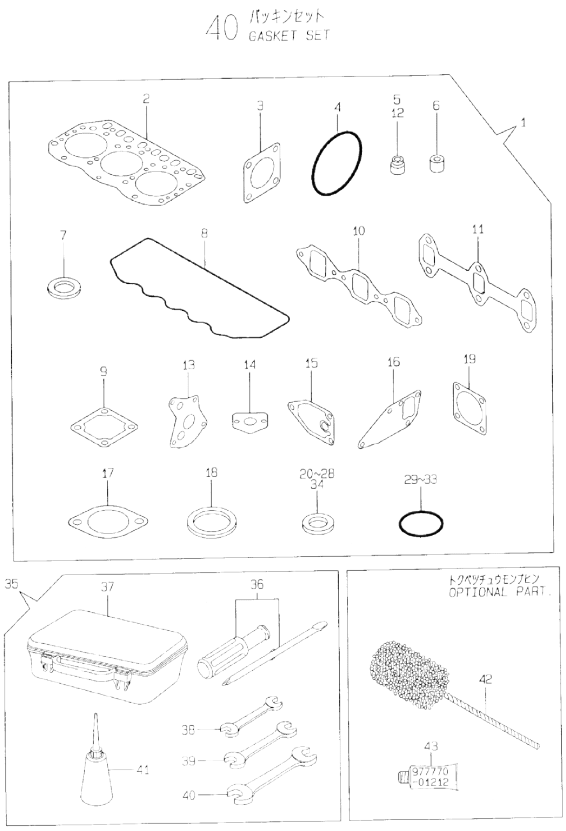

(A)=3TNE78A-GH
(B)=
(C)=
(D)=
(E)=
(F)=

No.	Lev.	Parts No.	Description	Q'ty (A)	(B)	(C)	(D)	(E)	(F)	I	R
1	1	719818-92620	GASKET SET	1							1
2	2	119818-01330	GASKET, HEAD	1							
3	2	124240-01883	GASKET	1							
4	2	121850-51960	O-RING	1							
5	2	124160-11340	SEAL, VALVE STEM	3							
6	2	119625-11871	PROTECTOR, NOZZLE	3							
7	2	119625-11880	SEAT, NOZZLE	3							
8	2	119865-11310	GASKET, BONNET	1							
9	2	129150-77511	GASKET	1							
10	2	119810-12111	GASKET, MANIFOLD	1							
11	2	119810-13110	GASKET	1							
12	2	124950-11340	SEAL, VALVE STEM	3							
13	2	129150-32020	GASKET, PUMP	1							
14	2	129150-35041	GASKET	1							
15	2	129150-35111	GASKET	1							
16	2	129150-42020	GASKET, WATER PUMP	1							
17	2	129795-49551	GASKET	2							
18	2	129150-49811	GASKET, THERMOSTAT	1							
19	2	124450-11900	GASKET	1							
20	2	104200-59170	GASKET, 12	2							
21	2	22190-080002	WASHER, SEAL 6	7							
22	2	129150-49360	GASKET	1							
22-1	2	129150-49360	GASKET	2						K	
	(A=E11224)										
23	2	23414-120000	GASKET, 12X1.0	10							
24	2	23414-080012	GASKET, 8X1.0	6							
25	2	23414-060000	GASKET, 6X1.0	6							
26	2	23414-140000	GASKET, 14X1.0	2							
27	2	124465-44950	GASKET, 16	2							
27-1	2	124465-44950	GASKET, 16	1						K	
	(A=E11224)										
28	2	23414-170000	GASKET, 17X1.0	1							
29	2	24311-000120	O-RING, 1AP12.0	3							
30	2	24311-000160	O-RING, 1AP16.0	3							
31	2	24311-000320	O-RING, 1AP32.0	2							
32	2	24341-000240	O-RING, 1AS24.0	1							
33	2	24341-000500	O-RING, 1AS50.0	1							
34	2	23414-100000	GASKET, 10X1.0	2							
35	1	721400-92102	BOX ASSY, TOOL	1							
36	2	104200-92350	DRIVER, SCREW	1							
37	2	104200-92600	BOX, TOOL	1							
38	2	28110-100120	SPANNER, 10X12	1							
39	2	28110-140170	SPANNER, 14X17	1							
40	2	28110-190220	SPANNER, 19X22	1							
41	2	28210-000140	OILER	1							
42	1	129400-92420	HONE	1							1
43	1	977770-01212	GASKET, LIQUID	1							1

Remarks
(1) OPTIONAL PART.

N:Old ←Yes/No→ New. Q:Old ←No/Yes→ New. R:Old ←Yes/Yes→ New. S:Old ←No/No→ New. W:Add. Z:Discontinued. F:Interchangeable by set. K:Q'ty Change

Copyright (C) YANMAR CO., LTD. All RightsReserved.

Fig.41. CYLINDER BLOCK

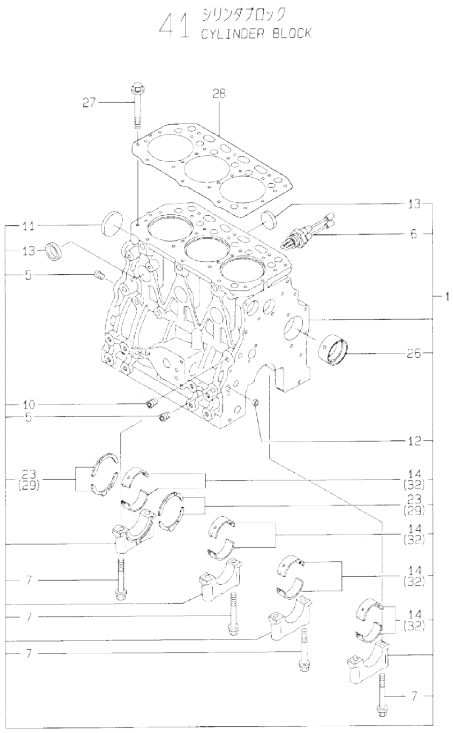

Remarks
(1) OVER-SIZE(O.S=0.25)PART.
(2) UNDER-SIZE(U.S=0.25)PART.

(A)=3TNE84-GH (D)=
(B)= (E)=
(C)= (F)=

No.	Lev.	Parts No.	Description	Q'ty (A)	(B)	(C)	(D)	(E)	(F)	I	R
1	1	729215-01560	BLOCK ASSY, CYLINDER	1							
5	2	124160-01910	PLUG, PT1/4	3							
6	2	46150-504600	HEATER	1							
6-1	2	124097-77900	HEATER,COOLING WATER	1						N	
	(A=E64472)										
7	2	129150-02020	BOLT, METAL CAP	8							
10	2	23871-010000	PLUG, R01	1							
11	2	27231-500000	PLUG 50	1							
12	2	27241-120000	PLUG, 12	2							
13	2	27241-300000	PLUG 30	6							
14	2	129001-02800	BEARING, MAIN	4							
23	2	129150-02930	BEARING, THRUST	2							
26	2	129795-02411	BUSH, CAMSHAFT	1							
27	1	129150-01200	BOLT, HEAD	14							
28	1	129002-01331	GASKET, HEAD	1							
29	1	129150-02940	BEARING, THRUST 0.25	2							1
32	1	129150-02870	BEARING, 0.25 US	4							2

N:Old ←Yes/No→ New. Q:Old ←No/Yes→ New, R:Old ←Yes/Yes→ New, S:Old ←No/No→ New, W:Add, Z:Discontinued. F:Interchangeable by set. K:Q'ty Change

Copyright (C) YANMAR CO., LTD. All RightsReserved.

Fig.42. GEAR HOUSING

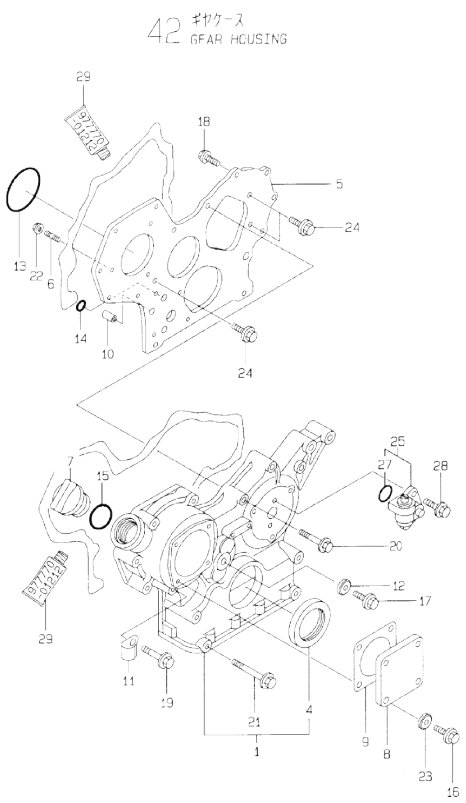

(A)=3TNE84-GH (D)=
(B)= (E)=
(C)= (F)=

No.	Lev.	Parts No.	Description	Q'ty (A)	(B)	(C)	(D)	(E)	(F)	I	R
1	1	719810-01500	CASE ASSY, GEAR	1							
4	2	129795-01800	SEAL, OIL	1							
5	1	129400-01520	FLANGE, GEAR CASE	1							
6	1	121450-01560	STUD, M8X22	3							
7	1	124160-01751	COVER, FILLER	1							
8	1	124240-01871	COVER	1							
9	1	124240-01883	GASKET	1							
10	1	129795-01950	PIPE, KNOCK L=18	2							
11	1	129150-03100	RETAINER, PIPE	1							
12	1	22190-080002	WASHER, SEAL 6	1							
13	1	121850-51960	O-RING	1							
14	1	24311-000160	O-RING, 1AP16.0	2							
15	1	24311-000320	O-RING, 1AP32.0	1							
16	1	26106-080122	BOLT, M8X 12 PLATED	4							
17	1	26106-080162	BOLT, M8X 16 PLATED	1							
18	1	26106-080202	BOLT, M8X 20 PLATED	2							
19	1	26106-080452	BOLT, M8X 45 PLATED	6							
20	1	26106-080552	BOLT, M8X 55 PLATED	3							
21	1	26106-080852	BOLT, M8X 85 PLATED	4							
22	1	26366-080002	NUT, M8	3							
23	1	22190-080002	WASHER, SEAL 6	4							
24	1	26106-080162	BOLT, M8X 16 PLATED	3							
25	1	129150-91400	GEAR	1							
27	2	24341-000240	O-RING, 1AS24.0	1							
28	1	26106-060162	BOLT, M6X 16 PLATED	2							
29	1	977770-01212	GASKET, LIQUID	1							1

Remarks
(1) OPTIONAL PART.

N:Old ←Yes/No→ New. Q:Old ←No/Yes→ New. R:Old ←Yes/Yes→ New. S:Old ←No/No→ New. W:Add. Z:Discontinued. F:Interchangeable by set. K:Q'ty Change

Copyright (C) YANMAR CO., LTD. All RightsReserved.

Fig.43. FLYWHEEL HOUSING &LUB.OIL SUMP

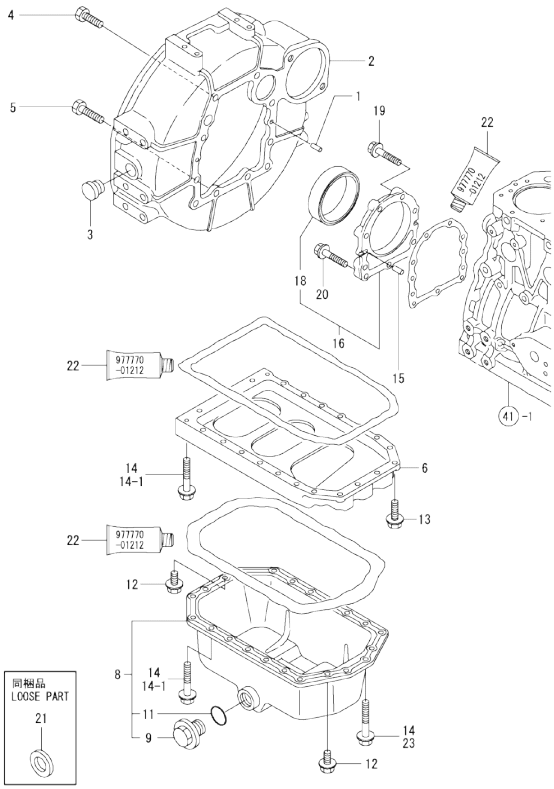

Remarks
(1) OPTIONAL PART.

(A)=3TNE84-GH (D)=
(B)= (E)=
(C)= (F)=

No.	Lev.	Parts No.	Description	Q'ty (A)	(B)	(C)	(D)	(E)	(F)	I	R
1	1	129100-01580	PIN, M8X16	2							
2	1	171301-01600	HOUSING, FLYWHEEL	1							
3	1	119620-01750	CAP	1							
4	1	26206-100252	BOLT, M10X 25 PLATED	6							
5	1	26206-100302	BOLT, M10X 30 PLATED	4							
6	1	129100-01730	SPACER, OIL SUMP	1							
8	1	129100-01760	SUMP ASSY, OIL	1							
9	2	171301-01640	PLUG, 22	1							
11	2	24341-000250	O-RING, 1AS25.0	1							
12	1	26106-080162	BOLT, M8X 16 PLATED	4							
13	1	26106-080252	BOLT, M8X 25 PLATED	2							
14	1	26106-080452	BOLT, M8X 45 PLATED	20							
14-1	1	26106-080452	BOLT, M8X 45 PLATED	16						K	
	(A=FROM 1ST)										
15	1	129100-01580	PIN, M8X16	2							
16	1	129100-01640	CASE ASSY, OIL SEAL	1							
18	2	129795-01780	SEAL, OIL	1							
19	1	26106-080302	BOLT, M8X 30 PLATED	6							
19-1	1	129486-01670	BOLT, M8X30	6						R	
	(A=E14805)										
20	1	26106-080352	BOLT, M8X 35 PLATED	3							
21	1	23414-220000	GASKET, 22X1.0	1							
22	1	977770-01212	GASKET, LIQUID	1							1
23	1	26106-080502	BOLT, M8X 50 PLATED	4						W	
	(A=FROM 1ST)										

N:Old ←Yes/No→ New. Q:Old ←No/Yes→ New. R:Old ←Yes/Yes→ New. S:Old ←No/No→ New. W:Add. Z:Discontinued. F:Interchangeable by set. K:Q'ty Change

Copyright (C) YANMAR CO., LTD. All RightsReserved.

Fig.44. CYLINDER HEAD & BONNET

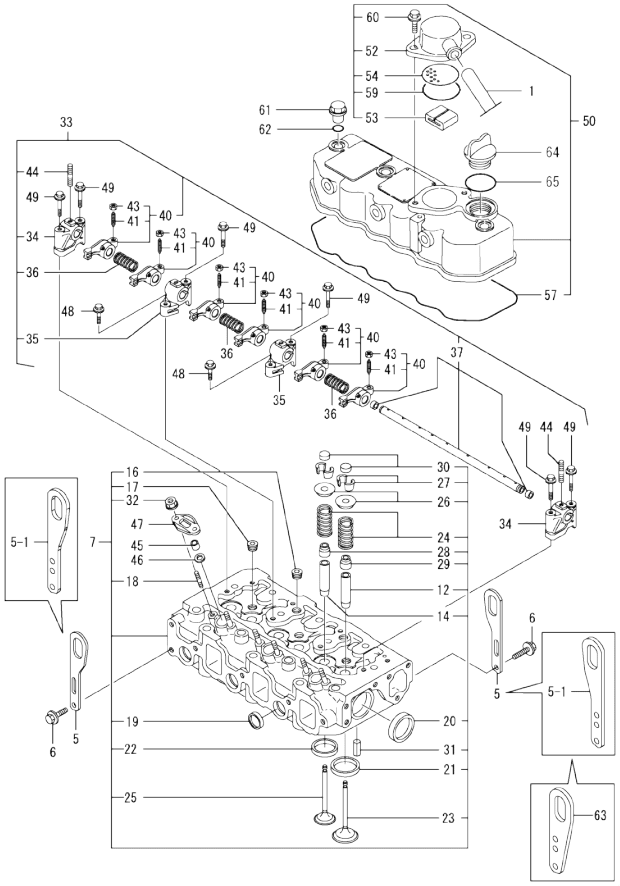

				(A)=3TNE84-GH		(D)=					
				(B)=		(E)=					
				(C)=		(F)=					
No.	Lev.	Parts No.	Description	Q'ty (A)	(B)	(C)	(D)	(E)	(F)	I	R
1	1	129150-03090	HOSE, ID16X2T	1							
5	1	124736-07900	LIFTER	2							
5-1	1	129900-07900	LIFTER	2						N	
5-2	(A=EXXX) 1 (A=*2009.08)	129900-07900	LIFTER	1						K	
6	1	26106-080142	BOLT, M8X 14 PLATED	4							
7	1	729202-11710	HEAD ASSY, CYLINDER	1							
12	2	120130-11860	GUIDE, VALVE	3							1
14	2	129150-11810	GUIDE, VALVE	3							1
16	2	23871-020000	PLUG, R02	2							
17	2	23871-030000	PLUG, R03	3							
18	2	26216-060202	STUD, M6X 20	6							
19	2	27241-220000	PLUG, 22	3							
20	2	27241-400000	PLUG, 40	2							
21	2	129470-11080	SEAT, INTAKE VALVE	3							
22	2	129470-11090	SEAT, EXHAUST VALVE	3							
23	2	129100-11100	VALVE, INTAKE	3							
24	2	129795-11120	SPRING, VALVE	6							
25	2	129100-11130	VALVE, EXHAUST	3							
26	2	129795-11180	RETAINER, SPRING	6							
27	2	27310-080001	COTTER, 8	6							
28	2	121400-11340	SEAL, VALVE STEM	3							
29	2	124460-11340	SEAL, VALVE STEM	3							
30	2	129150-11370	CAP, VALVE	6							
31	2	22351-060012	PIN, SPRING 6.0X12	2							
32	2	26366-060002	NUT, M6	6							
33	1	129155-11241	SHAFT ASSY, ROCKER	1							
34	2	129155-11260	SUPPORT, ROCKER ARM	2							
35	2	129155-11270	SUPPORT, ROCKER ARM	2							
36	2	129150-11280	SPRING	3							
37	2	129150-11290	SHAFT, ROCKER ARM	1							
40	2	729402-11650	ARM ASSY, ROCKER	6							
41	3	129150-11230	SCREW, VALVE ADJUST	6							
43	3	129150-11750	NUT, M8	6							
44	2	26226-080182	STUD, M8X 18	3							
45	1	119625-11871	PROTECTOR, NOZZLE	3							
46	1	119625-11880	SEAT, NOZZLE	3							
47	1	119625-11900	RETAINER, NOZZLE	3							
48	1	26106-080252	BOLT, M8X 25 PLATED	2							
49	1	26106-080502	BOLT, M8X 50 PLATED	6							
50	1	129100-11350	BONNET ASSY, HEAD	1							
52	2	129150-03020	COVER, BREATHER	1							
53	2	129150-03070	BAFFLE, BREATHER	1							
54	2	129150-03080	PLATE, BAFFLE	1							
57	2	129150-11310	GASKET, BONNET	1							
59	2	24341-000500	O-RING, 1AS50.0	1							
60	2	26106-080162	BOLT, M8X 16 PLATED	2							
61	1	124160-11360	KNOB	3							
62	1	24311-000120	O-RING, 1AP12.0	3							
63	1	119226-07900	LIFTER	1						W	

Remarks
(1) REPAIR PART.

N:Old ←Yes/No→ New. Q:Old ←No/Yes→ New. R:Old ←Yes/Yes→ New. S:Old ←No/No→ New. W:Add. Z:Discontinued. F:Interchangeable by set. K:Q'ty Change

++ CONTINUE ++

Copyright (C) YANMAR CO., LTD. All RightsReserved.

Fig.44. CYLINDER HEAD & BONNET

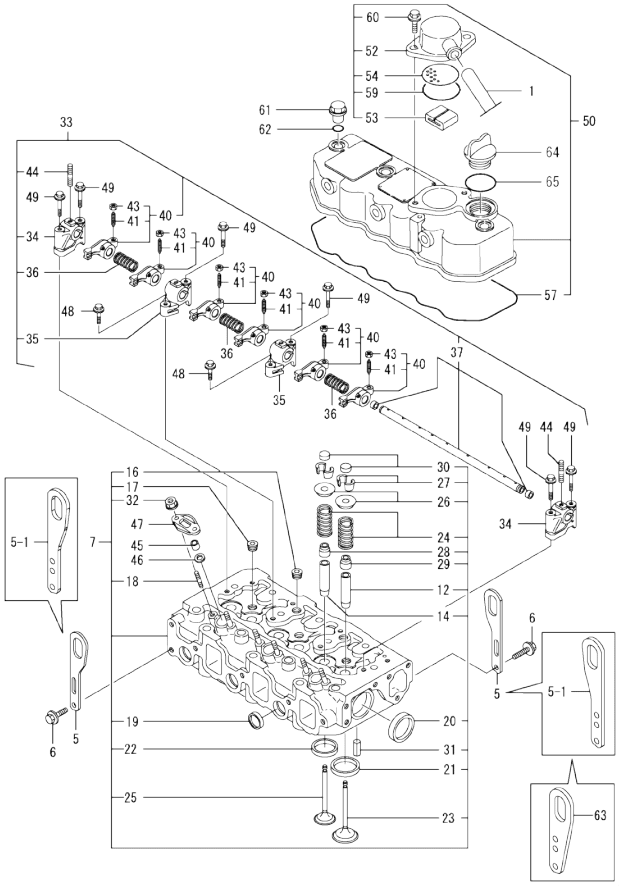

(A)=3TNE84-GH
(B)=
(C)=
(D)=
(E)=
(F)=

No.	Lev.	Parts No.	Description	Q'ty (A)	(B)	(C)	(D)	(E)	(F)	I	R
	(A=*2009.08)										
64	1	124160-01751	COVER, FILLER	1							
65	1	24311-000320	O-RING, 1AP32.0	1							

Remarks
(1) REPAIR PART.

N:Old ←Yes/No→ New. Q:Old ←No/Yes→ New. R:Old ←Yes/Yes→ New. S:Old ←No/No→ New. W:Add. Z:Discontinued. F:Interchangeable by set. K:Q'ty Change

Copyright (C) YANMAR CO., LTD. All RightsReserved.

Fig.45. SUCTION MANIFOLD

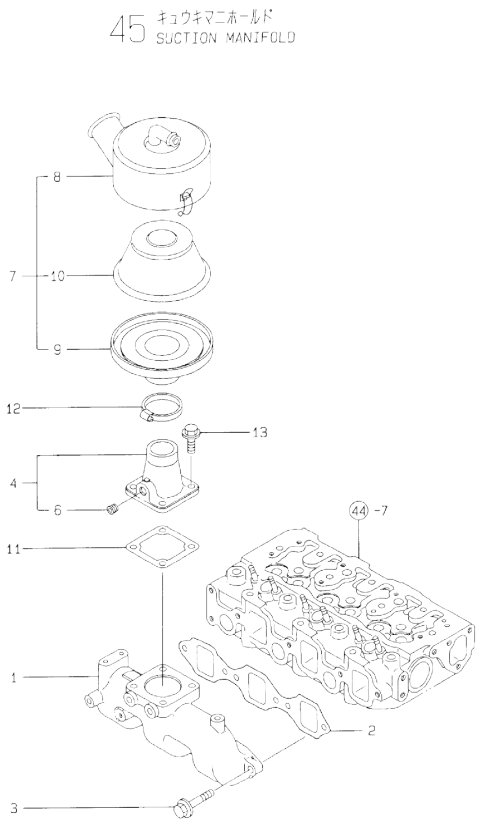

(A)=3TNE84-GH (D)=
(B)= (E)=
(C)= (F)=

No.	Lev.	Parts No.	Description	Q'ty (A)	(B)	(C)	(D)	(E)	(F)	I	R
1	1	129150-12100	MANIFOLD, AIR INTAKE	1							
2	1	129150-12111	GASKET, MANIFOLD	1							
3	1	26106-080252	BOLT, M8X 25 PLATED	4							
4	1	129470-12210	JOINT ASSY	1							
6	2	23871-010000	PLUG, R01	1							
7	1	129795-12501	SILENCER ASSY	1							
8	2	129795-12520	PIPE, AIR INTAKE	1							
9	2	129795-12530	PLATE	1							
10	2	129795-12540	ELEMENT	1							
11	1	129150-77511	GASKET	1							
12	1	23000-060000	CLAMP, 60	1							
13	1	26106-080162	BOLT, M8X 16 PLATED	4							

N:Old ←Yes/No→ New. Q:Old ←No/Yes→ New. R:Old ←Yes/Yes→ New. S:Old ←No/No→ New. W:Add. Z:Discontinued. F:Interchangeable by set. K:Q'ty Change

Copyright (C) YANMAR CO., LTD. All RightsReserved.

Fig.46. EXHAUST MANIFOLD

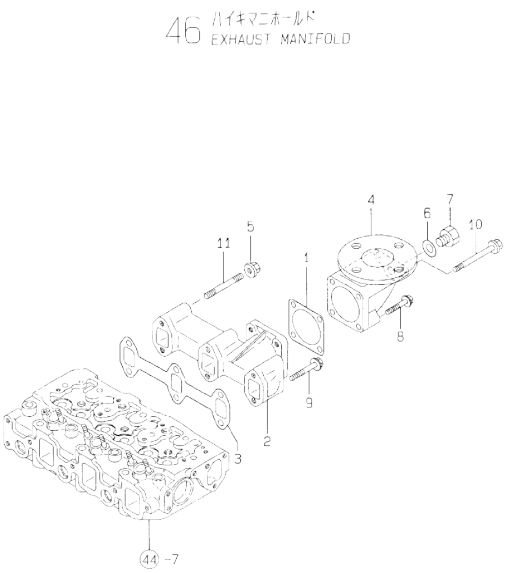

(A)=3TNE84-GH
(B)=
(C)=
(D)=
(E)=
(F)=

No.	Lev.	Parts No.	Description	Q'ty (A)	(B)	(C)	(D)	(E)	(F)	I	R
1	1	124450-11900	GASKET	1							
2	1	129100-13110	MANIFOLD, EXHAUST	1							
3	1	129150-13110	GASKET	1							
4	1	171083-13300	BEND, EXHAUST 50A	1							
5	1	194990-22050	NUT, M8	2							
6	1	23414-170000	GASKET, 17X1.0	1							
7	1	23894-030002	PLUG, G3/8	1							
8	1	26106-080452	BOLT, M8X 45 PLATED	2							
9	1	26106-080802	BOLT, M8X 80 PLATED	4							
10	1	26106-080952	BOLT, M8X 95 PLATED	2							
11	1	26216-080802	STUD, M8X 80	2							

N:Old ◄Yes/No► New. Q:Old ◄No/Yes► New, R:Old ◄Yes/Yes► New, S:Old ◄No/No► New, W:Add, Z:Discontinued, F:Interchangeable by set, K:Q'ty Change

Copyright (C) YANMAR CO., LTD. All RightsReserved.

Fig.47. CAMSHAFT & DRIVING GEAR

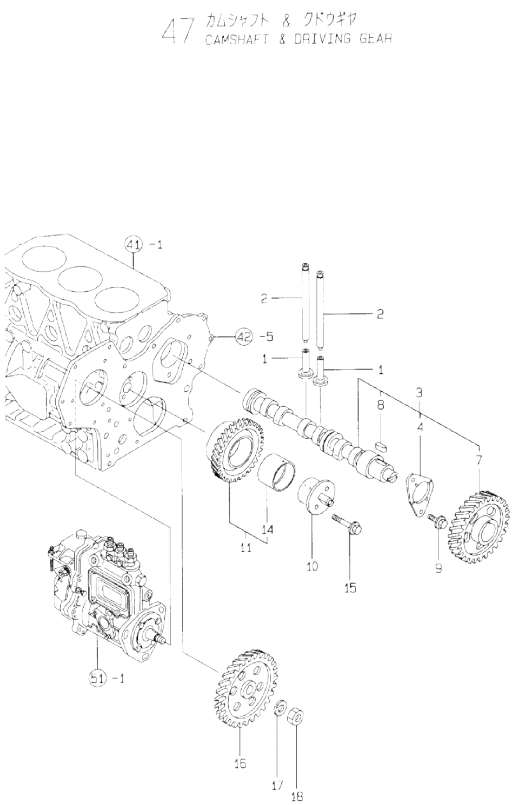

(A)=3TNE84-GH (D)=
(B)= (E)=
(C)= (F)=

No.	Lev.	Parts No.	Description	Q'ty (A)	(B)	(C)	(D)	(E)	(F)	I	R
1	1	129150-14200	TAPPET	6							
2	1	129150-14400	ROD, PUSH L=178	6							
3	1	129129-14580	CAMSHAFT ASSY	1							
4	2	129150-02450	BEARING, THRUST	1							
7	2	129150-14101	GEAR, CAMSHAFT	1							
8	2	22512-070140	KEY, 7X 14	1							
9	1	26106-080162	BOLT, M8X 16 PLATED	2							
9-1	1 (A=E14443)	26106-080142	BOLT, M8X 14 PLATED	2						N	
10	1	129100-25061	SHAFT, IDLE	1							
11	1	129150-25101	GEAR ASSY, IDLE	1							
14	2	129150-25920	BUSH, IDLE GEAR	1							1
15	1	26106-080452	BOLT, M8X 45 PLATED	2							
16	1	129100-25900	GEAR, PUMP	1							
17	1	22217-120000	WASHER, SPRING 12	1							
18	1	26716-120002	NUT, M12	1							

Remarks
(1) REPAIR PART.

N:Old ←Yes/No→ New. Q:Old ←No/Yes→ New. R:Old ←Yes/Yes→ New. S:Old ←No/No→ New. W:Add. Z:Discontinued. F:Interchangeable by set. K:Q'ty Change

Copyright (C) YANMAR CO., LTD. All RightsReserved.

Fig.48. CRANKSHAFT & PISTON

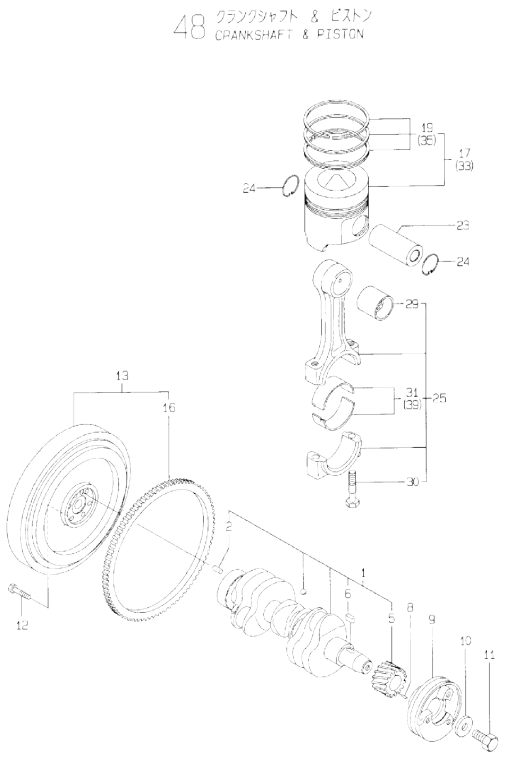

Remarks
(1) REPAIR PART.
(2) OVER-SIZE(O.S=0.25)PART.
(3) UNDER-SIZE(U.S=0.25)PART.

(A)=3TNE84-GH (D)=
(B)= (E)=
(C)= (F)=

No.	Lev.	Parts No.	Description	Q'ty (A)	(B)	(C)	(D)	(E)	(F)	I	R
1	1	129001-21000	CRANKSHAFT ASSY	1							
2	2	129100-01580	PIN, M8X16	1							
5	2	129150-21200	GEAR, CRANKSHAFT	1							
6	2	22512-070140	KEY, 7X 14	1							
8	1	22351-040010	PIN, SPRING 4.0X10	1							
9	1	171340-21650	V-PULLEY	1							
10	1	129795-21661	WASHER	1							
11	1	121850-21680	BOLT	1							
12	1	121111-21501	BOLT, FLYWHEEL	6							
13	1	171340-21580	FLYWHEEL ASSY	1							
16	2	119865-21600	GEAR, RING	1							
17	1	129002-22090	PISTON ASSY	3							
19	2	129002-22510	RING SET, PISTON	3							
23	1	129202-22300	PIN, PISTON D26 L70	3							
24	1	22252-000260	RING, 26	6							
25	1	729402-23100	ROD ASSY, CONNECTING	3							
29	2	129100-23910	BEARING, PISTON PIN	3							1
30	2	121550-23200	BOLT, CONNECTING ROD	6							
31	2	129150-23600	BEARING, CRANK PIN	3							
33	1	129002-22900	PISTON ASSY, 0.25 OS	3							2
35	2	129002-22950	RING SET, 0.25 OS	3							2
39	1	129150-23610	BEARING, 0.25 US	3							3

N:Old ←Yes/No→ New. Q:Old ←No/Yes→ New, R:Old ←Yes/Yes→ New, S:Old ←No/No→ New, W:Add, Z:Discontinued, F:Interchangeable by set, K:Q'ty Change

Copyright (C) YANMAR CO., LTD. All RightsReserved.

Fig.49. LUB.OIL SYSTEM

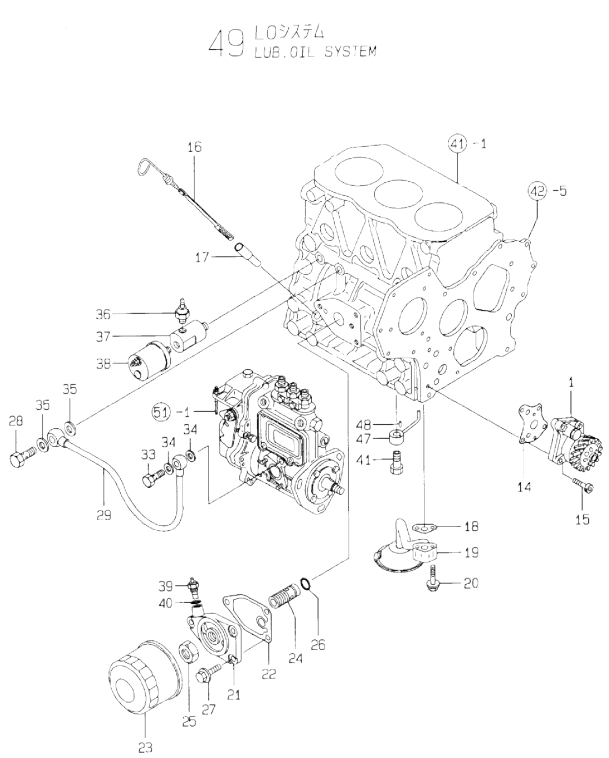

(A)=3TNE84-GH (D)=
(B)= (E)=
(C)= (F)=

No.	Lev.	Parts No.	Description	Q'ty (A)	(B)	(C)	(D)	(E)	(F)	I	R
1	1	129001-32001	PUMP ASSY, OIL	1							
14	1	129150-32020	GASKET, PUMP	1							
15	1	26450-060252	BOLT, M6X 25	4							
16	1	129136-34800	DIPSTICK, OIL	1							
17	1	121520-34810	GUIDE, DIPSTICK	1							
18	1	129150-35041	GASKET	1							
19	1	129100-35301	PIPE ASSY, OIL INLET	1							
20	1	26106-080352	BOLT, M8X 35 PLATED	2							
21	1	171375-35100	BRACKET, STRAINER	1							
22	1	129150-35111	GASKET	1							
23	1	129150-35151	FILTER, D80XL80	1							
24	1	129001-35300	BOLT, FILTER	1							
25	1	129150-35350	NUT	1							
26	1	24311-000160	O-RING, 1AP16.0	1							
27	1	26106-080202	BOLT, M8X 20 PLATED	3							
28	1	124160-39140	BOLT, PIPE JOINT M10	1							
29	1	129150-39450	PIPE ASSY, OIL	1							
33	1	124550-59820	BOLT, PIPE JOINT M8	1							
34	1	23414-080000	GASKET, 8X1.0	2							
35	1	23414-100000	GASKET, 10X1.0	2							
36	1	124160-39450	SWITCH, 0.5KG	1							
37	1	171375-39601	DAMPER, 1/8	1							
38	1	144626-91560	SENSOR	1							
39	1	124250-49351	SENSOR	1							
40	1	129150-49360	GASKET	1							
41	1	129792-39410	VALVE ASSY, CHECK	3							
47	1	129553-39650	NOZZLE	3							
48	1	22351-030010	PIN, SPRING 3.0X10	3							

N:Old ◄Yes/No► New. Q:Old ◄No/Yes► New. R:Old ◄Yes/Yes► New. S:Old ◄No/No► New. W:Add. Z:Discontinued. F:Interchangeable by set. K:Q'ty Change

Copyright (C) YANMAR CO., LTD. All RightsReserved.

Fig.50. COOLING WATER SYSTEM

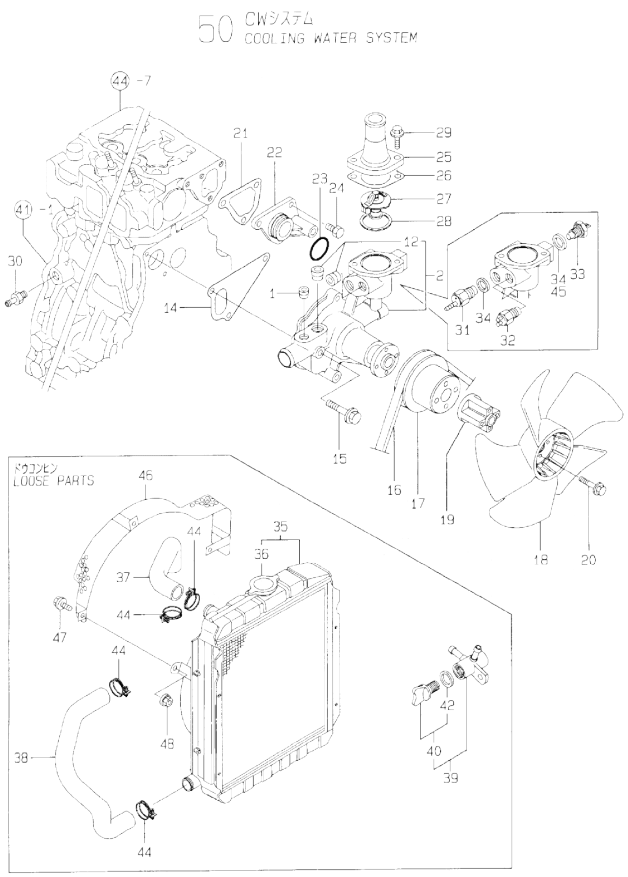

(A)=3TNE84-GH
(B)=
(C)=
(D)=
(E)=
(F)=

No.	Lev.	Parts No.	Description	Q'ty (A)	(B)	(C)	(D)	(E)	(F)	I	R
1	1	121850-11860	PLUG, PT1/4	1							
2	1	129001-42002	PUMP ASSY, WATER	1							
12	2	23871-030000	PLUG, R03	2							
14	1	129100-42020	GASKET, WATER PUMP	1							
15	1	26106-080602	BOLT, M8X 60 PLATED	3							
16	1	119831-42290	V-BELT, A37.5	1							
17	1	129155-42350	V-PULLEY	1							
18	1	119265-44740	FAN, D=310X5F	1							
19	1	119256-44760	SPACER, FAN	1							
20	1	26106-060602	BOLT, M6X 60 PLATED	4							
21	1	129100-49840	GASKET	1							
22	1	129001-42040	JOINT	1							
23	1	24321-000300	O-RING, 1AG30.0	1							
24	1	26106-080162	BOLT, M8X 16 PLATED	3							
25	1	129350-49560	COVER, THERMOSTAT	1							
26	1	129795-49551	GASKET	1							
27	1	129155-49800	THERMOSTAT, 71	1							
28	1	129150-49811	GASKET, THERMOSTAT	1							
29	1	26106-080202	BOLT, M8X 20 PLATED	2							
30	1	121550-49111	JOINT, PT1/4	1							
31	1	121250-44901	SWITCH, 110	1							
32	1	171375-44900	SWITCH, 15	1							
33	1	171375-44910	SENSOR	1							
34	1	124465-44950	GASKET, 16	2							
34-1	1	124465-44950	GASKET, 16	1						K	
	(A=E16528)										
35	1	171340-44510	RADIATOR	1							
36	2	123682-44210	CAP, RADIATOR	1							
37	1	171301-49010	PIPE, WATER	1							
38	1	129211-49020	PIPE, WATER	1							
39	1	129150-49100	COCK ASSY, 3-WAY	1							
40	2	129150-49080	COCK, DRAIN	1							
42	3	119629-49080	GASKET	1							
44	1	23010-038000	CLAMP, 38	4							
45	1	129150-49360	GASKET	1						W	
	(A=E16528)										
46	1	171301-44560	PROTECTOR, FAN	1							
47	1	26013-080142	BOLT, M8X 14	3							
48	1	26366-080002	NUT, M8	3							

N:Old ←Yes/No→ New. Q:Old ←No/Yes→ New. R:Old ←Yes/Yes→ New. S:Old ←No/No→ New. W:Add. Z:Discontinued. F:Interchangeable by set. K:Q'ty Change

Copyright (C) YANMAR CO., LTD. All RightsReserved.

Fig.51. FUEL INJECTION PUMP

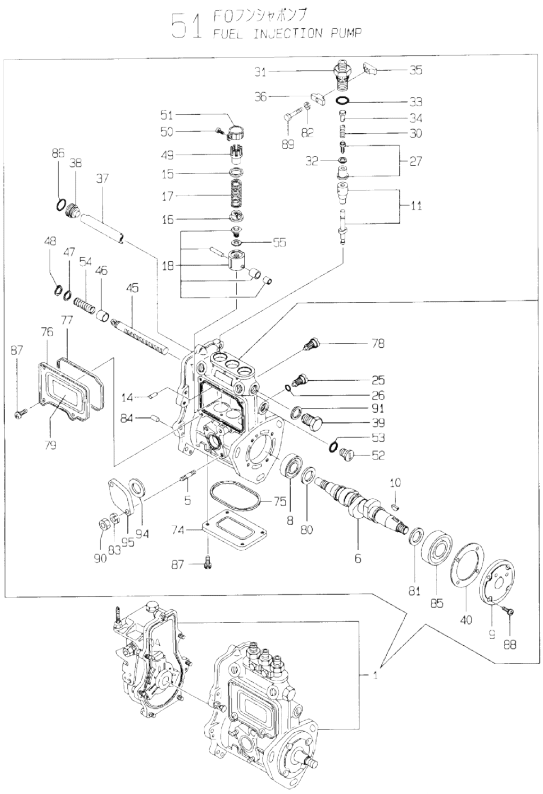

Remarks
(1) GOVERNOR ASSY(FIG.52) IS INCORPORATED IN THIS FOP.CMP (REF.NO.1).

(A)=3TNE84-GH (D)=
(B)= (E)=
(C)= (F)=

No.	Lev.	Parts No.	Description	Q'ty (A)	(B)	(C)	(D)	(E)	(F)	I	R
1	1	729205-51400	PUMP ASSY, INJECTION	1							1
5	2	129155-51020	STUD	2							
6	2	119810-51040	CAMSHAFT	1							
8	2	129155-51050	BEARING, 17BM001D	1							
9	2	129155-51060	SUPPORT, CAMSHAFT	1							
10	2	122710-51090	KEY	1							
11	2	129412-51200	PLUNGER ASSY	3							
11-1	2 (A=E18143)	129403-51200	PLUNGER ASSY	3						N	
14	2	129155-51140	PIN	3							
15	2	174307-51170	RETAINER, SPRING A	3							
16	2	129155-51180	RETAINER, SPRING	3							
17	2	124950-51190	SPRING, PLUNGER	3							
18	2	129155-51200	TAPPET ASSY	3							
25	2	129155-51270	STOPPER, TAPPET	3							
26	2	129155-51280	O-RING, S6	3							
27	2	105300-51300	VALVE ASSY, DELIVERY	3							
30	2	129155-51320	SPRING, DELIVERY	3							
31	2	129155-51340	RETAINER	3							
32	2	124550-51350	GASKET, DELIVERY	3							
33	2	124550-51370	O-RING	3							
34	2	129155-51370	STOPPER, VALVE	3							
35	2	129155-51380	STOPPER	2							
36	2	129155-51390	STOPPER	2							
37	2	129155-51400	DEFLECTOR	1							
38	2	129155-51410	BOLT	1							
39	2	129155-51420	PLUG, M16	1							
40	2	129155-51450	SHIM SET, ADJUSTING	1							
45	2	129155-51500	RACK, CONTROL	1							
46	2	129155-51521	BUSH, RACK	1							
47	2	129155-51530	SPACER	1							
48	2	129155-51540	CIRCLIP	1							
49	2	129155-51550	PINION, CONTROL	3							
50	2	122117-51560	SCREW	3							
51	2	174307-51560	PINION	3							
52	2	129155-51570	PLUG, M12	1							
53	2	129155-51580	O-RING	1							
54	2	129155-51591	SPRING, RACK	1							
55	2	129155-51600	SHIM SET, ADJUSTING	3							
74	2	129155-51700	COVER	1							
75	2	129155-51710	GASKET	1							
76	2	129155-51750	COVER	1							
77	2	129155-51760	GASKET	1							
78	2	129155-51790	STOOPER, RACK	1							
79	2	129156-51910	LABEL, CAUTION	1							
80	2	129155-51930	SPACER, T=3.25	1							
81	2	129155-51940	SPACER, T=1.5	1							
82	2	22217-050000	WASHER, SPRING 5	2							
83	2	22217-060000	WASHER, SPRING 6	2							
84	2	22351-050010	PIN, SPRING 5.0X10	2							
85	2	24101-063034	BEARING, BALL 6303	1							

N:Old ←Yes/No→ New. Q:Old ←No/Yes→ New. R:Old ←Yes/Yes→ New. S:Old ←No/No→ New. W:Add. Z:Discontinued. F:Interchangeable by set. K:Q'ty Change

++ CONTINUE ++

Copyright (C) YANMAR CO., LTD. All RightsReserved.

Fig.51. FUEL INJECTION PUMP

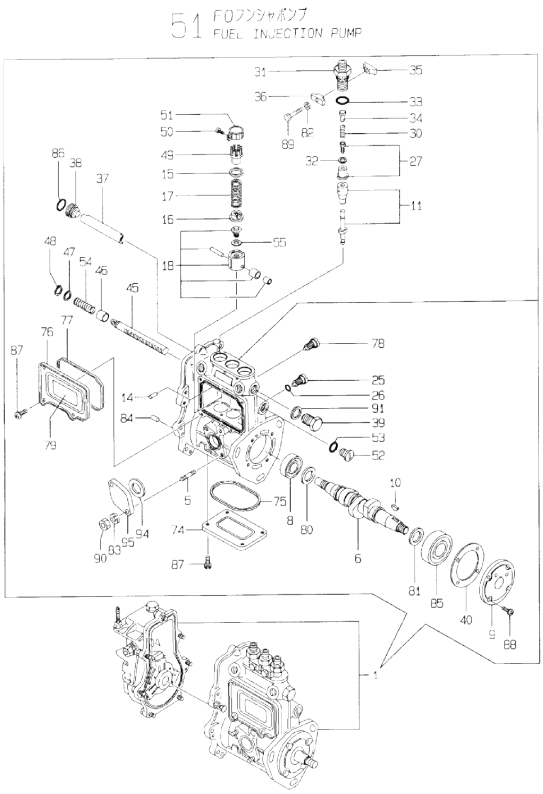

Remarks
(1) GOVERNOR ASSY(FIG.52) IS INCORPORATED IN THIS FOP.CMP (REF.NO.1).

(A)=3TNE84-GH (D)=
(B)= (E)=
(C)= (F)=

No.	Lev.	Parts No.	Description	Q'ty (A)	(B)	(C)	(D)	(E)	(F)	I	R
86	2	24341-000160	O-RING, 1AS16.0	1							
87	2	26022-050102	SCREW, M5X10	8							
88	2	26022-060162	SCREW, M6X16	4							
89	2	26116-050302	BOLT, M5X 30 PLATED	2							
90	2	26716-060002	NUT, M6	2							
91	2	22190-160002	WASHER, SEAL 16	1							
94	2	129155-52050	GASKET	1							
95	2	129100-52200	COVER	1							

N:Old ←Yes/No→ New. Q:Old ←No/Yes→ New. R:Old ←Yes/Yes→ New. S:Old ←No/No→ New. W:Add. Z:Discontinued. F:Interchangeable by set. K:Q'ty Change

Copyright (C) YANMAR CO., LTD. All RightsReserved.

Fig.52. GOVERNOR

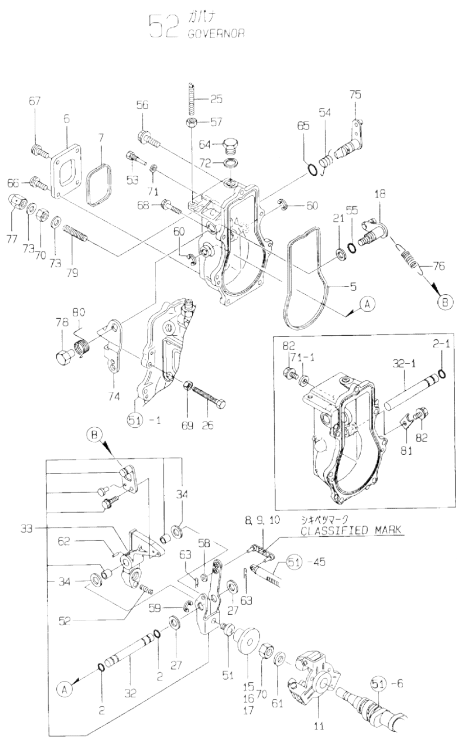

(A)=3TNE84-GH
(B)=
(C)=
(D)=
(E)=
(F)=

No.	Lev.	Parts No.	Description	Q'ty (A)	(B)	(C)	(D)	(E)	(F)	I	R
2	2	129155-51280	O-RING, S6	2							
2-1	2	129155-51280	O-RING, S6	1						K	
	(A=E15837)										
5	2	129155-61050	GASKET	1							
6	2	129155-61060	COVER, GOVERNOR CASE	1							
7	2	129155-61070	GASKET	1							
8	2	129155-61120	LINK, L=30 MARK 0	1							1
9	2	129155-61130	LINK, L=31 MARK 1	1							1
10	2	129155-61140	LINK, L=30.5 MARK 05	1							1
11	2	129155-61201	WEIGHT ASSY,GOVERNOR	1							
15	2	129155-61341	SLEEVE	1							2
16	2	129155-61350	SLEEVE, L=24.9	1							2
17	2	129155-61360	SLEEVE, L=25.2	1							2
18	2	129100-61400	SHAFT ASSY	1							
21	2	129155-61430	SPACER	1							
25	2	129155-61450	BOLT, LIMITER	1							
26	2	129155-61460	BOLT, IDLE	1							
27	2	129155-61480	SPACER ASSY	2							
32	2	129155-61490	SHAFT	1							
32-1	2	129155-61380	SHAFT	1						S	
	(A=E15837)										
33	2	129100-61501	LEVER ASSY, GOVERNOR	1							
34	3	174307-51700	SHIM SET	2							
51	2	129155-61540	SHIFTER	1							
52	2	129500-61650	SPRING, FUEL CONTROL	1							
53	2	129155-61810	PIN	1							
54	2	129100-61821	SPRING, RETURN	1							
55	2	129155-61830	O-RING, S10	1							
56	2	129155-61950	BOLT	1							
57	2	124550-66370	NUT, M6	1							
58	2	22117-040000	WASHER, 4	1							
59	2	22272-000040	RING, E- 4	1							
60	2	22272-000060	RING, E- 6	2						Z	
	(A=E15837)										
61	2	22287-120000	WASHER, 12	1							
62	2	22351-030016	PIN, SPRING 3.0X16	1							
63	2	22372-040000	PIN, SNAP 4	2							
64	2	23887-100002	PLUG, 10	1							
65	2	24311-240100	O-RING, 1AP10A	1							
66	2	26022-050102	SCREW, M5X10	2							
67	2	26023-050102	SCREW, M5X10	2							
68	2	26106-060202	BOLT, M6X 20 PLATED	6							
69	2	26756-060002	NUT, LOCK M6	1							
70	2	26776-120002	NUT, LOCK M12	2							
71	2	22190-060002	WASHER, SEAL 6	1							
71-1	2	22190-060002	WASHER, SEAL 6	2						K	
	(A=E15837)										
72	2	22190-100002	WASHER, SEAL 10	1							
73	2	22190-120002	WASHER, SEAL 12	2							
74	2	171488-61440	LEVER, CONTROL	1							
75	2	129155-61802	LEVER, STOP	1							

Remarks
(1) SELECTIVE PARTS;CERTAIN THE CLASSIFICATION MARK,THEN PLACE YOUR ORDER.(REF.TO.ILLUSTRATION).
(2) SELECTIVE PART.
* THIS FIGURE(GOVERNOR ASSY)IS INCORPORATED IN THE FUEL INJECTION PUMP ASSY(FIG.51).

N:Old ←Yes/No→ New. Q:Old ←No/Yes→ New. R:Old ←Yes/Yes→ New. S:Old ←No/No→ New. W:Add. Z:Discontinued. F:Interchangeable by set. K:Q'ty Change

++ CONTINUE ++

Copyright (C) YANMAR CO., LTD. All RightsReserved.

Fig.52. GOVERNOR

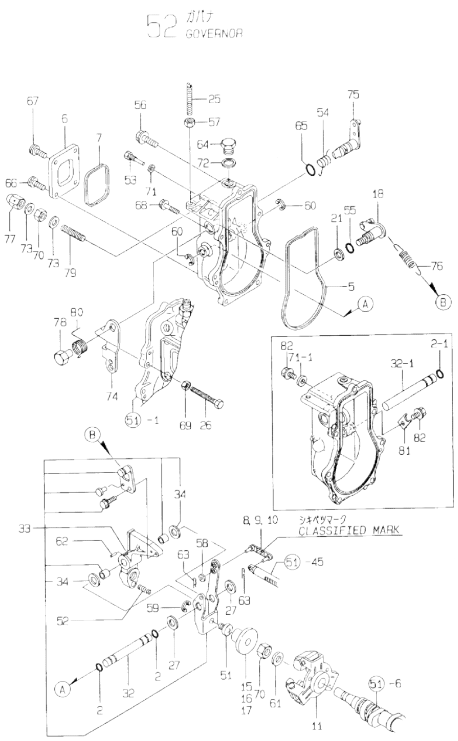

Remarks
(1) SELECTIVE PARTS;CERTAIN THE CLASSIFICATION MARK,THEN PLACE YOUR ORDER.(REF.TO.ILLUSTRATION).
(2) SELECTIVE PART.
* THIS FIGURE(GOVERNOR ASSY)IS INCORPORATED IN THE FUEL INJECTION PUMP ASSY(FIG.51).

(A)=3TNE84-GH (D)=
(B)= (E)=
(C)= (F)=

No.	Lev.	Parts No.	Description	Q'ty (A)	(B)	(C)	(D)	(E)	(F)	I	R
76	2	129500-61700	SPRING, GOVERNOR	1							
77	2	26687-120002	NUT, CAP M12	1							
78	2	129255-61410	NUT, LOCK	1							
79	2	129155-61470	BOLT, CONTROL	1							
80	2	129255-61420	SPRING, RETURN	1							
81	2	119660-61901	RETAINER, SHAFT	1							W
	(A=E15837)										
82	2	26106-060102	BOLT, M6X 10 PLATED	2							W
	(A=E15837)										

N:Old ←Yes/No→ New. Q:Old ←No/Yes→ New. R:Old ←Yes/Yes→ New. S:Old ←No/No→ New. W:Add. Z:Discontinued. F:Interchangeable by set. K:Q'ty Change

Copyright (C) YANMAR CO., LTD. All RightsReserved.

Fig.53. FUEL FEED PUMP

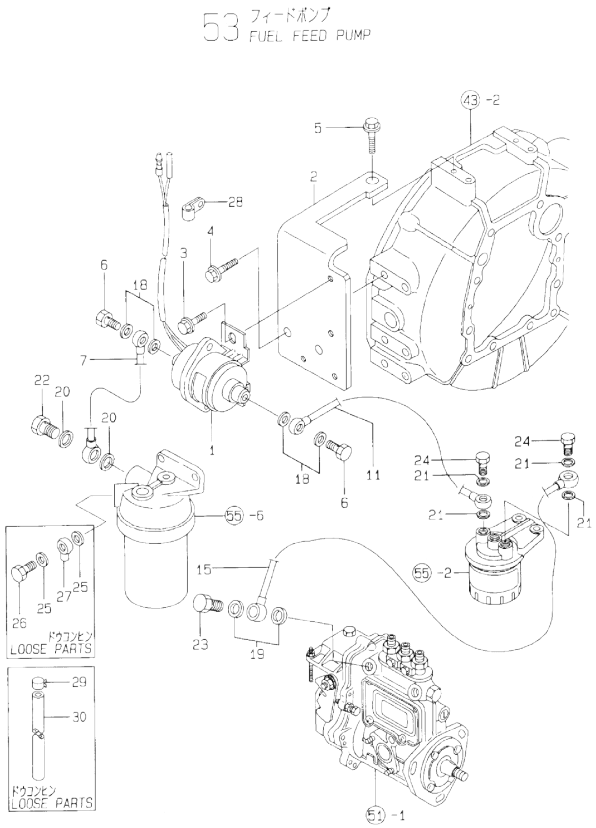

(A)=3TNE84-GH (D)=
(B)= (E)=
(C)= (F)=

No.	Lev.	Parts No.	Description	Q'ty (A)	(B)	(C)	(D)	(E)	(F)	I	R
1	1	124790-52201	PUMP ASSY, FUEL FEED	1							
2	1	171375-52501	BRACKET, PUMP	1							
3	1	26106-060102	BOLT, M6X 10 PLATED	2							
4	1	26106-080162	BOLT, M8X 16 PLATED	2							
5	1	26106-100162	BOLT, M10X 16 PLATED	1							
6	1	105582-59150	BOLT, PIPE JOINT	2							
7	1	171375-59500	PIPE ASSY, FUEL	1							
11	1	171375-59511	PIPE ASSY, FUEL	1							
15	1	171375-59521	PIPE ASSY, FUEL	1							
18	1	23414-080012	GASKET, 8X1.0	4							
19	1	23414-120000	GASKET, 12X1.0	2							
20	1	23414-120000	GASKET, 12X1.0	2							
21	1	23414-120000	GASKET, 12X1.0	4							
22	1	23857-060000	BOLT, JOINT 6	1							
23	1	23857-060000	BOLT, JOINT 6	1							
24	1	23857-060000	BOLT, JOINT 6	2							
25	1	23414-120000	GASKET, 12X1.0	2							
26	1	23857-060000	BOLT, JOINT 6	1							
27	1	103854-39540	JOINT, PIPE	1							
28	1	194440-51620	CLAMP	1							
29	1	124766-59050	CLIP, HOSE 12	4							
30	1	124732-59080	PIPE, FUEL D12X1000	1							

N:Old ←Yes/No→ New. Q:Old ←No/Yes→ New. R:Old ←Yes/Yes→ New. S:Old ←No/No→ New. W:Add. Z:Discontinued. F:Interchangeable by set. K:Q'ty Change

Copyright (C) YANMAR CO., LTD. All RightsReserved.

Fig.54. FUEL INJECTION VALVE

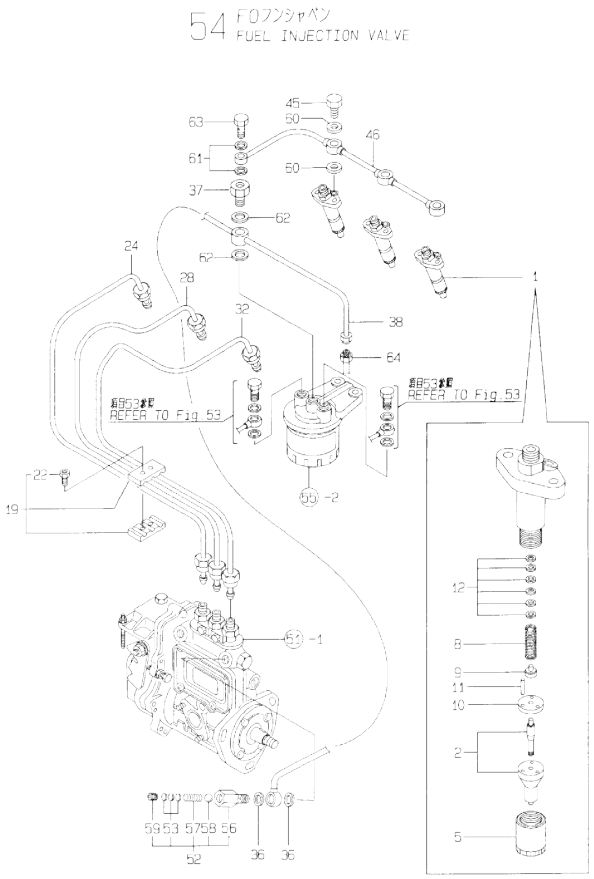

(A)=3TNE84-GH (D)=
(B)= (E)=
(C)= (F)=

No.	Lev.	Parts No.	Description	Q'ty (A)	(B)	(C)	(D)	(E)	(F)	I	R
1	1	729100-53300	VALVE ASSY,INJECTION	3							
2	2	129100-53000	VALVE ASSY,INJECTION	3							
5	2	114250-53080	NUT, NOZZLE D16.95	3							
8	2	114250-53120	SPRING, NOZZLE	3							
9	2	114250-53130	SEAT, SPRING	3							
10	2	114250-53140	PLATE	3							
11	2	114250-53210	PIN	6							
12	2	114250-53400	SHIM SET	3							
19	1	129150-59120	RETAINER, PIPE	1							
22	2	129150-59131	BOLT, M4X14	2							
24	1	129100-59811	PIPE ASSY, INJECTION	1							
28	1	129100-59821	PIPE ASSY, INJECTION	1							
32	1	129100-59831	PIPE ASSY, INJECTION	1							
36	1	104200-59170	GASKET, 12	2							
37	1	129495-59300	BOLT, PIPE JOINT	1							
38	1	171375-59530	PIPE ASSY, FUEL	1							
45	1	129491-59540	BOLT, PIPE JOINT M6	3							
46	1	171375-59551	PIPE ASSY, RETURN	1							
52	1	129100-59951	VALVE ASSY, CHECK	1							
53	2	129100-59850	SHIM SET	1							
56	2	129100-59961	BODY, VALVE	1							
57	2	129100-59970	SPRING	1							
58	2	24190-080001	BALL, STEEL 1/4	1							
59	2	27241-100000	PLUG, 10	1							
60	1	23414-060000	GASKET, 6X1.0	6							
61	1	23414-080012	GASKET, 8X1.0	2							
62	1	23414-140000	GASKET, 14X1.0	2							
63	1	23851-030000	JOINT BOLT 3	1							
64	1	43551-001451	UNION 8(M)	1							

N:Old ◄Yes/No► New. Q:Old ◄No/Yes► New. R:Old ◄Yes/Yes► New. S:Old ◄No/No► New. W:Add. Z:Discontinued. F:Interchangeable by set. K:Q'ty Change

Copyright (C) YANMAR CO., LTD. All RightsReserved.

Fig.55. FUEL FILTER

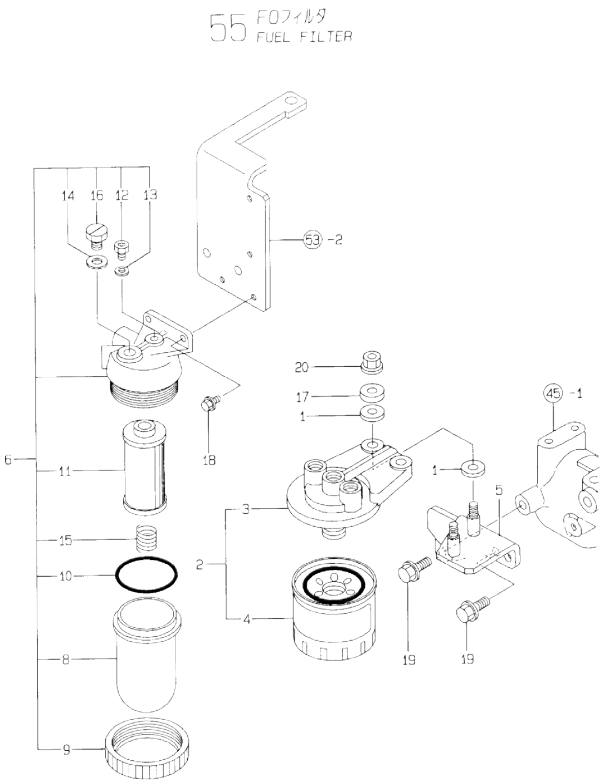

(A)=3TNE84-GH (D)=
(B)= (E)=
(C)= (F)=

No.	Lev.	Parts No.	Description	Q'ty (A)	(B)	(C)	(D)	(E)	(F)	I	R
1	1	160610-55460	INSULATOR	4							
2	1	129470-55601	FILTER ASSY, FUEL	1							
3	2	129470-55610	BODY, STRAINER	1							
4	2	129470-55701	STRAINER ASSY, FUEL	1							
5	1	171375-55612	BRACKET, STRAINER	1							
6	1	171081-55900	FILTER ASSY, PRE	1							
8	2	121370-55730	CUP, STRAINER	1							
9	2	110250-55610	RING, RETAINING	1							
10	2	103854-32050	O-RING	1							
11	2	171081-55910	SCREEN	1							
12	2	101720-55750	PLUG, 6	1							
13	2	23418-060000	GASKET, 6X1.0	1							
14	2	23414-080012	GASKET, 8X1.0	1							
15	2	121257-55720	SPRING	1							
16	2	135210-51900	PLUG	1							
17	1	121236-77340	SPACER	2							
18	1	26106-060142	BOLT, M6X 14 PLATED	2							
19	1	26106-080162	BOLT, M8X 16 PLATED	2							
20	1	26366-080002	NUT, M8	2							

N:Old ←Yes/No→ New. Q:Old ←No/Yes→ New. R:Old ←Yes/Yes→ New. S:Old ←No/No→ New. W:Add. Z:Discontinued. F:Interchangeable by set. K:Q'ty Change

Copyright (C) YANMAR CO., LTD. All RightsReserved.

Fig.56. ENGINE STOP DEVICE

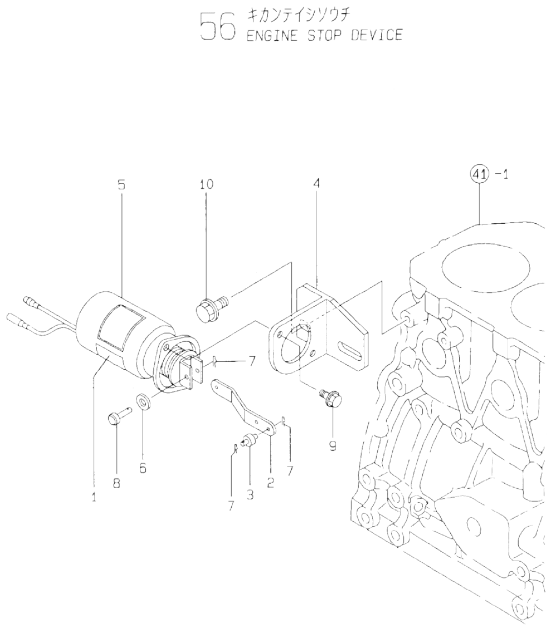

(A)=3TNE84-GH
(B)=
(C)=
(D)=
(E)=
(F)=

No.	Lev.	Parts No.	Description	Q'ty (A)	(B)	(C)	(D)	(E)	(F)	I	R
1	1	171010-65100	LABEL	1							
2	1	171335-65110	LINK, SOLENOID	1							
3	1	171335-65120	PIN	1							
4	1	171335-65130	BRACKET, SOLENOID	1							
5	1	171335-77951	SOLENOID, MAGNETIC	1							
6	1	22117-050000	WASHER, 5	1							
7	1	22360-050000	SNAP PIN 5	3							
8	1	22487-050160	PIN, H 5X 16	1							
9	1	26106-060122	BOLT, M6X 12 PLATED	2							
10	1	26106-080142	BOLT, M8X 14 PLATED	2							

N:Old ◄Yes/No► New. Q:Old ◄No/Yes► New, R:Old ◄Yes/Yes► New, S:Old ◄No/No► New, W:Add, Z:Discontinued, F:Interchangeable by set, K:Q'ty Change

Copyright (C) YANMAR CO., LTD. All RightsReserved.

Fig.57. STARTING MOTOR

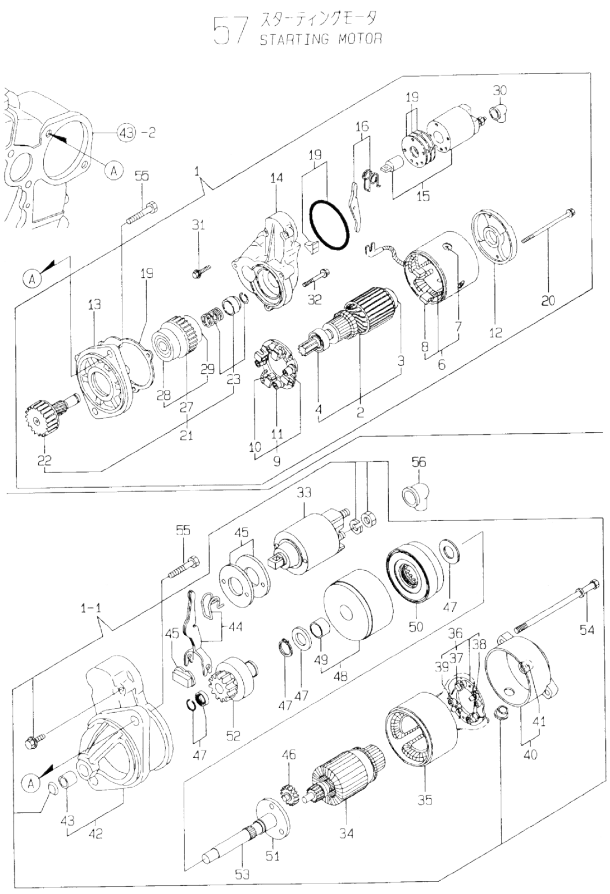

(A)=3TNE84-GH (D)=
(B)= (E)=
(C)= (F)=

No.	Lev.	Parts No.	Description	Q'ty (A)	(B)	(C)	(D)	(E)	(F)	I	R
1	1	171008-77010	STARTER, S114-483	1							
1-1	1	129698-77010	STARTER, 12V1.2KW	1							R
	(A=E19035)										
2	2	171008-77400	ARMATURE ASSY	1							Z
	(A=E19035)										
3	3	171008-77410	BEARING	1							Z
	(A=E19035)										
4	3	171008-77420	BEARING	1							Z
	(A=E19035)										
6	2	171008-77440	COIL ASSY, FIELD	1							Z
	(A=E19035)										
7	3	171008-77450	SCREW	4							Z
	(A=E19035)										
8	3	171008-77460	BRUSH (+)	2							Z
	(A=E19035)										
9	2	171008-77470	HOLDER ASSY, BRUSH	1							Z
	(A=E19035)										
10	3	171008-77480	BRUSH (-)	2							Z
	(A=E19035)										
11	3	171008-77490	SPRING, BRUSH	4							Z
	(A=E19035)										
12	2	171008-77500	COVER, REAR	1							Z
	(A=E19035)										
13	2	171008-77510	CASE, GEAR	1							Z
	(A=E19035)										
14	2	171008-77520	HOUSING, CENTER	1							Z
	(A=E19035)										
15	2	171008-77530	SWITCH, MAGNETIC	1							Z
	(A=E19035)										
16	2	171008-77540	LEVER SET	1							Z
	(A=E19035)										
19	2	171008-77571	COVER KIT, DUST	1							Z
	(A=E19035)										
20	2	171008-77640	BOLT, THROUGH	2							Z
	(A=E19035)										
21	2	171008-77650	PINION ASSY	1							Z
	(A=E19035)										
22	3	171008-77660	SHAFT	1							Z
	(A=E19035)										
23	3	171008-77670	STOPPER SET	1							Z
	(A=E19035)										
27	3	171008-77720	CLUTCH ASSY	1							Z
	(A=E19035)										
28	4	171008-77730	BEARING, BALL	1							Z
	(A=E19035)										
29	4	171008-77740	BEARING	1							Z
	(A=E19035)										
30	2	171008-77750	COVER	1							Z
	(A=E19035)										
31	2	26106-060322	BOLT, M6X 32 PLATED	2							Z
	(A=E19035)										

N:Old ←Yes/No→ New. Q:Old ←No/Yes→ New, R:Old ←Yes/Yes→ New, S:Old ←No/No→ New. W:Add. Z:Discontinued. F:Interchangeable by set. K:Q'ty Change

++ CONTINUE ++

Copyright (C) YANMAR CO., LTD. All RightsReserved.

Fig.57. STARTING MOTOR

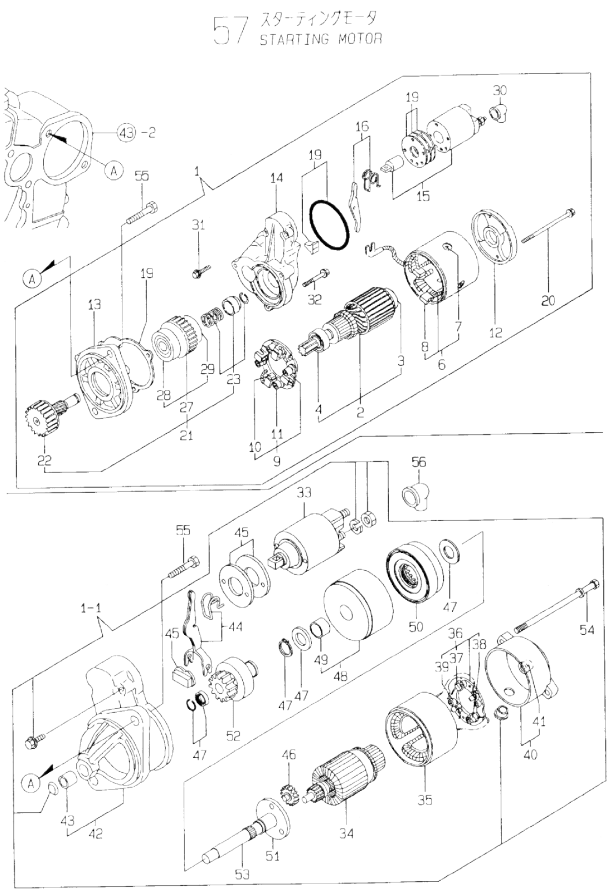

(A)=3TNE84-GH (D)=
(B)= (E)=
(C)= (F)=

No.	Lev.	Parts No.	Description	Q'ty (A)	(B)	(C)	(D)	(E)	(F)	I	R
32	2	26106-060402	BOLT, M6X 40 PLATED	3						Z	
	(A=E19035)										
33	2	124298-77020	SWITCH, MAGNETIC	1						W	
	(A=E19035)										
34	2	129698-77100	ARMATURE ASSY	1						W	
	(A=E19035)										
35	2	129698-77110	YOKE ASSY	1						W	
	(A=E19035)										
36	2	129698-77120	HOLDER ASSY, BRUSH	1						W	
	(A=E19035)										
37	3	129698-77140	BRUSH SET	1						W	
	(A=E19035)										
38	3	129698-77130	BRUSH	2						W	
	(A=E19035)										
39	3	129698-77150	SPRING, BRUSH	4						W	
	(A=E19035)										
40	2	129698-77160	COVER ASSY	1						W	
	(A=E19035)										
41	3	129698-77170	BEARING	1						W	
	(A=E19035)										
42	2	129698-77260	CASE ASSY	1						W	
	(A=E19035)										
43	3	X2114535200	METAL, STARTER	1						W	
	(A=E19035)										
44	2	129698-77270	LEVER SET, SHIFT	1						W	
	(A=E19035)										
45	2	129698-77280	COVER KIT	1						W	
	(A=E19035)										
46	2	129698-77240	GEAR	3						W	
	(A=E19035)										
47	2	129698-77250	WASHER SET	1						W	
	(A=E19035)										
48	2	129698-77180	BRACKET	1						W	
	(A=E19035)										
49	3	129698-77190	BRACKET	1						W	
	(A=E19035)										
50	2	129698-77200	GEAR, INTERNAL	1						W	
	(A=E19035)										
51	2	129698-77210	BRACKET	1						W	
	(A=E19035)										
52	2	129698-77220	PINION ASSY	1						W	
	(A=E19035)										
53	2	129698-77230	SHAFT	1						W	
	(A=E19035)										
54	2	124195-77770	BOLT, THROUGH	2						W	
	(A=E19035)										
55	1	26116-120252	BOLT, M12X 25 PLATED	2							
56	1	124550-77030	COVER, TERMINAL	1							

N:Old ←Yes/No→ New. Q:Old ←No/Yes→ New. R:Old ←Yes/Yes→ New. S:Old ←No/No→ New. W:Add. Z:Discontinued. F:Interchangeable by set. K:Q'ty Change

Copyright (C) YANMAR CO., LTD. All RightsReserved.

Fig.58. TENSION PULLEY

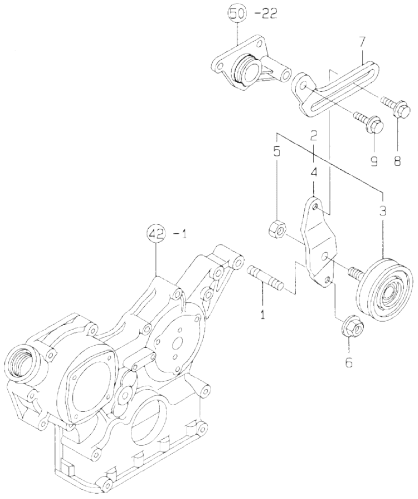

(A)=3TNE84-GH (D)=
(B)= (E)=
(C)= (F)=

No.	Lev.	Parts No.	Description	Q'ty (A)	(B)	(C)	(D)	(E)	(F)	I	R
1	1	121450-01570	STUD	1							
2	1	171375-44300	PULLEY ASSY, TENSION	1							
3	2	171011-44301	PULLEY, TENSION	1							
4	2	171375-44320	BRACKET, PULLEY	1							
5	2	26706-100002	NUT, M10	1							
6	1	26366-100002	NUT, M10	1							
7	1	129400-77330	ADJUSTER	1							
8	1	26014-080252	BOLT, M8X 25	1							
9	1	26106-080502	BOLT, M8X 50 PLATED	1							

N:Old ←Yes/No→ New. Q:Old ←No/Yes→ New. R:Old ←Yes/Yes→ New. S:Old ←No/No→ New. W:Add. Z:Discontinued. F:Interchangeable by set. K:Q'ty Change

Copyright (C) YANMAR CO., LTD. All RightsReserved.

Fig.59. ELECTRIC PARTS

(A)=3TNE84-GH
(B)=
(C)=
(D)=
(E)=
(F)=

No.	Lev.	Parts No.	Description	Q'ty (A)	(B)	(C)	(D)	(E)	(F)	I	R
1	1	171010-77850	THERMOSTAT	2							
2	1	171090-91010	GAUGE	1							
3	1	171014-91101	TACHOMETER	1							
4	1	121400-91251	SWITCH, STARTER	1							
5	2	121400-91271	KEY, SWITCH	1							
6	1	121400-91140	SHAFT	1							

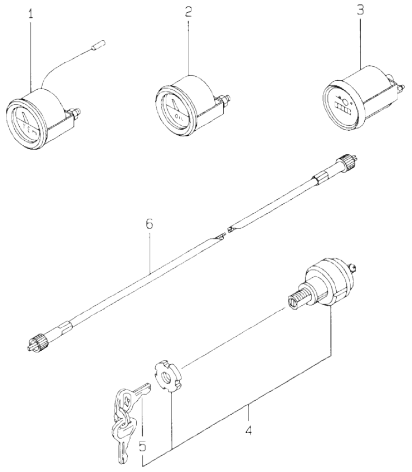

N:Old ◄Yes/No► New. Q:Old ◄No/Yes► New. R:Old ◄Yes/Yes► New. S:Old ◄No/No► New. W:Add. Z:Discontinued. F:Interchangeable by set. K:Q'ty Change

Copyright (C) YANMAR CO., LTD. All RightsReserved.

Fig.60. GASKET SET

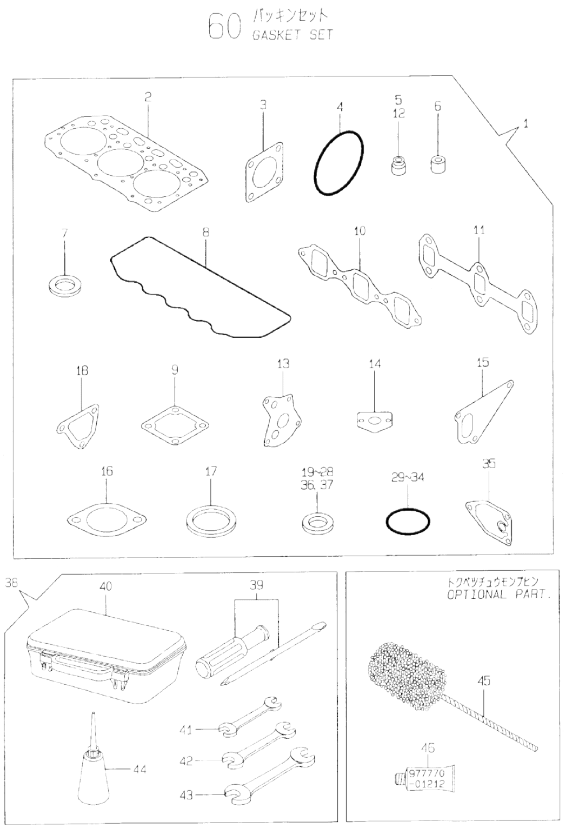

Remarks
(1) OPTIONAL PART.

(A)=3TNE84-GH (D)=
(B)= (E)=
(C)= (F)=

No.	Lev.	Parts No.	Description	Q'ty (A)	(B)	(C)	(D)	(E)	(F)	I	R
1	1	729002-92680	GASKET SET	1							1
2	2	129002-01331	GASKET, HEAD	1							
3	2	124240-01883	GASKET	1							
4	2	121850-51960	O-RING	1							
5	2	124460-11340	SEAL, VALVE STEM	3							
6	2	119625-11871	PROTECTOR, NOZZLE	3							
7	2	119625-11880	SEAT, NOZZLE	3							
8	2	129150-11310	GASKET, BONNET	1							
9	2	129150-77511	GASKET	1							
10	2	129150-12111	GASKET, MANIFOLD	1							
11	2	129150-13110	GASKET	1							
12	2	121400-11340	SEAL, VALVE STEM	3							
13	2	129150-32020	GASKET, PUMP	1							
14	2	129150-35041	GASKET	1							
15	2	129100-42020	GASKET, WATER PUMP	1							
16	2	129795-49551	GASKET	1							
17	2	129150-49811	GASKET, THERMOSTAT	1							
18	2	129100-49840	GASKET	1							
19	2	22190-080002	WASHER, SEAL 6	5							
20	2	23414-080012	GASKET, 8X1.0	6							
21	2	23414-060000	GASKET, 6X1.0	6							
22	2	23414-140000	GASKET, 14X1.0	2							
23	2	23414-080000	GASKET, 8X1.0	2							
24	2	23414-100000	GASKET, 10X1.0	2							
25	2	23414-120000	GASKET, 12X1.0	10							
26	2	23414-170000	GASKET, 17X1.0	1							
27	2	124465-44950	GASKET, 16	2							
27-1	2	124465-44950	GASKET, 16	1						K	
	(A=E16528)										
28	2	129150-49360	GASKET	1							
28-1	2	129150-49360	GASKET	2						K	
	(A=E16528)										
29	2	24311-000120	O-RING, 1AP12.0	3							
30	2	24311-000160	O-RING, 1AP16.0	3							
31	2	24311-000320	O-RING, 1AP32.0	2							
32	2	24341-000240	O-RING, 1AS24.0	1							
33	2	24341-000500	O-RING, 1AS50.0	1							
34	2	24321-000300	O-RING, 1AG30.0	1							
35	2	129150-35111	GASKET	1							
36	2	124450-11900	GASKET	1							
37	2	104200-59170	GASKET, 12	2							
38	1	721400-92102	BOX ASSY, TOOL	1							
39	2	104200-92350	DRIVER, SCREW	1							
40	2	104200-92600	BOX, TOOL	1							
41	2	28110-100120	SPANNER, 10X12	1							
42	2	28110-140170	SPANNER, 14X17	1							
43	2	28110-190220	SPANNER, 19X22	1							
44	2	28210-000140	OILER	1							
45	1	129400-92420	HONE	1							1
46	1	977770-01212	GASKET, LIQUID	1							1

N:Old ←Yes/No→ New. Q:Old ←No/Yes→ New. R:Old ←Yes/Yes→ New. S:Old ←No/No→ New. W:Add. Z:Discontinued. F:Interchangeable by set. K:Q'ty Change

Copyright (C) YANMAR CO., LTD. All RightsReserved.

Fig.61. CYLINDER BLOCK

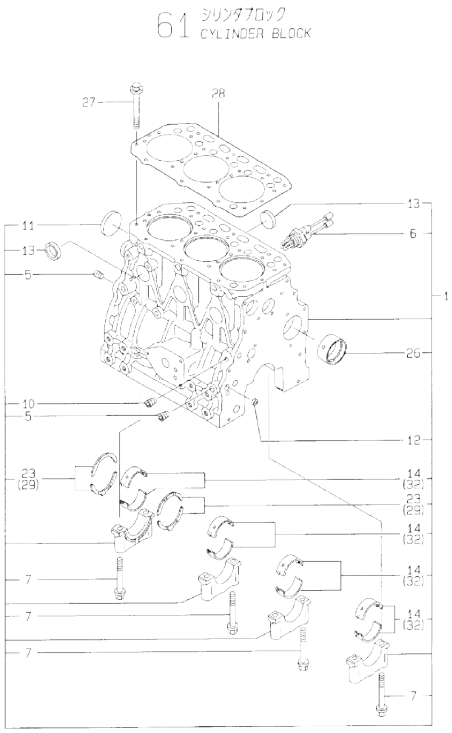

(A)=3TNE84T-GH
(B)=
(C)=
(D)=
(E)=
(F)=

No.	Lev.	Parts No.	Description	Q'ty (A)	(B)	(C)	(D)	(E)	(F)	I	R
1	1	729215-01560	BLOCK ASSY, CYLINDER	1							
5	2	124160-01910	PLUG, PT1/4	3							
6	2	46150-504600	HEATER	1							
6-1	2	124097-77900	HEATER,COOLING WATER	1						N	
	(A=E64530)										
7	2	129150-02020	BOLT, METAL CAP	8							
10	2	23871-010000	PLUG, R01	1							
11	2	27231-500000	PLUG 50	1							
12	2	27241-120000	PLUG, 12	2							
13	2	27241-300000	PLUG 30	6							
14	2	129001-02800	BEARING, MAIN	4							
23	2	129150-02930	BEARING, THRUST	2							
26	2	129795-02411	BUSH, CAMSHAFT	1							
27	1	129150-01200	BOLT, HEAD	14							
28	1	129002-01331	GASKET, HEAD	1							
29	1	129150-02940	BEARING, THRUST 0.25	2							1
32	1	129150-02870	BEARING, 0.25 US	4							2

Remarks
(1) OVER-SIZE(O.S=0.25)PART.
(2) UNDER-SIZE(U.S=0.25)PART.

N:Old ←Yes/No→ New. Q:Old ←No/Yes→ New. R:Old ←Yes/Yes→ New. S:Old ←No/No→ New. W:Add. Z:Discontinued. F:Interchangeable by set. K:Q'ty Change

Copyright (C) YANMAR CO., LTD. All RightsReserved.

Fig.62. GEAR HOUSING

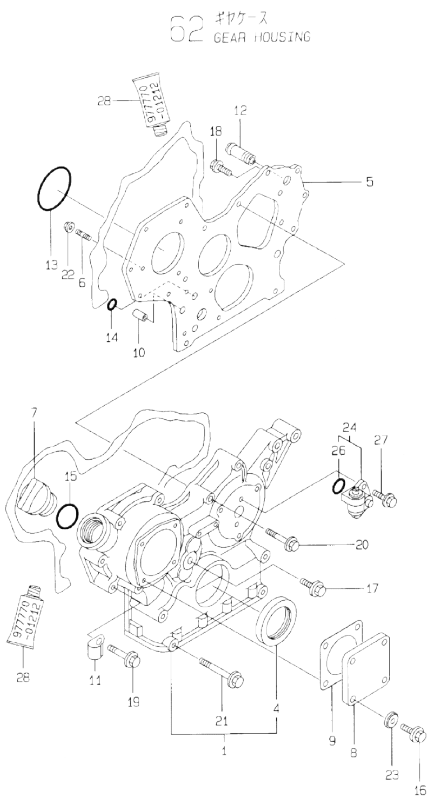

(A)=3TNE84T-GH
(B)=
(C)=
(D)=
(E)=
(F)=

No.	Lev.	Parts No.	Description	Q'ty (A)	(B)	(C)	(D)	(E)	(F)	I	R
1	1	719810-01500	CASE ASSY, GEAR	1							
4	2	129795-01800	SEAL, OIL	1							
5	1	129103-01530	FLANGE, GEAR CASE	1							
6	1	121450-01560	STUD, M8X22	3							
7	1	124160-01751	COVER, FILLER	1							
8	1	124240-01871	COVER	1							
9	1	124240-01883	GASKET	1							
10	1	129795-01950	PIPE, KNOCK L=18	2							
11	1	129150-03100	RETAINER, PIPE	1							
12	1	129122-44480	JOINT	1							
13	1	121850-51960	O-RING	1							
14	1	24311-000160	O-RING, 1AP16.0	2							
15	1	24311-000320	O-RING, 1AP32.0	1							
16	1	26106-080122	BOLT, M8X 12 PLATED	4							
17	1	26106-080162	BOLT, M8X 16 PLATED	1							
18	1	26106-080202	BOLT, M8X 20 PLATED	2							
19	1	26106-080452	BOLT, M8X 45 PLATED	6							
20	1	26106-080552	BOLT, M8X 55 PLATED	3							
21	1	26106-080852	BOLT, M8X 85 PLATED	4							
22	1	26366-080002	NUT, M8	3							
23	1	22190-080002	WASHER, SEAL 6	4							
24	1	129150-91400	GEAR	1							
26	2	24341-000240	O-RING, 1AS24.0	1							
27	1	26106-060162	BOLT, M6X 16 PLATED	2							
28	1	977770-01212	GASKET, LIQUID	1							1

Remarks
(1) OPTIONAL PART.

N:Old ←Yes/No→ New. Q:Old ←No/Yes→ New. R:Old ←Yes/Yes→ New. S:Old ←No/No→ New. W:Add. Z:Discontinued. F:Interchangeable by set. K:Q'ty Change

Copyright (C) YANMAR CO., LTD. All RightsReserved.

Fig.63. FLYWHEEL HOUSING &LUB.OIL SUMP

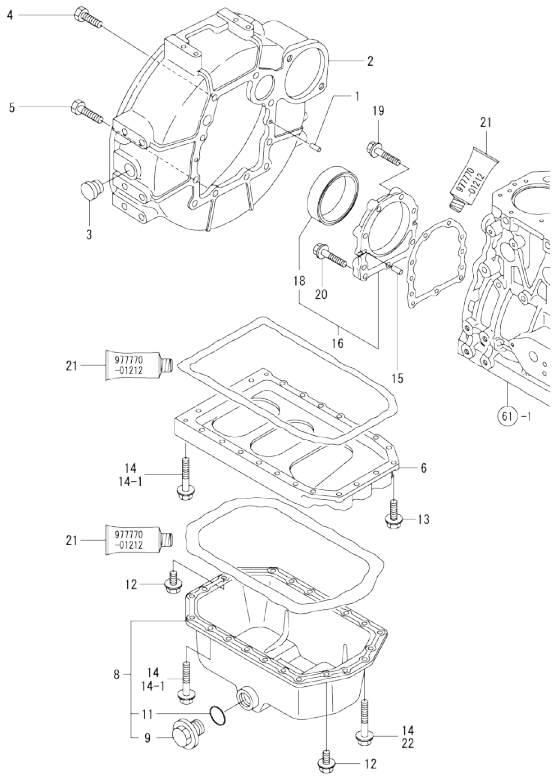

(A)=3TNE84T-GH (D)=
(B)= (E)=
(C)= (F)=

No.	Lev.	Parts No.	Description	Q'ty (A)	(B)	(C)	(D)	(E)	(F)	I	R
1	1	129100-01580	PIN, M8X16	2							
2	1	171301-01600	HOUSING, FLYWHEEL	1							
3	1	119620-01750	CAP	1							
4	1	26206-100252	BOLT, M10X 25 PLATED	6							
5	1	26206-100302	BOLT, M10X 30 PLATED	4							
6	1	129100-01730	SPACER, OIL SUMP	1							
8	1	129100-01760	SUMP ASSY, OIL	1							
9	2	171301-01640	PLUG, 22	1							
11	2	24341-000250	O-RING, 1AS25.0	1							
12	1	26106-080162	BOLT, M8X 16 PLATED	4							
13	1	26106-080252	BOLT, M8X 25 PLATED	2							
14	1	26106-080452	BOLT, M8X 45 PLATED	20							
14-1	1	26106-080452	BOLT, M8X 45 PLATED	16						K	
	(A=FROM 1ST)										
15	1	129100-01580	PIN, M8X16	2							
16	1	129100-01640	CASE ASSY, OIL SEAL	1							
18	2	129795-01780	SEAL, OIL	1							
19	1	26106-080302	BOLT, M8X 30 PLATED	6							
19-1	1	129486-01670	BOLT, M8X30	6						R	
	(A=E14830)										
20	1	26106-080352	BOLT, M8X 35 PLATED	3							
21	1	977770-01212	GASKET, LIQUID	1							1
22	1	26106-080502	BOLT, M8X 50 PLATED	4						W	
	(A=FROM 1ST)										

Remarks
(1) OPTIONAL PART.

N:Old ←Yes/No→ New. Q:Old ←No/Yes→ New. R:Old ←Yes/Yes→ New. S:Old ←No/No→ New. W:Add. Z:Discontinued. F:Interchangeable by set. K:Q'ty Change

Copyright (C) YANMAR CO., LTD. All RightsReserved.

Fig.64. CYLINDER HEAD & BONNET

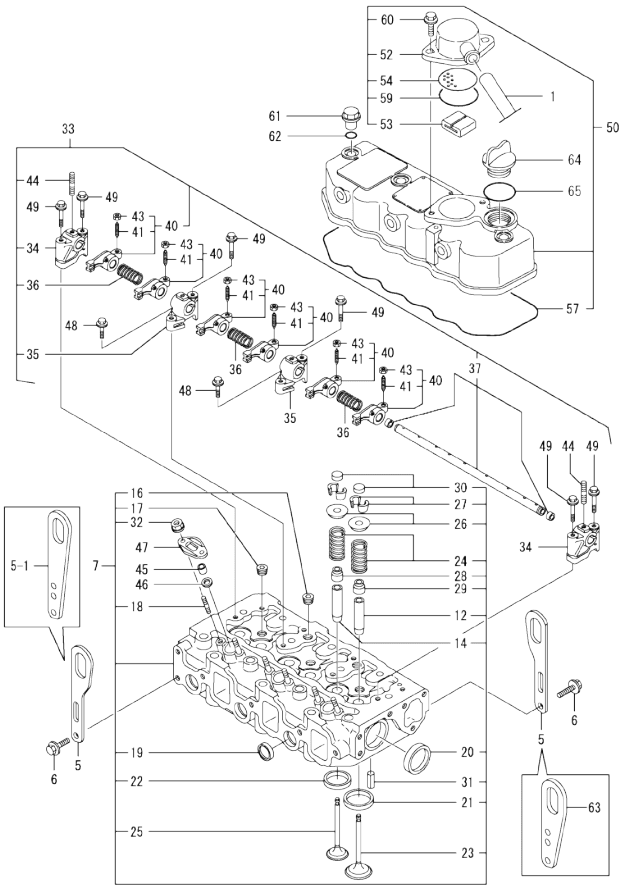

Remarks
(1) REPAIR PART.

(A)=3TNE84T-GH
(B)=
(C)=
(D)=
(E)=
(F)=

No.	Lev.	Parts No.	Description	Q'ty (A)	(B)	(C)	(D)	(E)	(F)	I	R
1	1	129150-03090	HOSE, ID16X2T	1							
5	1	124736-07900	LIFTER	2							
5-1	1	129900-07900	LIFTER	1						N	
	(A=*2009.08)										
6	1	26106-080142	BOLT, M8X 14 PLATED	4							
7	1	729202-11710	HEAD ASSY, CYLINDER	1							
12	2	120130-11860	GUIDE, VALVE	3							1
14	2	129150-11810	GUIDE, VALVE	3							1
16	2	23871-020000	PLUG, R02	2							
17	2	23871-030000	PLUG, R03	3							
18	2	26216-060202	STUD, M6X 20	6							
19	2	27241-220000	PLUG, 22	3							
20	2	27241-400000	PLUG, 40	2							
21	2	129470-11080	SEAT, INTAKE VALVE	3							
22	2	129470-11090	SEAT, EXHAUST VALVE	3							
23	2	129100-11100	VALVE, INTAKE	3							
24	2	129795-11120	SPRING, VALVE	6							
25	2	129100-11130	VALVE, EXHAUST	3							
26	2	129795-11180	RETAINER, SPRING	6							
27	2	27310-080001	COTTER, 8	6							
28	2	121400-11340	SEAL, VALVE STEM	3							
29	2	124460-11340	SEAL, VALVE STEM	3							
30	2	129150-11370	CAP, VALVE	6							
31	2	22351-060012	PIN, SPRING 6.0X12	2							
32	2	26366-060002	NUT, M6	6							
33	1	129155-11241	SHAFT ASSY, ROCKER	1							
34	2	129155-11260	SUPPORT, ROCKER ARM	2							
35	2	129155-11270	SUPPORT, ROCKER ARM	2							
36	2	129150-11280	SPRING	3							
37	2	129150-11290	SHAFT, ROCKER ARM	1							
40	2	729402-11650	ARM ASSY, ROCKER	6							
41	3	129150-11230	SCREW, VALVE ADJUST	6							
43	3	129150-11750	NUT, M8	6							
44	2	26226-080182	STUD, M8X 18	3							
45	1	119625-11871	PROTECTOR, NOZZLE	3							
46	1	119625-11880	SEAT, NOZZLE	3							
47	1	119625-11900	RETAINER, NOZZLE	3							
48	1	26106-080252	BOLT, M8X 25 PLATED	2							
49	1	26106-080502	BOLT, M8X 50 PLATED	6							
50	1	129100-11350	BONNET ASSY, HEAD	1							
52	2	129150-03020	COVER, BREATHER	1							
53	2	129150-03070	BAFFLE, BREATHER	1							
54	2	129150-03080	PLATE, BAFFLE	1							
57	2	129150-11310	GASKET, BONNET	1							
59	2	24341-000500	O-RING, 1AS50.0	1							
60	2	26106-080162	BOLT, M8X 16 PLATED	2							
61	1	124160-11360	KNOB	3							
62	1	24311-000120	O-RING, 1AP12.0	3							
63	1	119226-07900	LIFTER	1						W	
	(A=*2009.08)										
64	1	124160-01751	COVER, FILLER	1							

N:Old ←Yes/No→ New. Q:Old ←No/Yes→ New. R:Old ←Yes/Yes→ New. S:Old ←No/No→ New. W:Add. Z:Discontinued. F:Interchangeable by set. K:Q'ty Change

++ CONTINUE ++

Copyright (C) YANMAR CO., LTD. All RightsReserved.

Fig.64. CYLINDER HEAD & BONNET

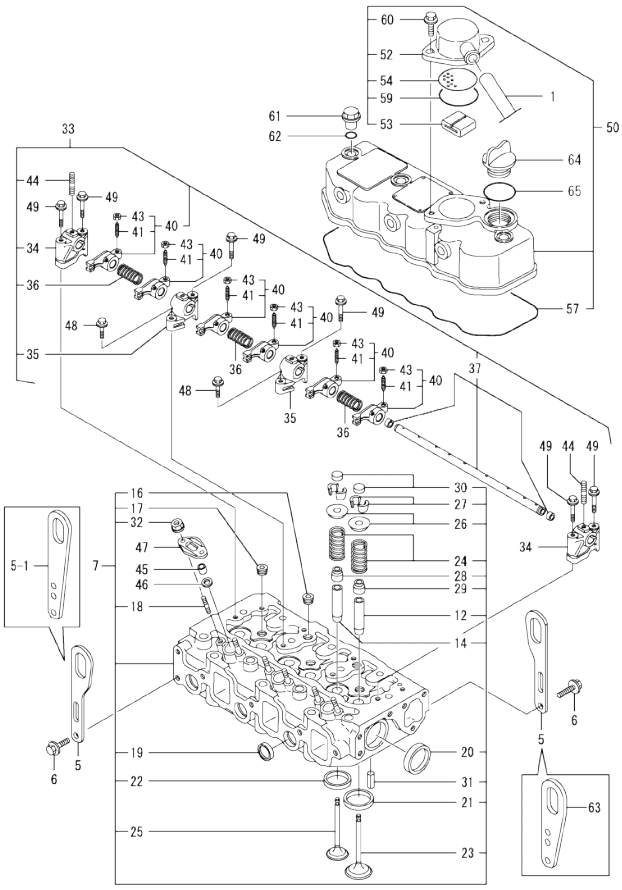

(A)=3TNE84T-GH (D)=
(B)= (E)=
(C)= (F)=

No.	Lev.	Parts No.	Description	Q'ty (A)	(B)	(C)	(D)	(E)	(F)	I	R
65	1	24311-000320	O-RING, 1AP32.0	1							

Remarks
(1) REPAIR PART.

N:Old ←Yes/No→ New. Q:Old ←No/Yes→ New. R:Old ←Yes/Yes→ New. S:Old ←No/No→ New. W:Add. Z:Discontinued. F:Interchangeable by set. K:Q'ty Change

Copyright (C) YANMAR CO., LTD. All RightsReserved.

Fig.65. SUCTION MANIFOLD

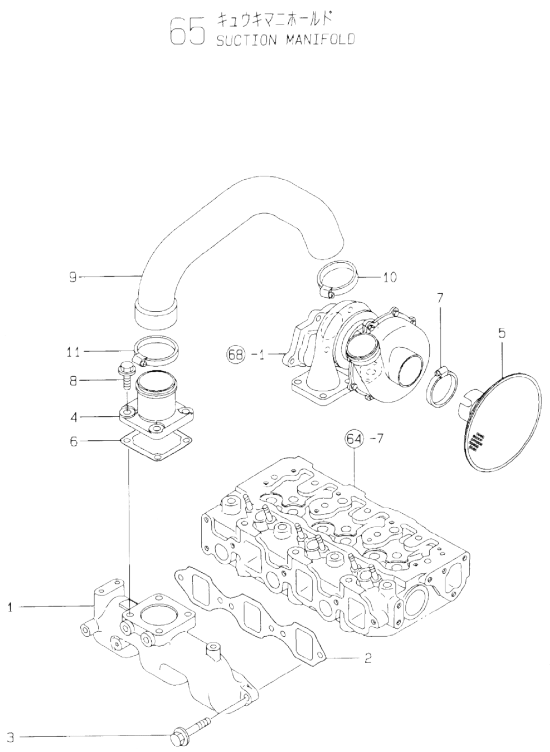

(A)=3TNE84T-GH (D)=
(B)= (E)=
(C)= (F)=

No.	Lev.	Parts No.	Description	Q'ty (A)	(B)	(C)	(D)	(E)	(F)	I	R
1	1	129150-12100	MANIFOLD, AIR INTAKE	1							
2	1	129150-12111	GASKET, MANIFOLD	1							
3	1	26106-080252	BOLT, M8X 25 PLATED	4							
4	1	171463-12581	JOINT, MANIFOLD	1							
5	1	129412-12460	COVER	1							
6	1	129150-77511	GASKET	1							
7	1	23000-054000	CLAMP, 54	1							
8	1	26106-080352	BOLT, M8X 35 PLATED	4							
9	1	129103-12080	PIPE, AIR INTAKE	1							
10	1	23000-054000	CLAMP, 54	1							
11	1	23000-070000	CLAMP, 70	1							

N:Old ←Yes/No→ New. Q:Old ←No/Yes→ New, R:Old ←Yes/Yes→ New, S:Old ←No/No→ New, W:Add, Z:Discontinued, F:Interchangeable by set, K:Q'ty Change

Copyright (C) YANMAR CO., LTD. All RightsReserved.

Fig.66. EXHAUST MANIFOLD

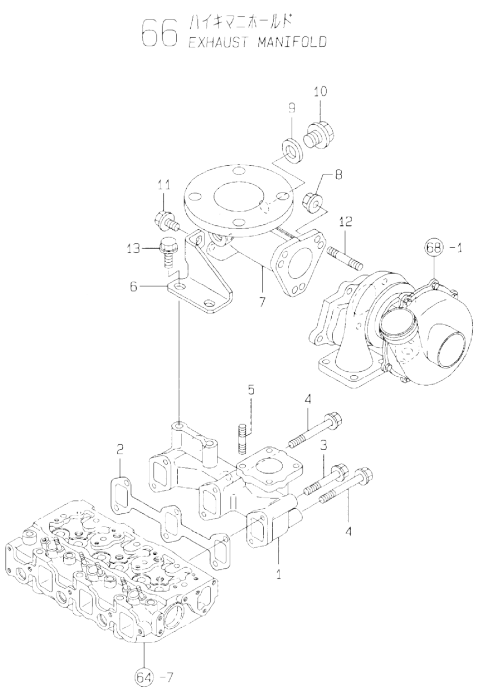

(A)=3TNE84T-GH
(B)=
(C)=
(D)=
(E)=
(F)=

No.	Lev.	Parts No.	Description	Q'ty (A)	(B)	(C)	(D)	(E)	(F)	I	R
1	1	129103-13110	MANIFOLD, EXHAUST	1							
2	1	129150-13110	GASKET	1							
3	1	26106-080502	BOLT, M8X 50 PLATED	2							
4	1	26106-080602	BOLT, M8X 60 PLATED	4							
5	1	26216-080222	STUD, M8X 22	4							
6	1	129215-18290	SUPPORT	1							
7	1	129412-18391	BEND, EXHAUST	1							
8	1	194990-22050	NUT, M8	3							
9	1	23414-170000	GASKET, 17X1.0	2							
10	1	23894-030002	PLUG, G3/8	2							
11	1	26106-080142	BOLT, M8X 14 PLATED	1							
12	1	26216-080222	STUD, M8X 22	3							
13	1	26106-100162	BOLT, M10X 16 PLATED	2							

N:Old ◄Yes/No► New. Q:Old ◄No/Yes► New. R:Old ◄Yes/Yes► New. S:Old ◄No/No► New. W:Add. Z:Discontinued. F:Interchangeable by set. K:Q'ty Change

Copyright (C) YANMAR CO., LTD. All RightsReserved.

Fig.67. CAMSHAFT & DRIVING GEAR

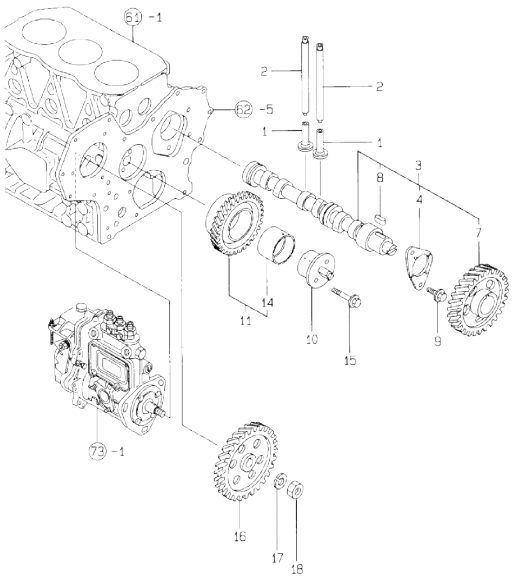

(A)=3TNE84T-GH (D)=
(B)= (E)=
(C)= (F)=

No.	Lev.	Parts No.	Description	Q'ty (A)	(B)	(C)	(D)	(E)	(F)	I	R
1	1	129150-14200	TAPPET	6							
2	1	129150-14400	ROD, PUSH L=178	6							
3	1	129129-14580	CAMSHAFT ASSY	1							
4	2	129150-02450	BEARING, THRUST	1							
7	2	129150-14101	GEAR, CAMSHAFT	1							
8	2	22512-070140	KEY, 7X 14	1							
9	1	26106-080162	BOLT, M8X 16 PLATED	2							
9-1	1 (A=E14476)	26106-080142	BOLT, M8X 14 PLATED	2						N	
10	1	129100-25061	SHAFT, IDLE	1							
11	1	129150-25101	GEAR ASSY, IDLE	1							
14	2	129150-25920	BUSH, IDLE GEAR	1							1
15	1	26106-080452	BOLT, M8X 45 PLATED	2							
16	1	129150-25900	GEAR, PUMP	1							
17	1	22217-120000	WASHER, SPRING 12	1							
18	1	26716-120002	NUT, M12	1							

Remarks
(1) REPAIR PART.

N:Old ←Yes/No→ New. Q:Old ←No/Yes→ New. R:Old ←Yes/Yes→ New. S:Old ←No/No→ New. W:Add. Z:Discontinued. F:Interchangeable by set. K:Q'ty Change

Copyright (C) YANMAR CO., LTD. All RightsReserved.

Fig.68. TURBINE

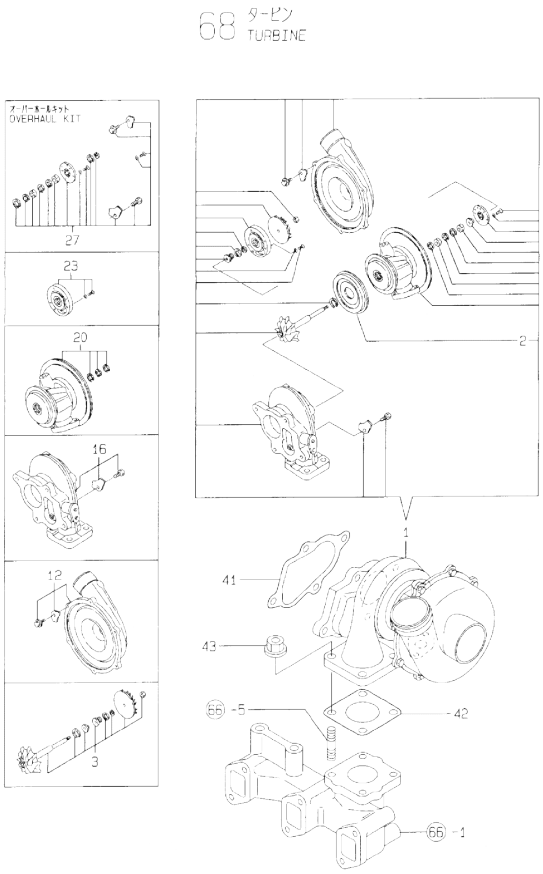

(A)=3TNE84T-GH (D)=
(B)= (E)=
(C)= (F)=

No.	Lev.	Parts No.	Description	Q'ty (A)	(B)	(C)	(D)	(E)	(F)	I	R
1	1	129103-18020	TURBINE	1							
2	2	129404-18720	PROTECTOR, HEAT	1							
3	2	129488-18770	ROTOR ASSY, TURBO	1							
12	2	129488-18780	HOUSING ASSY	1							
16	2	129488-18790	HOUSING ASSY	1							
20	2	129404-18800	HOUSING SET	1							
23	2	129404-18820	PLATE	1							
27	2	129404-18830	OVERHAUL KIT	1							
41	1	129412-18080	GASKET	1							
42	1	129417-18100	GASKET	1							
43	1	194990-22050	NUT, M8	4							

N:Old ◄Yes/No► New. Q:Old ◄No/Yes► New, R:Old ◄Yes/Yes► New, S:Old ◄No/No► New, W:Add, Z:Discontinued, F:Interchangeable by set, K:Q'ty Change

Copyright (C) YANMAR CO., LTD. All RightsReserved.

Fig.69. CRANKSHAFT & PISTON

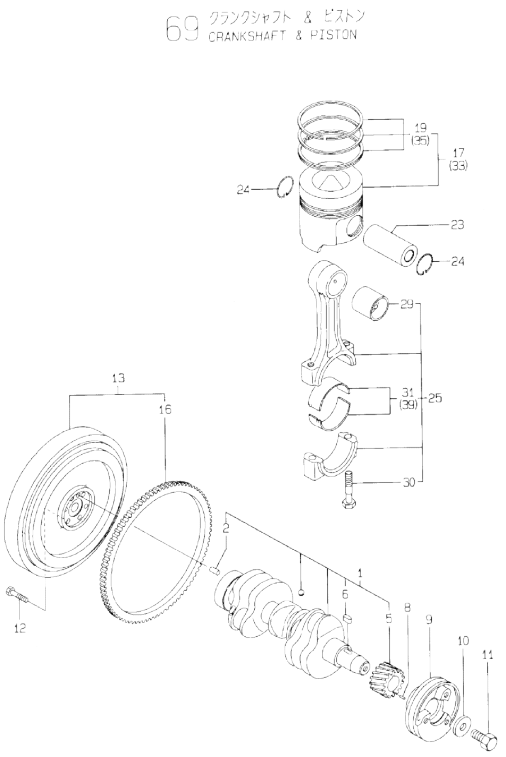

Remarks
(1) REPAIR PART.
(2) OVER-SIZE(O.S=0.25)PART.
(3) UNDER-SIZE(U.S=0.25)PART.

(A)=3TNE84T-GH
(B)=
(C)=
(D)=
(E)=
(F)=

No.	Lev.	Parts No.	Description	Q'ty (A)	(B)	(C)	(D)	(E)	(F)	I	R
1	1	129001-21000	CRANKSHAFT ASSY	1							
2	2	129100-01580	PIN, M8X16	1							
5	2	129150-21200	GEAR, CRANKSHAFT	1							
6	2	22512-070140	KEY, 7X 14	1							
8	1	22351-040010	PIN, SPRING 4.0X10	1							
9	1	171340-21650	V-PULLEY	1							
10	1	129795-21661	WASHER	1							
11	1	121850-21680	BOLT	1							
12	1	121111-21501	BOLT, FLYWHEEL	6							
13	1	171340-21580	FLYWHEEL ASSY	1							
16	2	119865-21600	GEAR, RING	1							
17	1	129002-22090	PISTON ASSY	3							
19	2	129002-22510	RING SET, PISTON	3							
23	1	129202-22300	PIN, PISTON D26 L70	3							
24	1	22252-000260	RING, 26	6							
25	1	729402-23100	ROD ASSY, CONNECTING	3							
29	2	129100-23910	BEARING, PISTON PIN	3							1
30	2	121550-23200	BOLT, CONNECTING ROD	6							
31	2	129150-23600	BEARING, CRANK PIN	3							
33	1	129002-22900	PISTON ASSY, 0.25 OS	3							2
35	2	129002-22950	RING SET, 0.25 OS	3							2
39	1	129150-23610	BEARING, 0.25 US	3							3

N:Old ←Yes/No→ New. Q:Old ←No/Yes→ New, R:Old ←Yes/Yes→ New, S:Old ←No/No→ New, W:Add, Z:Discontinued, F:Interchangeable by set, K:Q'ty Change

Copyright (C) YANMAR CO., LTD. All RightsReserved.

Fig.70. LUB.OIL SYSTEM

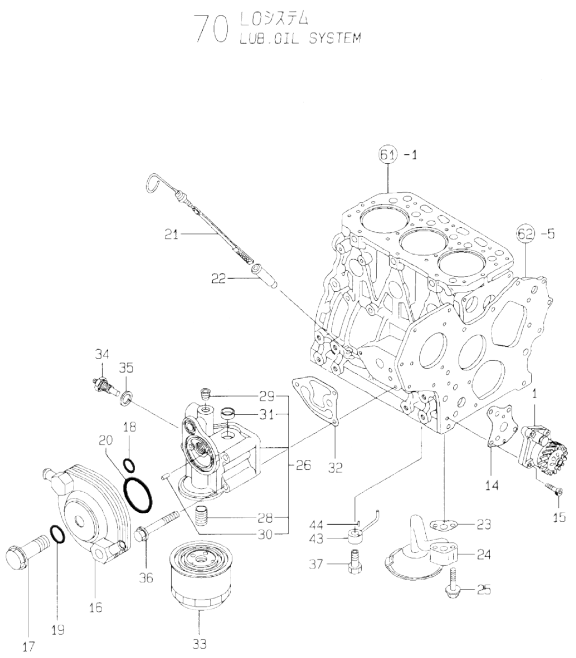

(A)=3TNE84T-GH
(B)=
(C)=
(D)=
(E)=
(F)=

No.	Lev.	Parts No.	Description	Q'ty (A)	(B)	(C)	(D)	(E)	(F)	I	R
1	1	129418-32000	PUMP ASSY, OIL	1							
14	1	129150-32020	GASKET, PUMP	1							
15	1	26450-060252	BOLT, M6X 25	4							
16	1	129103-33031	COOLER, OIL	1							
17	1	129103-33132	BOLT	1							
18	1	24311-000200	O-RING, 1AP20.0	1							
19	1	24311-000210	O-RING, 1AP21.0	1							
20	1	24321-000550	O-RING, 1AG55.0	1							
21	1	129430-34800	DIPSTICK, OIL	1							
22	1	121520-34810	GUIDE, DIPSTICK	1							
23	1	129150-35041	GASKET	1							
24	1	129100-35301	PIPE ASSY, OIL INLET	1							
25	1	26106-080352	BOLT, M8X 35 PLATED	2							
26	1	129412-35102	BRACKET ASSY	1							
28	2	129100-35140	STUD	1							
29	2	23871-020000	PLUG, R02	1							
30	2	22312-060080	PIN, PARALLEL M6X 8	2							
31	2	27241-200000	PLUG, 20	1							
32	1	129103-35122	GASKET	1							
33	1	129150-35151	FILTER, D80XL80	1							
34	1	124250-49351	SENSOR	1							
35	1	129150-49360	GASKET	1							
36	1	26106-080752	BOLT, M8X 75 PLATED	3							
37	1	129792-39410	VALVE ASSY, CHECK	3							
43	1	129553-39650	NOZZLE	3							
44	1	22351-030010	PIN, SPRING 3.0X10	3							

N:Old ←Yes/No→ New. Q:Old ←No/Yes→ New. R:Old ←Yes/Yes→ New. S:Old ←No/No→ New. W:Add. Z:Discontinued. F:Interchangeable by set. K:Q'ty Change

Copyright (C) YANMAR CO., LTD. All RightsReserved.

Fig.71. LUB.OIL LINE

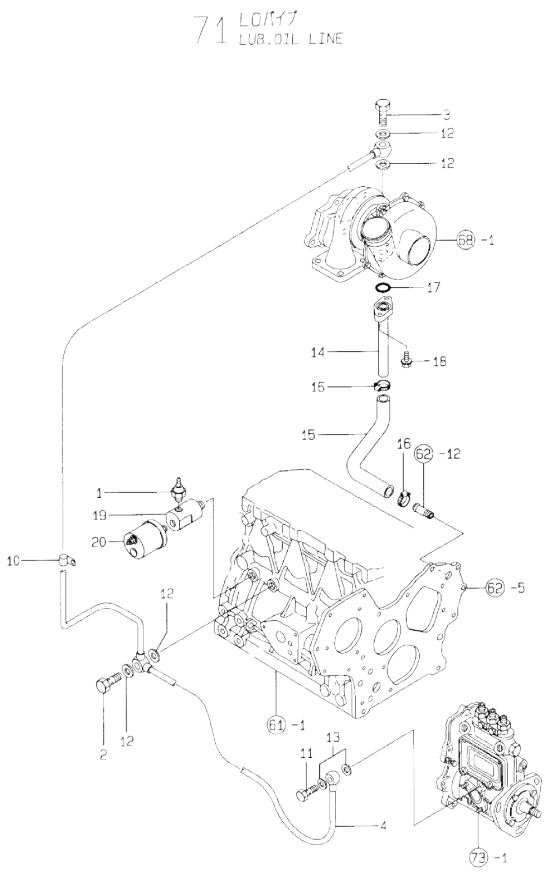

(A)=3TNE84T-GH
(B)=
(C)=
(D)=
(E)=
(F)=

No.	Lev.	Parts No.	Description	Q'ty (A)	(B)	(C)	(D)	(E)	(F)	I	R
1	1	124160-39450	SWITCH, 0.5KG	1							
2	1	124160-39140	BOLT, PIPE JOINT M10	1							
3	1	121252-39150	BOLT, JOINT M10X1.5	1							
4	1	129103-39451	PIPE ASSY, OIL	1							
10	1	124223-39900	RETAINER	1							
11	1	124550-59820	BOLT, PIPE JOINT M8	1							
12	1	23414-100000	GASKET, 10X1.0	4							
13	1	22190-080002	WASHER, SEAL 6	2							
14	1	129103-39600	PIPE, OIL	1							
15	1	129103-39611	JOINT, PIPE	1							
16	1	23000-022000	CLAMP, 22	2							
17	1	24314-000160	O-RING, 4CP16.0	1							
18	1	26106-060162	BOLT, M6X 16 PLATED	2							
19	1	171375-39601	DAMPER, 1/8	1							
20	1	144626-91560	SENSOR	1							

N:Old ◄Yes/No► New. Q:Old ◄No/Yes► New. R:Old ◄Yes/Yes► New. S:Old ◄No/No► New. W:Add. Z:Discontinued. F:Interchangeable by set. K:Q'ty Change

Copyright (C) YANMAR CO., LTD. All RightsReserved.

Fig.72. COOLING WATER SYSTEM

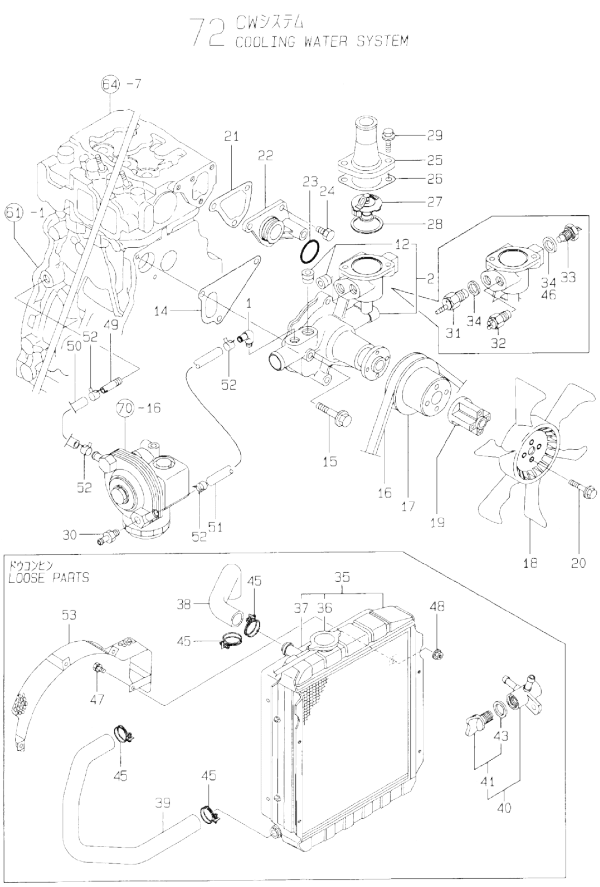

(A)=3TNE84T-GH
(B)=
(C)=
(D)=
(E)=
(F)=

No.	Lev.	Parts No.	Description	Q'ty (A)	(B)	(C)	(D)	(E)	(F)	I	R
1	1	129103-49301	ELBOW, PT1/4	1							
2	1	129001-42002	PUMP ASSY, WATER	1							
12	2	23871-030000	PLUG, R03	2							
14	1	129100-42020	GASKET, WATER PUMP	1							
15	1	26106-080602	BOLT, M8X 60 PLATED	3							
16	1	25132-003800	V-BELT, A38	1							
17	1	129403-42380	V-PULLEY, D=110	1							
18	1	129432-44740	FAN, COOLING D370XEF	1							
19	1	129030-44760	SPACER, FAN L38.5	1							
20	1	26106-060502	BOLT, M6X 50 PLATED	4							
21	1	129100-49840	GASKET	1							
22	1	129001-42040	JOINT	1							
23	1	24321-000300	O-RING, 1AG30.0	1							
24	1	26106-080162	BOLT, M8X 16 PLATED	3							
25	1	129350-49560	COVER, THERMOSTAT	1							
26	1	129795-49551	GASKET	1							
27	1	129155-49800	THERMOSTAT, 71	1							
28	1	129150-49811	GASKET, THERMOSTAT	1							
29	1	26106-080202	BOLT, M8X 20 PLATED	2							
30	1	121550-49111	JOINT, PT1/4	1							
31	1	121250-44901	SWITCH, 110	1							
32	1	171375-44900	SWITCH, 15	1							
33	1	171375-44910	SENSOR	1							
34	1	124465-44950	GASKET, 16	2							
34-1	1	124465-44950	GASKET, 16	1						K	
	(A=E16575)										
35	1	171460-44500	RADIATOR	1							
36	2	124450-44590	CAP, RADIATOR	1							
37	2	171460-44560	SHROUD	1							
38	1	171420-49010	PIPE, WATER	1							
39	1	129608-49020	PIPE, WATER	1							
40	1	129150-49100	COCK ASSY, 3-WAY	1							
41	2	129150-49080	COCK, DRAIN	1							
43	3	119629-49080	GASKET	1							
45	1	23010-038000	CLAMP, 38	4							
46	1	129150-49360	GASKET	1						W	
	(A=E16575)										
47	1	26013-080142	BOLT, M8X 14	4							
48	1	26366-080002	NUT, M8	4							
49	1	129122-44480	JOINT	1							
50	1	129403-49031	PIPE, WATER	1							
51	1	129403-49050	PIPE, WATER	1							
52	1	23000-022000	CLAMP, 22	4							
53	1	129411-44560	PROTECTOR, FAN	1							

N:Old ←Yes/No→ New. Q:Old ←No/Yes→ New. R:Old ←Yes/Yes→ New. S:Old ←No/No→ New. W:Add. Z:Discontinued. F:Interchangeable by set. K:Q'ty Change

Copyright (C) YANMAR CO., LTD. All RightsReserved.

Fig.73. FUEL INJECTION PUMP

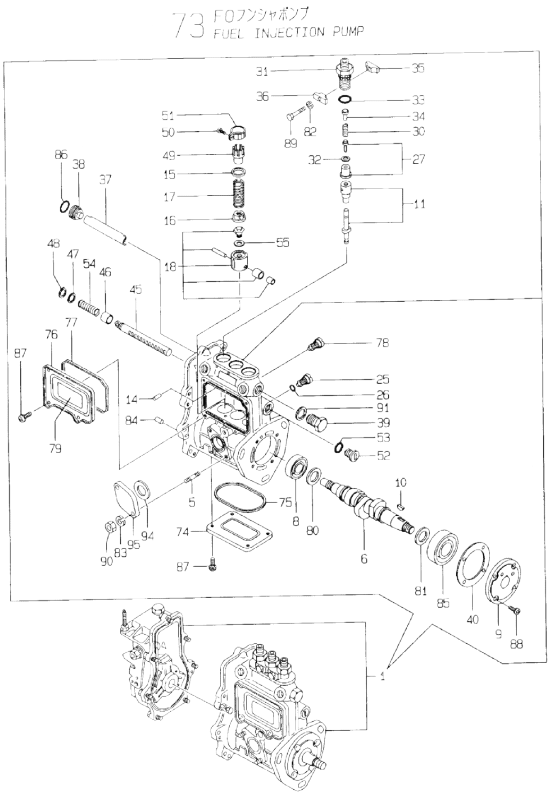

(A)=3TNE84T-GH
(B)=
(C)=
(D)=
(E)=
(F)=

No.	Lev.	Parts No.	Description	Q'ty (A)	(B)	(C)	(D)	(E)	(F)	I	R
1	1	729215-51400	PUMP ASSY, INJECTION	1							1
5	2	129155-51020	STUD	2							
6	2	119810-51040	CAMSHAFT	1							
8	2	129155-51050	BEARING, 17BM001D	1							
9	2	129155-51060	SUPPORT, CAMSHAFT	1							
10	2	122710-51090	KEY	1							
11	2	129403-51200	PLUNGER ASSY	3							
14	2	129155-51140	PIN	3							
15	2	174307-51170	RETAINER, SPRING A	3							
16	2	129155-51180	RETAINER, SPRING	3							
17	2	124950-51190	SPRING, PLUNGER	3							
18	2	129155-51200	TAPPET ASSY	3							
25	2	129155-51270	STOPPER, TAPPET	3							
26	2	129155-51280	O-RING, S6	3							
27	2	105300-51300	VALVE ASSY, DELIVERY	3							
30	2	129155-51320	SPRING, DELIVERY	3							
31	2	129155-51340	RETAINER	3							
32	2	124550-51350	GASKET, DELIVERY	3							
33	2	124550-51370	O-RING	3							
34	2	129155-51370	STOPPER, VALVE	3							
35	2	129155-51380	STOPPER	2							
36	2	129155-51390	STOPPER	2							
37	2	129155-51400	DEFLECTOR	1							
38	2	129155-51410	BOLT	1							
39	2	129155-51420	PLUG, M16	1							
40	2	129155-51450	SHIM SET, ADJUSTING	1							
45	2	129155-51500	RACK, CONTROL	1							
46	2	129155-51521	BUSH, RACK	1							
47	2	129155-51530	SPACER	1							
48	2	129155-51540	CIRCLIP	1							
49	2	129155-51550	PINION, CONTROL	3							
50	2	122117-51560	SCREW	3							
51	2	174307-51560	PINION	3							
52	2	129155-51570	PLUG, M12	1							
53	2	129155-51580	O-RING	1							
54	2	129155-51591	SPRING, RACK	1							
55	2	129155-51600	SHIM SET, ADJUSTING	3							
74	2	129155-51700	COVER	1							
75	2	129155-51710	GASKET	1							
76	2	129155-51750	COVER	1							
77	2	129155-51760	GASKET	1							
78	2	129155-51790	STOOPER, RACK	1							
79	2	129156-51910	LABEL, CAUTION	1							
80	2	129155-51930	SPACER, T=3.25	1							
81	2	129155-51940	SPACER, T=1.5	1							
82	2	22217-050000	WASHER, SPRING 5	2							
83	2	22217-060000	WASHER, SPRING 6	2							
84	2	22351-050010	PIN, SPRING 5.0X10	2							
85	2	24101-063034	BEARING, BALL 6303	1							
86	2	24341-000160	O-RING, 1AS16.0	1							
87	2	26022-050102	SCREW, M5X10	8							

Remarks
(1) GOVERNOR ASSY(FIG.74) IS INCORPORATED IN THIS FOP.CMP (REF.NO.1).

N:Old ←Yes/No→ New. Q:Old ←No/Yes→ New. R:Old ←Yes/Yes→ New. S:Old ←No/No→ New. W:Add. Z:Discontinued. F:Interchangeable by set. K:Q'ty Change

++ CONTINUE ++

Copyright (C) YANMAR CO., LTD. All RightsReserved.

Fig.73. FUEL INJECTION PUMP

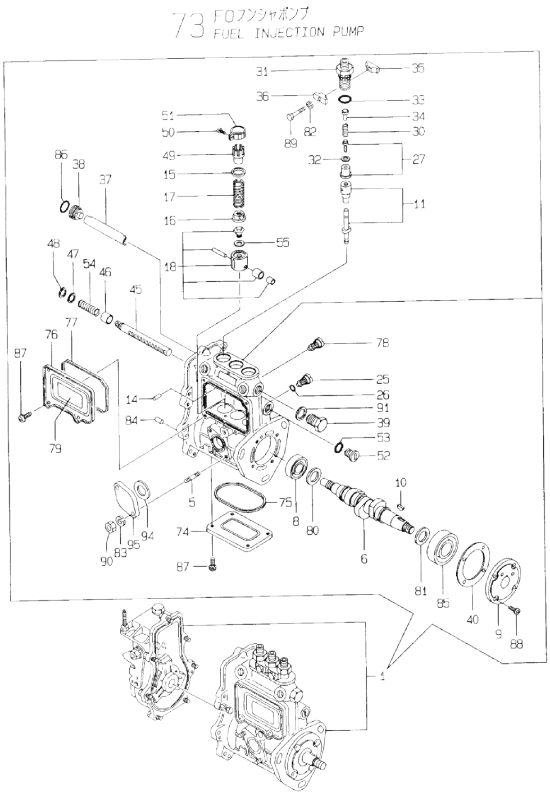

Remarks
(1) GOVERNOR ASSY(FIG.74) IS INCORPORATED IN THIS FOP.CMP (REF.NO.1).

(A)=3TNE84T-GH (D)=
(B)= (E)=
(C)= (F)=

No.	Lev.	Parts No.	Description	Q'ty (A)	(B)	(C)	(D)	(E)	(F)	I	R
88	2	26022-060162	SCREW, M6X16	4							
89	2	26116-050302	BOLT, M5X 30 PLATED	2							
90	2	26716-060002	NUT, M6	2							
91	2	22190-160002	WASHER, SEAL 16	1							
94	2	129155-52050	GASKET	1							
95	2	129100-52200	COVER	1							

N:Old ←Yes/No→ New. Q:Old ←No/Yes→ New. R:Old ←Yes/Yes→ New. S:Old ←No/No→ New. W:Add. Z:Discontinued. F:Interchangeable by set. K:Q'ty Change

Copyright (C) YANMAR CO., LTD. All RightsReserved.

Fig.74. GOVERNOR

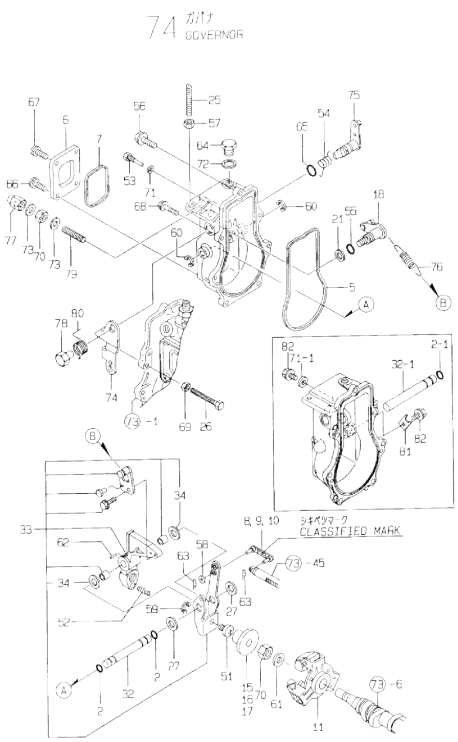

Remarks
(1) SELECTIVE PARTS;CERTAIN THE CLASSIFICATION MARK,THEN PLACE YOUR ORDER.(REF.TO.ILLUSTRATION).
(2) SELECTIVE PART.
* THIS FIGURE(GOVERNOR ASSY)IS INCORPORATED IN THE FUEL INJECTION PUMP ASSY(FIG.73).

(A)=3TNE84T-GH (D)=
(B)= (E)=
(C)= (F)=

No.	Lev.	Parts No.	Description	Q'ty (A)	(B)	(C)	(D)	(E)	(F)	I	R
2	2	129155-51280	O-RING, S6	2							
2-1	2	129155-51280	O-RING, S6	1						K	
	(A=E15636)										
5	2	129155-61050	GASKET	1							
6	2	129155-61060	COVER, GOVERNOR CASE	1							
7	2	129155-61070	GASKET	1							
8	2	129155-61120	LINK, L=30 MARK 0	1							1
9	2	129155-61130	LINK, L=31 MARK 1	1							1
10	2	129155-61140	LINK, L=30.5 MARK 05	1							1
11	2	129155-61201	WEIGHT ASSY,GOVERNOR	1							
15	2	129155-61341	SLEEVE	1							2
16	2	129155-61350	SLEEVE, L=24.9	1							2
17	2	129155-61360	SLEEVE, L=25.2	1							2
18	2	129100-61400	SHAFT ASSY	1							
21	2	129155-61430	SPACER	1							
25	2	129155-61450	BOLT, LIMITER	1							
26	2	129155-61460	BOLT, IDLE	1							
27	2	129155-61480	SPACER ASSY	2							
32	2	129155-61490	SHAFT	1							
32-1	2	129155-61380	SHAFT	1						S	
	(A=E15636)										
33	2	129100-61501	LEVER ASSY, GOVERNOR	1							
34	3	174307-51700	SHIM SET	2							
51	2	129155-61540	SHIFTER	1							
52	2	129500-61650	SPRING, FUEL CONTROL	1							
53	2	129155-61810	PIN	1							
54	2	129100-61821	SPRING, RETURN	1							
55	2	129155-61830	O-RING, S10	1							
56	2	129155-61950	BOLT	1							
57	2	124550-66370	NUT, M6	1							
58	2	22117-040000	WASHER, 4	1							
59	2	22272-000040	RING, E- 4	1							
60	2	22272-000060	RING, E- 6	2						Z	
	(A=E15636)										
61	2	22287-120000	WASHER, 12	1							
62	2	22351-030016	PIN, SPRING 3.0X16	1							
63	2	22372-040000	PIN, SNAP 4	2							
64	2	23887-100002	PLUG, 10	1							
65	2	24311-240100	O-RING, 1AP10A	1							
66	2	26022-050102	SCREW, M5X10	2							
67	2	26023-050102	SCREW, M5X10	2							
68	2	26106-060202	BOLT, M6X 20 PLATED	6							
69	2	26756-060002	NUT, LOCK M6	1							
70	2	26776-120002	NUT, LOCK M12	2							
71	2	22190-060002	WASHER, SEAL 6	1							
71-1	2	22190-060002	WASHER, SEAL 6	2						K	
	(A=E15636)										
72	2	22190-100002	WASHER, SEAL 10	1							
73	2	22190-120002	WASHER, SEAL 12	2							
74	2	171488-61440	LEVER, CONTROL	1							
75	2	129155-61802	LEVER, STOP	1							

N:Old ←Yes/No→ New. Q:Old ←No/Yes→ New. R:Old ←Yes/Yes→ New. S:Old ←No/No→ New. W:Add. Z:Discontinued. F:Interchangeable by set. K:Q'ty Change

++ CONTINUE ++

Copyright (C) YANMAR CO., LTD. All RightsReserved.

Fig.74. GOVERNOR

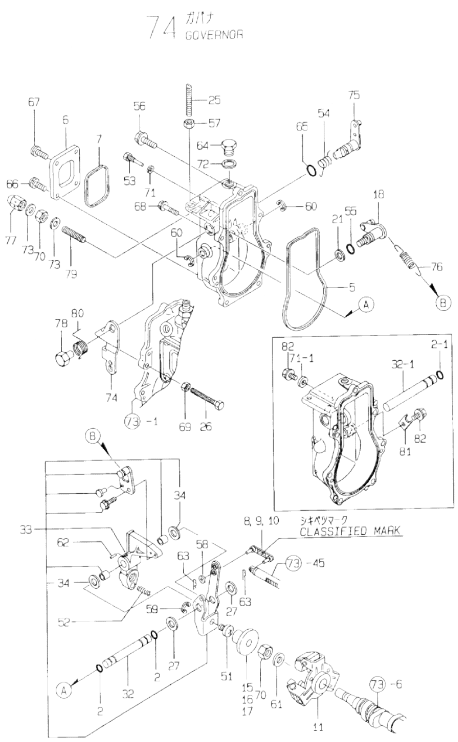

Remarks
(1) SELECTIVE PARTS;CERTAIN THE CLASSIFICATION MARK,THEN PLACE YOUR ORDER.(REF.TO.ILLUSTRATION).
(2) SELECTIVE PART.
* THIS FIGURE(GOVERNOR ASSY)IS INCORPORATED IN THE FUEL INJECTION PUMP ASSY(FIG.73).

(A)=3TNE84T-GH (D)=
(B)= (E)=
(C)= (F)=

No.	Lev.	Parts No.	Description	Q'ty (A)	(B)	(C)	(D)	(E)	(F)	I	R
76	2	171335-61710	SPRING, GOVERNOR	1							
77	2	26687-120002	NUT, CAP M12	1							
78	2	129255-61410	NUT, LOCK	1							
79	2	129155-61470	BOLT, CONTROL	1							
80	2	129255-61420	SPRING, RETURN	1							
81	2	119660-61901	RETAINER, SHAFT	1							W
	(A=E15636)										
82	2	26106-060102	BOLT, M6X 10 PLATED	2							W
	(A=E15636)										

N:Old ←Yes/No→ New. Q:Old ←No/Yes→ New. R:Old ←Yes/Yes→ New. S:Old ←No/No→ New. W:Add. Z:Discontinued. F:Interchangeable by set. K:Q'ty Change

Copyright (C) YANMAR CO., LTD. All RightsReserved.

Fig.75. FUEL FEED PUMP

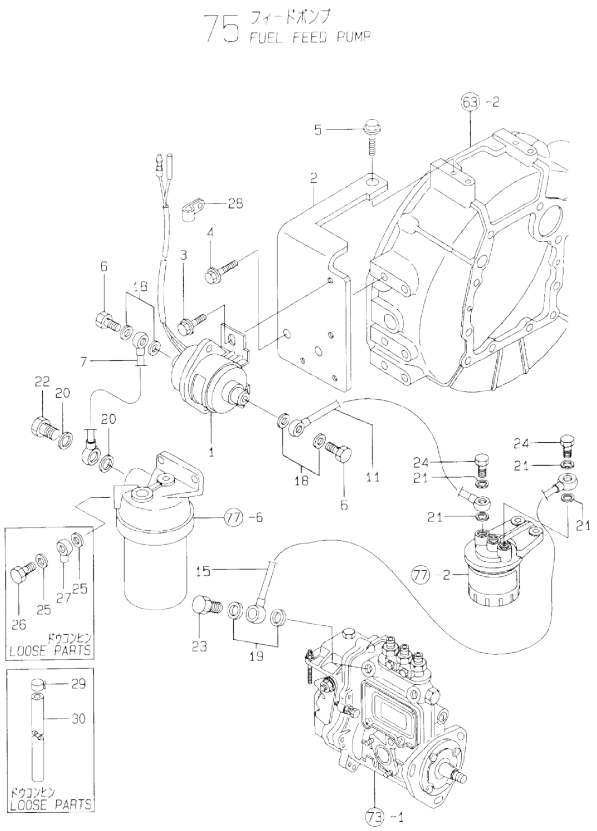

(A)=3TNE84T-GH
(B)=
(C)=
(D)=
(E)=
(F)=

No.	Lev.	Parts No.	Description	Q'ty (A)	(B)	(C)	(D)	(E)	(F)	I	R
1	1	124790-52201	PUMP ASSY, FUEL FEED	1							
2	1	171375-52501	BRACKET, PUMP	1							
3	1	26106-060102	BOLT, M6X 10 PLATED	2							
4	1	26106-080162	BOLT, M8X 16 PLATED	2							
5	1	26106-100162	BOLT, M10X 16 PLATED	1							
6	1	105582-59150	BOLT, PIPE JOINT	2							
7	1	171375-59500	PIPE ASSY, FUEL	1							
11	1	171375-59511	PIPE ASSY, FUEL	1							
15	1	171375-59521	PIPE ASSY, FUEL	1							
18	1	23414-080012	GASKET, 8X1.0	4							
19	1	23414-120000	GASKET, 12X1.0	2							
20	1	23414-120000	GASKET, 12X1.0	2							
21	1	23414-120000	GASKET, 12X1.0	4							
22	1	23857-060000	BOLT, JOINT 6	1							
23	1	23857-060000	BOLT, JOINT 6	1							
24	1	23857-060000	BOLT, JOINT 6	2							
25	1	23414-120000	GASKET, 12X1.0	2							
26	1	23857-060000	BOLT, JOINT 6	1							
27	1	103854-39540	JOINT, PIPE	1							
28	1	194440-51620	CLAMP	1							
29	1	124766-59050	CLIP, HOSE 12	4							
30	1	121137-59080	PIPE, FUEL D12X1150	1							

N:Old ←Yes/No→ New. Q:Old ←No/Yes→ New, R:Old ←Yes/Yes→ New, S:Old ←No/No→ New. W:Add. Z:Discontinued. F:Interchangeable by set. K:Q'ty Change

Copyright (C) YANMAR CO., LTD. All RightsReserved.

Fig.76. FUEL INJECTION VALVE

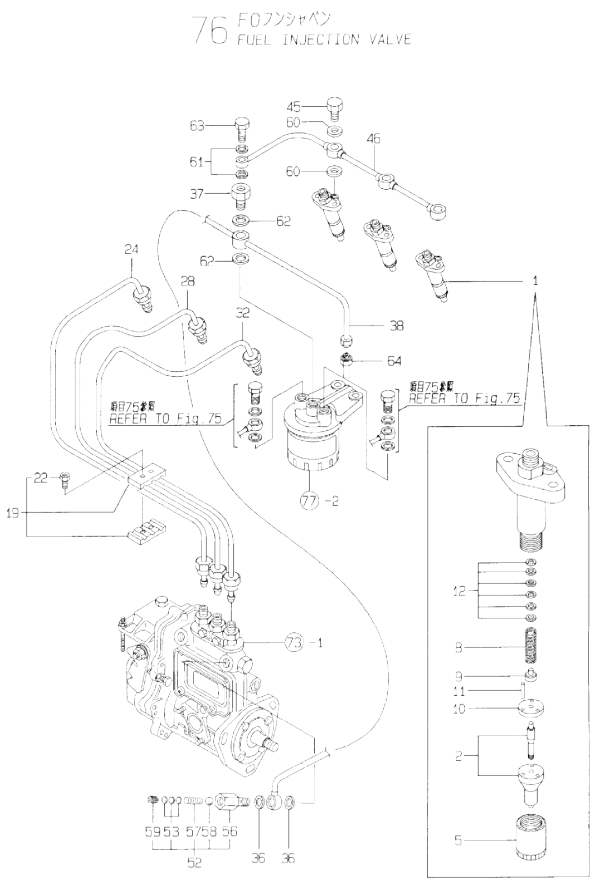

(A)=3TNE84T-GH
(B)=
(C)=
(D)=
(E)=
(F)=

No.	Lev.	Parts No.	Description	Q'ty (A)	(B)	(C)	(D)	(E)	(F)	I	R
1	1	729103-53300	VALVE ASSY,INJECTION	3							
2	2	129103-53050	VALVE ASSY,INJECTION	3							
5	2	114250-53080	NUT, NOZZLE D16.95	3							
8	2	114250-53120	SPRING, NOZZLE	3							
9	2	114250-53130	SEAT, SPRING	3							
10	2	114250-53140	PLATE	3							
11	2	114250-53210	PIN	6							
12	2	114250-53400	SHIM SET	3							
19	1	129150-59120	RETAINER, PIPE	1							
22	2	129150-59131	BOLT, M4X14	2							
24	1	129100-59811	PIPE ASSY, INJECTION	1							
28	1	129100-59821	PIPE ASSY, INJECTION	1							
32	1	129100-59831	PIPE ASSY, INJECTION	1							
36	1	104200-59170	GASKET, 12	2							
37	1	129495-59300	BOLT, PIPE JOINT	1							
38	1	171375-59530	PIPE ASSY, FUEL	1							
45	1	129491-59540	BOLT, PIPE JOINT M6	3							
46	1	171375-59551	PIPE ASSY, RETURN	1							
52	1	129100-59951	VALVE ASSY, CHECK	1							
53	2	129100-59850	SHIM SET	1							
56	2	129100-59961	BODY, VALVE	1							
57	2	129100-59970	SPRING	1							
58	2	24190-080001	BALL, STEEL 1/4	1							
59	2	27241-100000	PLUG, 10	1							
60	1	23414-060000	GASKET, 6X1.0	6							
61	1	23414-080012	GASKET, 8X1.0	2							
62	1	23414-140000	GASKET, 14X1.0	2							
63	1	23851-030000	JOINT BOLT 3	1							
64	1	43551-001451	UNION 8(M)	1							

N:Old ←Yes/No→ New. Q:Old ←No/Yes→ New. R:Old ←Yes/Yes→ New. S:Old ←No/No→ New. W:Add. Z:Discontinued. F:Interchangeable by set. K:Q'ty Change

Copyright (C) YANMAR CO., LTD. All RightsReserved.

Fig.77. FUEL FILTER

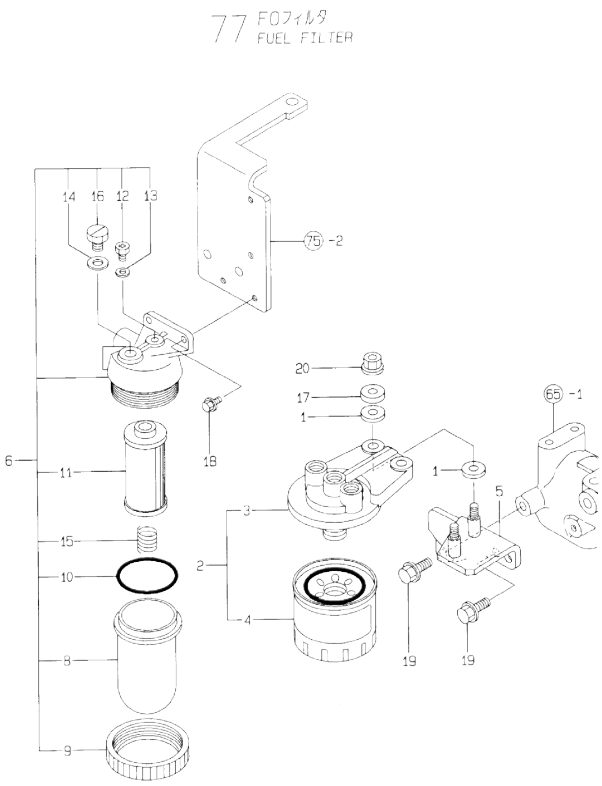

(A)=3TNE84T-GH (D)=
(B)= (E)=
(C)= (F)=

No.	Lev.	Parts No.	Description	Q'ty (A)	(B)	(C)	(D)	(E)	(F)	I	R
1	1	160610-55460	INSULATOR	4							
2	1	129470-55601	FILTER ASSY, FUEL	1							
3	2	129470-55610	BODY, STRAINER	1							
4	2	129470-55701	STRAINER ASSY, FUEL	1							
5	1	171375-55612	BRACKET, STRAINER	1							
6	1	171081-55900	FILTER ASSY, PRE	1							
8	2	121370-55730	CUP, STRAINER	1							
9	2	110250-55610	RING, RETAINING	1							
10	2	103854-32050	O-RING	1							
11	2	171081-55910	SCREEN	1							
12	2	101720-55750	PLUG, 6	1							
13	2	23418-060000	GASKET, 6X1.0	1							
14	2	23414-080012	GASKET, 8X1.0	1							
15	2	121257-55720	SPRING	1							
16	2	135210-51900	PLUG	1							
17	1	121236-77340	SPACER	2							
18	1	26106-060142	BOLT, M6X 14 PLATED	2							
19	1	26106-080162	BOLT, M8X 16 PLATED	2							
20	1	26366-080002	NUT, M8	2							

N:Old ←Yes/No→ New. Q:Old ←No/Yes→ New. R:Old ←Yes/Yes→ New. S:Old ←No/No→ New. W:Add. Z:Discontinued. F:Interchangeable by set. K:Q'ty Change

Copyright (C) YANMAR CO., LTD. All RightsReserved.

Fig.78. ENGINE STOP DEVICE

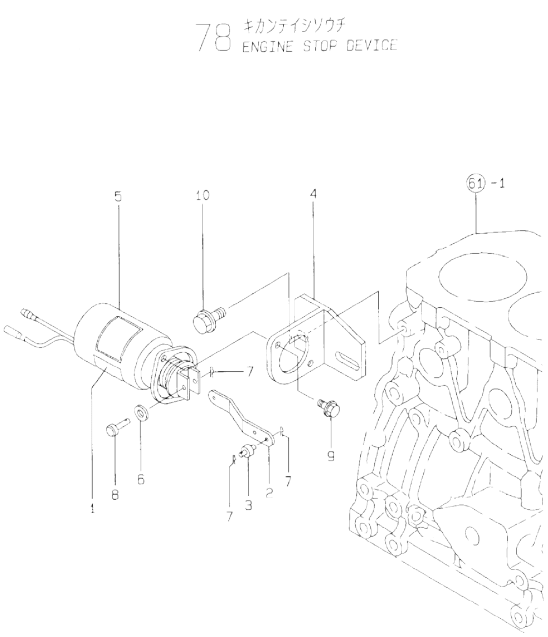

(A)=3TNE84T-GH
(B)=
(C)=
(D)=
(E)=
(F)=

No.	Lev.	Parts No.	Description	Q'ty (A)	(B)	(C)	(D)	(E)	(F)	I	R
1	1	171010-65100	LABEL	1							
2	1	171335-65110	LINK, SOLENOID	1							
3	1	171335-65120	PIN	1							
4	1	171335-65130	BRACKET, SOLENOID	1							
5	1	171335-77951	SOLENOID, MAGNETIC	1							
6	1	22117-050000	WASHER, 5	1							
7	1	22360-050000	SNAP PIN 5	3							
8	1	22487-050160	PIN, H 5X 16	1							
9	1	26106-060122	BOLT, M6X 12 PLATED	2							
10	1	26106-080142	BOLT, M8X 14 PLATED	2							

N:Old ◄Yes/No► New. Q:Old ◄No/Yes► New, R:Old ◄Yes/Yes► New, S:Old ◄No/No► New, W:Add, Z:Discontinued, F:Interchangeable by set, K:Q'ty Change

Copyright (C) YANMAR CO., LTD. All RightsReserved.

Fig.79. STARTING MOTOR

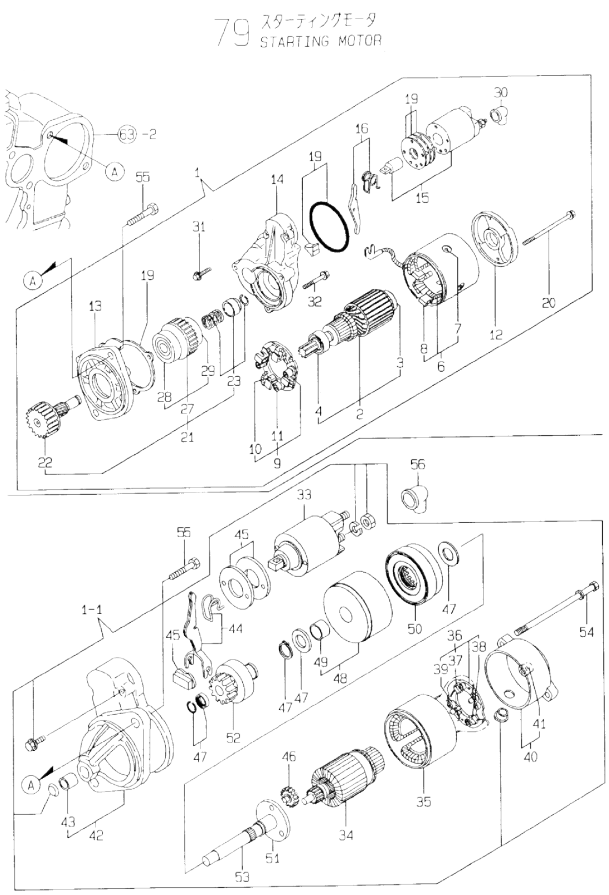

(A)=3TNE84T-GH
(B)=
(C)=
(D)=
(E)=
(F)=

No.	Lev.	Parts No.	Description	Q'ty (A)	(B)	(C)	(D)	(E)	(F)	I	R
1	1	171008-77010	STARTER, S114-483	1							
1-1	1	129698-77010	STARTER, 12V1.2KW	1							R
	(A=E19058)										
2	2	171008-77400	ARMATURE ASSY	1							Z
	(A=E19058)										
3	3	171008-77410	BEARING	1							Z
	(A=E19058)										
4	3	171008-77420	BEARING	1							Z
	(A=E19058)										
6	2	171008-77440	COIL ASSY, FIELD	1							Z
	(A=E19058)										
7	3	171008-77450	SCREW	4							Z
	(A=E19058)										
8	3	171008-77460	BRUSH (+)	2							Z
	(A=E19058)										
9	2	171008-77470	HOLDER ASSY, BRUSH	1							Z
	(A=E19058)										
10	3	171008-77480	BRUSH (-)	2							Z
	(A=E19058)										
11	3	171008-77490	SPRING, BRUSH	4							Z
	(A=E19058)										
12	2	171008-77500	COVER, REAR	1							Z
	(A=E19058)										
13	2	171008-77510	CASE, GEAR	1							Z
	(A=E19058)										
14	2	171008-77520	HOUSING, CENTER	1							Z
	(A=E19058)										
15	2	171008-77530	SWITCH, MAGNETIC	1							Z
	(A=E19058)										
16	2	171008-77540	LEVER SET	1							Z
	(A=E19058)										
19	2	171008-77571	COVER KIT, DUST	1							Z
	(A=E19058)										
20	2	171008-77640	BOLT, THROUGH	2							Z
	(A=E19058)										
21	2	171008-77650	PINION ASSY	1							Z
	(A=E19058)										
22	3	171008-77660	SHAFT	1							Z
	(A=E19058)										
23	3	171008-77670	STOPPER SET	1							Z
	(A=E19058)										
27	3	171008-77720	CLUTCH ASSY	1							Z
	(A=E19058)										
28	4	171008-77730	BEARING, BALL	1							Z
	(A=E19058)										
29	4	171008-77740	BEARING	1							Z
	(A=E19058)										
30	2	171008-77750	COVER	1							Z
	(A=E19058)										
31	2	26106-060322	BOLT, M6X 32 PLATED	2							Z
	(A=E19058)										

N:Old ←Yes/No→ New. Q:Old ←No/Yes→ New. R:Old ←Yes/Yes→ New. S:Old ←No/No→ New. W:Add. Z:Discontinued. F:Interchangeable by set. K:Q'ty Change

++ CONTINUE ++

Copyright (C) YANMAR CO., LTD. All RightsReserved.

Fig.79. STARTING MOTOR

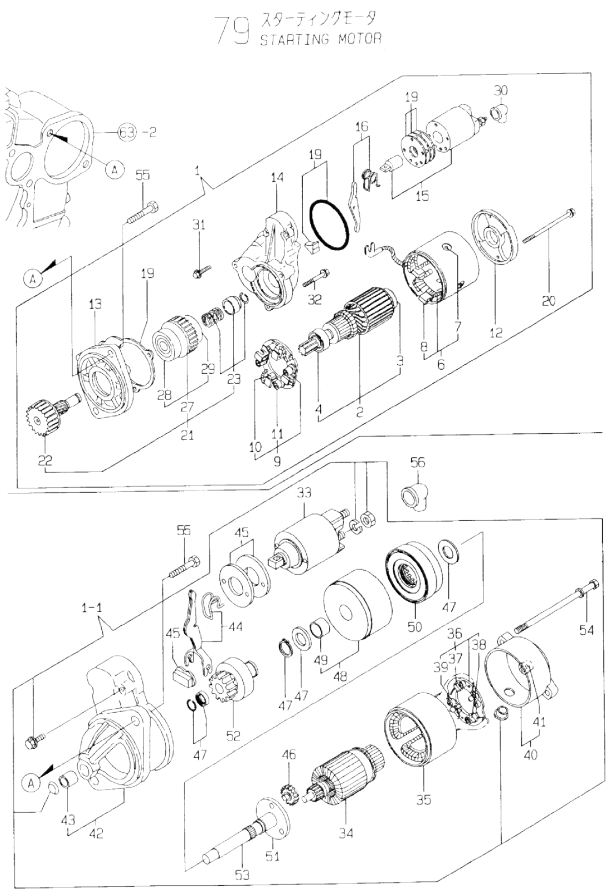

(A)=3TNE84T-GH (D)=
(B)= (E)=
(C)= (F)=

No.	Lev.	Parts No.	Description	Q'ty (A)	(B)	(C)	(D)	(E)	(F)	I	R
32	2	26106-060402	BOLT, M6X 40 PLATED	3						Z	
	(A=E19058)										
33	2	124298-77020	SWITCH, MAGNETIC	1						W	
	(A=E19058)										
34	2	129698-77100	ARMATURE ASSY	1						W	
	(A=E19058)										
35	2	129698-77110	YOKE ASSY	1						W	
	(A=E19058)										
36	2	129698-77120	HOLDER ASSY, BRUSH	1						W	
	(A=E19058)										
37	3	129698-77140	BRUSH SET	1						W	
	(A=E19058)										
38	3	129698-77130	BRUSH	2						W	
	(A=E19058)										
39	3	129698-77150	SPRING, BRUSH	4						W	
	(A=E19058)										
40	2	129698-77160	COVER ASSY	1						W	
	(A=E19058)										
41	3	129698-77170	BEARING	1						W	
	(A=E19058)										
42	2	129698-77260	CASE ASSY	1						W	
	(A=E19058)										
43	3	X2114535200	METAL, STARTER	1						W	
	(A=E19058)										
44	2	129698-77270	LEVER SET, SHIFT	1						W	
	(A=E19058)										
45	2	129698-77280	COVER KIT	1						W	
	(A=E19058)										
46	2	129698-77240	GEAR	3						W	
	(A=E19058)										
47	2	129698-77250	WASHER SET	1						W	
	(A=E19058)										
48	2	129698-77180	BRACKET	1						W	
	(A=E19058)										
49	3	129698-77190	BRACKET	1						W	
	(A=E19058)										
50	2	129698-77200	GEAR, INTERNAL	1						W	
	(A=E19058)										
51	2	129698-77210	BRACKET	1						W	
	(A=E19058)										
52	2	129698-77220	PINION ASSY	1						W	
	(A=E19058)										
53	2	129698-77230	SHAFT	1						W	
	(A=E19058)										
54	2	124195-77770	BOLT, THROUGH	2						W	
	(A=E19058)										
55	1	26116-120252	BOLT, M12X 25 PLATED	2							
56	1	124550-77030	COVER, TERMINAL	1							

N:Old ←Yes/No→ New. Q:Old ←No/Yes→ New. R:Old ←Yes/Yes→ New. S:Old ←No/No→ New. W:Add. Z:Discontinued. F:Interchangeable by set. K:Q'ty Change

Copyright (C) YANMAR CO., LTD. All RightsReserved.

Fig.80. TENSION PULLEY

(A)=3TNE84T-GH
(B)=
(C)=
(D)=
(E)=
(F)=

No.	Lev.	Parts No.	Description	Q'ty (A)	(B)	(C)	(D)	(E)	(F)	I	R
1	1	121450-01570	STUD	1							
2	1	171375-44300	PULLEY ASSY, TENSION	1							
3	2	171011-44301	PULLEY, TENSION	1							
4	2	171375-44320	BRACKET, PULLEY	1							
5	2	26706-100002	NUT, M10	1							
6	1	26366-100002	NUT, M10	1							
7	1	129400-77330	ADJUSTER	1							
8	1	26014-080252	BOLT, M8X 25	1							
9	1	26106-080502	BOLT, M8X 50 PLATED	1							

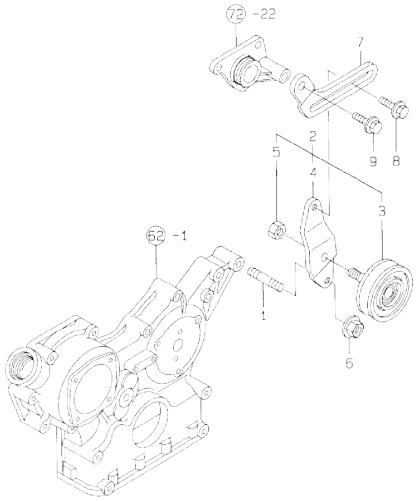

N:Old ←Yes/No→ New. Q:Old ←No/Yes→ New. R:Old ←Yes/Yes→ New. S:Old ←No/No→ New. W:Add. Z:Discontinued. F:Interchangeable by set. K:Q'ty Change

Copyright (C) YANMAR CO., LTD. All RightsReserved.

Fig.81. ELECTRIC PARTS

(A)=3TNE84T-GH
(B)=
(C)=
(D)=
(E)=
(F)=

81 アンソウヒン
ELECTRIC PARTS

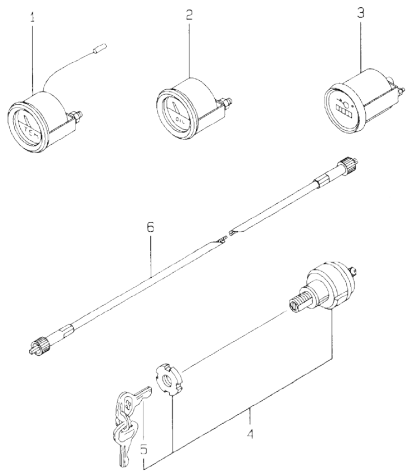

No.	Lev.	Parts No.	Description	Q'ty (A)	(B)	(C)	(D)	(E)	(F)	I	R
1	1	171010-77850	THERMOSTAT	2							
2	1	171090-91010	GAUGE	1							
3	1	171014-91101	TACHOMETER	1							
4	1	121400-91251	SWITCH, STARTER	1							
5	2	121400-91271	KEY, SWITCH	1							
6	1	121400-91140	SHAFT	1							

N:Old ◄Yes/No► New. Q:Old ◄No/Yes► New, R:Old ◄Yes/Yes► New, S:Old ◄No/No► New, W:Add, Z:Discontinued, F:Interchangeable by set, K:Q'ty Change

Copyright (C) YANMAR CO., LTD. All RightsReserved.

Fig.82. GASKET SET

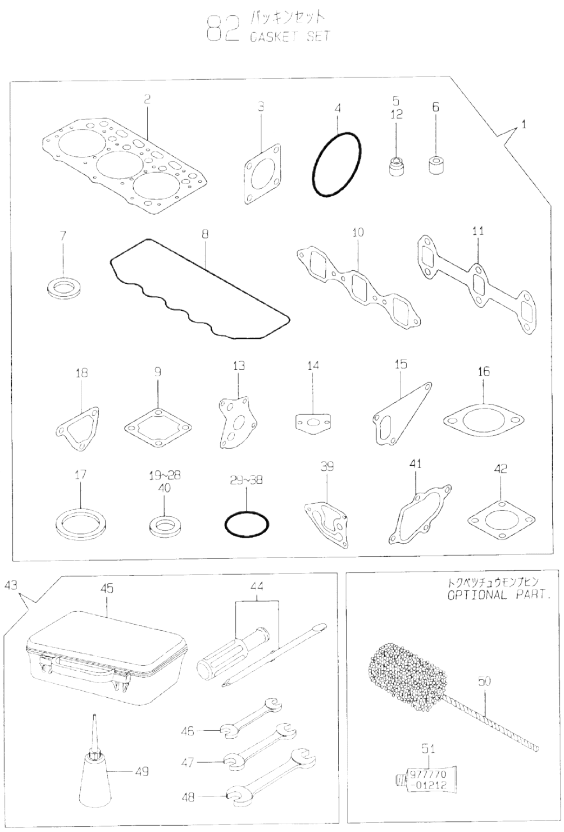

(A)=3TNE84T-GH
(B)=
(C)=
(D)=
(E)=
(F)=

No.	Lev.	Parts No.	Description	Q'ty (A)	(B)	(C)	(D)	(E)	(F)	I	R
1	1	729002-92690	GASKET SET	1							1
2	2	129002-01331	GASKET, HEAD	1							
3	2	124240-01883	GASKET	1							
4	2	121850-51960	O-RING	1							
5	2	124460-11340	SEAL, VALVE STEM	3							
6	2	119625-11871	PROTECTOR, NOZZLE	3							
7	2	119625-11880	SEAT, NOZZLE	3							
8	2	129150-11310	GASKET, BONNET	1							
9	2	129150-77511	GASKET	1							
10	2	129150-12111	GASKET, MANIFOLD	1							
11	2	129150-13110	GASKET	1							
12	2	121400-11340	SEAL, VALVE STEM	3							
13	2	129150-32020	GASKET, PUMP	1							
14	2	129150-35041	GASKET	1							
15	2	129100-42020	GASKET, WATER PUMP	1							
16	2	129795-49551	GASKET	1							
17	2	129150-49811	GASKET, THERMOSTAT	1							
18	2	129100-49840	GASKET	1							
19	2	22190-080002	WASHER, SEAL 6	6							
20	2	23414-080012	GASKET, 8X1.0	6							
21	2	23414-060000	GASKET, 6X1.0	6							
22	2	23414-140000	GASKET, 14X1.0	2							
23	2	23414-080000	GASKET, 8X1.0	2							
24	2	23414-100000	GASKET, 10X1.0	4							
25	2	23414-120000	GASKET, 12X1.0	10							
26	2	23414-170000	GASKET, 17X1.0	2							
27	2	124465-44950	GASKET, 16	2							
27-1	2	124465-44950	GASKET, 16	1						K	
	(A=E16575)										
28	2	129150-49360	GASKET	1							
28-1	2	129150-49360	GASKET	2						K	
	(A=E16575)										
29	2	24311-000120	O-RING, 1AP12.0	3							
30	2	24311-000160	O-RING, 1AP16.0	2							
31	2	24311-000320	O-RING, 1AP32.0	2							
32	2	24341-000240	O-RING, 1AS24.0	1							
33	2	24341-000500	O-RING, 1AS50.0	1							
34	2	24321-000300	O-RING, 1AG30.0	1							
35	2	24311-000200	O-RING, 1AP20.0	1							
36	2	24311-000210	O-RING, 1AP21.0	1							
37	2	24321-000550	O-RING, 1AG55.0	1							
38	2	24314-000160	O-RING, 4CP16.0	1							
39	2	129103-35122	GASKET	1							
40	2	104200-59170	GASKET, 12	2							
41	2	129412-18080	GASKET	1							
42	2	129417-18100	GASKET	1							
43	1	721400-92102	BOX ASSY, TOOL	1							
44	2	104200-92350	DRIVER, SCREW	1							
45	2	104200-92600	BOX, TOOL	1							
46	2	28110-100120	SPANNER, 10X12	1							
47	2	28110-140170	SPANNER, 14X17	1							

Remarks
(1) OPTIONAL PART.

N:Old ←Yes/No→ New. Q:Old ←No/Yes→ New. R:Old ←Yes/Yes→ New. S:Old ←No/No→ New. W:Add. Z:Discontinued. F:Interchangeable by set. K:Q'ty Change

++ CONTINUE ++

Copyright (C) YANMAR CO., LTD. All RightsReserved.

Fig.82. GASKET SET

(A)=3TNE84T-GH
(B)=
(C)=
(D)=
(E)=
(F)=

No.	Lev.	Parts No.	Description	Q'ty (A)	(B)	(C)	(D)	(E)	(F)	I	R
48	2	28110-190220	SPANNER, 19X22	1							
49	2	28210-000140	OILER	1							
50	1	129400-92420	HONE	1							1
51	1	977770-01212	GASKET, LIQUID	1							1

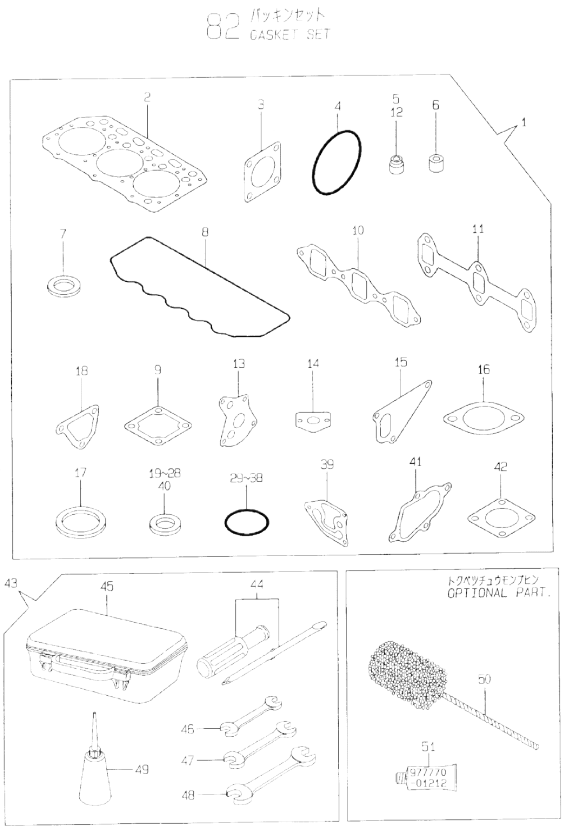

Remarks
(1) OPTIONAL PART.

N:Old ←Yes/No→ New. Q:Old ←No/Yes→ New, R:Old ←Yes/Yes→ New, S:Old ←No/No→ New, W:Add, Z:Discontinued, F:Interchangeable by set, K:Q'ty Change

Copyright (C) YANMAR CO., LTD. All RightsReserved.

Fig.83. CYLINDER BLOCK

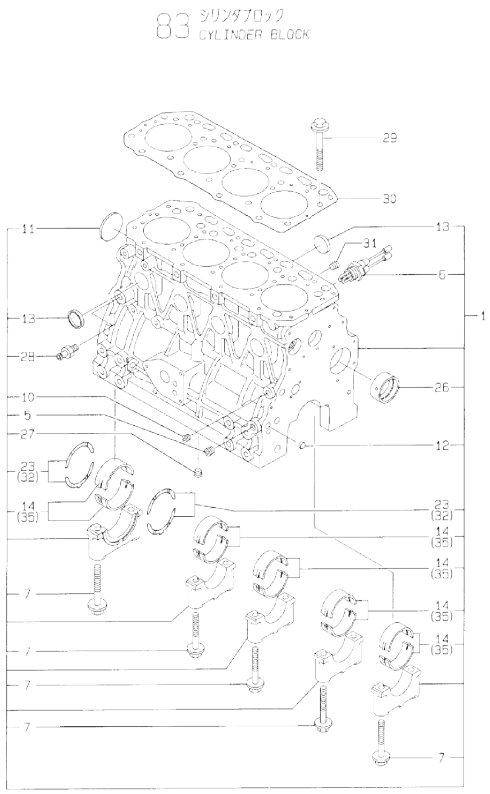

Remarks
(1) OVER-SIZE(O.S=0.25)PART.
(2) UNDER-SIZE(U.S=0.25)PART.

(A)=4TNE84T-GH
(B)=
(C)=
(D)=
(E)=
(F)=

No.	Lev.	Parts No.	Description	Q'ty (A)	(B)	(C)	(D)	(E)	(F)	I	R
1	1	729615-01560	BLOCK ASSY, CYLINDER	1							
5	2	124160-01910	PLUG, PT1/4	2							
6	2	46150-504600	HEATER	1							
6-1	2	124097-77900	HEATER,COOLING WATER	1						N	
	(A=E39511)										
7	2	129150-02020	BOLT, METAL CAP	10							
10	2	23871-010000	PLUG, R01	1							
11	2	27231-500000	PLUG 50	1							
12	2	27241-120000	PLUG, 12	2							
13	2	27241-300000	PLUG 30	8							
14	2	129001-02800	BEARING, MAIN	5							
23	2	129150-02930	BEARING, THRUST	2							
26	2	129795-02411	BUSH, CAMSHAFT	1							
27	2	124160-01910	PLUG, PT1/4	1							
28	2	121550-49111	JOINT, PT1/4	1							
29	1	129150-01200	BOLT, HEAD	18							
30	1	129408-01330	GASKET, HEAD	1							
31	1	23871-030000	PLUG, R03	1							
32	1	129150-02940	BEARING, THRUST 0.25	2							1
35	1	129150-02870	BEARING, 0.25 US	5							2

N:Old ←Yes/No→ New. Q:Old ←No/Yes→ New, R:Old ←Yes/Yes→ New, S:Old ←No/No→ New, W:Add, Z:Discontinued, F:Interchangeable by set, K:Q'ty Change

Copyright (C) YANMAR CO., LTD. All RightsReserved.

Fig.84. GEAR HOUSING

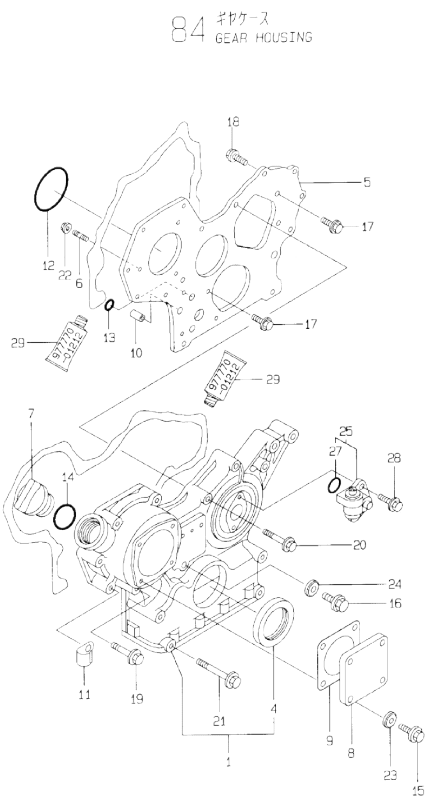

Remarks
(1) OPTIONAL PART.

(A)=4TNE84T-GH
(B)=
(C)=
(D)=
(E)=
(F)=

No.	Lev.	Parts No.	Description	Q'ty (A)	(B)	(C)	(D)	(E)	(F)	I	R
1	1	719810-01500	CASE ASSY, GEAR	1							
4	2	129795-01800	SEAL, OIL	1							
5	1	129400-01520	FLANGE, GEAR CASE	1							
6	1	121450-01560	STUD, M8X22	3							
7	1	124160-01751	COVER, FILLER	1							
8	1	124240-01871	COVER	1							
9	1	124240-01883	GASKET	1							
10	1	129795-01950	PIPE, KNOCK L=18	2							
11	1	129150-03100	RETAINER, PIPE	1							
12	1	121850-51960	O-RING	1							
13	1	24311-000160	O-RING, 1AP16.0	2							
14	1	24311-000320	O-RING, 1AP32.0	1							
15	1	26106-080122	BOLT, M8X 12 PLATED	4							
16	1	26106-080162	BOLT, M8X 16 PLATED	1							
17	1	26106-080162	BOLT, M8X 16 PLATED	3							
18	1	26106-080202	BOLT, M8X 20 PLATED	2							
19	1	26106-080452	BOLT, M8X 45 PLATED	6							
20	1	26106-080552	BOLT, M8X 55 PLATED	3							
21	1	26106-080852	BOLT, M8X 85 PLATED	4							
22	1	26366-080002	NUT, M8	3							
23	1	22190-080002	WASHER, SEAL 6	4							
24	1	22190-080002	WASHER, SEAL 6	1							
25	1	129150-91400	GEAR	1							
27	2	24341-000240	O-RING, 1AS24.0	1							
28	1	26106-060162	BOLT, M6X 16 PLATED	2							
29	1	977770-01212	GASKET, LIQUID	1							1

N:Old ◄Yes/No► New. Q:Old ◄No/Yes► New. R:Old ◄Yes/Yes► New. S:Old ◄No/No► New. W:Add. Z:Discontinued. F:Interchangeable by set. K:Q'ty Change

Copyright (C) YANMAR CO., LTD. All RightsReserved.

Fig.85. FLYWHEEL HOUSING &LUB.OIL SUMP

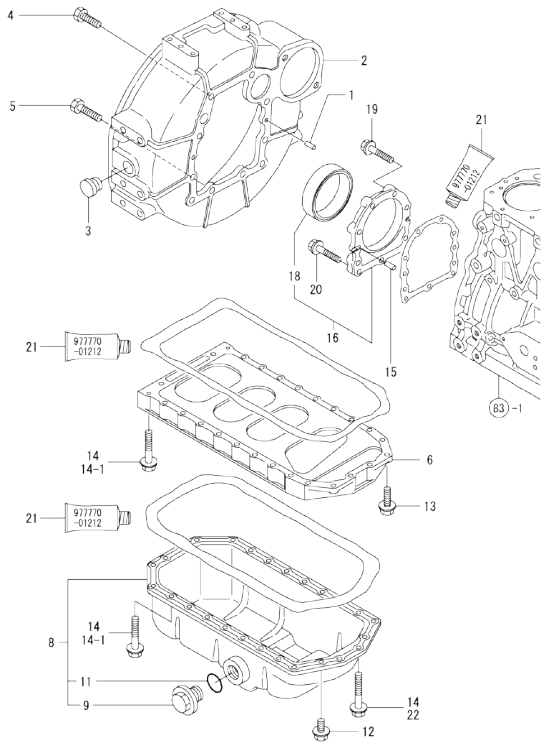

Remarks
(1)Optional parts.
(2)For repair.

(A)=4TNE84T-GH
(B)=
(C)=
(D)=
(E)=
(F)=

No.	Lev.	Parts No.	Description	Q'ty (A)	(B)	(C)	(D)	(E)	(F)	I	R
1	1	129100-01580	PIN, M8X16	2							
2	1	171301-01600	HOUSING, FLYWHEEL	1							
3	1	119620-01750	CAP	1							
4	1	26206-100252	BOLT, M10X 25 PLATED	6							
5	1	26206-100302	BOLT, M10X 30 PLATED	4							
6	1	129400-01730	SPACER, OIL SUMP	1							
8	1	129400-01770	SUMP ASSY, OIL	1							
8-1	1	129688-01780	OIL PAN ASSY, DEEP	1						N	2
	(A=REF. TO R)										
9	2	171301-01640	PLUG, 22	1							
11	2	24341-000250	O-RING, 1AS25.0	1							
12	1	26106-080162	BOLT, M8X 16 PLATED	4							
13	1	26106-080252	BOLT, M8X 25 PLATED	2							
14	1	26106-080452	BOLT, M8X 45 PLATED	24							
14-1	1	26106-080452	BOLT, M8X 45 PLATED	20						K	
	(A=FROM 1ST)										
15	1	129100-01580	PIN, M8X16	2							
16	1	129100-01640	CASE ASSY, OIL SEAL	1							
18	2	129795-01780	SEAL, OIL	1							
19	1	26106-080302	BOLT, M8X 30 PLATED	6							
19-1	1	129486-01670	BOLT, M8X30	6						R	
	(A=E03919)										
20	1	26106-080352	BOLT, M8X 35 PLATED	3							
21	1	977770-01212	GASKET, LIQUID	1							1
22	1	26106-080502	BOLT, M8X 50 PLATED	4						W	
	(A=FROM 1ST)										

N:Old ←Yes/No→ New. Q:Old ←No/Yes→ New, R:Old ←Yes/Yes→ New, S:Old ←No/No→ New, W:Add, Z:Discontinued. F:Interchangeable by set. K:Q'ty Change

Copyright (C) YANMAR CO., LTD. All RightsReserved.

Fig.86. CYLINDER HEAD & BONNET

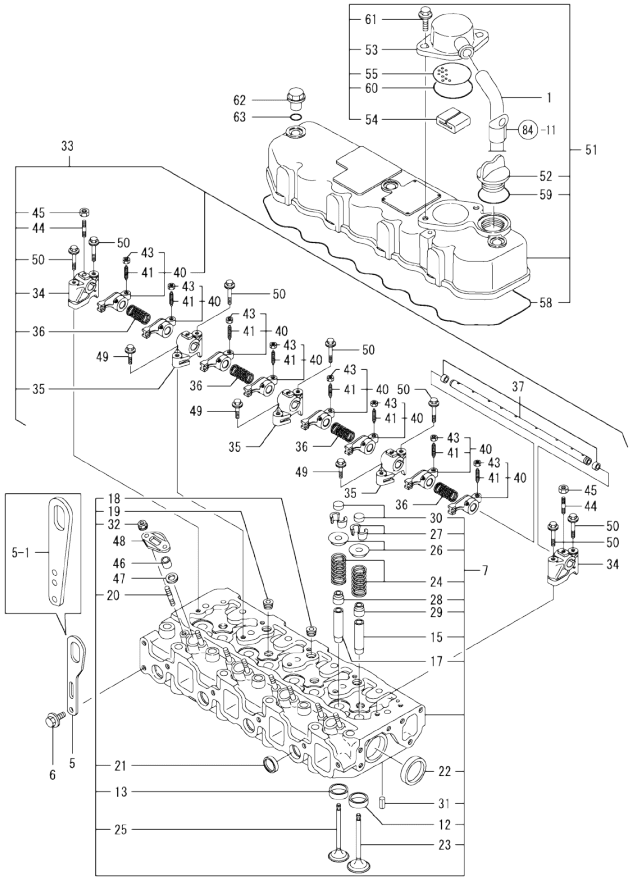

Remarks
(1) REPAIR PART.

(A)=4TNE84T-GH
(B)=
(C)=
(D)=
(E)=
(F)=

No.	Lev.	Parts No.	Description	Q'ty (A)	(B)	(C)	(D)	(E)	(F)	I	R
1	1	129150-03090	HOSE, ID16X2T	1							
5	1	124736-07900	LIFTER	1							
5-1	1	129900-07900	LIFTER	1						N	
	(A=*2009.08)										
6	1	26106-080142	BOLT, M8X 14 PLATED	2							
7	1	729408-11701	HEAD ASSY, CYLINDER	1							
7-1	1	729418-11100	HEAD ASSY, CYLINDER	1						N	
	(A=E05340)										
12	2	129470-11080	SEAT, INTAKE VALVE	4							
13	2	129470-11090	SEAT, EXHAUST VALVE	4							
15	2	120130-11860	GUIDE, VALVE	4							1
17	2	129150-11810	GUIDE, VALVE	4							1
18	2	23871-020000	PLUG, R02	3							
19	2	23871-030000	PLUG, R03	4							
20	2	26216-060202	STUD, M6X 20	8							
21	2	27241-220000	PLUG, 22	4							
22	2	27241-400000	PLUG, 40	2							
23	2	129100-11100	VALVE, INTAKE	4							
24	2	129795-11120	SPRING, VALVE	8							
25	2	129100-11130	VALVE, EXHAUST	4							
26	2	129795-11180	RETAINER, SPRING	8							
27	2	27310-080001	COTTER, 8	8							
28	2	121400-11340	SEAL, VALVE STEM	4							
29	2	124460-11340	SEAL, VALVE STEM	4							
30	2	129150-11370	CAP, VALVE	8							
31	2	22351-060012	PIN, SPRING 6.0X12	2							
32	2	26366-060002	NUT, M6	8							
33	1	129555-11241	SHAFT ASSY, ROCKER	1							
34	2	129155-11260	SUPPORT, ROCKER ARM	2							
35	2	129155-11270	SUPPORT, ROCKER ARM	3							
36	2	129150-11280	SPRING	4							
37	2	129550-11290	SHAFT, ROCKER ARM	1							
40	2	729402-11650	ARM ASSY, ROCKER	8							
41	3	129150-11230	SCREW, VALVE ADJUST	8							
43	3	129150-11750	NUT, M8	8							
44	2	26226-080182	STUD, M8X 18	3							
45	2	26756-080002	NUT, LOCK M8	3							
46	1	119625-11871	PROTECTOR, NOZZLE	4							
47	1	119625-11880	SEAT, NOZZLE	4							
48	1	119625-11900	RETAINER, NOZZLE	4							
49	1	26106-080252	BOLT, M8X 25 PLATED	3							
50	1	26106-080502	BOLT, M8X 50 PLATED	7							
51	1	129400-11350	BONNET ASSY, HEAD	1							
52	2	124160-01751	COVER, FILLER	1							
53	2	129150-03020	COVER, BREATHER	1							
54	2	129150-03070	BAFFLE, BREATHER	1							
55	2	129150-03080	PLATE, BAFFLE	1							
58	2	129550-11310	GASKET, BONNET	1							
59	2	24311-000320	O-RING, 1AP32.0	1							
60	2	24341-000500	O-RING, 1AS50.0	1							
61	2	26106-080162	BOLT, M8X 16 PLATED	2							

N:Old ←Yes/No→ New. Q:Old ←No/Yes→ New. R:Old ←Yes/Yes→ New. S:Old ←No/No→ New. W:Add. Z:Discontinued. F:Interchangeable by set. K:Q'ty Change

++ CONTINUE ++

Copyright (C) YANMAR CO., LTD. All RightsReserved.

Fig.86. CYLINDER HEAD & BONNET

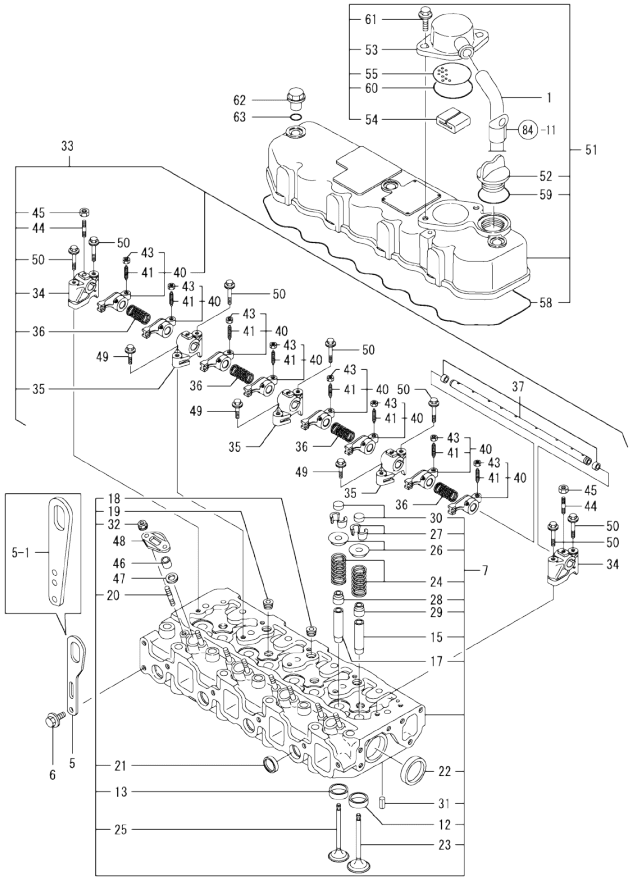

(A)=4TNE84T-GH
(B)=
(C)=
(D)=
(E)=
(F)=

No.	Lev.	Parts No.	Description	Q'ty (A)	(B)	(C)	(D)	(E)	(F)	I	R
62	1	124160-11360	KNOB	3							
63	1	24311-000120	O-RING, 1AP12.0	3							

Remarks
(1) REPAIR PART.

N:Old ←Yes/No→ New. Q:Old ←No/Yes→ New. R:Old ←Yes/Yes→ New. S:Old ←No/No→ New. W:Add. Z:Discontinued. F:Interchangeable by set. K:Q'ty Change

Copyright (C) YANMAR CO., LTD. All RightsReserved.

Fig.87. SUCTION MANIFOLD

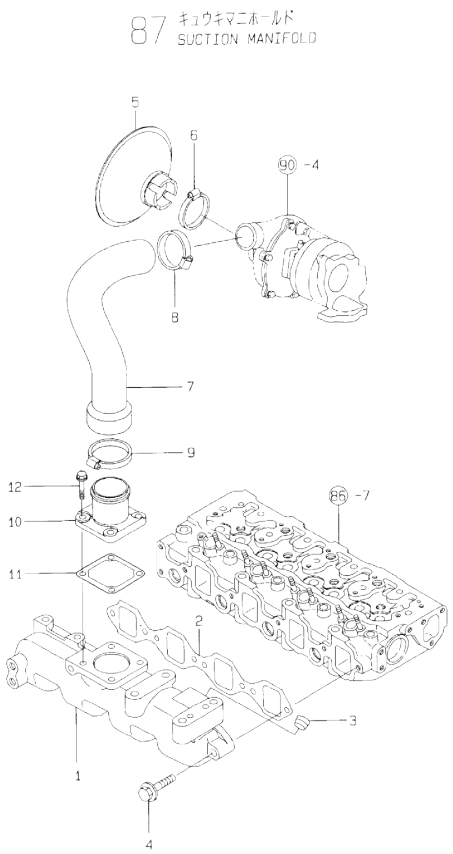

(A)=4TNE84T-GH (D)=
(B)= (E)=
(C)= (F)=

No.	Lev.	Parts No.	Description	Q'ty (A)	(B)	(C)	(D)	(E)	(F)	I	R
1	1	129400-12100	MANIFOLD, AIR INTAKE	1							
2	1	129550-12111	GASKET, MANIFOLD	1							
3	1	23871-030000	PLUG, R03	1							
4	1	26106-080352	BOLT, M8X 35 PLATED	5							
5	1	129412-12460	COVER	1							
6	1	23000-054000	CLAMP, 54	1							
7	1	129403-12090	PIPE, AIR INTAKE	1							
8	1	23000-054000	CLAMP, 54	1							
9	1	23000-060000	CLAMP, 60	1							
10	1	171463-12581	JOINT, MANIFOLD	1							
11	1	129150-77511	GASKET	1							
12	1	26106-080352	BOLT, M8X 35 PLATED	4							

N:Old ←Yes/No→ New. Q:Old ←No/Yes→ New. R:Old ←Yes/Yes→ New. S:Old ←No/No→ New. W:Add. Z:Discontinued. F:Interchangeable by set. K:Q'ty Change

Copyright (C) YANMAR CO., LTD. All RightsReserved.

Fig.88. EXHAUST MANIFOLD

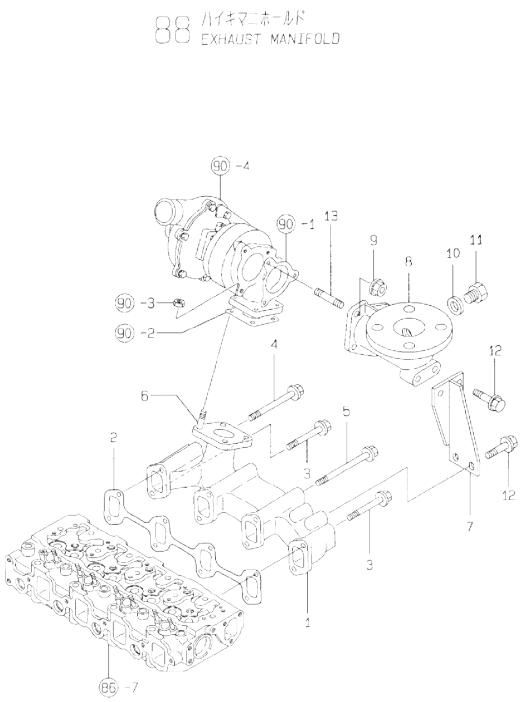

(A)=4TNE84T-GH (D)=
(B)= (E)=
(C)= (F)=

No.	Lev.	Parts No.	Description	Q'ty (A)	(B)	(C)	(D)	(E)	(F)	I	R
1	1	129406-13100	MANIFOLD, EXHAUST	1							
2	1	129550-13110	GASKET	1							
3	1	26106-080652	BOLT, M8X 65 PLATED	3							
3-1	1	119802-13650	BOLT, M8X65	3						N	
	(A=E44963)										
4	1	26106-080852	BOLT, M8X 85 PLATED	1							
4-1	1	119802-13670	BOLT, M8X85	1						N	
	(A=E44963)										
5	1	26106-081002	BOLT, M8X100 PLATED	4							
5-1	1	129693-44310	BOLT	4						N	
	(A=E44963)										
5-2	1	119802-13820	BOLT, M8X100 9.8T	4						N	
	(A=*2009.12)										
6	1	26216-080222	STUD, M8X 22	4							
6-1	1	119131-18320	STUD, M8X22	4						N	
	(A=EI0672)										
7	1	129412-18290	SUPPORT	1							
8	1	129412-18400	BEND, EXHAUST	1							
9	1	194990-22050	NUT, M8	3							
10	1	23414-170000	GASKET, 17X1.0	1							
11	1	23894-030002	PLUG, G3/8	1							
12	1	26106-080142	BOLT, M8X 14 PLATED	4							
13	1	26216-080222	STUD, M8X 22	3							

N:Old ◄Yes/No► New. Q:Old ◄No/Yes► New. R:Old ◄Yes/Yes► New. S:Old ◄No/No► New. W:Add. Z:Discontinued. F:Interchangeable by set. K:Q'ty Change

Copyright (C) YANMAR CO., LTD. All RightsReserved.

Fig.89. CAMSHAFT & DRIVING GEAR

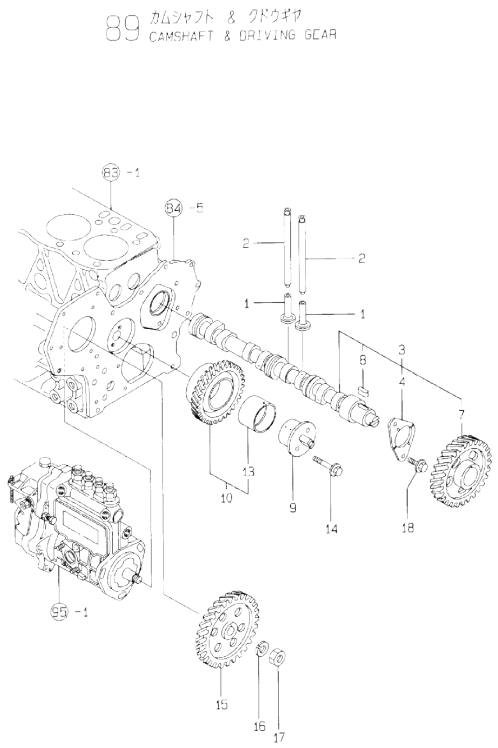

(A)=4TNE84T-GH (D)=
(B)= (E)=
(C)= (F)=

No.	Lev.	Parts No.	Description	Q'ty (A)	(B)	(C)	(D)	(E)	(F)	I	R
1	1	129150-14200	TAPPET	8							
2	1	129150-14400	ROD, PUSH L=178	8							
3	1	729402-14580	CAMSHAFT ASSY	1							
4	2	129150-02450	BEARING, THRUST	1							
7	2	129150-14101	GEAR, CAMSHAFT	1							
8	2	22512-070140	KEY, 7X 14	1							
9	1	129100-25061	SHAFT, IDLE	1							
10	1	129150-25101	GEAR ASSY, IDLE	1							
13	2	129150-25920	BUSH, IDLE GEAR	1							1
14	1	26106-080452	BOLT, M8X 45 PLATED	2							
15	1	129150-25900	GEAR, PUMP	1							
16	1	22217-120000	WASHER, SPRING 12	1							
17	1	26716-120002	NUT, M12	1							
18	1	26106-080142	BOLT, M8X 14 PLATED	2							

Remarks
(1) REPAIR PART.

N:Old ◄Yes/No► New. Q:Old ◄No/Yes► New, R:Old ◄Yes/Yes► New. S:Old ◄No/No► New. W:Add. Z:Discontinued. F:Interchangeable by set. K:Q'ty Change

Copyright (C) YANMAR CO., LTD. All RightsReserved.

Fig.90. TURBINE

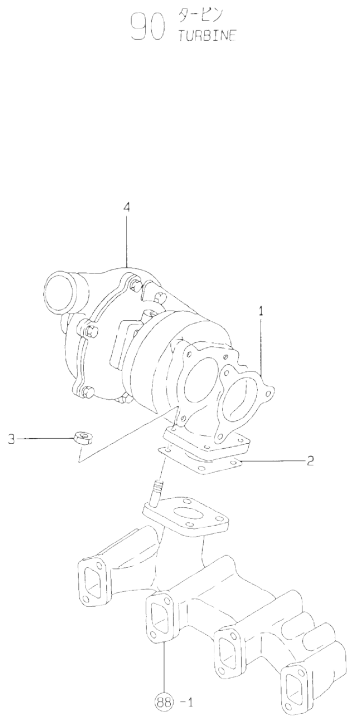

(A)=4TNE84T-GH (D)=
(B)= (E)=
(C)= (F)=

No.	Lev.	Parts No.	Description	Q'ty (A)	(B)	(C)	(D)	(E)	(F)	I	R
1	1	129792-13521	GASKET	1							
2	1	129472-18090	GASKET	1							
3	1	194990-22050	NUT, M8	4							
4	1	129406-18030	TURBINE, RHB52	1							

N:Old ◄Yes/No► New. Q:Old ◄No/Yes► New, R:Old ◄Yes/Yes► New. S:Old ◄No/No► New. W:Add. Z:Discontinued. F:Interchangeable by set. K:Q'ty Change

Copyright (C) YANMAR CO., LTD. All RightsReserved.

Fig.91. CRANKSHAFT & PISTON

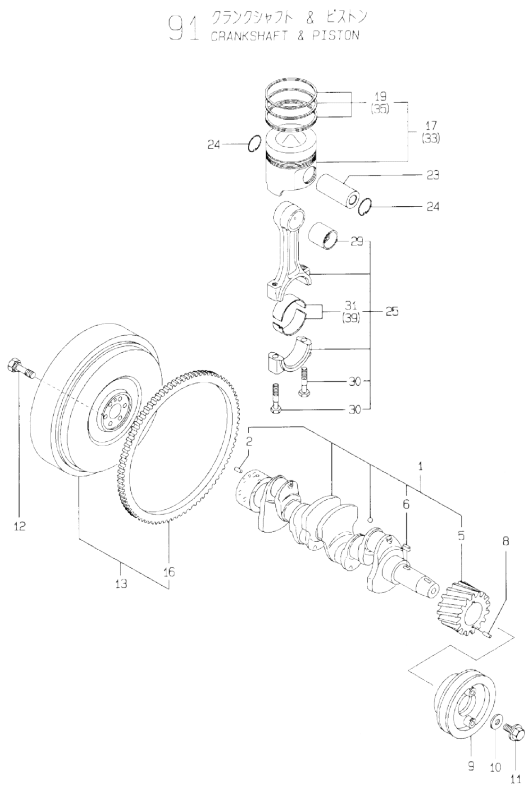

(A)=4TNE84T-GH
(B)=
(C)=
(D)=
(E)=
(F)=

No.	Lev.	Parts No.	Description	Q'ty (A)	(B)	(C)	(D)	(E)	(F)	I	R
1	1	129418-21000	CRANKSHAFT ASSY	1							
2	2	129100-01580	PIN, M8X16	1							
5	2	129150-21200	GEAR, CRANKSHAFT	1							
6	2	22512-070140	KEY, 7X 14	1							
8	1	22351-040010	PIN, SPRING 4.0X10	1							
9	1	171301-21650	V-PULLEY	1							
10	1	129795-21661	WASHER	1							
11	1	121850-21680	BOLT	1							
12	1	121111-21501	BOLT, FLYWHEEL	6							
13	1	171420-21580	FLYWHEEL ASSY	1							
16	2	119865-21600	GEAR, RING	1							
17	1	129002-22090	PISTON ASSY	4							
19	2	129002-22510	RING SET, PISTON	4							
23	1	129202-22300	PIN, PISTON D26 L70	4							
24	1	22252-000260	RING, 26	8							
25	1	729402-23100	ROD ASSY, CONNECTING	4							
29	2	129100-23910	BEARING, PISTON PIN	4							1
30	2	121550-23200	BOLT, CONNECTING ROD	8							
31	2	129150-23600	BEARING, CRANK PIN	4							
33	1	129002-22900	PISTON ASSY, 0.25 OS	4							2
35	2	129002-22950	RING SET, 0.25 OS	4							2
39	1	129150-23610	BEARING, 0.25 US	4							3

Remarks
(1) REPAIR PART.
(2) OVER-SIZE(O.S=0.25)PART.
(3) UNDER-SIZE(U.S=0.25)PART.

N:Old $\frac{\text{Yes}}{\text{No}}$ New. Q:Old $\frac{\text{No}}{\text{Yes}}$ New. R:Old $\frac{\text{Yes}}{\text{Yes}}$ New. S:Old $\frac{\text{No}}{\text{No}}$ New. W:Add. Z:Discontinued. F:Interchangeable by set. K:Q'ty Change

Copyright (C) YANMAR CO., LTD. All RightsReserved.

Fig.92. LUB.OIL SYSTEM

(A)=4TNE84T-GH
(B)=
(C)=
(D)=
(E)=
(F)=

No.	Lev.	Parts No.	Description	Q'ty (A)	(B)	(C)	(D)	(E)	(F)	I	R
1	1	129418-32000	PUMP ASSY, OIL	1							
14	1	22351-030010	PIN, SPRING 3.0X10	4							
15	1	129150-32020	GASKET, PUMP	1							
16	1	26450-060252	BOLT, M6X 25	4							
17	1	129103-33031	COOLER, OIL	1							
18	1	129103-33132	BOLT	1							
19	1	24311-000200	O-RING, 1AP20.0	1							
20	1	24311-000210	O-RING, 1AP21.0	1							
21	1	24321-000550	O-RING, 1AG55.0	1							
22	1	129430-34800	DIPSTICK, OIL	1							
23	1	121520-34810	GUIDE, DIPSTICK	1							
24	1	129150-35041	GASKET	1							
24-1	1	129150-35042	GASKET	1						N	
	(A=EXXXXX)										
25	1	129436-35090	PIPE ASSY, OIL INLET	1							
25-1	1	129436-35091	PIPE ASSY, OIL INLET	1						N	
	(A=E04719)										
25-2	1	129436-35070	PIPE ASSY	1						S	
	(A=EZZZZZ)										
29	1	26106-080352	BOLT, M8X 35 PLATED	2							
29-1	1	26106-080552	BOLT, M8X 55 PLATED	2						S	
	(A=EZZZZZ)										
30	1	129412-35102	BRACKET ASSY	1							
32	2	129100-35140	STUD	1							
33	2	23871-020000	PLUG, R02	1							
34	2	22312-060080	PIN, PARALLEL M6X 8	2							
35	2	27241-200000	PLUG, 20	1							
36	1	129103-35122	GASKET	1							
37	1	129150-35151	FILTER, D80XL80	1							
38	1	124250-49351	SENSOR	1							
39	1	129150-49360	GASKET	1							
40	1	26106-080752	BOLT, M8X 75 PLATED	3							
41	1	129792-39410	VALVE ASSY, CHECK	4							
47	1	129553-39650	NOZZLE	4							

N:Old ←Yes/No→ New. Q:Old ←No/Yes→ New. R:Old ←Yes/Yes→ New. S:Old ←No/No→ New. W:Add. Z:Discontinued. F:Interchangeable by set. K:Q'ty Change

Copyright (C) YANMAR CO., LTD. All RightsReserved.

Fig.93. LUB.OIL LINE

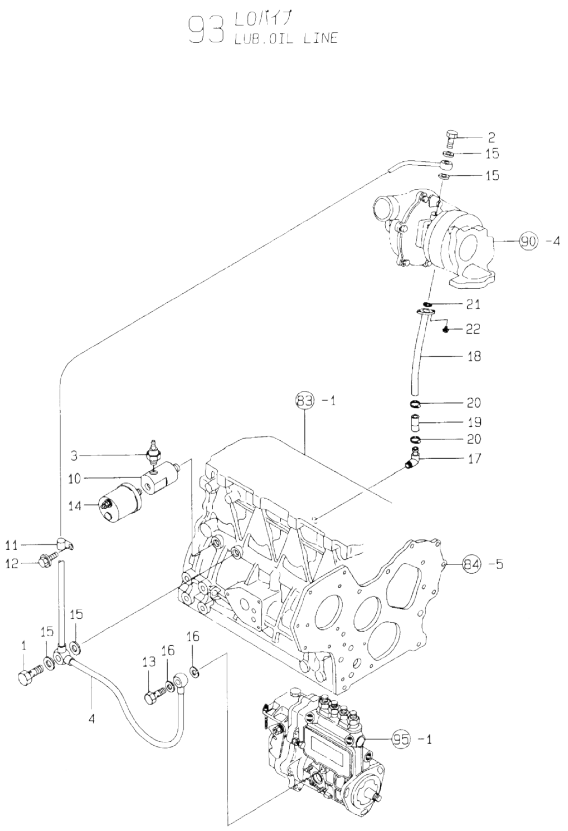

(A)=4TNE84T-GH (D)=
(B)= (E)=
(C)= (F)=

No.	Lev.	Parts No.	Description	Q'ty (A)	(B)	(C)	(D)	(E)	(F)	I	R
1	1	124160-39140	BOLT, PIPE JOINT M10	1							
2	1	121252-39150	BOLT, JOINT M10X1.5	1							
3	1	124160-39450	SWITCH, 0.5KG	1							
4	1	129403-39460	PIPE ASSY, OIL	1							
10	1	171375-39601	DAMPER, 1/8	1							
11	1	124223-39900	RETAINER	1							
12	1	26106-080102	BOLT, M8X 10 PLATED	1							
13	1	124550-59820	BOLT, PIPE JOINT M8	1							
14	1	144626-91560	SENSOR	1							
15	1	23414-100000	GASKET, 10X1.0	4							
16	1	22190-080002	WASHER, SEAL 6	2							
17	1	124070-13300	ELBOW, PT3/8	1							
18	1	129503-39600	PIPE, OIL	1							
19	1	129506-39610	JOINT, RUBBER	1							
20	1	23000-025000	CLAMP, 25	2							
21	1	24314-000160	O-RING, 4CP16.0	1							
22	1	26106-060162	BOLT, M6X 16 PLATED	2							

N:Old ←Yes/No→ New. Q:Old ←No/Yes→ New, R:Old ←Yes/Yes→ New, S:Old ←No/No→ New. W:Add. Z:Discontinued. F:Interchangeable by set. K:Q'ty Change

Copyright (C) YANMAR CO., LTD. All RightsReserved.

Fig.94. COOLING WATER SYSTEM

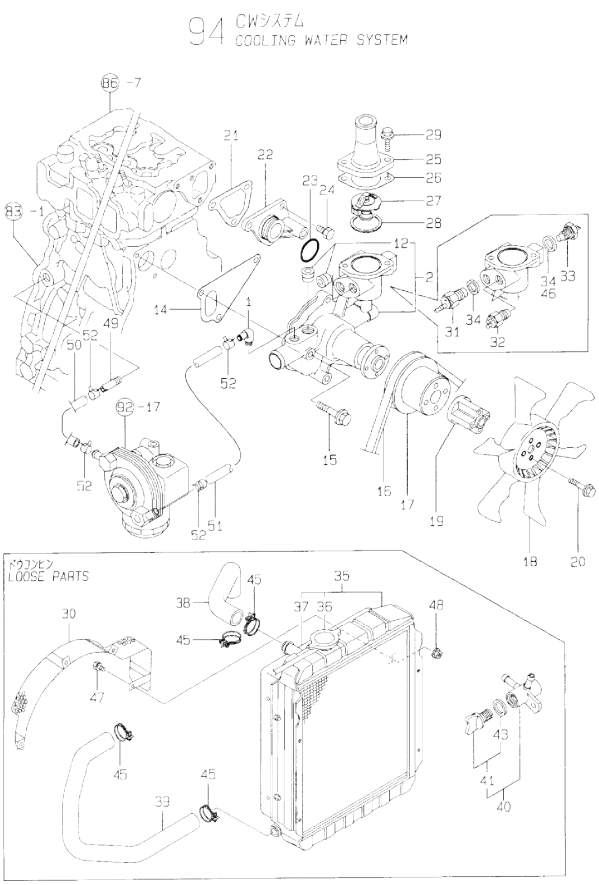

(A)=4TNE84T-GH
(B)=
(C)=
(D)=
(E)=
(F)=

No.	Lev.	Parts No.	Description	Q'ty (A)	(B)	(C)	(D)	(E)	(F)	I	R
1	1	129103-49301	ELBOW, PT1/4	1							
2	1	129001-42002	PUMP ASSY, WATER	1							
12	2	23871-030000	PLUG, R03	2							
14	1	129100-42020	GASKET, WATER PUMP	1							
15	1	26106-080602	BOLT, M8X 60 PLATED	3							
16	1	25132-003900	V-BELT, A39	1							
17	1	129556-42350	V-PULLEY, 96	1							
18	1	129432-44740	FAN, COOLING D370XEF	1							
19	1	129030-44760	SPACER, FAN L38.5	1							
20	1	26106-060502	BOLT, M6X 50 PLATED	4							
21	1	129100-49840	GASKET	1							
22	1	129001-42040	JOINT	1							
23	1	24321-000300	O-RING, 1AG30.0	1							
24	1	26106-080162	BOLT, M8X 16 PLATED	3							
25	1	129350-49560	COVER, THERMOSTAT	1							
26	1	129795-49551	GASKET	1							
27	1	129155-49800	THERMOSTAT, 71	1							
28	1	129150-49811	GASKET, THERMOSTAT	1							
29	1	26106-080202	BOLT, M8X 20 PLATED	2							
30	1	129411-44560	PROTECTOR, FAN	1							
31	1	121250-44901	SWITCH, 110	1							
32	1	171375-44900	SWITCH, 15	1							
33	1	171375-44910	SENSOR	1							
34	1	124465-44950	GASKET, 16	2							
34-1	1	124465-44950	GASKET, 16	1						K	
	(A=E04856)										
35	1	171430-44500	RADIATOR	1							
36	2	123682-44210	CAP, RADIATOR	1							
37	2	171430-44560	SHROUD	1							
38	1	171440-49010	PIPE, WATER	1							
39	1	129608-49020	PIPE, WATER	1							
40	1	129150-49100	COCK ASSY, 3-WAY	1							
41	2	129150-49080	COCK, DRAIN	1							
43	3	119629-49080	GASKET	1							
45	1	23010-038000	CLAMP, 38	4							
46	1	129150-49360	GASKET	1						W	
	(A=E04856)										
47	1	26013-080142	BOLT, M8X 14	4							
48	1	26366-080002	NUT, M8	4							
49	1	129122-44480	JOINT	1							
50	1	129403-49031	PIPE, WATER	1							
51	1	129403-49050	PIPE, WATER	1							
52	1	23000-022000	CLAMP, 22	4							

N:Old ←Yes/No→ New. Q:Old ←No/Yes→ New. R:Old ←Yes/Yes→ New. S:Old ←No/No→ New. W:Add. Z:Discontinued. F:Interchangeable by set. K:Q'ty Change

Copyright (C) YANMAR CO., LTD. All RightsReserved.

Fig.95. FUEL INJECTION PUMP

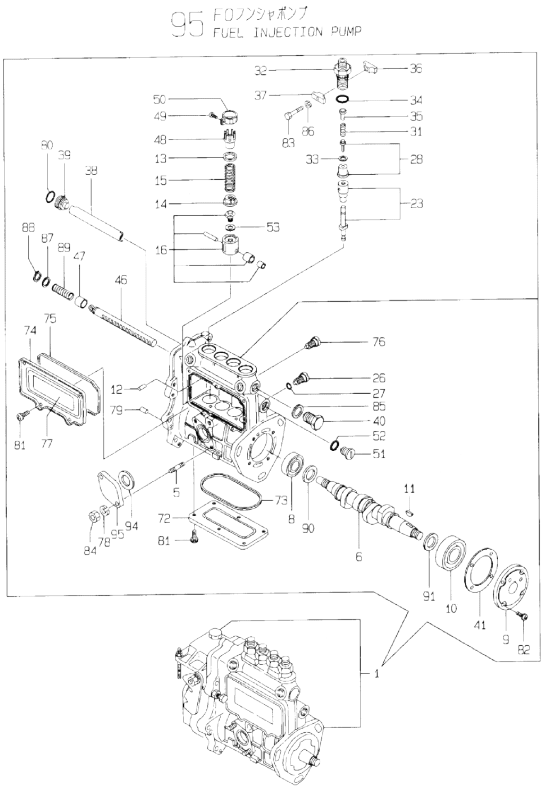

Remarks
(1) GOVERNOR ASSY(FIG.NO.96)IS INCORPORATED IN THIS FUEL INJECTION PUMP ASSY(REF.NO.1).

(A)=4TNE84T-GH (D)=
(B)= (E)=
(C)= (F)=

No.	Lev.	Parts No.	Description	Q'ty (A)	(B)	(C)	(D)	(E)	(F)	I	R
1	1	729615-51400	PUMP ASSY, INJECTION	1							1
5	2	129155-51020	STUD	2							
6	2	129470-51040	CAMSHAFT	1							
8	2	129155-51050	BEARING, 17BM001D	1							
9	2	129155-51060	SUPPORT, CAMSHAFT	1							
10	2	24101-063034	BEARING, BALL 6303	1							
11	2	122710-51090	KEY	1							
12	2	129155-51140	PIN	4							
13	2	174307-51170	RETAINER, SPRING A	4							
14	2	129155-51180	RETAINER, SPRING	4							
15	2	124950-51190	SPRING, PLUNGER	4							
16	2	129155-51200	TAPPET ASSY	4							
23	2	129403-51200	PLUNGER ASSY	4							
26	2	129155-51270	STOPPER, TAPPET	4							
27	2	129155-51280	O-RING, S6	4							
28	2	105300-51300	VALVE ASSY, DELIVERY	4							
31	2	129155-51320	SPRING, DELIVERY	4							
32	2	129155-51340	RETAINER	4							
33	2	124550-51350	GASKET, DELIVERY	4							
34	2	124550-51370	O-RING	4							
35	2	129155-51370	STOPPER, VALVE	4							
36	2	129155-51380	STOPPER	2							
37	2	129155-51390	STOPPER	2							
38	2	129555-51400	DEFLECTOR	1							
39	2	129155-51410	BOLT	1							
40	2	129155-51420	PLUG, M16	1							
41	2	129155-51450	SHIM SET, ADJUSTING	1							
46	2	129555-51500	RACK, CONTROL	1							
47	2	129155-51521	BUSH, RACK	1							
48	2	129155-51550	PINION, CONTROL	4							
49	2	122117-51560	SCREW	4							
50	2	174307-51560	PINION	4							
51	2	129155-51570	PLUG, M12	1							
52	2	129155-51580	O-RING	1							
53	2	129155-51600	SHIM SET, ADJUSTING	4							
72	2	129555-51700	COVER	1							
73	2	129555-51710	GASKET	1							
74	2	129555-51750	COVER	1							
75	2	129555-51760	GASKET	1							
76	2	129155-51790	STOOPER, RACK	1							
77	2	129156-51910	LABEL, CAUTION	1							
78	2	22217-060000	WASHER, SPRING 6	2							
79	2	22351-050010	PIN, SPRING 5.0X10	2							
80	2	24341-000160	O-RING, 1AS16.0	1							
81	2	26022-050102	SCREW, M5X10	11							
82	2	26022-060162	SCREW, M6X16	4							
83	2	26116-050302	BOLT, M5X 30 PLATED	2							
84	2	26716-060002	NUT, M6	2							
85	2	22190-160002	WASHER, SEAL 16	1							
86	2	22217-050000	WASHER, SPRING 5	2							
87	2	129155-51530	SPACER	1							

N:Old ←Yes/No→ New. Q:Old ←No/Yes→ New. R:Old ←Yes/Yes→ New. S:Old ←No/No→ New. W:Add. Z:Discontinued. F:Interchangeable by set. K:Q'ty Change

++ CONTINUE ++

Copyright (C) YANMAR CO., LTD. All RightsReserved.

Fig.95. FUEL INJECTION PUMP

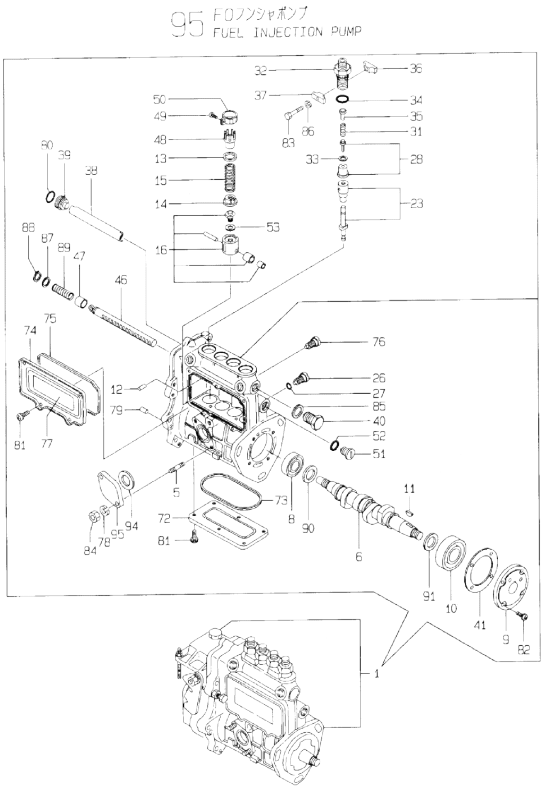

Remarks
(1) GOVERNOR ASSY(FIG.NO.96)IS INCORPORATED IN THIS FUEL INJECTION PUMP ASSY(REF.NO.1).

(A)=4TNE84T-GH (D)=
(B)= (E)=
(C)= (F)=

No.	Lev.	Parts No.	Description	Q'ty (A)	(B)	(C)	(D)	(E)	(F)	I	R
88	2	129155-51540	CIRCLIP	1							
89	2	129155-51591	SPRING, RACK	1							
90	2	129155-51930	SPACER, T=3.25	1							
91	2	129155-51940	SPACER, T=1.5	1							
94	2	129155-52050	GASKET	1							
95	2	129100-52200	COVER	1							

N:Old ←Yes/No→ New. Q:Old ←No/Yes→ New. R:Old ←Yes/Yes→ New. S:Old ←No/No→ New. W:Add. Z:Discontinued. F:Interchangeable by set. K:Q'ty Change

Copyright (C) YANMAR CO., LTD. All RightsReserved.

Fig.96. GOVERNOR

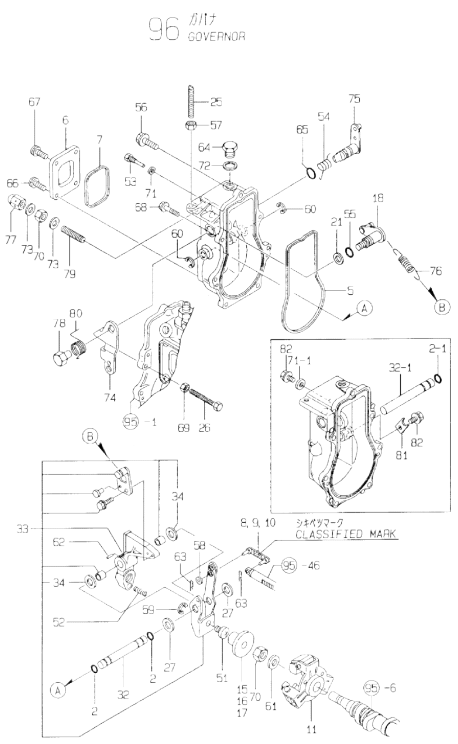

Remarks
(1) SELECTIVE PARTS;CERTAIN THE CLASSIFICATION MARK,THEN PLACE YOUR ORDER.(REF.TO.ILLUSTRATION).
(2) SELECTIVE PART.
* THIS FIGURE(GOVERNOR ASSY)IS INCORPORATED IN THE FUEL INJECTION PUMP ASSY(FIG.95).

(A)=4TNE84T-GH (D)=
(B)= (E)=
(C)= (F)=

No.	Lev.	Parts No.	Description	Q'ty (A)	(B)	(C)	(D)	(E)	(F)	I	R
2	2	129155-51280	O-RING, S6	2							
2-1	2	129155-51280	O-RING, S6	1						K	
	(A=E04569)										
5	2	129155-61050	GASKET	1							
6	2	129155-61060	COVER, GOVERNOR CASE	1							
7	2	129155-61070	GASKET	1							
8	2	129155-61120	LINK, L=30 MARK 0	1							1
9	2	129155-61130	LINK, L=31 MARK 1	1							1
10	2	129155-61140	LINK, L=30.5 MARK 05	1							1
11	2	129155-61201	WEIGHT ASSY,GOVERNOR	1							
15	2	129155-61341	SLEEVE	1							2
16	2	129155-61350	SLEEVE, L=24.9	1							2
17	2	129155-61360	SLEEVE, L=25.2	1							2
18	2	129100-61400	SHAFT ASSY	1							
21	2	129155-61430	SPACER	1							
25	2	129155-61450	BOLT, LIMITER	1							
26	2	129155-61460	BOLT, IDLE	1							
27	2	129155-61480	SPACER ASSY	2							
32	2	129155-61490	SHAFT	1							
32-1	2	129155-61380	SHAFT	1						S	
	(A=E04569)										
33	2	129100-61501	LEVER ASSY, GOVERNOR	1							
34	3	174307-51700	SHIM SET	2							
51	2	129155-61540	SHIFTER	1							
52	2	129500-61650	SPRING, FUEL CONTROL	1							
53	2	129155-61810	PIN	1							
54	2	129100-61821	SPRING, RETURN	1							
55	2	129155-61830	O-RING, S10	1							
56	2	129155-61950	BOLT	1							
57	2	124550-66370	NUT, M6	1							
58	2	22117-040000	WASHER, 4	1							
59	2	22272-000040	RING, E- 4	1							
60	2	22272-000060	RING, E- 6	2						Z	
	(A=E04569)										
61	2	22287-120000	WASHER, 12	1							
62	2	22351-030016	PIN, SPRING 3.0X16	1							
63	2	22372-040000	PIN, SNAP 4	2							
64	2	23887-100002	PLUG, 10	1							
65	2	24311-240100	O-RING, 1AP10A	1							
66	2	26022-050102	SCREW, M5X10	2							
67	2	26023-050102	SCREW, M5X10	2							
68	2	26106-060202	BOLT, M6X 20 PLATED	6							
69	2	26756-060002	NUT, LOCK M6	1							
70	2	26776-120002	NUT, LOCK M12	2							
71	2	22190-060002	WASHER, SEAL 6	1							
71-1	2	22190-060002	WASHER, SEAL 6	2						K	
	(A=E04569)										
72	2	22190-100002	WASHER, SEAL 10	1							
73	2	22190-120002	WASHER, SEAL 12	2							
74	2	171488-61440	LEVER, CONTROL	1							
75	2	129155-61802	LEVER, STOP	1							

N:Old ←Yes/No→ New. Q:Old ←No/Yes→ New. R:Old ←Yes/Yes→ New. S:Old ←No/No→ New. W:Add. Z:Discontinued. F:Interchangeable by set. K:Q'ty Change

++ CONTINUE ++

Copyright (C) YANMAR CO., LTD. All RightsReserved.

Fig.96. GOVERNOR

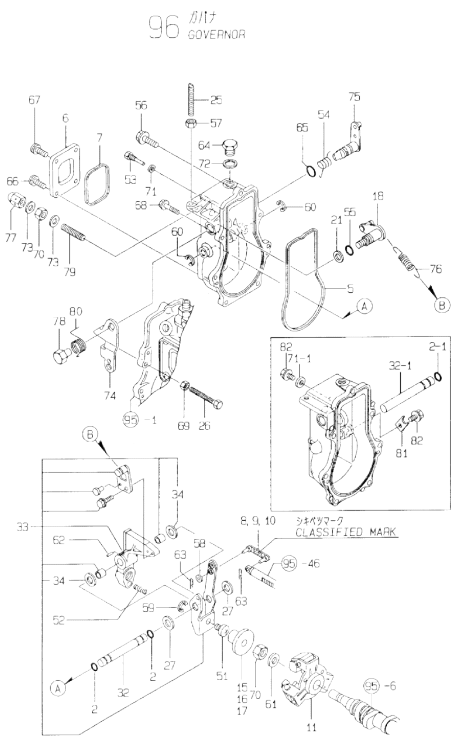

Remarks
(1) SELECTIVE PARTS;CERTAIN THE CLASSIFICATION MARK,THEN PLACE YOUR ORDER.(REF.TO.ILLUSTRATION).
(2) SELECTIVE PART.
* THIS FIGURE(GOVERNOR ASSY)IS INCORPORATED IN THE FUEL INJECTION PUMP ASSY(FIG.95).

(A)=4TNE84T-GH (D)=
(B)= (E)=
(C)= (F)=

No.	Lev.	Parts No.	Description	Q'ty (A)	(B)	(C)	(D)	(E)	(F)	I	R
76	2	171335-61710	SPRING, GOVERNOR	1							
77	2	26687-120002	NUT, CAP M12	1							
78	2	129255-61410	NUT, LOCK	1							
79	2	129155-61470	BOLT, CONTROL	1							
80	2	129255-61420	SPRING, RETURN	1							
81	2	119660-61901	RETAINER, SHAFT	1							W
	(A=E04569)										
82	2	26106-060102	BOLT, M6X 10 PLATED	2							W
	(A=E04569)										

N:Old ←Yes/No→ New. Q:Old ←No/Yes→ New. R:Old ←Yes/Yes→ New. S:Old ←No/No→ New. W:Add. Z:Discontinued. F:Interchangeable by set. K:Q'ty Change

Copyright (C) YANMAR CO., LTD. All RightsReserved.

Fig.97. FUEL FEED PUMP

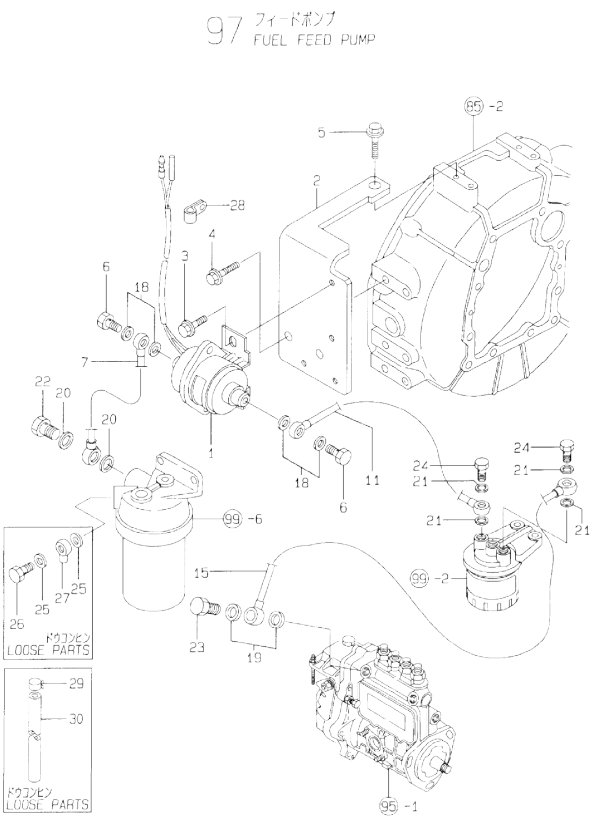

(A)=4TNE84T-GH (D)=
(B)= (E)=
(C)= (F)=

No.	Lev.	Parts No.	Description	Q'ty (A)	(B)	(C)	(D)	(E)	(F)	I	R
1	1	124790-52201	PUMP ASSY, FUEL FEED	1							
2	1	171375-52501	BRACKET, PUMP	1							
3	1	26106-060102	BOLT, M6X 10 PLATED	2							
4	1	26106-080162	BOLT, M8X 16 PLATED	2							
5	1	26106-100162	BOLT, M10X 16 PLATED	1							
6	1	105582-59150	BOLT, PIPE JOINT	2							
7	1	171375-59500	PIPE ASSY, FUEL	1							
11	1	129411-59510	PIPE ASSY, FUEL	1							
15	1	129411-59521	PIPE ASSY, FUEL	1							
18	1	23414-080012	GASKET, 8X1.0	4							
19	1	23414-120000	GASKET, 12X1.0	2							
20	1	23414-120000	GASKET, 12X1.0	2							
21	1	23414-120000	GASKET, 12X1.0	4							
22	1	23857-060000	BOLT, JOINT 6	1							
23	1	23857-060000	BOLT, JOINT 6	1							
24	1	23857-060000	BOLT, JOINT 6	2							
25	1	23414-120000	GASKET, 12X1.0	2							
26	1	23857-060000	BOLT, JOINT 6	1							
27	1	103854-39540	JOINT, PIPE	1							
28	1	194440-51620	CLAMP	1							
29	1	124766-59050	CLIP, HOSE 12	4							
30	1	121137-59080	PIPE, FUEL D12X1150	1							

N:Old ←Yes/No→ New. Q:Old ←No/Yes→ New, R:Old ←Yes/Yes→ New, S:Old ←No/No→ New, W:Add, Z:Discontinued, F:Interchangeable by set, K:Q'ty Change

Copyright (C) YANMAR CO., LTD. All RightsReserved.

Fig.98. FUEL INJECTION VALVE

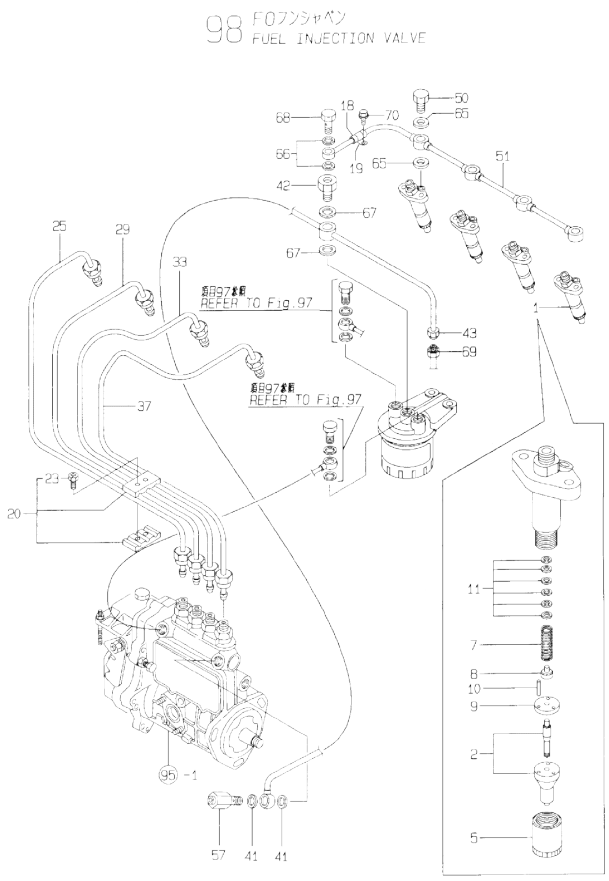

(A)=4TNE84T-GH
(B)=
(C)=
(D)=
(E)=
(F)=

No.	Lev.	Parts No.	Description	Q'ty (A)	(B)	(C)	(D)	(E)	(F)	I	R
1	1	729103-53300	VALVE ASSY,INJECTION	4							
2	2	129103-53050	VALVE ASSY,INJECTION	4							
5	2	114250-53080	NUT, NOZZLE D16.95	4							
7	2	114250-53120	SPRING, NOZZLE	4							
8	2	114250-53130	SEAT, SPRING	4							
9	2	114250-53140	PLATE	4							
10	2	114250-53210	PIN	8							
11	2	114250-53400	SHIM SET	4							
18	1	123658-39320	HOSE, RUBBER	1							
19	1	23297-080081	CLAMP, A8X 8	1							
20	1	129150-59120	RETAINER, PIPE	2							
23	2	129150-59131	BOLT, M4X14	4							
25	1	129400-59810	PIPE ASSY, INJECTION	1							
29	1	129400-59820	PIPE ASSY, INJECTION	1							
33	1	129400-59830	PIPE ASSY, INJECTION	1							
37	1	129400-59840	PIPE ASSY, INJECTION	1							
41	1	104200-59170	GASKET, 12	2							
42	1	129495-59300	BOLT, PIPE JOINT	1							
43	1	129411-59530	PIPE ASSY, FUEL	1							
50	1	129491-59540	BOLT, PIPE JOINT M6	4							
51	1	129411-59552	PIPE ASSY, RETURN	1							
57	1	129100-59951	VALVE ASSY, CHECK	1							
65	1	23414-060000	GASKET, 6X1.0	8							
66	1	23414-080012	GASKET, 8X1.0	2							
67	1	23414-140000	GASKET, 14X1.0	2							
68	1	23851-030000	JOINT BOLT 3	1							
69	1	43551-001451	UNION 8(M)	1							
70	1	26106-060122	BOLT, M6X 12 PLATED	1							

N:Old ←Yes/No→ New. Q:Old ←No/Yes→ New. R:Old ←Yes/Yes→ New. S:Old ←No/No→ New. W:Add. Z:Discontinued. F:Interchangeable by set. K:Q'ty Change

Copyright (C) YANMAR CO., LTD. All RightsReserved.

Fig.99. FUEL FILTER

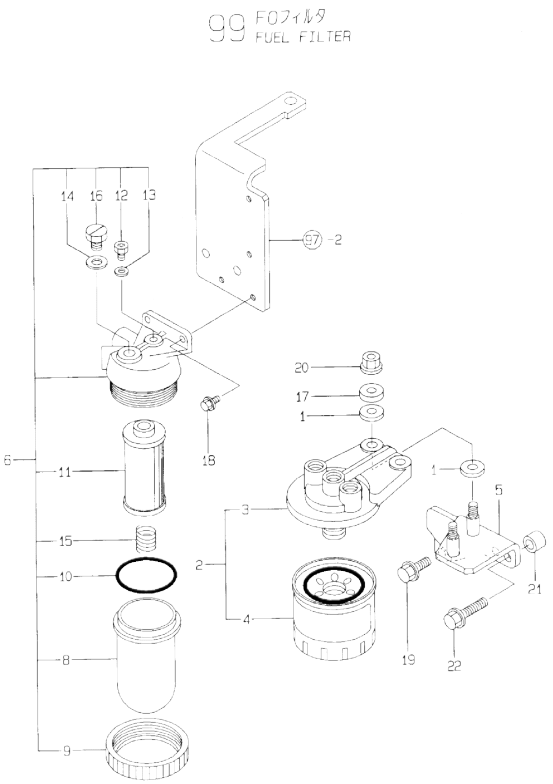

(A)=4TNE84T-GH
(B)=
(C)=
(D)=
(E)=
(F)=

No.	Lev.	Parts No.	Description	Q'ty (A)	(B)	(C)	(D)	(E)	(F)	I	R
1	1	160610-55460	INSULATOR	4							
2	1	129470-55601	FILTER ASSY, FUEL	1							
3	2	129470-55610	BODY, STRAINER	1							
4	2	129470-55701	STRAINER ASSY, FUEL	1							
5	1	171375-55612	BRACKET, STRAINER	1							
6	1	171081-55900	FILTER ASSY, PRE	1							
8	2	121370-55730	CUP, STRAINER	1							
9	2	110250-55610	RING, RETAINING	1							
10	2	103854-32050	O-RING	1							
11	2	171081-55910	SCREEN	1							
12	2	101720-55750	PLUG, 6	1							
13	2	23418-060000	GASKET, 6X1.0	1							
14	2	23414-080012	GASKET, 8X1.0	1							
15	2	121257-55720	SPRING	1							
16	2	135210-51900	PLUG	1							
17	1	121236-77340	SPACER	2							
18	1	26106-060142	BOLT, M6X 14 PLATED	2							
19	1	26106-080162	BOLT, M8X 16 PLATED	1							
20	1	26366-080002	NUT, M8	2							
21	1	129411-55690	SPACER	1							
22	1	26106-080302	BOLT, M8X 30 PLATED	1							

N:Old ←Yes/No→ New. Q:Old ←No/Yes→ New. R:Old ←Yes/Yes→ New. S:Old ←No/No→ New. W:Add. Z:Discontinued. F:Interchangeable by set. K:Q'ty Change

Copyright (C) YANMAR CO., LTD. All RightsReserved.

Fig.100. ENGINE STOP DEVICE

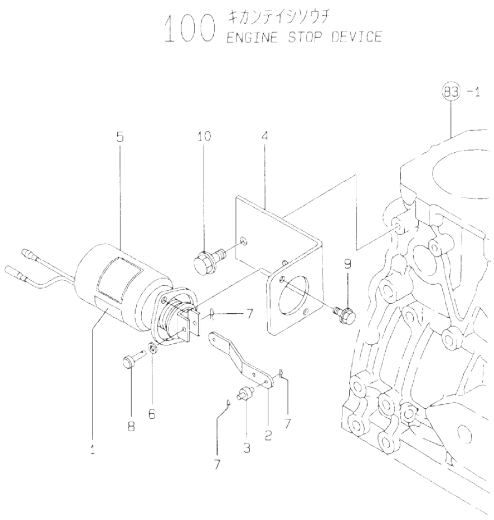

(A)=4TNE84T-GH (D)=
(B)= (E)=
(C)= (F)=

No.	Lev.	Parts No.	Description	Q'ty (A)	(B)	(C)	(D)	(E)	(F)	I	R
1	1	171010-65100	LABEL	1							
2	1	171335-65110	LINK, SOLENOID	1							
3	1	171335-65120	PIN	1							
4	1	129410-65130	BRACKET, SOLENOID	1							
5	1	171335-77951	SOLENOID, MAGNETIC	1							
6	1	22117-050000	WASHER, 5	1							
7	1	22360-050000	SNAP PIN 5	3							
8	1	22487-050160	PIN, H 5X 16	1							
9	1	26106-060122	BOLT, M6X 12 PLATED	2							
10	1	26106-080142	BOLT, M8X 14 PLATED	2							

N:Old ◄Yes/No► New. Q:Old ◄No/Yes► New, R:Old ◄Yes/Yes► New, S:Old ◄No/No► New, W:Add, Z:Discontinued, F:Interchangeable by set, K:Q'ty Change

Copyright (C) YANMAR CO., LTD. All RightsReserved.

Fig.101. STARTING MOTOR

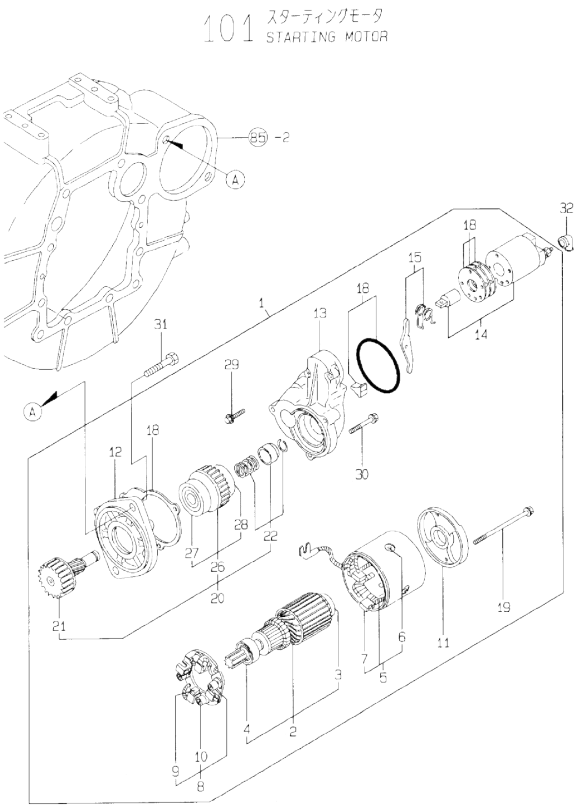

(A)=4TNE84T-GH
(B)=
(C)=
(D)=
(E)=
(F)=

No.	Lev.	Parts No.	Description	Q'ty (A)	(B)	(C)	(D)	(E)	(F)	I	R
1	1	129400-77011	STARTER, S13-94A	1							
2	2	129400-77400	ARMATURE ASSY	1							
3	3	171008-77410	BEARING	1							
4	3	171008-77420	BEARING	1							
5	2	129400-77440	COIL ASSY, FIELD	1							
6	3	171008-77450	SCREW	4							
7	3	129400-77460	BRUSH (+)	2							
8	2	129400-77470	HOLDER ASSY, BRUSH	1							
9	3	129400-77480	BRUSH (-)	2							
10	3	129400-77490	SPRING	4							
11	2	129400-77510	COVER, REAR	1							
12	2	171008-77510	CASE, GEAR	1							
13	2	129400-77520	HOUSING	1							
14	2	129400-77530	SWITCH ASSY,MAGNETIC	1							
15	2	171008-77540	LEVER SET	1							
18	2	129400-77570	COVER KIT, DUST	1							
19	2	129400-77640	BOLT, THROUGH	2							
20	2	171008-77650	PINION ASSY	1							
21	3	171008-77660	SHAFT	1							
22	3	171008-77670	STOPPER SET	1							
26	3	171008-77720	CLUTCH ASSY	1							
27	4	171008-77730	BEARING, BALL	1							
28	4	171008-77740	BEARING	1							
29	2	26106-060322	BOLT, M6X 32 PLATED	2							
30	2	26106-060402	BOLT, M6X 40 PLATED	3							
31	1	26116-120252	BOLT, M12X 25 PLATED	2							
32	1	124550-77030	COVER, TERMINAL	1							

N:Old ←Yes/No→ New. Q:Old ←No/Yes→ New, R:Old ←Yes/Yes→ New, S:Old ←No/No→ New, W:Add, Z:Discontinued, F:Interchangeable by set, K:Q'ty Change

Copyright (C) YANMAR CO., LTD. All RightsReserved.

Fig.102. TENSION PULLEY

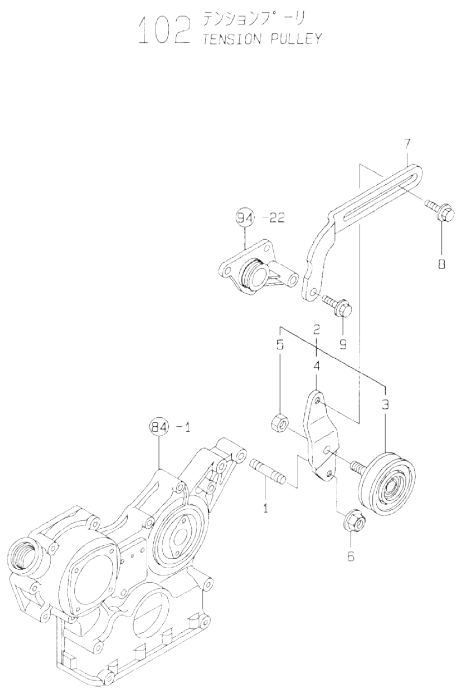

(A)=4TNE84T-GH
(B)=
(C)=
(D)=
(E)=
(F)=

No.	Lev.	Parts No.	Description	Q'ty (A)	(B)	(C)	(D)	(E)	(F)	I	R
1	1	121450-01570	STUD	1							
2	1	171375-44300	PULLEY ASSY, TENSION	1							
3	2	171011-44301	PULLEY, TENSION	1							
4	2	171375-44320	BRACKET, PULLEY	1							
5	2	26706-100002	NUT, M10	1							
6	1	26366-100002	NUT, M10	1							
7	1	129100-77330	ADJUSTER	1							
8	1	26014-080252	BOLT, M8X 25	1							
9	1	26106-080502	BOLT, M8X 50 PLATED	1							

N:Old ◄Yes/No► New. Q:Old ◄No/Yes► New. R:Old ◄Yes/Yes► New. S:Old ◄No/No► New. W:Add. Z:Discontinued. F:Interchangeable by set. K:Q'ty Change

Copyright (C) YANMAR CO., LTD. All RightsReserved.

Fig.103. ELECTRIC PARTS

(A)=4TNE84T-GH
(B)=
(C)=
(D)=
(E)=
(F)=

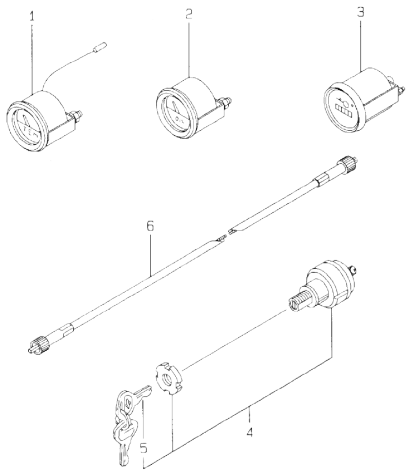

No.	Lev.	Parts No.	Description	Q'ty (A)	(B)	(C)	(D)	(E)	(F)	I	R
1	1	171010-77850	THERMOSTAT	2							
2	1	171090-91010	GAUGE	1							
3	1	171014-91101	TACHOMETER	1							
4	1	121400-91251	SWITCH, STARTER	1							
5	2	121400-91271	KEY, SWITCH	1							
6	1	121400-91140	SHAFT	1							

N:Old ◄Yes/No► New. Q:Old ◄No/Yes► New, R:Old ◄Yes/Yes► New, S:Old ◄No/No► New, W:Add, Z:Discontinued, F:Interchangeable by set, K:Q'ty Change

Copyright (C) YANMAR CO., LTD. All RightsReserved.

Fig.104. GASKET SET

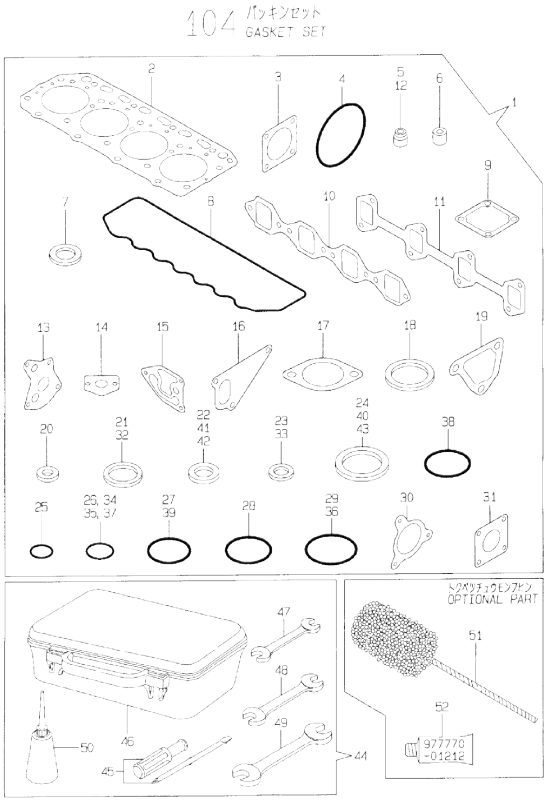

Remarks
(1) OPTIONAL PART.

(A)=4TNE84T-GH (D)=
(B)= (E)=
(C)= (F)=

No.	Lev.	Parts No.	Description	Q'ty (A)	(B)	(C)	(D)	(E)	(F)	I	R
1	1	729408-92660	GASKET SET	1							1
2	2	129408-01330	GASKET, HEAD	1							
3	2	124240-01883	GASKET	1							
4	2	121850-51960	O-RING	1							
5	2	124460-11340	SEAL, VALVE STEM	4							
6	2	119625-11871	PROTECTOR, NOZZLE	4							
7	2	119625-11880	SEAT, NOZZLE	4							
8	2	129550-11310	GASKET, BONNET	1							
9	2	129150-77511	GASKET	1							
10	2	129550-12111	GASKET, MANIFOLD	1							
11	2	129550-13110	GASKET	1							
12	2	121400-11340	SEAL, VALVE STEM	4							
13	2	129150-32020	GASKET, PUMP	1							
14	2	129150-35041	GASKET	1							
15	2	129103-35122	GASKET	1							
16	2	129100-42020	GASKET, WATER PUMP	1							
17	2	129795-49551	GASKET	1							
18	2	129150-49811	GASKET, THERMOSTAT	1							
19	2	129100-49840	GASKET	1							
20	2	129155-52050	GASKET	1							
21	2	104200-59170	GASKET, 12	2							
22	2	22190-080002	WASHER, SEAL 6	7							
23	2	23414-100000	GASKET, 10X1.0	4							
24	2	23414-170000	GASKET, 17X1.0	1							
25	2	24311-000120	O-RING, 1AP12.0	3							
26	2	24311-000160	O-RING, 1AP16.0	2							
27	2	24311-000320	O-RING, 1AP32.0	2							
28	2	24341-000240	O-RING, 1AS24.0	1							
29	2	24341-000500	O-RING, 1AS50.0	1							
30	2	129472-18090	GASKET	1							
31	2	129792-13521	GASKET	1							
32	2	23414-120000	GASKET, 12X1.0	10							
33	2	129150-49360	GASKET	1							
33-1	2	129150-49360	GASKET	2						K	
	(A=E04856)										
34	2	24311-000200	O-RING, 1AP20.0	1							
35	2	24311-000210	O-RING, 1AP21.0	1							
36	2	24321-000550	O-RING, 1AG55.0	1							
37	2	24314-000160	O-RING, 4CP16.0	1							
38	2	24341-000250	O-RING, 1AS25.0	1							
39	2	24321-000300	O-RING, 1AG30.0	1							
40	2	124465-44950	GASKET, 16	2							
40-1	2	124465-44950	GASKET, 16	1						K	
	(A=E04856)										
41	2	23414-080012	GASKET, 8X1.0	6							
42	2	23414-060000	GASKET, 6X1.0	8							
43	2	23414-140000	GASKET, 14X1.0	2							
44	1	721400-92102	BOX ASSY, TOOL	1							
45	2	104200-92350	DRIVER, SCREW	1							
46	2	104200-92600	BOX, TOOL	1							
47	2	28110-100120	SPANNER, 10X12	1							

N:Old ←Yes/No→ New. Q:Old ←No/Yes→ New. R:Old ←Yes/Yes→ New. S:Old ←No/No→ New. W:Add. Z:Discontinued. F:Interchangeable by set. K:Q'ty Change

++ CONTINUE ++

Copyright (C) YANMAR CO., LTD. All RightsReserved.

Fig.104. GASKET SET

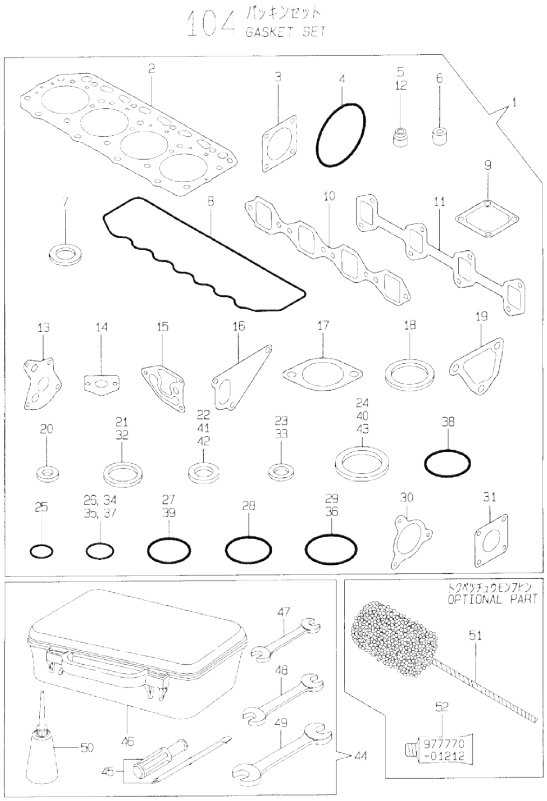

(A)=4TNE84T-GH
(B)=
(C)=
(D)=
(E)=
(F)=

No.	Lev.	Parts No.	Description	Q'ty (A)	(B)	(C)	(D)	(E)	(F)	I	R
48	2	28110-140170	SPANNER, 14X17	1							
49	2	28110-190220	SPANNER, 19X22	1							
50	2	28210-000140	OILER	1							
51	1	129400-92420	HONE	1							1
52	1	977770-01212	GASKET, LIQUID	1							1

Remarks
(1) OPTIONAL PART.

N:Old ←Yes/No→ New. Q:Old ←No/Yes→ New. R:Old ←Yes/Yes→ New. S:Old ←No/No→ New. W:Add. Z:Discontinued. F:Interchangeable by set. K:Q'ty Change

Copyright (C) YANMAR CO., LTD. All RightsReserved.

Parts No. Index

Parts No.	Fig. No.	Ref. No.
101720-55750	15	7
		18
	35	12
	55	12
	77	12
	99	12
103854-32050	15	16
	35	10
	55	10
	77	10
	99	10
103854-39540	13	28
	33	27
	53	27
	75	27
	97	27
104200-59170	13	18
	20	24
	34	36
	40	20
	54	36
	60	37
	76	36
	82	40
	98	41
	104	21
104200-92350	20	32
	40	36
	60	39
	82	44
	104	45
104200-92600	20	33
	40	37
	60	40
	82	45
	104	46
104211-11180	24	24
104211-11370	24	28
104500-55710	15	4
105010-11230	4	36
		40
105300-51300	51	27
	73	27
	95	28
105546-51330	11	25
105582-59150	13	6
	33	6
	53	6
	75	6
	97	6

Parts No.	Fig. No.	Ref. No.
106500-44870	16	8
110250-55610	15	3
		15
	35	9
	55	9
	77	9
	99	9
114250-11120	4	19
114250-11180	4	20
114250-53080	34	5
	54	5
	76	5
	98	5
114250-53120	34	8
	54	8
	76	8
	98	7
114250-53130	14	9
	34	9
	54	9
	76	9
	98	8
114250-53140	34	10
	54	10
	76	10
	98	9
114250-53210	34	11
	54	11
	76	11
	98	10
114250-53400	14	11
	34	12
	54	12
	76	12
	98	11
119131-18320	88	6 -1
119209-35030	9	16 -1
	20	28
119209-59810	14	23
119209-59820	14	27
119209-59830	14	31
119215-52500	13	2
119215-59700	13	11
119215-59800	13	15
119225-14200	7	18
119225-35300	9	22
119225-42320	10	10
119225-51100	11	4
119225-51300	11	22
119226-07900	44	63

Parts No.	Fig. No.	Ref. No.
119226-07900	64	63
119248-01770	3	13
119248-49530	10	16
119248-59550	14	35
119248-59560	14	41
119248-66510	12	61
119248-66900	16	9
119256-42290	10	14
119256-44760	50	19
119260-01200	1	23
119260-01490	2	14
119260-01510	2	17
119260-01590	2	1
119260-02020	1	6
119260-02410	1	16
119260-03020	4	50
119260-03031	4	51
	20	11
119260-07900	4	4
119260-11100	4	17
119260-11110	4	18
119260-11200	4	27
119260-11240	4	28
119260-11260	4	31
119260-11270	4	33
119260-11280	4	34
119260-11310	4	54
	20	12
119260-11340	4	23
	20	8
119260-11370	4	24
119260-11800	4	11
119260-12111	5	18
	20	13
119260-13100	6	2
119260-13110	6	3
	20	14
119260-14100	7	7
119260-14200	7	1
119260-14400	7	2
119260-14580	7	3
119260-21200	8	5
119260-21650	8	8
119260-25100	7	11
119260-32000	9	1
119260-35081	9	15
119260-42001	10	1
119260-42002	10	1 -1
119260-42020	10	12
	20	18

Parts No.	Fig. No.	Ref. No.
119260-49800	10	17
119260-66010	12	58
119260-66720	12	70
119265-01340	1	24
	20	2
119265-01341	1	24 -1
	20	2 -1
119265-11260	4	32
119265-11700	4	7
119265-21700	8	1
119265-22090	8	16
119265-22300	8	24
119265-22500	8	18
119265-23100	8	26
119265-23200	8	31
119265-44740	10	20
	30	19
	50	18
119266-02410	1	16 -1
119270-61200	12	13
119288-12050	5	1
119288-12100	5	17
119288-12590	5	9
119305-35170	9	21
119454-01721	3	11
119462-12550	5	8
119600-01600	3	2
119600-11450	4	25
	20	9
119600-11460	4	26
	20	10
119600-21580	8	12
119600-61100	12	3
119600-61200	12	4
119600-61500	12	27
119600-61541	12	42
119600-61650	12	43
119600-61900	12	47
119600-66681	12	56
119600-66840	12	96
119620-01620	3	6
119620-01750	3	4
	23	3
	43	3
	63	3
	85	3
119620-01800	2	4
119620-02020	21	13
119620-02450	7	4
119620-11350	4	44

Parts No. Index

Parts No.	Fig. No.	Ref. No.
119620-11390	4	55
119620-21941	8	10
119620-23910	8	30
119620-25912	7	13
119620-42350	10	15
119620-51170	11	7
119620-51180	11	8
119620-51190	11	9
119620-51250	11	10
119620-51340	11	26
119620-51350	11	27
119620-51370	11	28
119620-51450	11	29
119620-51461	11	30
119620-51510	11	32
119620-51650	11	34
119620-51660	11	35
119620-51670	11	36
119620-51680	11	37
119620-51700	11	38
119620-53000	14	3
119620-53080	14	6
119620-53120	14	8
119620-53140	14	10
119620-59700	14	46
119620-77011	17	1
119620-77820	4	61
119621-11950	1	26
119621-11960	1	27
	20	15
119621-21680	8	9
119621-66051	12	59
119621-66091	12	49
119623-01950	2	23
119625-11871	24	42
	40	6
	44	45
	60	6
	64	45
	82	6
	86	46
	104	6
119625-11880	24	43
	40	7
	44	46
	60	7
	64	46
	82	7
	86	47
	104	7

Parts No.	Fig. No.	Ref. No.
119625-11900	24	44
	44	47
	64	47
	86	48
119629-49080	10	34
	30	43
	50	42
	72	43
	94	43
119629-66510	12	64
119640-01640	23	9
119640-12580	5	11
119645-49020	10	30
119660-01551	2	20
119660-01562	2	21
	20	6
119660-01570	2	22
119660-01640	3	7
119660-01821	7	17
119660-01911	2	5
119660-25022	7	9
119660-25052	7	10
119660-32020	9	11
	20	16
119660-51500	11	31
119660-51530	11	33
119660-61052	12	17
119660-61060	12	1
119660-61071	12	2
119660-61121	12	10
119660-61140	12	11
119660-61150	12	12
119660-61300	12	8
119660-61341	12	9
119660-61460	12	18
119660-61491	12	26
119660-61901	12	48
	32	81
	52	81
	74	81
	96	81
119660-77330	18	5
119688-12500	5	3
119688-12540	5	5
119688-49010	10	29
119802-13650	88	3 -1
119802-13670	88	4 -1
119802-13820	88	5 -2
119810-01200	21	22
119810-01730	23	6

Parts No.	Fig. No.	Ref. No.
119810-01770	23	8
119810-01780	23	17
119810-02800	21	14
119810-02870	21	24
119810-02930	21	17
119810-02940	21	27
119810-11080	24	12
119810-11090	24	13
119810-11100	24	21
119810-11120	24	22
119810-11130	24	23
119810-11240	24	31
119810-12100	25	1
119810-12111	25	2
	40	10
119810-13100	26	2
119810-13110	26	3
	40	11
119810-14400	27	2
119810-14580	27	3
119810-23200	28	30
119810-23600	28	31
119810-23610	28	33
119810-23910	28	29
119810-35300	29	19
119810-39200	29	32
119810-39650	29	50
119810-42001	30	1
119810-51040	31	6
	51	6
	73	6
119810-77330	38	7
119811-59810	34	24
119811-59820	34	28
119811-59830	34	32
119813-21000	28	1
119813-22300	28	23
119818-01330	21	23
	40	2
119818-22090	28	17
119818-22510	28	19
119818-22900	28	35
119818-22950	28	37
119831-42290	50	16
119860-12510	5	4
119860-12550	5	6
119860-12560	5	7
119865-11200	24	30
119865-11310	24	55
	40	8

Parts No.	Fig. No.	Ref. No.
119865-21600	8	15
	28	16
	48	16
	69	16
	91	16
119915-49010	30	37 -1
119932-34800	29	16
120130-11860	44	12
	64	12
	86	15
121111-21501	8	11
	28	12
	48	12
	69	12
	91	12
121120-01620	3	3
121120-77930	17	15
121137-59080	75	30
	97	30
121236-77340	55	17
	77	17
	99	17
121250-44901	10	23
	30	27
	50	31
	72	31
	94	31
121252-39150	71	3
	93	2
121257-55720	15	22
	35	15
	55	15
	77	15
	99	15
121370-55730	15	6
		14
	35	8
	55	8
	77	8
	99	8
121400-01640	3	14
121400-11340	44	28
	60	12
	64	28
	82	12
	86	28
	104	12
121400-91140	19	6
	39	6
	59	6

Parts No. Index

Parts No.	Fig. No.	Ref. No.
121400-91140	81	6
	103	6
121400-91251	19	4
	39	4
	59	4
	81	4
	103	4
121400-91271	19	5
	39	5
	59	5
	81	5
	103	5
121450-01560	2	18
	22	6
	42	6
	62	6
	84	6
121450-01570	38	1
	58	1
	80	1
	102	1
121470-44900	3	19
121520-01851	2	36
	20	23
121520-01860	2	37
121520-34810	9	13
	29	17
	49	17
	70	22
	92	23
121521-12400	5	2
121550-23200	48	30
	69	30
	91	30
121550-49111	30	26
	50	30
	72	30
	83	28
121575-66830	12	95
121575-77900	16	1
121575-77960	16	3
121575-77970	16	4
121575-77980	16	5
121575-77990	16	6
121850-11860	24	16
	50	1
121850-21680	28	11
	48	11
	69	11
	91	11

Parts No.	Fig. No.	Ref. No.
121850-51960	22	13
	40	4
	42	13
	60	4
	62	13
	82	4
	84	12
	104	4
122117-51560	31	50
	51	50
	73	50
	95	49
122710-51090	31	10
	51	10
	73	10
	95	11
123658-39320	98	18
123682-44210	10	28
	30	36
	50	36
	94	36
124060-01050	1	5
124060-11800	24	14
124070-13300	93	17
124085-02220	3	9
124097-77900	1	29 -1
	21	6 -1
	41	6 -1
	61	6 -1
	83	6 -1
124101-49530	30	22
124160-01751	2	12
	4	49
	22	7
	24	61
	42	7
	44	64
	62	7
	64	64
	84	7
	86	52
124160-01910	21	5
	41	5
	61	5
	83	5
		27
124160-11340	24	26
	40	5
124160-11360	4	47
	24	59

Parts No.	Fig. No.	Ref. No.
124160-11360	44	61
	64	61
	86	62
124160-39140	29	31
	49	28
	71	2
	93	1
124160-39450	9	18
	29	36
	49	36
	71	1
	93	3
124195-77770	37	47
	57	54
	79	54
124223-39900	71	10
	93	11
124240-01871	22	8
	42	8
	62	8
	84	8
124240-01883	22	9
	40	3
	42	9
	60	3
	62	9
	82	3
	84	9
	104	3
124250-03640	12	107
124250-49351	29	42
	49	39
	70	34
	92	38
124298-77020	37	26
	57	33
	79	33
124450-11900	6	1
	20	26
	26	1
	40	19
	46	1
	60	36
124450-44590	72	36
124460-11340	44	29
	60	5
	64	29
	82	5
	86	29
	104	5

Parts No.	Fig. No.	Ref. No.
124465-44950	3	20
	10	26
		26 -1
	20	19
		19 -1
	30	28
		28 -1
	40	27
		27 -1
	50	34
		34 -1
	60	27
		27 -1
	72	34
		34 -1
	82	27
		27 -1
	94	34
		34 -1
	104	40
		40 -1
124550-51350	31	32
	51	32
	73	32
	95	33
124550-51370	31	33
	51	33
	73	33
	95	34
124550-59820	29	37
	49	33
	71	11
	93	13
124550-66370	12	60
	32	57
	52	57
	74	57
	96	57
124550-77030	17	50
	37	49
	57	56
	79	56
	101	32
124732-59080	13	30
	33	30
	53	30
124736-07900	24	5
	44	5
	64	5
	86	5

Parts No. Index

Parts No.	Fig. No.	Ref. No.
124766-59050	13	29
	33	29
	53	29
	75	29
	97	29
124790-52201	13	1
	33	1
	53	1
	75	1
	97	1
124790-55601	15	1
124950-11340	24	27
	40	12
124950-51190	31	17
	51	17
	73	17
	95	15
124976-77011	37	1
128170-51300	31	27
129001-02800	41	14
	61	14
	83	14
129001-21000	48	1
	69	1
129001-32001	29	1
	49	1
129001-35300	29	27
	49	24
129001-42002	50	2
	72	2
	94	2
129001-42040	50	22
	72	22
	94	22
129002-01331	41	28
	60	2
	61	28
	82	2
129002-22090	48	17
	69	17
	91	17
129002-22510	48	19
	69	19
	91	19
129002-22900	48	33
	69	33
	91	33
129002-22950	48	35
	69	35
	91	35

Parts No.	Fig. No.	Ref. No.
129030-44760	72	19
	94	19
129100-01580	3	1
	8	2
	23	1
		14
	28	2
	43	1
		15
	48	2
	63	1
		15
	69	2
	85	1
		15
	91	2
129100-01640	43	16
	63	16
	85	16
129100-01730	43	6
	63	6
129100-01760	43	8
	63	8
129100-11100	44	23
	64	23
	86	23
129100-11130	44	25
	64	25
	86	25
129100-11350	44	50
	64	50
129100-13110	46	2
129100-23910	48	29
	69	29
	91	29
129100-25061	27	9
	47	10
	67	10
	89	9
129100-25900	27	18
	47	16
129100-35140	70	28
	92	32
129100-35301	49	19
	70	24
129100-42020	50	14
	60	15
	72	14
	82	15
	94	14

Parts No.	Fig. No.	Ref. No.
129100-42020	104	16
129100-49840	50	21
	60	18
	72	21
	82	18
	94	21
	104	19
129100-52200	31	94
	51	95
	73	95
	95	95
129100-53000	54	2
129100-59811	54	24
	76	24
129100-59821	54	28
	76	28
129100-59831	54	32
	76	32
129100-59850	34	53
	54	53
	76	53
129100-59951	34	52
	54	52
	76	52
	98	57
129100-59961	34	56
	54	56
	76	56
129100-59970	34	57
	54	57
	76	57
129100-61400	32	18
	52	18
	74	18
	96	18
129100-61501	32	33
	52	33
	74	33
	96	33
129100-61821	32	54
	52	54
	74	54
	96	54
129100-61930	12	57
129100-77330	102	7
129103-01530	62	5
129103-12080	65	9
129103-13110	66	1
129103-18020	68	1
129103-33031	70	16

Parts No.	Fig. No.	Ref. No.
129103-33031	92	17
129103-33132	70	17
	92	18
129103-35122	70	32
	82	39
	92	36
	104	15
129103-39451	71	4
129103-39600	71	14
129103-39611	71	15
129103-49301	72	1
	94	1
129103-53050	76	2
	98	2
129122-44480	62	12
	72	49
	94	49
129129-14580	47	3
	67	3
129132-34800	9	14
129136-12600	5	12
129136-34800	49	16
129150-01200	41	27
	61	27
	83	29
129150-02020	41	7
	61	7
	83	7
129150-02450	27	4
	47	4
	67	4
	89	4
129150-02870	41	32
	61	32
	83	35
129150-02930	41	23
	61	23
	83	23
129150-02940	41	29
	61	29
	83	32
129150-03020	24	50
	44	52
	64	52
	86	53
129150-03070	24	51
	44	53
	64	53
	86	54
129150-03080	24	52

Parts No. Index

Parts No.	Fig. No.	Ref. No.
129150-03080	44	54
	64	54
	86	55
129150-03090	24	1
	44	1
	64	1
	86	1
129150-03100	22	11
	42	11
	62	11
	84	11
129150-11230	24	38
	44	41
	64	41
	86	41
129150-11280	24	36
	44	36
	64	36
	86	36
129150-11290	44	37
	64	37
129150-11310	44	57
	60	8
	64	57
	82	8
129150-11370	44	30
	64	30
	86	30
129150-11750	24	40
	44	43
	64	43
	86	43
129150-11810	44	14
	64	14
	86	17
129150-12100	45	1
	65	1
129150-12111	45	2
	60	10
	65	2
	82	10
129150-13110	46	3
	60	11
	66	2
	82	11
129150-14101	27	7
	47	7
	67	7
	89	7
129150-14200	27	1

Parts No.	Fig. No.	Ref. No.
129150-14200	47	1
	67	1
	89	1
129150-14400	47	2
	67	2
	89	2
129150-21200	28	5
	48	5
	69	5
	91	5
129150-23600	48	31
	69	31
	91	31
129150-23610	48	39
	69	39
	91	39
129150-25101	27	10
	47	11
	67	11
	89	10
129150-25900	67	16
	89	15
129150-25920	27	13
	47	14
	67	14
	89	13
129150-32020	29	14
	40	13
	49	14
	60	13
	70	14
	82	13
	92	15
	104	13
129150-35041	29	18
	40	14
	49	18
	60	14
	70	23
	82	14
	92	24
	104	14
129150-35042	92	24 -1
129150-35111	29	25
	40	15
	49	22
	60	35
129150-35151	29	26
	49	23
	70	33

Parts No.	Fig. No.	Ref. No.
129150-35151	92	37
129150-35350	9	30
	29	28
	49	25
129150-39450	49	29
129150-42020	30	14
	40	16
129150-42320	30	11
129150-49080	10	32
	30	41
	50	40
	72	41
	94	41
129150-49100	10	31
	30	40
	50	39
	72	40
	94	40
129150-49360	10	40
	20	21
	29	43
	30	45
	40	22
		22 -1
	49	40
	50	45
	60	28
		28 -1
	70	35
	72	46
	82	28
		28 -1
	92	39
	94	46
	104	33
		33 -1
129150-49811	30	25
	40	18
	50	28
	60	17
	72	28
	82	17
	94	28
	104	18
129150-59120	14	18
	34	19
	54	19
	76	19
	98	20
129150-59131	14	21

Parts No.	Fig. No.	Ref. No.
129150-59131	34	22
	54	22
	76	22
	98	23
129150-77511	25	11
	40	9
	45	11
	60	9
	65	6
	82	9
	87	11
	104	9
129150-91400	2	32
	22	25
	42	25
	62	24
	84	25
129155-11241	44	33
	64	33
129155-11260	24	34
	44	34
	64	34
	86	34
129155-11270	24	35
	44	35
	64	35
	86	35
129155-42350	50	17
129155-49800	30	24
	50	27
	72	27
	94	27
129155-51020	31	5
	51	5
	73	5
	95	5
129155-51050	31	8
	51	8
	73	8
	95	8
129155-51060	31	9
	51	9
	73	9
	95	9
129155-51140	31	14
	51	14
	73	14
	95	12
129155-51180	31	16
	51	16

Parts No. Index

Parts No.	Fig. No.	Ref. No.
129155-51180	73	16
	95	14
129155-51200	31	18
	51	18
	73	18
	95	16
129155-51270	31	25
	51	25
	73	25
	95	26
129155-51280	12	14
	31	26
	32	2
		2 -1
	51	26
	52	2
		2 -1
	73	26
	74	2
		2 -1
	95	27
	96	2
		2 -1
129155-51320	31	30
	51	30
	73	30
	95	31
129155-51340	31	31
	51	31
	73	31
	95	32
129155-51370	31	34
	51	34
	73	34
	95	35
129155-51380	31	35
	51	35
	73	35
	95	36
129155-51390	31	36
	51	36
	73	36
	95	37
129155-51400	31	37
	51	37
	73	37
129155-51410	31	38
	51	38
	73	38
	95	39

Parts No.	Fig. No.	Ref. No.
129155-51420	31	39
	51	39
	73	39
	95	40
129155-51450	31	40
	51	40
	73	40
	95	41
129155-51500	31	45
	51	45
	73	45
129155-51521	31	46
	51	46
	73	46
	95	47
129155-51530	31	47
	51	47
	73	47
	95	87
129155-51540	31	48
	51	48
	73	48
	95	88
129155-51550	31	49
	51	49
	73	49
	95	48
129155-51570	31	52
	51	52
	73	52
	95	51
129155-51580	31	53
	51	53
	73	53
	95	52
129155-51591	31	54
	51	54
	73	54
	95	89
129155-51600	31	55
	51	55
	73	55
	95	53
129155-51700	31	74
	51	74
	73	74
129155-51710	31	75
	51	75
	73	75
129155-51750	31	76

Parts No.	Fig. No.	Ref. No.
129155-51750	51	76
	73	76
129155-51760	31	77
	51	77
	73	77
129155-51790	31	78
	51	78
	73	78
	95	76
129155-51930	31	80
	51	80
	73	80
	95	90
129155-51940	31	81
	51	81
	73	81
	95	91
129155-52050	31	93
	51	94
	73	94
	95	94
	104	20
129155-61050	32	5
	52	5
	74	5
	96	5
129155-61060	32	6
	52	6
	74	6
	96	6
129155-61070	32	7
	52	7
	74	7
	96	7
129155-61120	32	8
	52	8
	74	8
	96	8
129155-61130	32	9
	52	9
	74	9
	96	9
129155-61140	32	10
	52	10
	74	10
	96	10
129155-61201	32	11
	52	11
	74	11
	96	11

Parts No.	Fig. No.	Ref. No.
129155-61341	32	15
	52	15
	74	15
	96	15
129155-61350	32	16
	52	16
	74	16
	96	16
129155-61360	32	17
	52	17
	74	17
	96	17
129155-61380	32	32 -1
	52	32 -1
	74	32 -1
	96	32 -1
129155-61430	32	21
	52	21
	74	21
	96	21
129155-61450	32	25
	52	25
	74	25
	96	25
129155-61460	32	26
	52	26
	74	26
	96	26
129155-61470	32	79
	52	79
	74	79
	96	79
129155-61480	12	21
	32	27
	52	27
	74	27
	96	27
129155-61490	32	32
	52	32
	74	32
	96	32
129155-61540	32	51
	52	51
	74	51
	96	51
129155-61802	32	75
	52	75
	74	75
	96	75
129155-61810	32	53

Parts No. Index

Parts No.	Fig. No.	Ref. No.
129155-61810	52	53
	74	53
	96	53
129155-61830	14	2
	20	20
	32	55
	52	55
	74	55
	96	55
129155-61950	32	56
	52	56
	74	56
	96	56
129156-51910	31	79
	51	79
	73	79
	95	77
129202-22300	48	23
	69	23
	91	23
129211-49020	50	38
129215-18290	66	6
129255-61410	32	78
	52	78
	74	78
	96	78
129255-61420	32	80
	52	80
	74	80
	96	80
129350-49560	50	25
	72	25
	94	25
129400-01520	22	5
	42	5
	84	5
129400-01730	85	6
129400-01770	85	8
129400-11350	86	51
129400-12100	87	1
129400-59810	98	25
129400-59820	98	29
129400-59830	98	33
129400-59840	98	37
129400-77011	101	1
129400-77330	58	7
	80	7
129400-77400	101	2
129400-77440	101	5
129400-77460	101	7

Parts No.	Fig. No.	Ref. No.
129400-77470	101	8
129400-77480	101	9
129400-77490	101	10
129400-77510	101	11
129400-77520	101	13
129400-77530	101	14
129400-77570	101	18
129400-77640	101	19
129400-92410	20	30
129400-92420	40	42
	60	45
	82	50
	104	51
129403-12090	87	7
129403-39460	93	4
129403-42380	30	18
	72	17
129403-49031	72	50
	94	50
129403-49050	72	51
	94	51
129403-51200	51	11 -1
	73	11
	95	23
129404-18720	68	2
129404-18800	68	20
129404-18820	68	23
129404-18830	68	27
129406-13100	88	1
129406-18030	90	4
129408-01330	83	30
	104	2
129410-65130	100	4
129411-44560	72	53
	94	30
129411-51200	31	11
129411-55690	99	21
129411-59510	97	11
129411-59521	97	15
129411-59530	98	43
129411-59552	98	51
129412-12460	65	5
	87	5
129412-18080	68	41
	82	41
129412-18290	88	7
129412-18391	66	7
129412-18400	88	8
129412-35102	70	26
	92	30

Parts No.	Fig. No.	Ref. No.
129412-51200	51	11
129417-18100	68	42
	82	42
129418-21000	91	1
129418-32000	70	1
	92	1
129430-34800	70	21
	92	22
129432-44740	72	18
	94	18
129436-35070	92	25 -2
129436-35090	92	25
129436-35091	92	25 -1
129470-11080	44	21
	64	21
	86	12
129470-11090	44	22
	64	22
	86	13
129470-12210	25	4
	45	4
129470-51040	95	6
129470-55601	35	2
	55	2
	77	2
	99	2
129470-55610	35	3
	55	3
	77	3
	99	3
129470-55701	35	4
	55	4
	77	4
	99	4
129472-18090	90	2
	104	30
129486-01670	23	18 -1
	43	19 -1
	63	19 -1
	85	19 -1
129488-18770	68	3
129488-18780	68	12
129488-18790	68	16
129491-59540	34	45
	54	45
	76	45
	98	50
129495-59300	34	37
	54	37
	76	37

Parts No.	Fig. No.	Ref. No.
129495-59300	98	42
129500-53000	34	2
129500-61650	32	52
	52	52
	74	52
	96	52
129500-61700	32	76
	52	76
129503-39600	93	18
129506-39610	93	19
129550-11290	86	37
129550-11310	86	58
	104	8
129550-12111	87	2
	104	10
129550-13110	88	2
	104	11
129553-39650	49	47
	70	43
	92	47
129555-11241	86	33
129555-51400	95	38
129555-51500	95	46
129555-51700	95	72
129555-51710	95	73
129555-51750	95	74
129555-51760	95	75
129556-42350	94	17
129608-49020	72	39
	94	39
129688-01780	85	8 -1
129693-44310	88	5 -1
129698-77010	37	1 -1
	57	1 -1
	79	1 -1
129698-77100	37	27
	57	34
	79	34
129698-77110	37	28
	57	35
	79	35
129698-77120	37	29
	57	36
	79	36
129698-77130	37	31
	57	38
	79	38
129698-77140	37	30
	57	37
	79	37

Parts No. Index

Parts No.	Fig. No.	Ref. No.
129698-77150	37	32
	57	39
	79	39
129698-77160	37	33
	57	40
	79	40
129698-77170	37	34
	57	41
	79	41
129698-77180	37	41
	57	48
	79	48
129698-77190	37	42
	57	49
	79	49
129698-77200	37	43
	57	50
	79	50
129698-77210	37	44
	57	51
	79	51
129698-77220	37	45
	57	52
	79	52
129698-77230	37	46
	57	53
	79	53
129698-77240	37	39
	57	46
	79	46
129698-77250	37	40
	57	47
	79	47
129698-77260	37	35
	57	42
	79	42
129698-77270	37	37
	57	44
	79	44
129698-77280	37	38
	57	45
	79	45
129792-13521	90	1
	104	31
129792-22400	28	24
129792-39410	29	44
	49	41
	70	37
	92	41
129795-01780	43	18

Parts No.	Fig. No.	Ref. No.
129795-01780	63	18
	85	18
129795-01800	22	4
	42	4
	62	4
	84	4
129795-01950	22	10
	42	10
	62	10
	84	10
129795-02411	21	20
	41	26
	61	26
	83	26
129795-11120	44	24
	64	24
	86	24
129795-11180	44	26
	64	26
	86	26
129795-12501	25	7
	45	7
129795-12520	25	8
	45	8
129795-12530	25	9
	45	9
129795-12540	25	10
	45	10
129795-21661	28	10
	48	10
	69	10
	91	10
129795-49551	30	23
	40	17
	50	26
	60	16
	72	26
	82	16
	94	26
	104	17
129795-77800	4	60
129900-07900	24	5 -1
	44	5 -1
		5 -2
	64	5 -1
	86	5 -1
135210-51900	15	2
		20
	35	16
	55	16

Parts No.	Fig. No.	Ref. No.
135210-51900	77	16
	99	16
144626-91560	9	20
	29	41
	49	38
	71	20
	93	14
160610-55460	55	1
	77	1
	99	1
171008-55730	37	14
171008-77010	57	1
	79	1
171008-77400	57	2
	79	2
171008-77410	57	3
	79	3
	101	3
171008-77420	57	4
	79	4
	101	4
171008-77440	57	6
	79	6
171008-77450	57	7
	79	7
	101	6
171008-77460	57	8
	79	8
171008-77470	57	9
	79	9
171008-77480	57	10
	79	10
171008-77490	57	11
	79	11
171008-77500	57	12
	79	12
171008-77510	57	13
	79	13
	101	12
171008-77520	57	14
	79	14
171008-77530	57	15
	79	15
171008-77540	57	16
	79	16
	101	15
171008-77571	37	16
	57	19
	79	19
171008-77640	57	20

Parts No.	Fig. No.	Ref. No.
171008-77640	79	20
171008-77650	57	21
	79	21
	101	20
171008-77660	57	22
	79	22
	101	21
171008-77670	57	23
	79	23
	101	22
171008-77720	57	27
	79	27
	101	26
171008-77730	57	28
	79	28
	101	27
171008-77740	57	29
	79	29
	101	28
171008-77750	57	30
	79	30
171010-65100	36	1
	56	1
	78	1
	100	1
171010-77850	19	1
	39	1
	59	1
	81	1
	103	1
171011-44301	18	2
	38	3
	58	3
	80	3
	102	3
171014-91101	19	3
	39	3
	59	3
	81	3
	103	3
171081-55900	15	13
	35	6
	55	6
	77	6
	99	6
171081-55910	15	17
	35	11
	55	11
	77	11
	99	11

Parts No. Index

Parts No.	Fig. No.	Ref. No.
171081-59900	13	33
171081-59910	13	34
171081-59920	13	19
171083-13300	6	4
	26	4
	46	4
171090-91010	19	2
	39	2
	59	2
	81	2
	103	2
171301-01600	23	2
	43	2
	63	2
	85	2
171301-01640	43	9
	63	9
	85	9
171301-21580	28	13
171301-21650	28	9
	91	9
171301-44560	10	37
	30	46
	50	46
171301-49010	50	37
171301-49020	30	38
171335-49010	30	37
171335-49590	30	29
171335-55611	35	5
171335-59511	33	11
171335-59521	33	15
171335-59530	34	38
171335-59551	34	46
171335-61710	74	76
	96	76
171335-65110	36	2
	56	2
	78	2
	100	2
171335-65120	36	3
	56	3
	78	3
	100	3
171335-65130	36	4
	56	4
	78	4
171335-77951	36	5
	56	5
	78	5
	100	5

Parts No.	Fig. No.	Ref. No.
171340-21580	48	13
	69	13
171340-21650	48	9
	69	9
171340-44510	10	27
	30	35
	50	35
171353-44760	10	21
	30	20
171375-35100	29	24
	49	21
171375-39601	9	19
	29	40
	49	37
	71	19
	93	10
171375-44300	18	1
	38	2
	58	2
	80	2
	102	2
171375-44320	18	3
	38	4
	58	4
	80	4
	102	4
171375-44900	10	24
	30	33
	50	32
	72	32
	94	32
171375-44910	10	25
	30	34
	50	33
	72	33
	94	33
171375-52501	33	2
	53	2
	75	2
	97	2
171375-55612	55	5
	77	5
	99	5
171375-59500	13	7
	33	7
	53	7
	75	7
	97	7
171375-59511	53	11
	75	11

Parts No.	Fig. No.	Ref. No.
171375-59521	53	15
	75	15
171375-59530	54	38
	76	38
171375-59551	54	46
	76	46
171420-21580	91	13
171420-49010	72	38
171430-44500	94	35
171430-44560	94	37
171440-49010	94	38
171460-44500	72	35
171460-44560	72	37
171463-12581	65	4
	87	10
171488-61440	32	74
	52	74
	74	74
	96	74
174307-51170	31	15
	51	15
	73	15
	95	13
174307-51560	31	51
	51	51
	73	51
	95	50
174307-51700	12	28
	32	34
	52	34
	74	34
	96	34
194440-51620	13	27
	33	28
	53	28
	75	28
	97	28
194990-22050	2	30
	12	106
	26	5
	46	5
	66	8
	68	43
	88	9
	90	3
22117-040000	12	44
	32	58
	52	58
	74	58
	96	58

Parts No.	Fig. No.	Ref. No.
22117-050000	36	6
	56	6
	78	6
	100	6
22137-040000	11	43
22190-060002	32	71
		71 -1
	52	71
		71 -1
	74	71
		71 -1
	96	71
		71 -1
22190-060003	12	104
22190-080002	22	12
		23
	29	39
	40	21
	42	12
		23
	60	19
	62	23
	71	13
	82	19
	84	23
		24
	93	16
	104	22
22190-100002	32	72
	52	72
	74	72
	96	72
22190-120002	12	105
	32	73
	52	73
	74	73
	96	73
22190-160002	31	90
	51	91
	73	91
	95	85
22190-220002	23	11
22217-040000	11	44
22217-050000	4	56
	31	95
	51	82
	73	82
	95	86
22217-060000	31	82
	51	83

Parts No. Index

Parts No.	Fig. No.	Ref. No.
22217-060000	73	83
	95	78
22217-120000	27	15
	47	17
	67	17
	89	16
22242-000100	4	43
22242-000200	7	15
22252-000200	8	25
22252-000260	48	24
	69	24
	91	24
22272-000040	12	45
	32	59
	52	59
	74	59
	96	59
22272-000060	32	60
	52	60
	74	60
	96	60
22287-120000	32	61
	52	61
	74	61
	96	61
22312-060080	70	30
	92	34
22351-030010	29	51
	49	48
	70	44
	92	14
22351-030014	12	46
22351-030016	32	62
	52	62
	74	62
	96	62
22351-040010	2	19
	12	53
	28	8
	48	8
	69	8
	91	8
22351-050010	31	83
	51	84
	73	84
	95	79
22351-060012	4	62
	24	29
	44	31
	64	31

Parts No.	Fig. No.	Ref. No.
22351-060012	86	31
22360-040000	12	97
22360-050000	36	7
	56	7
	78	7
	100	7
22360-060000	12	98
22372-040000	32	63
	52	63
	74	63
	96	63
22487-050160	36	8
	56	8
	78	8
	100	8
22512-040120	7	8
		22
	8	6
22512-070140	27	8
	28	6
	47	8
	48	6
	67	8
	69	6
	89	8
	91	6
22857-500100	4	58 -1
23000-022000	71	16
	72	52
	94	52
23000-025000	93	20
23000-054000	65	7
		10
	87	6
		8
23000-060000	5	13
	25	12
	45	12
	87	9
23000-070000	65	11
23010-038000	10	36
	30	39
	50	44
	72	45
	94	45
23065-120500	4	63
23297-080081	98	19
23414-060000	34	60
	40	25
	54	60

Parts No.	Fig. No.	Ref. No.
23414-060000	60	21
	76	60
	82	21
	98	65
	104	42
23414-080000	49	34
	60	23
	82	23
23414-080012	13	24
	15	8
		21
	20	25
	33	18
	34	61
	35	14
	40	24
	53	18
	54	61
	55	14
	60	20
	75	18
	76	61
	77	14
	82	20
	97	18
	98	66
	99	14
	104	41
23414-100000	29	38
	40	34
	49	35
	60	24
	71	12
	82	24
	93	15
	104	23
23414-120000	13	20
		25
		31
	20	29
	33	19
		20
		21
		25
	40	23
	53	19
		20
		21
		25
	60	25

Parts No.	Fig. No.	Ref. No.
23414-120000	75	19
		20
		21
		25
	82	25
	97	19
		20
		21
		25
	104	32
23414-140000	13	21
	14	47
	20	22
	34	62
	40	26
	54	62
	60	22
	76	62
	82	22
	98	67
	104	43
23414-170000	6	5
	20	27
	26	6
	40	28
	46	6
	60	26
	66	9
	82	26
	88	10
	104	24
23414-220000	23	20
	43	21
23418-060000	15	9
		19
	35	13
	55	13
	77	13
	99	13
23851-030000	34	63
	54	63
	76	63
	98	68
23857-060000	13	22
		26
		32
	33	22
		23
		24
		26

Parts No. Index

Parts No.	Fig. No.	Ref. No.
23857-060000	53	22
		23
		24
		26
	75	22
		23
		24
		26
	97	22
		23
		24
		26
23871-010000	21	7
	25	6
	41	10
	45	6
	61	10
	83	10
23871-020000	44	16
	64	16
	70	29
	86	18
	92	33
23871-030000	4	14
	24	17
	30	12
	44	17
	50	12
	64	17
	72	12
	83	31
	86	19
	87	3
	94	12
23887-100002	32	64
	52	64
	74	64
	96	64
23887-120002	21	21
23894-030002	6	6
	26	7
	46	7
	66	10
	88	11
24101-062034	7	24
24101-063034	31	84
	51	85
	73	85
	95	10
24102-063034	7	23

Parts No.	Fig. No.	Ref. No.
24190-080001	34	58
	54	58
	76	58
24190-090001	13	23
24311-000110	9	16
24311-000120	2	6
	4	59
	20	3
		3 -1
	24	60
	40	29
	44	62
	60	29
	64	62
	82	29
	86	63
	104	25
24311-000160	22	14
	29	29
	40	30
	42	14
	49	26
	60	30
	62	14
	82	30
	84	13
	104	26
24311-000180	3	16
	20	7
24311-000200	70	18
	82	35
	92	19
	104	34
24311-000210	70	19
	82	36
	92	20
	104	35
24311-000320	2	13
	4	57
	20	4
	22	15
	24	62
	40	31
	42	15
	44	65
	60	31
	62	15
	64	65
	82	31
	84	14

Parts No.	Fig. No.	Ref. No.
24311-000320	86	59
	104	27
24311-240100	12	99
	32	65
	52	65
	74	65
	96	65
24314-000160	71	17
	82	38
	93	21
	104	37
24321-000300	50	23
	60	34
	72	23
	82	34
	94	23
	104	39
24321-000350	10	18
	20	17
24321-000550	70	20
	82	37
	92	21
	104	36
24341-000070	12	54
24341-000160	31	85
	51	86
	73	86
	95	80
24341-000240	2	34
	20	5
	22	27
	40	32
	42	27
	60	32
	62	26
	82	32
	84	27
	104	28
24341-000250	43	11
	63	11
	85	11
	104	38
24341-000440	15	10
24341-000500	24	57
	40	33
	44	59
	60	33
	64	59
	82	33
	86	60

Parts No.	Fig. No.	Ref. No.
24341-000500	104	29
25132-003800	72	16
25132-003900	30	17
	94	16
26013-080142	10	38
	30	47
	50	47
	72	47
	94	47
26014-080252	18	6
	38	8
	58	8
	80	8
	102	8
26022-040082	11	45
26022-050102	31	86
	32	66
	51	87
	52	66
	73	87
	74	66
	95	81
	96	66
26022-060162	31	87
	51	88
	73	88
	95	82
26023-050102	32	67
	52	67
	74	67
	96	67
26106-060102	3	17
	12	55
	13	3
	32	82
	33	3
	52	82
	53	3
	74	82
	75	3
	96	82
	97	3
26106-060122	1	25
	5	14
	7	16
	9	17
	36	9
	56	9
	78	9
	98	70

Parts No. Index

Parts No.	Fig. No.	Ref. No.
26106-060122	100	9
26106-060142	15	11
		12
	35	17
	55	18
	77	18
	99	18
26106-060162	2	7
		35
		38
	7	25
	22	28
	42	28
	62	27
	71	18
	84	28
	93	22
26106-060202	5	19
	32	68
	52	68
	74	68
	96	68
26106-060222	3	10
26106-060302	2	8
26106-060322	57	31
	79	31
	101	29
26106-060352	6	7
	10	22
	30	21
26106-060402	2	9
	10	19
	57	32
	79	32
	101	30
26106-060452	3	18
26106-060502	2	10
	72	20
	94	20
26106-060602	50	20
26106-060652	2	11
26106-060702	12	100
26106-060752	12	108
26106-080102	93	12
26106-080122	22	16
	42	16
	62	16
	84	15
26106-080142	4	5
		6

Parts No.	Fig. No.	Ref. No.
26106-080142	24	6
	27	17 -1
	36	10
	44	6
	47	9 -1
	56	10
	64	6
	66	11
	67	9 -1
	78	10
	86	6
	88	12
	89	18
	100	10
26106-080162	5	15
	13	4
	22	17
		24
	23	12
	24	58
	25	13
	27	17
	33	4
	35	18
	42	17
		24
	43	12
	44	60
	45	13
	47	9
	50	24
	53	4
	55	19
	62	17
	63	12
	64	60
	67	9
	72	24
	75	4
	77	19
	84	16
		17
	85	12
	86	61
	94	24
	97	4
	99	19
26106-080182	18	7
26106-080202	22	18
	29	30

Parts No.	Fig. No.	Ref. No.
26106-080202	42	18
	49	27
	50	29
	62	18
	72	29
	84	18
	94	29
26106-080252	24	45
	25	3
	43	13
	44	48
	45	3
	63	13
	64	48
	65	3
	85	13
	86	49
26106-080302	23	18
	30	30
	43	19
	63	19
	85	19
	99	22
26106-080352	23	19
	29	23
	30	15
	43	20
	49	20
	63	20
	65	8
	70	25
	85	20
	87	4
		12
	92	29
26106-080452	4	45
	6	8
	10	13
	22	19
	23	13
	26	8
	27	14
	42	19
	43	14
		14 -1
	46	8
	47	15
	62	19
	63	14
		14 -1

Parts No.	Fig. No.	Ref. No.
26106-080452	67	15
	84	19
	85	14
		14 -1
	89	14
26106-080502	24	46
	43	23
	44	49
	58	9
	63	22
	64	49
	66	3
	80	9
	85	22
	86	50
	102	9
26106-080552	22	20
	30	16
	42	20
	62	20
	84	20
	92	29 -1
26106-080602	26	9
	30	31
	50	15
	66	4
	72	15
	94	15
26106-080652	88	3
26106-080752	70	36
	92	40
26106-080802	46	9
26106-080852	22	21
	42	21
	62	21
	84	21
	88	4
26106-080952	6	9
	26	10
	46	10
26106-081002	88	5
26106-100162	13	5
	33	5
	53	5
	66	13
	75	5
	97	5
26106-100302	35	1
26106-100352	18	8
26116-050102	12	101

Parts No. Index

Parts No.	Fig. No.	Ref. No.
26116-050302	31	88
	51	89
	73	89
	95	83
26116-060304	12	102
26116-120252	17	49
	37	48
	57	55
	79	55
	101	31
26117-040088	16	7
26206-100252	3	5
	23	4
	43	4
	63	4
	85	4
26206-100302	23	5
	43	5
	63	5
	85	5
26216-060202	44	18
	64	18
	86	20
26216-060302	24	18
26216-060402	6	10
26216-080222	66	5
		12
	88	6
		13
26216-080602	26	11
26216-080802	46	11
26226-080182	24	41
	44	44
	64	44
	86	44
26366-060002	2	31
	5	16
	6	11
	24	47
	44	32
	64	32
	86	32
26366-080002	4	46
	10	39
	22	22
	30	48
	42	22
	50	48
	55	20
	62	22

Parts No.	Fig. No.	Ref. No.
26366-080002	72	48
	77	20
	84	22
	94	48
	99	20
26366-100002	38	6
	58	6
	80	6
	102	6
26450-060202	9	12
26450-060252	29	15
	49	15
	70	15
	92	16
26450-080182	1	28
26450-080302	30	32
26557-050102	4	58
26587-040102	11	46
26587-080102	7	26
26687-120002	32	77
	52	77
	74	77
	96	77
26706-100002	18	4
	38	5
	58	5
	80	5
	102	5
26716-060002	31	89
	51	90
	73	90
	95	84
26716-120002	27	16
	47	18
	67	18
	89	17
26756-060002	4	38
		42
	12	103
	32	69
	52	69
	74	69
	96	69
26756-080002	86	45
26776-120002	12	94
	32	70
	52	70
	74	70
	96	70
27221-050080	4	15

Parts No.	Fig. No.	Ref. No.
27221-060100	1	11
27231-400000	1	12
27231-500000	21	8
	41	11
	61	11
	83	11
27241-100000	1	13
	34	59
	54	59
	76	59
27241-120000	21	9
	41	12
	61	12
	83	12
27241-200000	70	31
	92	35
27241-220000	24	19
	44	19
	64	19
	86	21
27241-250000	1	14
27241-300000	1	15
	21	10
	41	13
	61	13
	83	13
27241-350000	4	16
27241-400000	24	20
	44	20
	64	20
	86	22
27310-070001	24	25
27310-080001	44	27
	64	27
	86	27
28110-100120	20	34
	40	38
	60	41
	82	46
	104	47
28110-140170	20	35
	40	39
	60	42
	82	47
	104	48
28110-190220	20	36
	40	40
	60	43
	82	48
	104	49

Parts No.	Fig. No.	Ref. No.
28210-000140	20	37
	40	41
	60	44
	82	49
	104	50
43551-001451	34	64
	54	64
	76	64
	98	69
46150-504600	1	29
	21	6
	41	6
	61	6
	83	6
714250-11570	4	21
719215-01560	1	1
719215-92600	20	1
719225-51100	11	1
719260-02800	1	17
719260-02870	1	30
719260-02930	1	20
719260-11520	4	48
719260-11650	4	35
719260-11660	4	39
719260-23600	8	32
719260-23610	8	40
719265-22900	8	34
719265-22950	8	36
719620-53700	14	1
719810-01500	22	1
	42	1
	62	1
	84	1
719810-01650	23	15
719810-11520	24	48
719810-11650	24	37
719810-23100	28	25
719818-11700	24	7
719818-92620	40	1
719915-01560	21	1
719915-51400	31	1
721400-92102	20	31
	40	35
	60	38
	82	43
	104	44
729002-92680	60	1
729002-92690	82	1
729100-53300	54	1
729103-53300	76	1

Parts No. Index

Parts No.	Fig. No.	Ref. No.
729103-53300	98	1
729202-11710	44	7
	64	7
729205-51400	51	1
729215-01560	41	1
	61	1
729215-51400	73	1
729402-11650	44	40
	64	40
	86	40
729402-14580	89	3
729402-23100	48	25
	69	25
	91	25
729408-11701	86	7
729408-92660	104	1
729418-11100	86	7 -1
729500-53300	34	1
729615-01560	83	1
729615-51400	95	1
977770-01212	2	39
	3	21
	20	38
	22	29
	23	21
	40	43
	42	29
	43	22
	60	46
	62	28
	63	21
	82	51
	84	29
	85	21
	104	52
X0280210230	17	8
X0280630011	17	2
X0281003751	17	3
X0282001531	17	4
X0283005050	17	7
X0283060061	17	16
X0283270140	17	9
X0283711420	17	17
X0283715030	17	10
X0283810040	17	11
X0284004910	17	18
X0285040631	17	19
X0285100460	17	20
X0534006460	17	22
X0534040320	17	23

Parts No.	Fig. No.	Ref. No.
X0534490120	17	24
		25
X0534490230	17	26
		27
X0535050620	17	28
X0535130241	17	29
X0535130320	17	30
X0536600401	17	31
X211414501	37	13
X211415502	37	3
X211415505	37	20
X211425502	37	4
X211425505	37	23
X21142867	37	19
X211429006	37	22
X211429007	37	9
X21143215	37	6
X211435502	37	24
X211445502	37	25
X211451007	37	2
X2114535200	37	36
	57	43
	79	43
X21145866	37	18
X211459002	37	11
X21146012	37	15
X211468005	37	17
X211469002	37	7
X211472106	37	5
X211476504	37	12
X211483003	37	8
X21148314	37	10
X211495009	37	21
X9151005141	17	32
X9490071810	17	43
X9490071970	17	44
X9490170900	17	33
		34
X9490423330	17	45
X9490441303	17	35
X9490441312	17	36
X9490502820	17	37
		38
X9490561370	17	46
X9490721080	17	12
X9491001360	17	5
X9491001860	17	6
X9491200240	17	47
X9491402100	17	39
		40

Parts No.	Fig. No.	Ref. No.
X9491703371	17	13
X9491703380	17	48
X9491704260	17	14
X9491730461	17	21

Parts No.	Fig. No.	Ref. No.