YANMAR

PARTS CATALOG

0CV10-M56900EN

Last update Aug., 2015

PREFACE

1. This Parts Catalog carries all parts incorporated in YANMAR Model 3TNE78A - NSR engine manufactured since March, 1998.

2. Each illustration corresponds to the parts list on the following page.

3. When ordering parts, clearly write down the engine model and serial number, as well as the name and number of each part in your order sheet. This will help insure reliable delivery of the parts you have ordered.

Directions for the Parts Catalog.

1.This Parts Catalog shows both standard and optional parts.
2.Parts may change without prior notice.
3.The following is an example of the Parts Catalog format.

0CF10-G21601 29. FUEL INJECTION PUMP(W/BOOST)

(A)=4JH-DT
(B)=4JH-DTZ
(C)=4JH-DTZP
(D)=4JH-DTZA
(E)=4JH-DTZY
(F)=

① REF.	② LEV.	PARTS NO.	DESCRIPTION	Q'TY (A)	(B)	(C)	(D)	(E)	(F)	③ I	⑤ R
1	1	729595-51390	FUEL INJECTION PUMP	1	1	1	1	1			1
1-1	1	729595-51391	FUEL INJECTION PUMP	1	1	1	1	1		N	1
	(A=E00185)	(B=E00200)									
3	2	26022-060162	SCREW M 6X 16	9	9	9	9	9			
3-1 ④	2	26022-060162	SCREW M 6X 16	4	4	4	4	4		K	
	(A=E00156)	(B=E00156)	(C=E00156) (D=E00156)	(E=E00156)							
4	2	129470-51040	CAMSHAFT	1	1	1	1	1			
5	2	122710-51050	BEARING, ROLLER	2	2	2	2	2			
6	2	129470-51060	RETAINER	1	1	1	1	1			

Remarks
(1) BOOST COMPEMSATOR TYPE. OPTIONAL PART, TO E00155,(4JH-DT, 4JH-DTZ

①Ref. No.

The Ref. No. listed may not be in accordance with the illustration Ref. No.

(Ex.) Illustration No. 1 List Ref No. 1 (Before change) → 1- 1 (After change)

For interchangeable symbols N, R and K, illustrations for new parts may be abbreviated.

②Lev. (Level)

Level indication
The numbers below indicate the level of relativity towards the main part.
1 ----- Main parts (Assembly parts)
2 ----- Sub component included in " 1 ".
3 ----- Sub component included in " 2 ".
Note) Parts that are not for sale are partially illustrated but not listed.

③Interchangeability Symbol

When a part change takes place, one of the following interchangeability symbols is indicated beside the part.

Symbol	Interchangeability	Contents note
N	Old ← Yes / No → New	New Part is interchangeable for Old Part but Old Part is not interchangeable for New Part.
Q	Old ← No / Yes → New	New Part is not interchangeable for Old Part but Old Part is interchangeable for New Part.
R	Old ← Yes / Yes → New	New/ Old Parts are both interchangeable.
S	Old ← No / No → New	New/ Old Parts are both not interchangeable.
W		Part newly added.
Z		Part discontinued.
F		Not interchangeable by a single part but interchangeable together with related parts.
K		Changes only for used parts quantities.

④Effective Machine No.

When a part changes, the effective Machine No. will be indicated in the (A)-(F) column.

Product Symbol	Product No.	Product Symbol	Product No.
C	Clutch No. Compressor No.	F	Machine No. (Agricultural Equip.)
D	Drive No.	M	Machine No.
E	Engine No.		

Note 1) A date may follow the symbol. (Ex.) 1996.01
Note 2) " XXXXX " and " ZZZZZ " are for parts that could not be predicted or for engine models that could not be identified.
Note 3) (A=E00185) is the E (Engine Serial Number) for the column (A) model (in this case 4JH-DT) after the parts design change.

⑤Remarks

Figures or alphabets (symbols) are entered in the remarks column.
The comments (remarks) on parts that are indicated at the bottom of the illustration are the same symbols as those stated above.

Contents

0CV10-M56900

Fig. No.	Fig. Name
ENGINE SECTION 3TNE78A-NSR	
1.	CYLINDER BLOCK
2.	GEAR HOUSING
3.	FLYWHEEL HOUSING & OIL SUMP
4.	CYLINDER HEAD & BONNET
5.	SUCTION MANIFOLD & AIR CLEANER
6.	EXHAUST MANIFOLD & SILENCER
7.	CAMSHAFT & DRIVING GEAR
8.	CRANKSHAFT & PISTON
9.	LUB.OIL SYSTEM
10.	COOLING WATER SYSTEM
11.	FUEL INJECTION PUMP
12.	GOVERNOR
13.	FUEL INJECTION VALVE
14.	FUEL LINE
15.	STARTING MOTOR
16.	GENERATOR
17.	GASKET SET

Fig.1. CYLINDER BLOCK

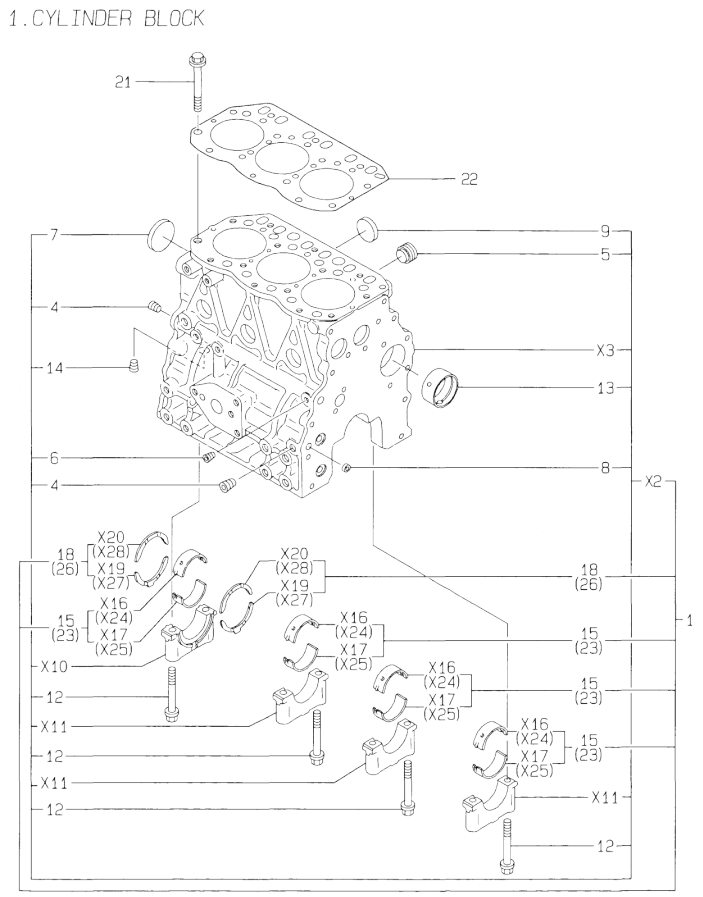

Remarks
(1) UNDER-SIZE(U.S=0.25)PART.
(2) OVER-SIZE(O.S=0.25)PART.

(A)=3TNE78A-NSR (D)=
(B)= (E)=
(C)= (F)=

No.	Lev.	Parts No.	Description	Q'ty (A)	(B)	(C)	(D)	(E)	(F)	I	R
1	1	719822-01560	BLOCK ASSY, CYLINDER	1							
4	3	124160-01910	PLUG, PT1/4	2							
5	3	171051-01921	PLUG, NPTF1	1							
6	3	23871-010000	PLUG, R01	1							
7	3	27231-500000	PLUG 50	1							
8	3	27241-120000	PLUG, 12	2							
9	3	27241-300000	PLUG 30	6							
12	3	119620-02020	BOLT, METAL CAP	8							
13	3	129795-02411	BUSH, CAMSHAFT	1							
14	3	124160-01910	PLUG, PT1/4	1							
15	2	119810-02800	BEARING, MAIN	4							
18	2	119810-02930	BEARING, THRUST	1							
21	1	119810-01200	BOLT, HEAD	14							
22	1	119818-01330	GASKET, HEAD	1							
23	1	119810-02870	BEARING, 0.25 US	4							1
26	1	119810-02940	BEARING, THRUST 0.25	2							2

N:Old ←Yes/No→ New. Q:Old ←No/Yes→ New. R:Old ←Yes/Yes→ New. S:Old ←No/No→ New. W:Add. Z:Discontinued. F:Interchangeable by set. K:Q'ty Change

Copyright (C) YANMAR CO., LTD. All RightsReserved.

Fig.2. GEAR HOUSING

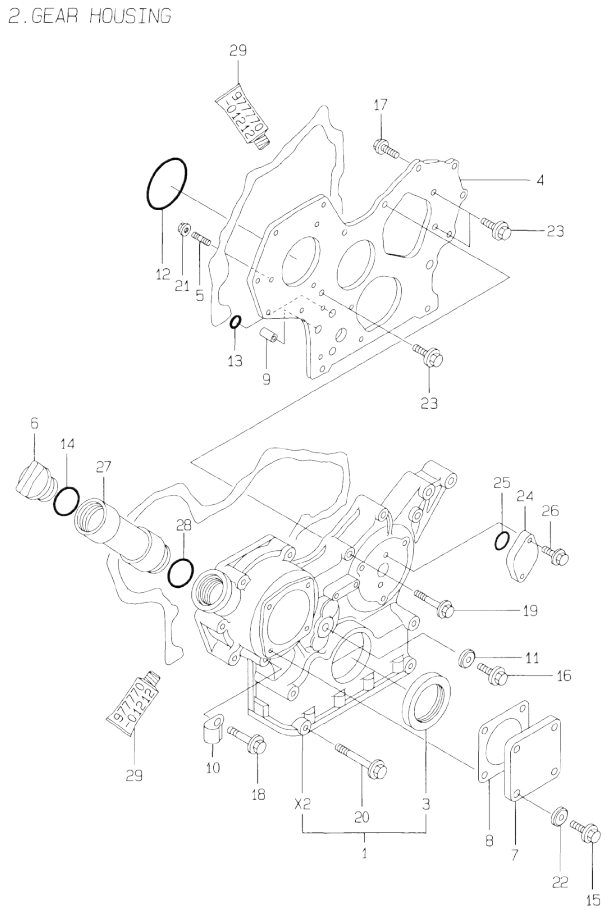

(A)=3TNE78A-NSR (D)=
(B)= (E)=
(C)= (F)=

No.	Lev.	Parts No.	Description	Q'ty (A)	(B)	(C)	(D)	(E)	(F)	I	R
1	1	719810-01500	CASE ASSY, GEAR	1							
3	2	129795-01800	SEAL, OIL	1							
4	1	129400-01520	FLANGE, GEAR CASE	1							
5	1	121450-01560	STUD, M8X22	3							
6	1	124160-01751	COVER, FILLER	1							
7	1	124240-01871	COVER	1							
8	1	124240-01883	GASKET	1							
9	1	129795-01950	PIPE, KNOCK L=18	2							
10	1	129150-03100	RETAINER, PIPE	1							
11	1	22190-080002	WASHER, SEAL 6	1							
12	1	121850-51960	O-RING	1							
13	1	24311-000160	O-RING, 1AP16.0	2							
14	1	24311-000320	O-RING, 1AP32.0	1							
15	1	26106-080122	BOLT, M8X 12 PLATED	4							
16	1	26106-080162	BOLT, M8X 16 PLATED	1							
17	1	26106-080202	BOLT, M8X 20 PLATED	2							
18	1	26106-080452	BOLT, M8X 45 PLATED	6							
19	1	26106-080552	BOLT, M8X 55 PLATED	3							
20	1	129001-91840	BOLT, M8X85	4							
21	1	26366-080002	NUT, M8	3							
22	1	22190-080002	WASHER, SEAL 6	4							
23	1	26106-080162	BOLT, M8X 16 PLATED	3							
24	1	121023-01550	COVER	1							
25	1	24341-000240	O-RING, 1AS24.0	1							
26	1	26106-060122	BOLT, M6X 12 PLATED	2							
27	1	171031-11741	PIPE	1							
28	1	24311-000320	O-RING, 1AP32.0	1							
29	1	977770-01212	GASKET, LIQUID	1							1

Remarks
(1) OPTIONAL PART.

N:Old $\frac{\text{Yes}}{\text{No}}$ New. Q:Old $\frac{\text{No}}{\text{Yes}}$ New. R:Old $\frac{\text{Yes}}{\text{Yes}}$ New. S:Old $\frac{\text{No}}{\text{No}}$ New. W:Add. Z:Discontinued. F:Interchangeable by set. K:Q'ty Change

Copyright (C) YANMAR CO., LTD. All RightsReserved.

Fig.3. FLYWHEEL HOUSING & OIL SUMP

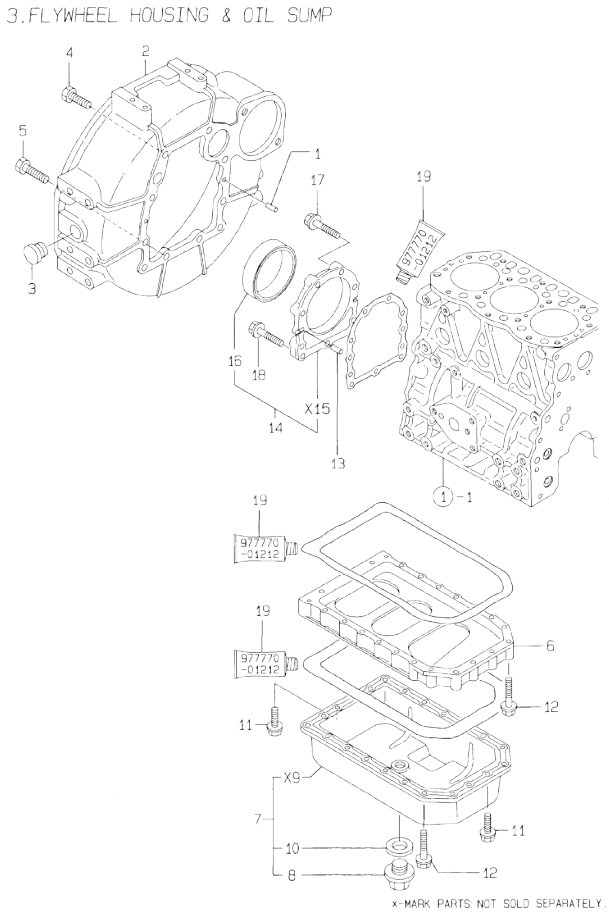

Remarks
(1) OPTIONAL PART.

(A)=3TNE78A-NSR (D)=
(B)= (E)=
(C)= (F)=

No.	Lev.	Parts No.	Description	Q'ty (A)	(B)	(C)	(D)	(E)	(F)	I	R
1	1	129100-01580	PIN, M8X16	2							
2	1	129612-01600	HOUSING, FLYWHEEL	1							
3	1	119620-01750	CAP	1							
4	1	26206-100252	BOLT, M10X 25 PLATED	6							
5	1	26206-100302	BOLT, M10X 30 PLATED	4							
6	1	119810-01730	SPACER, OIL SUMP	1							
7	1	119810-01790	SUMP ASSY, OIL	1							
8	2	119640-01640	PLUG, DRAIN M22	1							
10	2	22190-220002	WASHER, SEAL 22	1							
11	1	26106-080162	BOLT, M8X 16 PLATED	6							
12	1	26106-080452	BOLT, M8X 45 PLATED	22							
13	1	129100-01580	PIN, M8X16	2							
14	1	719810-01650	CASE ASSY, OIL SEAL	1							
16	2	119810-01780	SEAL, 769310	1							
17	1	129486-01670	BOLT, M8X30	6							
18	1	26106-080352	BOLT, M8X 35 PLATED	3							
19	1	977770-01212	GASKET, LIQUID	1							1

N:Old $\frac{\text{Yes}}{\text{No}}$ New. Q:Old $\frac{\text{No}}{\text{Yes}}$ New. R:Old $\frac{\text{Yes}}{\text{Yes}}$ New. S:Old $\frac{\text{No}}{\text{No}}$ New. W:Add. Z:Discontinued. F:Interchangeable by set. K:Q'ty Change

Copyright (C) YANMAR CO., LTD. All RightsReserved.

Fig.4. CYLINDER HEAD & BONNET

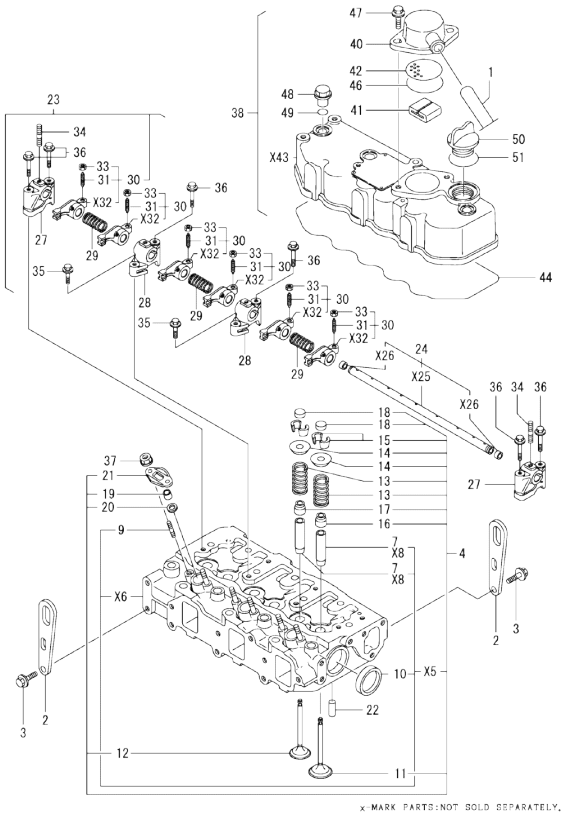

(A)=3TNE78A-NSR (D)=
(B)= (E)=
(C)= (F)=

No.	Lev.	Parts No.	Description	Q'ty (A)	(B)	(C)	(D)	(E)	(F)	I	R
1	1	23065-160800	PIPE, 16X 800	1							
2	1	124736-07900	LIFTER	2							
3	1	26106-080142	BOLT, M8X 14 PLATED	4							
4	1	119812-11700	HEAD ASSY, CYLINDER	1							
7	3	124060-11800	GUIDE, VALVE	6							1
9	3	26216-060302	STUD, M6X 30	6							
10	3	27241-400000	PLUG, 40	2							
11	2	119810-11100	VALVE, INTAKE	3							
12	2	119810-11110	VALVE, EXHAUST	3							
13	2	119810-11120	SPRING, VALVE	6							
14	2	104211-11180	RETAINER, SPRING	6							
15	2	27310-070001	COTTER, 7	6							
16	2	124160-11340	SEAL, VALVE STEM	3							
17	2	124950-11340	SEAL, VALVE STEM	3							
18	2	104211-11370	CAP, VALVE	6							
19	2	119625-11870	PROTECTOR, NOZZLE	3							
20	2	119625-11880	SEAT, NOZZLE	3							
21	2	119625-11900	RETAINER, NOZZLE	3							
22	1	22351-060012	PIN, SPRING 6.0X12	2							
23	1	119865-11210	SUPPORT ASSY	1							
24	2	119810-11240	SHAFT ASSY, ROCKER	1							
27	2	129155-11260	SUPPORT, ROCKER ARM	2							
28	2	129155-11270	SUPPORT, ROCKER ARM	2							
29	2	129150-11280	SPRING	3							
30	2	719810-11660	ARM ASSY, ROCKER	6							
31	3	129150-11230	SCREW, VALVE ADJUST	6							
33	3	129150-11750	NUT, M8	6							
34	2	26226-080182	STUD, M8X 18	3							
35	1	26106-080252	BOLT, M8X 25 PLATED	2							
36	1	26106-080502	BOLT, M8X 50 PLATED	6							
37	1	26366-060002	NUT, M6	6							
38	1	719810-11520	BONNET ASSY, HEAD	1							
40	2	129150-03020	COVER, BREATHER	1							
41	2	129150-03070	BAFFLE, BREATHER	1							
42	2	129150-03080	PLATE, BAFFLE	1							
44	2	119865-11310	GASKET, BONNET	1							
46	2	24341-000500	O-RING, 1AS50.0	1							
47	2	26106-080162	BOLT, M8X 16 PLATED	2							
48	1	124160-11360	KNOB	3							
49	1	24311-000120	O-RING, 1AP12.0	3							
50	1	124160-01751	COVER, FILLER	1							
51	1	24311-000320	O-RING, 1AP32.0	1							

Remarks
(1) REPAIR PART.

N:Old ←Yes/No→ New. Q:Old ←No/Yes→ New. R:Old ←Yes/Yes→ New. S:Old ←No/No→ New. W:Add. Z:Discontinued. F:Interchangeable by set. K:Q'ty Change

Copyright (C) YANMAR CO., LTD. All RightsReserved.

Fig.5. SUCTION MANIFOLD & AIR CLEANER

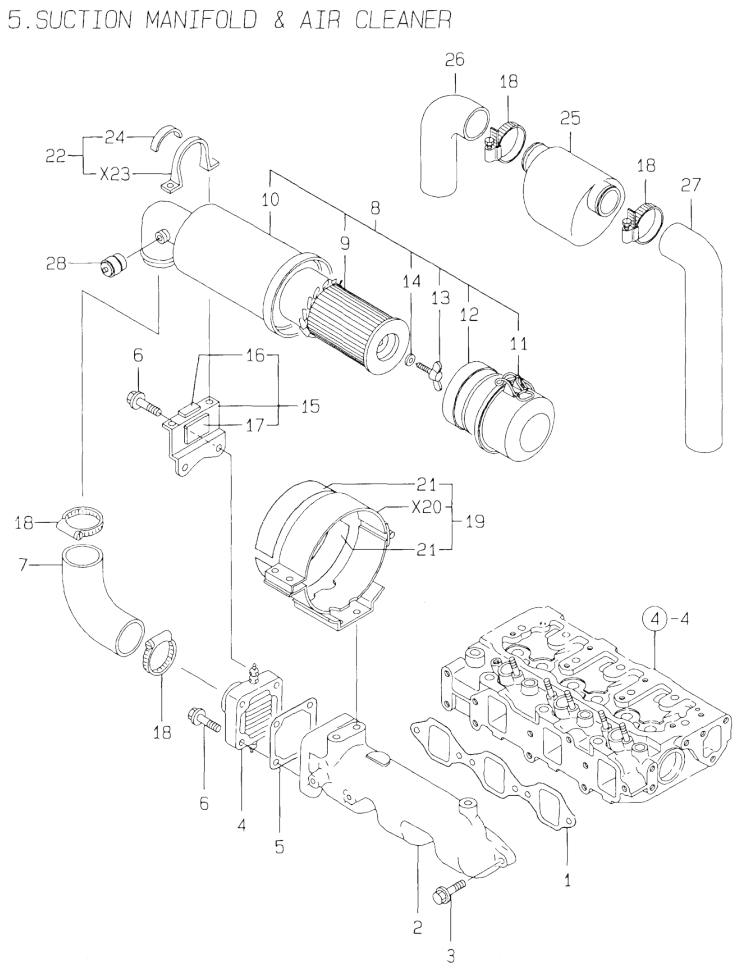

(A)=3TNE78A-NSR (D)=
(B)= (E)=
(C)= (F)=

No.	Lev.	Parts No.	Description	Q'ty (A)	(B)	(C)	(D)	(E)	(F)	I	R
1	1	119810-12111	GASKET, MANIFOLD	1							
2	1	171301-12701	MANIFOLD, AIR INTAKE	1							
3	1	26106-080252	BOLT, M8X 25 PLATED	4							
4	1	129120-77501	HEATER	1							
5	1	129150-77511	GASKET	1							
6	1	26106-080352	BOLT, M8X 35 PLATED	4							
7	1	119840-12210	PIPE, AIR INTAKE	1							
8	1	119840-12500	CLEANER ASSY, AIR	1							
9	2	129350-12900	ELEMENT	1							
10	2	119840-12650	CASE ASSY	1							
11	2	129350-12660	PAN ASSY, DUST	1							
12	2	121120-12541	RETAINER, ELEMENT	1							
13	2	121120-12561	BOLT	1							
14	2	121120-12571	WASHER, SEAL	1							
15	1	119836-12810	SUPPORT, AIR CLEANER	1							
16	2	129132-12890	SEAT, RUBBER	1							
17	2	129132-12900	DAMPER	1							
18	1	23000-060000	CLAMP, 60	5							
19	1	129132-12581	SUPPORT ASSY,CLEANER	1							
21	2	129132-12570	SEAT, RUBBER	2							
22	1	129132-12800	BAND, AIR CLEANER	1							
24	2	129132-12860	SEAT, RUBBER	1							
25	1	121855-12060	SILENCER ASSY	1							
26	1	119641-12570	PIPE, AIR INTAKE	1							
27	1	119233-12620	PIPE, AIR INTAKE	1							
28	1	126650-12680	INDICATOR	1							

N:Old ←Yes/No→ New. Q:Old ←No/Yes→ New. R:Old ←Yes/Yes→ New. S:Old ←No/No→ New. W:Add. Z:Discontinued. F:Interchangeable by set. K:Q'ty Change

Copyright (C) YANMAR CO., LTD. All RightsReserved.

Fig.6. EXHAUST MANIFOLD & SILENCER

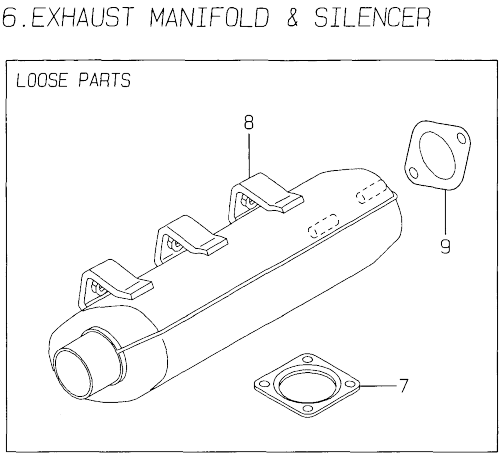

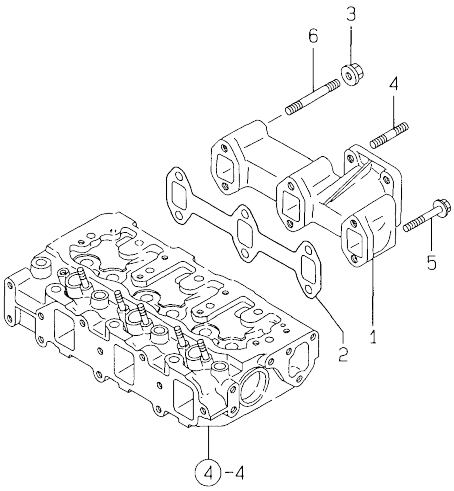

(A)=3TNE78A-NSR (D)=
(B)= (E)=
(C)= (F)=

No.	Lev.	Parts No.	Description	Q'ty (A)	(B)	(C)	(D)	(E)	(F)	I	R
1	1	119810-13100	MANIFOLD, EXHAUST	1							
2	1	119810-13110	GASKET	1							
3	1	26366-080002	NUT, M8	2							
4	1	119131-18320	STUD, M8X22	4							
5	1	26106-080602	BOLT, M8X 60 PLATED	4							
6	1	26216-080602	STUD, M8X 60	2							
7	1	124701-11911	GASKET, SILENCER	1							
8	1	119332-13502	SILENCER	1							
9	1	129107-13550	GASKET	1							

N:Old ←Yes/No→ New. Q:Old ←No/Yes→ New. R:Old ←Yes/Yes→ New. S:Old ←No/No→ New. W:Add. Z:Discontinued. F:Interchangeable by set. K:Q'ty Change

Copyright (C) YANMAR CO., LTD. All RightsReserved.

Fig.7. CAMSHAFT & DRIVING GEAR

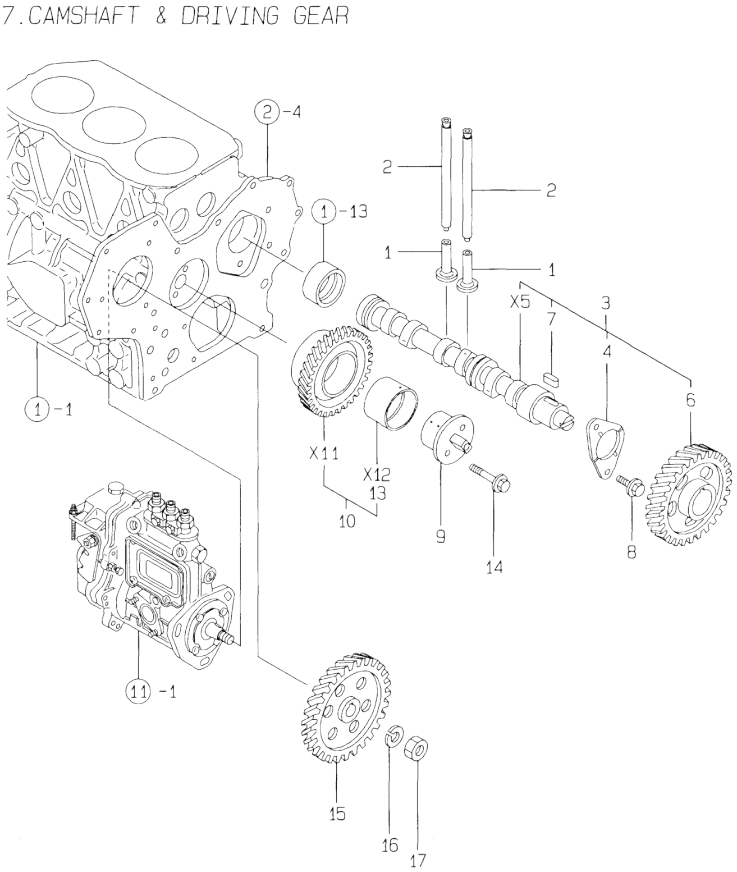

Remarks
(1) REPAIR PART.

(A)=3TNE78A-NSR (D)=
(B)= (E)=
(C)= (F)=

No.	Lev.	Parts No.	Description	Q'ty (A)	(B)	(C)	(D)	(E)	(F)	I	R
1	1	129150-14200	TAPPET	6							
2	1	119810-14400	ROD, PUSH	6							
3	1	119810-14580	CAMSHAFT ASSY	1							
4	2	129150-02450	BEARING, THRUST	1							
6	2	129150-14101	GEAR, CAMSHAFT	1							
7	2	22512-070140	KEY, 7X 14	1							
8	1	26106-080142	BOLT, M8X 14 PLATED	2							
9	1	129100-25061	SHAFT, IDLE	1							
10	1	129150-25101	GEAR ASSY, IDLE	1							
13	2	129150-25920	BUSH, IDLE GEAR	1							1
14	1	26106-080452	BOLT, M8X 45 PLATED	2							
15	1	129150-25900	GEAR, PUMP	1							
16	1	22217-120000	WASHER, SPRING 12	1							
17	1	26716-120002	NUT, M12	1							

N:Old ←Yes/No→ New. Q:Old ←No/Yes→ New. R:Old ←Yes/Yes→ New. S:Old ←No/No→ New. W:Add. Z:Discontinued. F:Interchangeable by set. K:Q'ty Change

Copyright (C) YANMAR CO., LTD. All RightsReserved.

Fig.8. CRANKSHAFT & PISTON

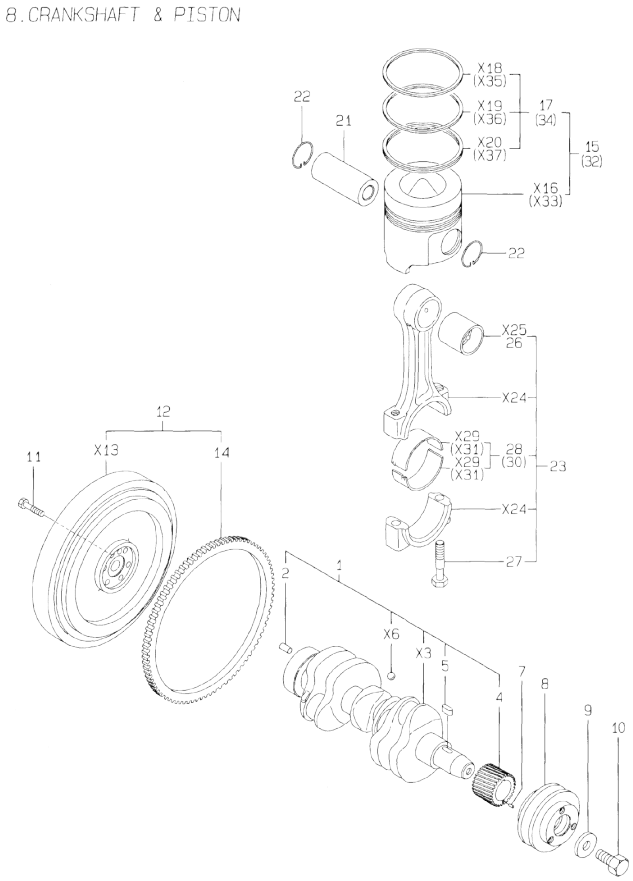

Remarks
(1) REPAIR PART.
(2) UNDER-SIZE(U.S=0.25)PART.
(3) OVER-SIZE(O.S=0.25)PART.

(A)=3TNE78A-NSR (D)=
(B)= (E)=
(C)= (F)=

No.	Lev.	Parts No.	Description	Q'ty (A)	(B)	(C)	(D)	(E)	(F)	I	R
1	1	119813-21000	CRANKSHAFT ASSY	1							
2	2	129100-01580	PIN, M8X16	1							
4	2	129150-21200	GEAR, CRANKSHAFT	1							
5	2	22512-070140	KEY, 7X 14	1							
7	1	22351-040010	PIN, SPRING 4.0X10	1							
8	1	171301-21650	V-PULLEY	1							
9	1	129795-21661	WASHER	1							
10	1	121850-21680	BOLT	1							
11	1	121111-21501	BOLT, FLYWHEEL	6							
12	1	119840-21590	FLYWHEEL ASSY	1							
14	2	119865-21600	GEAR, RING	1							
15	1	119818-22080	PISTON ASSY	3							
17	2	119818-22500	RING SET, PISTON	3							
21	1	119813-22300	PIN, PISTON	3							
22	1	129792-22400	CIRCLIP, 23	6							
23	1	719810-23100	ROD ASSY, CONNECTING	3							
26	2	119810-23910	BEARING, PISTON PIN	3							1
27	2	119810-23200	BOLT, CONNECTING ROD	6							
28	2	119810-23600	BEARING, CRANK PIN	3							
30	1	119810-23610	BEARING, 0.25 US	3							2
32	1	119818-22900	PISTON ASSY, 0.25 OS	3							3
34	2	119818-22950	RING SET, 0.25 OS	3							3

N:Old ◄Yes/No► New. Q:Old ◄No/Yes► New. R:Old ◄Yes/Yes► New. S:Old ◄No/No► New. W:Add. Z:Discontinued. F:Interchangeable by set. K:Q'ty Change

Copyright (C) YANMAR CO., LTD. All RightsReserved.

Fig.9. LUB.OIL SYSTEM

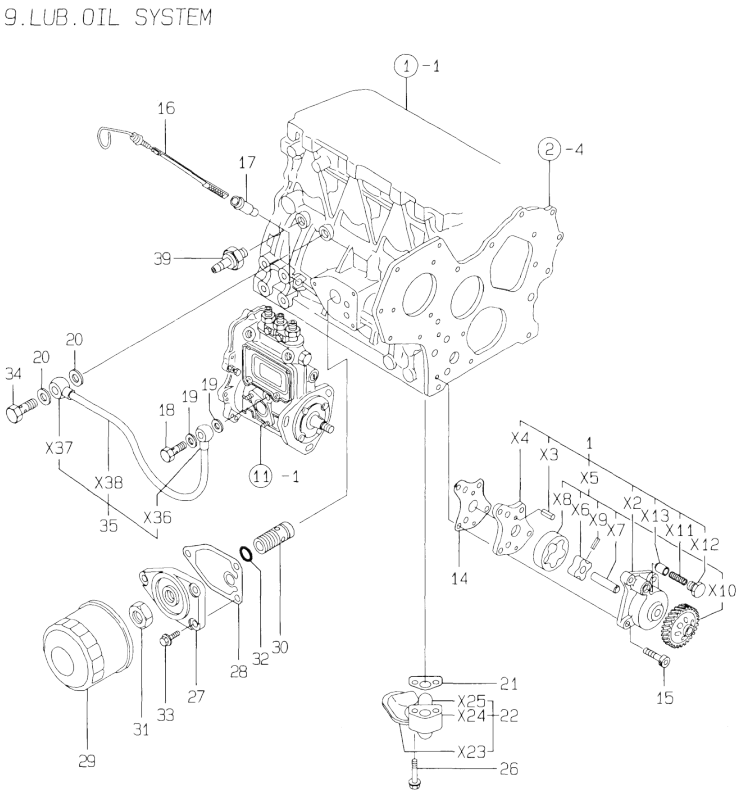

(A)=3TNE78A-NSR
(B)=
(C)=
(D)=
(E)=
(F)=

No.	Lev.	Parts No.	Description	Q'ty (A)	(B)	(C)	(D)	(E)	(F)	I	R
1	1	129001-32001	PUMP ASSY, OIL	1							
14	1	129150-32020	GASKET, PUMP	1							
15	1	26450-060252	BOLT, M6X 25	4							
16	1	119600-34800	DIPSTICK, OIL	1							
17	1	121520-34810	GUIDE, DIPSTICK	1							
18	1	124550-59820	BOLT, PIPE JOINT M8	1							
19	1	22190-080002	WASHER, SEAL 6	2							
20	1	23414-100000	GASKET, 10X1.0	2							
21	1	129150-35041	GASKET	1							
22	1	119810-35401	PIPE ASSY, OIL INLET	1							
26	1	26106-080352	BOLT, M8X 35 PLATED	2							
27	1	129150-35101	BRACKET, STRAINER	1							
28	1	129150-35111	GASKET	1							
29	1	129150-35151	FILTER, D80XL80	1							
30	1	129001-35300	BOLT, FILTER	1							
31	1	129150-35350	NUT	1							
32	1	24311-000160	O-RING, 1AP16.0	1							
33	1	26106-080202	BOLT, M8X 20 PLATED	3							
34	1	124160-39140	BOLT, PIPE JOINT M10	1							
35	1	119810-39200	PIPE ASSY, OIL	1							
39	1	121252-39450	SWITCH, 0.5KG	1							

N:Old ←Yes/No→ New. Q:Old ←No/Yes→ New. R:Old ←Yes/Yes→ New. S:Old ←No/No→ New. W:Add. Z:Discontinued. F:Interchangeable by set. K:Q'ty Change

Copyright (C) YANMAR CO., LTD. All RightsReserved.

Fig.10. COOLING WATER SYSTEM

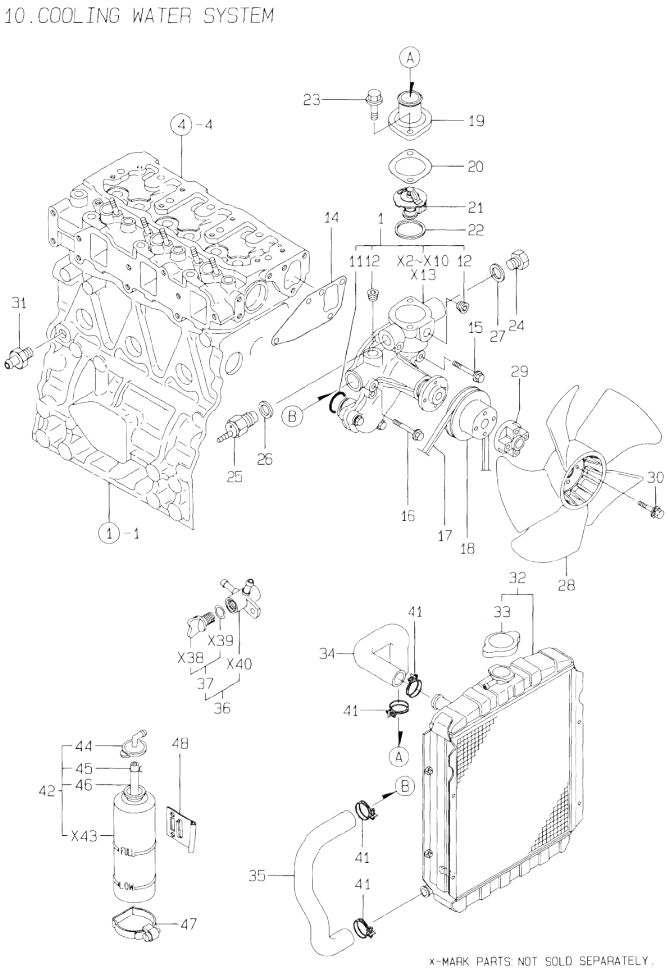

(A)=3TNE78A-NSR
(B)=
(C)=
(D)=
(E)=
(F)=

No.	Lev.	Parts No.	Description	Q'ty (A)	(B)	(C)	(D)	(E)	(F)	I	R
1	1	119810-42001	PUMP ASSY, WATER	1							
11	2	129150-42320	O-RING	1							
12	2	23871-030000	PLUG, R03	2							
14	1	129150-42020	GASKET, WATER PUMP	1							
15	1	26106-080352	BOLT, M8X 35 PLATED	1							
16	1	26106-080552	BOLT, M8X 55 PLATED	3							
17	1	25132-003800	V-BELT, A38	1							
18	1	129155-42350	V-PULLEY	1							
19	1	129350-49530	COVER, THERMOSTAT	1							
20	1	129795-49551	GASKET	1							
21	1	129155-49800	THERMOSTAT, 71	1							
22	1	129150-49811	GASKET, THERMOSTAT	1							
23	1	26106-080202	BOLT, M8X 20 PLATED	2							
24	1	121450-42450	PLUG, M16	1							
25	1	121250-44901	SWITCH, 110	1							
26	1	124465-44950	GASKET, 16	1							
27	1	124465-44950	GASKET, 16	1							
28	1	119258-44740	FAN, COOLING D300	1							
29	1	121267-44760	SPACER	1							
30	1	26106-060302	BOLT, M6X 30 PLATED	4							
31	1	121550-49111	JOINT, PT1/4	1							
32	1	119632-44500	RADIATOR	1							
33	2	124450-44590	CAP, RADIATOR	1							
34	1	119688-49010	PIPE, WATER	1							
35	1	119632-49020	PIPE, WATER	1							
36	1	129150-49100	COCK ASSY, 3-WAY	1							
37	2	129150-49080	COCK, DRAIN	1							
41	1	23010-038000	CLAMP, 38	4							
42	1	121252-44510	TANK ASSY, SUB	1							
44	2	121450-44530	CAP	1							
45	2	124450-44560	RETAINER	1							
46	2	23061-070230	PIPE, 7X 230	1							
47	1	124450-44550	BAND	1							
48	1	121256-44600	BRACKET, SUB TANK	1							

N:Old ←Yes/No→ New. Q:Old ←No/Yes→ New. R:Old ←Yes/Yes→ New. S:Old ←No/No→ New. W:Add. Z:Discontinued. F:Interchangeable by set. K:Q'ty Change

Copyright (C) YANMAR CO., LTD. All RightsReserved.

Fig.11. FUEL INJECTION PUMP

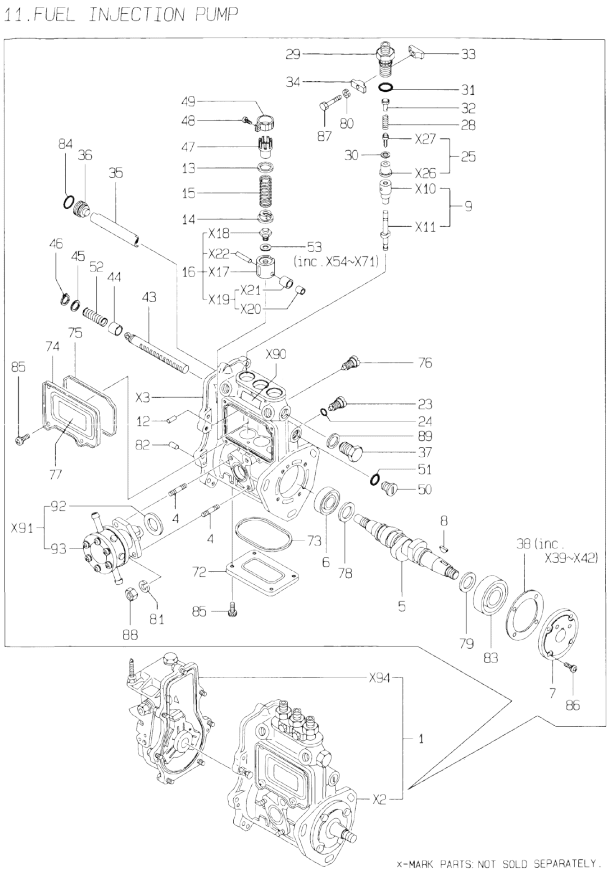

(A)=3TNE78A-NSR
(B)=
(C)=
(D)=
(E)=
(F)=

No.	Lev.	Parts No.	Description	Q'ty (A)	(B)	(C)	(D)	(E)	(F)	I	R
1	1	719910-51400	PUMP ASSY, INJECTION	1							1
4	3	129155-51020	STUD	2							
5	3	119810-51040	CAMSHAFT	1							
6	3	129155-51050	BEARING, 17BM001D	1							
7	3	129155-51060	SUPPORT, CAMSHAFT	1							
8	3	122710-51090	KEY	1							
9	3	129108-51100	PLUNGER ASSY	3							
12	3	129155-51140	PIN	3							
13	3	174307-51170	RETAINER, SPRING A	3							
14	3	129155-51180	RETAINER, SPRING	3							
15	3	124950-51190	SPRING, PLUNGER	3							
16	3	129155-51200	TAPPET ASSY	3							
23	3	129155-51270	STOPPER, TAPPET	3							
24	3	129155-51280	O-RING, S6	3							
25	3	129505-51300	VALVE ASSY, DELIVERY	3							
28	3	129155-51320	SPRING, DELIVERY	3							
29	3	129155-51340	RETAINER	3							
30	3	124550-51350	GASKET, DELIVERY	3							
31	3	124550-51370	O-RING	3							
32	3	129155-51370	STOPPER, VALVE	3							
33	3	129155-51380	STOPPER	2							
34	3	129155-51390	STOPPER	2							
35	3	129155-51400	DEFLECTOR	1							
36	3	129155-51410	BOLT	1							
37	3	129155-51420	PLUG, M16	1							
38	3	129155-51450	SHIM SET, ADJUSTING	1							
43	3	129155-51500	RACK, CONTROL	1							
44	3	129155-51521	BUSH, RACK	1							
45	3	129155-51530	SPACER	1							
46	3	129155-51540	CIRCLIP	1							
47	3	129155-51550	PINION, CONTROL	3							
48	3	122117-51560	SCREW	3							
49	3	174307-51560	PINION	3							
50	3	129155-51570	PLUG, M12	1							
51	3	129155-51580	O-RING	1							
52	3	129155-51591	SPRING, RACK	1							
53	3	129155-51600	SHIM SET, ADJUSTING	3							
72	3	129155-51700	COVER	1							
73	3	129155-51710	GASKET	1							
74	3	129155-51750	COVER	1							
75	3	129155-51760	GASKET	1							
76	3	129155-51790	STOOPER, RACK	1							
77	3	129156-51910	LABEL, CAUTION	1							
78	3	129155-51930	SPACER, T=3.25	1							
79	3	129155-51940	SPACER, T=1.5	1							
80	3	22217-050000	WASHER, SPRING 5	2							
81	3	22217-060000	WASHER, SPRING 6	2							
82	3	22351-050010	PIN, SPRING 5.0X10	2							
83	3	24101-063034	BEARING, BALL 6303	1							
84	3	24341-000160	O-RING, 1AS16.0	1							
85	3	26022-050102	SCREW, M5X10	8							

N:Old ←Yes/No→ New. Q:Old ←No/Yes→ New. R:Old ←Yes/Yes→ New. S:Old ←No/No→ New. W:Add. Z:Discontinued. F:Interchangeable by set. K:Q'ty Change

Remarks
(1) GOVERNOR ASSY(FIG.12) IS INCORPORATED IN THIS FOP.CMP (REF.NO.1).

++ CONTINUE ++

Copyright (C) YANMAR CO., LTD. All RightsReserved.

Fig.11. FUEL INJECTION PUMP

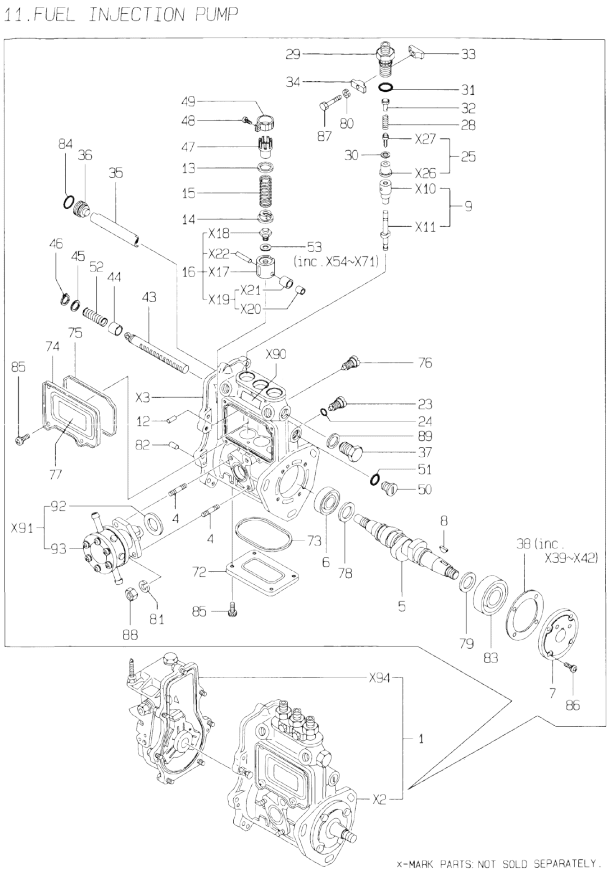

Remarks
(1) GOVERNOR ASSY(FIG.12) IS INCORPORATED IN THIS FOP.CMP (REF.NO.1).

(A)=3TNE78A-NSR (D)=
(B)= (E)=
(C)= (F)=

No.	Lev.	Parts No.	Description	Q'ty (A)	(B)	(C)	(D)	(E)	(F)	I	R
86	3	26022-060162	SCREW, M6X16	4							
87	3	26116-050302	BOLT, M5X 30 PLATED	2							
88	3	26716-060002	NUT, M6	2							
89	3	22190-160002	WASHER, SEAL 16	1							
92	3	129155-52050	GASKET	1							
93	3	129100-52100	PUMP ASSY, FUEL FEED	1							

N:Old ←Yes/No→ New. Q:Old ←No/Yes→ New. R:Old ←Yes/Yes→ New. S:Old ←No/No→ New. W:Add. Z:Discontinued. F:Interchangeable by set. K:Q'ty Change

Copyright (C) YANMAR CO., LTD. All RightsReserved.

Fig.12. GOVERNOR

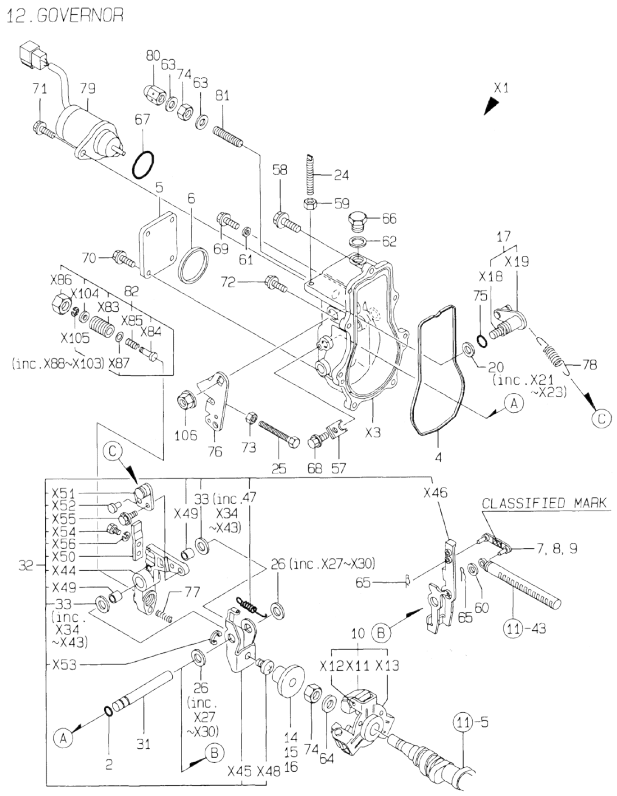

Remarks
(1) SELECTIVE PARTS: CERTAIN THE CLASSIFICATION MARK, THEN PLACE YOUR ORDER.(REFER TO ILLUSTRATION).
(2) SELECTIVE PARTS.
* THIS FIGURE(GOVERNOR ASSY)IS INCORPORATED IN THE FUEL INJECTION PUMP ASSY(FIG.11).

(A)=3TNE78A-NSR (D)=
(B)= (E)=
(C)= (F)=

No.	Lev.	Parts No.	Description	Q'ty (A)	(B)	(C)	(D)	(E)	(F)	I	R
2	2	129155-51280	O-RING, S6	1							
4	2	129052-61050	GASKET	1							
5	2	129052-61060	COVER, GOVERNOR CASE	1							
6	2	129052-61070	GASKET	1							
7	2	129155-61120	LINK, L=30 MARK 0	1							1
8	2	129155-61130	LINK, L=31 MARK 1	1							1
9	2	129155-61140	LINK, L=30.5 MARK 05	1							1
10	2	129155-61201	WEIGHT ASSY,GOVERNOR	1							
14	2	129155-61341	SLEEVE	1							2
15	2	129155-61350	SLEEVE, L=24.9	1							2
16	2	129155-61360	SLEEVE, L=25.2	1							2
17	2	129100-61400	SHAFT ASSY	1							
20	2	129155-61430	SPACER	1							
24	2	129155-61450	BOLT, LIMITER	1							
25	2	129155-61460	BOLT, IDLE	1							
26	2	129155-61480	SPACER ASSY	2							
31	2	129052-61390	SHAFT	1							
32	2	129052-61500	LEVER ASSY, GOVERNOR	1							
33	3	174307-51700	SHIM SET	2							
47	3	129052-61540	SPRING, SET	1							
57	2	119660-61901	RETAINER, SHAFT	1							
58	2	129155-61950	BOLT	1							
59	2	124550-66370	NUT, M6	1							
60	2	22117-040000	WASHER, 4	1							
61	2	22190-060002	WASHER, SEAL 6	1							
62	2	22190-100002	WASHER, SEAL 10	1							
63	2	22190-120002	WASHER, SEAL 12	2							
64	2	22287-120000	WASHER, 12	1							
65	2	22372-040000	PIN, SNAP 4	2							
66	2	23887-100002	PLUG, 10	1							
67	2	24341-000280	O-RING, 1AS28.0	1							
67-1	2	158552-61900	O-RING	1						N	
	(A=EXXXXX)										
68	2	26106-060102	BOLT, M6X 10 PLATED	1							
69	2	26106-060102	BOLT, M6X 10 PLATED	1							
70	2	26106-060102	BOLT, M6X 10 PLATED	4							
71	2	26106-060142	BOLT, M6X 14 PLATED	2							
72	2	26106-060202	BOLT, M6X 20 PLATED	6							
73	2	26756-060002	NUT, LOCK M6	1							
74	2	26776-120002	NUT, LOCK M12	2							
75	2	129155-61830	O-RING, S10	1							
76	1	129100-61440	LEVER, CONTROL	1							
77	1	129100-61650	SPRING, CONTROLLER	1							
78	1	171353-61710	SPRING, GOVERNOR	1							
79	1	119653-77950	SOLENOID, STOP	1							
80	1	26687-120002	NUT, CAP M12	1							
81	1	129155-61470	BOLT, CONTROL	1							
82	1	171353-61550	ANGLEICH ASSY	1							
106	1	26366-080002	NUT, M8	1							

N:Old ←Yes/No→ New. Q:Old ←No/Yes→ New. R:Old ←Yes/Yes→ New. S:Old ←No/No→ New. W:Add. Z:Discontinued. F:Interchangeable by set. K:Q'ty Change

Copyright (C) YANMAR CO., LTD. All RightsReserved.

Fig.13. FUEL INJECTION VALVE

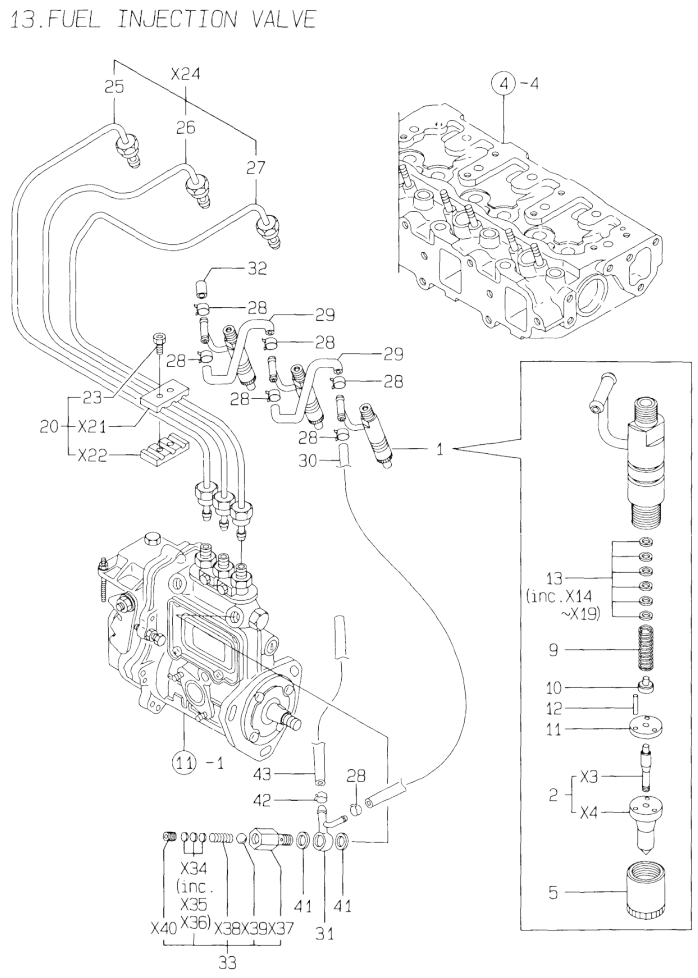

(A)=3TNE78A-NSR
(B)=
(C)=
(D)=
(E)=
(F)=

No.	Lev.	Parts No.	Description	Q'ty (A)	(B)	(C)	(D)	(E)	(F)	I	R
1	1	719810-53100	VALVE ASSY,INJECTION	3							
2	2	119810-53000	VALVE ASSY,INJECTION	3							
5	2	114250-53080	NUT, NOZZLE D16.95	3							
9	2	114250-53120	SPRING, NOZZLE	3							
10	2	114250-53130	SEAT, SPRING	3							
11	2	114250-53140	PLATE	3							
12	2	114250-53210	PIN	6							
13	2	114250-53400	SHIM SET	3							
20	1	129150-59120	RETAINER, PIPE	1							
23	2	129150-59131	BOLT, M4X14	2							
25	2	119810-59810	PIPE ASSY, INJECTION	1							
26	2	119810-59820	PIPE ASSY, INJECTION	1							
27	2	119810-59830	PIPE ASSY, INJECTION	1							
28	1	124066-59100	CLIP, HOSE 8	7							
29	1	121250-59550	PIPE, FUEL D8X120	2							
30	1	119840-59560	PIPE, FUEL RETURN	1							
31	1	119840-59570	JOINT	1							
32	1	129150-59580	CAP	1							
33	1	129100-59951	VALVE ASSY, CHECK	1							
41	1	23414-120000	GASKET, 12X1.0	2							
42	1	124766-59050	CLIP, HOSE 12	2							
43	1	105025-59750	PIPE, FUEL	1							

N:Old ←Yes/No→ New. Q:Old ←No/Yes→ New. R:Old ←Yes/Yes→ New. S:Old ←No/No→ New. W:Add. Z:Discontinued. F:Interchangeable by set. K:Q'ty Change

Copyright (C) YANMAR CO., LTD. All RightsReserved.

Fig.14. FUEL LINE

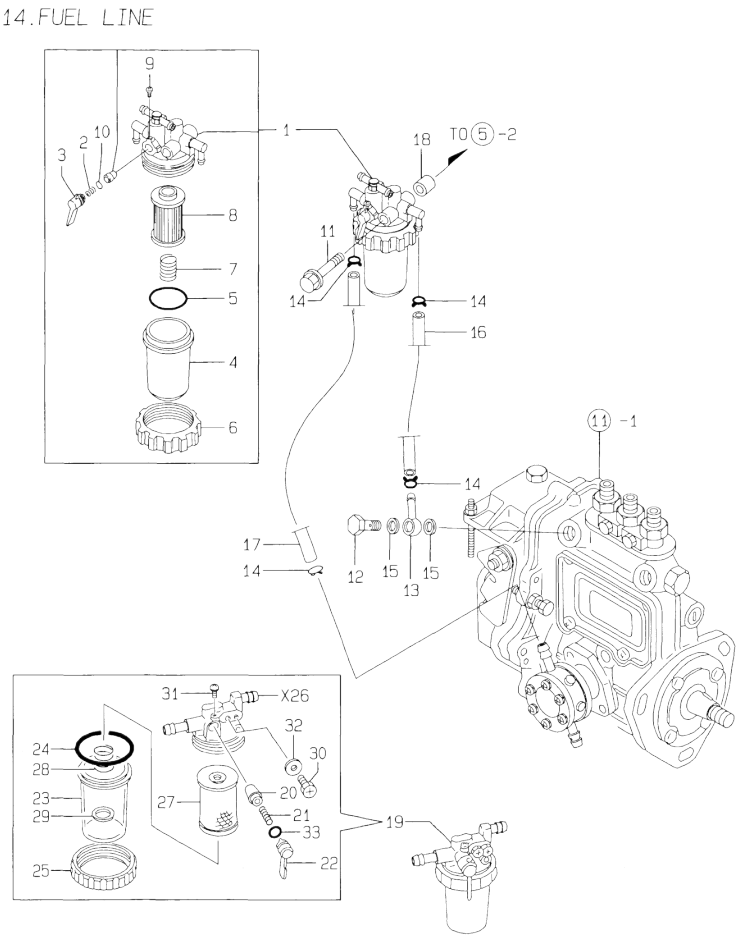

(A)=3TNE78A-NSR
(B)=
(C)=
(D)=
(E)=
(F)=

No.	Lev.	Parts No.	Description	Q'ty (A)	(B)	(C)	(D)	(E)	(F)	I	R
1	1	119833-55620	FILTER ASSY, FUEL	1							
2	2	104200-55330	SPRING, VALVE	1							
3	2	119810-55340	LEVER	1							
4	2	121254-55510	COVER	1							
5	2	102103-55520	O-RING	1							
6	2	110250-55610	RING, RETAINING	1							
7	2	121250-55620	SPRING	1							
8	2	119810-55650	ELEMENT	1							
9	2	104200-55750	SCREW, M4	1							
10	2	24311-240100	O-RING, 1AP10A	1							
11	1	26014-080852	BOLT, M8X 85	1							
12	1	103854-39140	BOLT, PIPE JOINT	1							
13	1	101304-59020	JOINT, PIPE 12	1							
14	1	124766-59050	CLIP, HOSE 12	4							
15	1	22190-120002	WASHER, SEAL 12	2							
16	1	129555-59510	PIPE, D13/7.5X180	1							
17	1	105025-59750	PIPE, FUEL	1							
18	1	129411-55690	SPACER	1							
19	1	121850-55800	SEPARATOR ASSY,WATER	1							
20	2	104200-55321	VALVE, TAPER	1							
21	2	104200-55330	SPRING, VALVE	1							
22	2	104200-55341	HANDLE	1							
23	2	121254-55510	COVER	1							
24	2	102103-55520	O-RING	1							
25	2	110250-55610	RING, RETAINING	1							
27	2	121850-55710	SCREEN	1							
28	2	121257-55720	SPRING	1							
29	2	121257-55731	FLOAT	1							
30	2	101720-55750	PLUG, 6	2							
31	2	104200-55750	SCREW, M4	1							
32	2	23418-060000	GASKET, 6X1.0	2							
33	2	24311-240100	O-RING, 1AP10A	1							

N:Old ←Yes/No→ New. Q:Old ←No/Yes→ New. R:Old ←Yes/Yes→ New. S:Old ←No/No→ New. W:Add. Z:Discontinued. F:Interchangeable by set. K:Q'ty Change

Copyright (C) YANMAR CO., LTD. All RightsReserved.

Fig.15. STARTING MOTOR

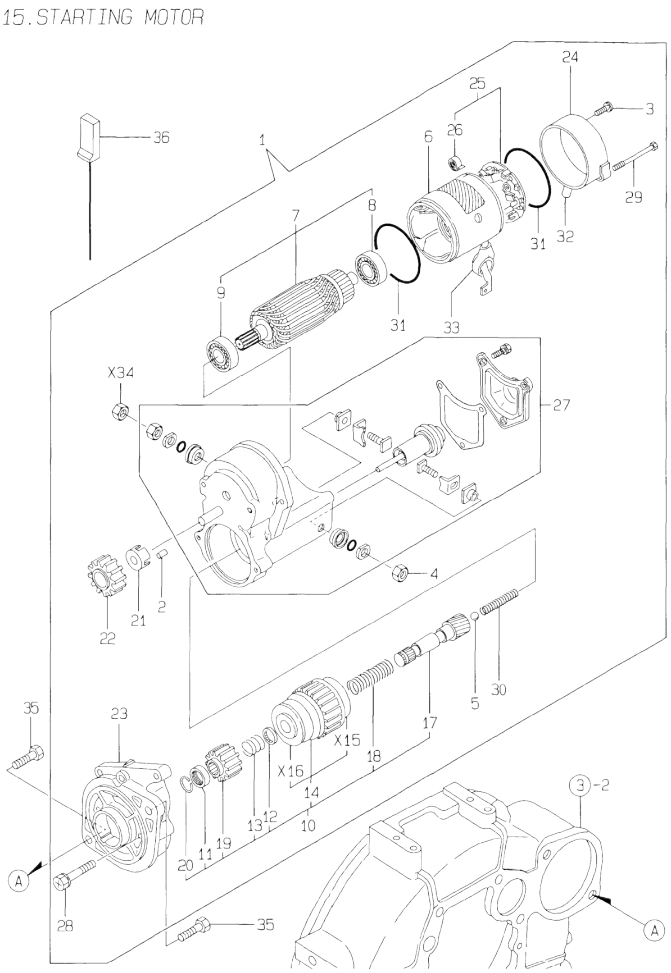

(A)=3TNE78A-NSR (D)=
(B)= (E)=
(C)= (F)=

No.	Lev.	Parts No.	Description	Q'ty (A)	(B)	(C)	(D)	(E)	(F)	I	R
1	1	129129-77010	STARTER ASSY	1							
2	2	X0283060061	ROLLER	5							
3	2	129129-77460	SCREW	2							
4	2	X9490561370	NUT	1							
5	2	X9491200240	BALL	1							
6	2	129129-77210	YOKE ASSY	1							
7	2	129129-77220	ARMATURE ASSY	1							
8	3	129129-77230	BEARING	1							
9	3	129129-77240	BEARING	1							
10	2	129129-77250	STARTER	1							
11	3	X0280210230	NUT	1							
12	3	X0283270140	RETAINER	1							
13	3	X9491703371	SPRING, COIL	1							
14	3	129129-77390	CLUTCH ASSY, STARTER	1							
17	3	129129-77400	SHAFT	1							
18	3	129129-77410	SPRING, COIL	1							
19	3	129129-77420	PINION	1							
20	3	129129-77430	RING	1							
21	2	129129-77260	RETAINER	1							
22	2	129129-77270	PINION	1							
23	2	129129-77280	HOUSING	1							
24	2	129129-77290	FRAME	1							
25	2	129129-77300	HOLDER ASSY	1							
26	3	X9491730461	SPRING	4							
27	2	129129-77310	SWITCH ASSY	1							
28	2	129129-77320	BOLT	2							
29	2	129129-77330	BOLT	2							
30	2	129129-77340	SPRING	1							
31	2	129129-77350	O-RING	2							
32	2	129129-77362	COVER	1							
33	2	129129-77380	CAP	1							
35	1	26116-120252	BOLT, M12X 25 PLATED	2							
36	1	119643-77900	CONNECTOR, STARTER	1							

N:Old ←Yes/No→ New. Q:Old ←No/Yes→ New. R:Old ←Yes/Yes→ New. S:Old ←No/No→ New. W:Add. Z:Discontinued. F:Interchangeable by set. K:Q'ty Change

Copyright (C) YANMAR CO., LTD. All RightsReserved.

Fig.16. GENERATOR

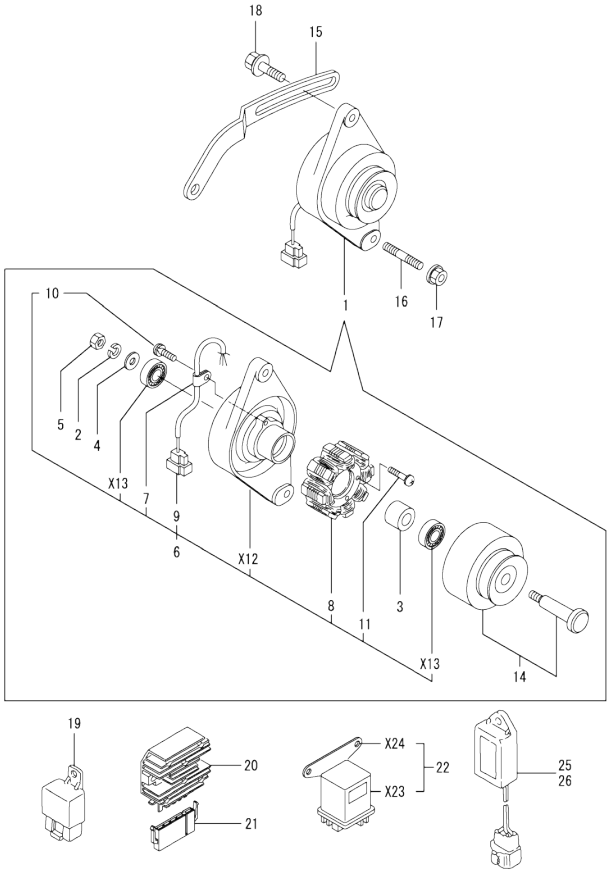

x-MARK PARTS:NOT SOLD SEPARATELY.

(A)=3TNE78A-NSR (D)=
(B)= (E)=
(C)= (F)=

No.	Lev.	Parts No.	Description	Q'ty (A)	(B)	(C)	(D)	(E)	(F)	I	R
1	1	129150-77202	GENERATOR	1							
1-1	1	129150-77203	DINAMO ASSY	1						N	
	(A=EXXXXX)										
2	2	XM219230000	WASHER, SPRING	1							
3	2	XM329830000	COLLAR	1							
4	2	XM860250000	WASHER, 10	1							
5	2	XM863720000	NUT	1							
6	2	129150-77210	PLATE ASSY	1							
7	3	XM069000000	CLAMP	1							
8	3	XM081780000	STATOR	1							
9	3	XM178780000	COUPLER	1							
10	3	XYSPS400800	SCREW	1							
11	3	XYSPS402400	SCREW	2							
14	2	129150-77230	FLYWHEEL ASSY	1							
14-1	2	129150-77280	FLYWHEEL ASSY	1						N	
	(A=EXXXXX)										
15	1	119823-77330	ADJUSTER	1							
16	1	121450-01570	BOLT, STUD	1							
17	1	26366-100002	NUT, M10	1							
18	1	119810-77340	BOLT, ADJUST L=30	1							
19	1	119247-77100	RELAY, POWER	1							
20	1	129150-77710	LIMITER, CURRENT 20A	1							
21	1	171301-77720	COUPLER	1							
22	1	119650-77910	RELAY ASSY, GLOW	1							
25	1	119632-77920	TIMER	1							
26	1	128300-77920	TIMER	1							

N:Old ←Yes/No→ New. Q:Old ←No/Yes→ New. R:Old ←Yes/Yes→ New. S:Old ←No/No→ New. W:Add. Z:Discontinued. F:Interchangeable by set. K:Q'ty Change

Copyright (C) YANMAR CO., LTD. All RightsReserved.

Fig.17. GASKET SET

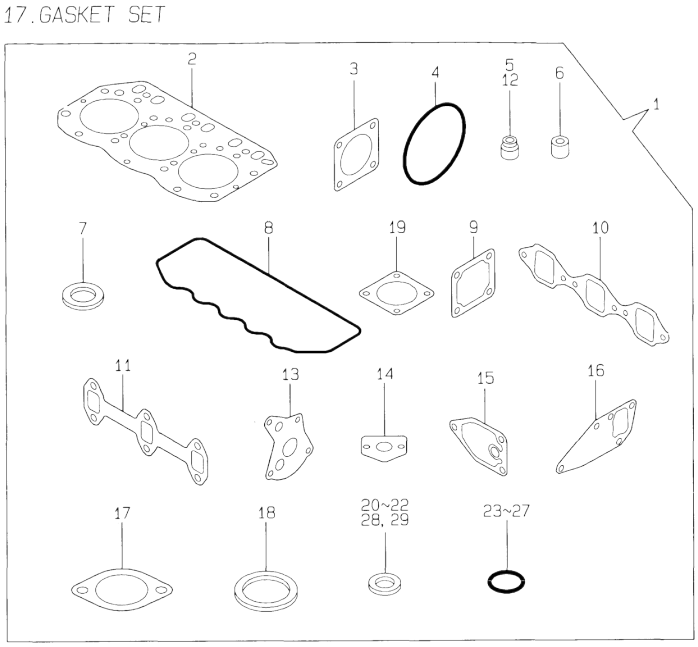

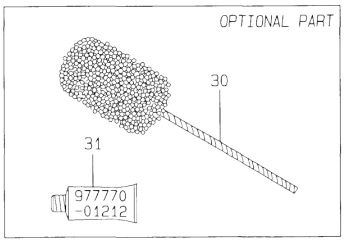

Remarks
(1) OPTIONAL PART.

(A)=3TNE78A-NSR (D)=
(B)= (E)=
(C)= (F)=

No.	Lev.	Parts No.	Description	Q'ty (A)	(B)	(C)	(D)	(E)	(F)	I	R
1	1	719818-92640	GASKET SET	1							1
2	2	119818-01330	GASKET, HEAD	1							
3	2	124240-01883	GASKET	3							
4	2	121850-51960	O-RING	1							
5	2	124160-11340	SEAL, VALVE STEM	3							
6	2	119625-11870	PROTECTOR, NOZZLE	3							
7	2	119625-11880	SEAT, NOZZLE	3							
8	2	119865-11310	GASKET, BONNET	1							
9	2	129150-77511	GASKET	1							
10	2	119810-12111	GASKET, MANIFOLD	1							
11	2	119810-13110	GASKET	1							
12	2	124950-11340	SEAL, VALVE STEM	3							
13	2	129150-32020	GASKET, PUMP	1							
14	2	129150-35041	GASKET	1							
15	2	129150-35111	GASKET	1							
16	2	129150-42020	GASKET, WATER PUMP	1							
17	2	129795-49551	GASKET	1							
18	2	129150-49811	GASKET, THERMOSTAT	1							
19	2	124701-11911	GASKET, SILENCER	2							
20	2	124465-44950	GASKET, 16	2							
21	2	22190-120002	WASHER, SEAL 12	2							
22	2	23414-120000	GASKET, 12X1.0	2							
23	2	24311-000120	O-RING, 1AP12.0	3							
24	2	24311-000160	O-RING, 1AP16.0	3							
25	2	24311-000320	O-RING, 1AP32.0	3							
26	2	24341-000240	O-RING, 1AS24.0	1							
27	2	24341-000500	O-RING, 1AS50.0	1							
28	2	23414-100000	GASKET, 10X1.0	2							
29	2	22190-080002	WASHER, SEAL 6	7							
30	1	129400-92420	FLEX HORN	1							1
31	1	977770-01212	GASKET, LIQUID	1							1

N:Old ←Yes/No→ New. Q:Old ←No/Yes→ New. R:Old ←Yes/Yes→ New. S:Old ←No/No→ New. W:Add. Z:Discontinued. F:Interchangeable by set. K:Q'ty Change

Copyright (C) YANMAR CO., LTD. All RightsReserved.

Parts No. Index

Parts No.	Fig. No.	Ref. No.
101304-59020	14	13
101720-55750	14	30
102103-55520	14	5
		24
103854-39140	14	12
104200-55321	14	20
104200-55330	14	2
		21
104200-55341	14	22
104200-55750	14	9
		31
104211-11180	4	14
104211-11370	4	18
105025-59750	13	43
	14	17
110250-55610	14	6
		25
114250-53080	13	5
114250-53120	13	9
114250-53130	13	10
114250-53140	13	11
114250-53210	13	12
114250-53400	13	13
119131-18320	6	4
119233-12620	5	27
119247-77100	16	19
119258-44740	10	28
119332-13502	6	8
119600-34800	9	16
119620-01750	3	3
119620-02020	1	12
119625-11870	4	19
	17	6
119625-11880	4	20
	17	7
119625-11900	4	21
119632-44500	10	32
119632-49020	10	35
119632-77920	16	25
119640-01640	3	8
119641-12570	5	26
119643-77900	15	36
119650-77910	16	22
119653-77950	12	79
119660-61901	12	57
119688-49010	10	34
119810-01200	1	21
119810-01730	3	6
119810-01780	3	16
119810-01790	3	7

Parts No.	Fig. No.	Ref. No.
119810-02800	1	15
119810-02870	1	23
119810-02930	1	18
119810-02940	1	26
119810-11100	4	11
119810-11110	4	12
119810-11120	4	13
119810-11240	4	24
119810-12111	5	1
	17	10
119810-13100	6	1
119810-13110	6	2
	17	11
119810-14400	7	2
119810-14580	7	3
119810-23200	8	27
119810-23600	8	28
119810-23610	8	30
119810-23910	8	26
119810-35401	9	22
119810-39200	9	35
119810-42001	10	1
119810-51040	11	5
119810-53000	13	2
119810-55340	14	3
119810-55650	14	8
119810-59810	13	25
119810-59820	13	26
119810-59830	13	27
119810-77340	16	18
119812-11700	4	4
119813-21000	8	1
119813-22300	8	21
119818-01330	1	22
	17	2
119818-22080	8	15
119818-22500	8	17
119818-22900	8	32
119818-22950	8	34
119823-77330	16	15
119833-55620	14	1
119836-12810	5	15
119840-12210	5	7
119840-12500	5	8
119840-12650	5	10
119840-21590	8	12
119840-59560	13	30
119840-59570	13	31
119865-11210	4	23
119865-11310	4	44

Parts No.	Fig. No.	Ref. No.
119865-11310	17	8
119865-21600	8	14
121023-01550	2	24
121111-21501	8	11
121120-12541	5	12
121120-12561	5	13
121120-12571	5	14
121250-44901	10	25
121250-55620	14	7
121250-59550	13	29
121252-39450	9	39
121252-44510	10	42
121254-55510	14	4
		23
121256-44600	10	48
121257-55720	14	28
121257-55731	14	29
121267-44760	10	29
121450-01560	2	5
121450-01570	16	16
121450-42450	10	24
121450-44530	10	44
121520-34810	9	17
121550-49111	10	31
121850-21680	8	10
121850-51960	2	12
	17	4
121850-55710	14	27
121850-55800	14	19
121855-12060	5	25
122117-51560	11	48
122710-51090	11	8
124060-11800	4	7
124066-59100	13	28
124160-01751	2	6
	4	50
124160-01910	1	4
		14
124160-11340	4	16
	17	5
124160-11360	4	48
124160-39140	9	34
124240-01871	2	7
124240-01883	2	8
	17	3
124450-44550	10	47
124450-44560	10	45
124450-44590	10	33
124465-44950	10	26
		27

Parts No.	Fig. No.	Ref. No.
124465-44950	17	20
124550-51350	11	30
124550-51370	11	31
124550-59820	9	18
124550-66370	12	59
124701-11911	6	7
	17	19
124736-07900	4	2
124766-59050	13	42
	14	14
124950-11340	4	17
	17	12
124950-51190	11	15
126650-12680	5	28
128300-77920	16	26
129001-32001	9	1
129001-35300	9	30
129001-91840	2	20
129052-61050	12	4
129052-61060	12	5
129052-61070	12	6
129052-61390	12	31
129052-61500	12	32
129052-61540	12	47
129100-01580	3	1
		13
	8	2
129100-25061	7	9
129100-52100	11	93
129100-59951	13	33
129100-61400	12	17
129100-61440	12	76
129100-61650	12	77
129107-13550	6	9
129108-51100	11	9
129120-77501	5	4
129129-77010	15	1
129129-77210	15	6
129129-77220	15	7
129129-77230	15	8
129129-77240	15	9
129129-77250	15	10
129129-77260	15	21
129129-77270	15	22
129129-77280	15	23
129129-77290	15	24
129129-77300	15	25
129129-77310	15	27
129129-77320	15	28
129129-77330	15	29

Parts No. Index

Parts No.	Fig. No.	Ref. No.
129129-77340	15	30
129129-77350	15	31
129129-77362	15	32
129129-77380	15	33
129129-77390	15	14
129129-77400	15	17
129129-77410	15	18
129129-77420	15	19
129129-77430	15	20
129129-77460	15	3
129132-12570	5	21
129132-12581	5	19
129132-12800	5	22
129132-12860	5	24
129132-12890	5	16
129132-12900	5	17
129150-02450	7	4
129150-03020	4	40
129150-03070	4	41
129150-03080	4	42
129150-03100	2	10
129150-11230	4	31
129150-11280	4	29
129150-11750	4	33
129150-14101	7	6
129150-14200	7	1
129150-21200	8	4
129150-25101	7	10
129150-25900	7	15
129150-25920	7	13
129150-32020	9	14
	17	13
129150-35041	9	21
	17	14
129150-35101	9	27
129150-35111	9	28
	17	15
129150-35151	9	29
129150-35350	9	31
129150-42020	10	14
	17	16
129150-42320	10	11
129150-49080	10	37
129150-49100	10	36
129150-49811	10	22
	17	18
129150-59120	13	20
129150-59131	13	23
129150-59580	13	32
129150-77202	16	1

Parts No.	Fig. No.	Ref. No.
129150-77203	16	1 -1
129150-77210	16	6
129150-77230	16	14
129150-77280	16	14 -1
129150-77511	5	5
	17	9
129150-77710	16	20
129155-11260	4	27
129155-11270	4	28
129155-42350	10	18
129155-49800	10	21
129155-51020	11	4
129155-51050	11	6
129155-51060	11	7
129155-51140	11	12
129155-51180	11	14
129155-51200	11	16
129155-51270	11	23
129155-51280	11	24
	12	2
129155-51320	11	28
129155-51340	11	29
129155-51370	11	32
129155-51380	11	33
129155-51390	11	34
129155-51400	11	35
129155-51410	11	36
129155-51420	11	37
129155-51450	11	38
129155-51500	11	43
129155-51521	11	44
129155-51530	11	45
129155-51540	11	46
129155-51550	11	47
129155-51570	11	50
129155-51580	11	51
129155-51591	11	52
129155-51600	11	53
129155-51700	11	72
129155-51710	11	73
129155-51750	11	74
129155-51760	11	75
129155-51790	11	76
129155-51930	11	78
129155-51940	11	79
129155-52050	11	92
129155-61120	12	7
129155-61130	12	8
129155-61140	12	9
129155-61201	12	10

Parts No.	Fig. No.	Ref. No.
129155-61341	12	14
129155-61350	12	15
129155-61360	12	16
129155-61430	12	20
129155-61450	12	24
129155-61460	12	25
129155-61470	12	81
129155-61480	12	26
129155-61830	12	75
129155-61950	12	58
129156-51910	11	77
129350-12660	5	11
129350-12900	5	9
129350-49530	10	19
129400-01520	2	4
129400-92420	17	30
129411-55690	14	18
129486-01670	3	17
129505-51300	11	25
129555-59510	14	16
129612-01600	3	2
129792-22400	8	22
129795-01800	2	3
129795-01950	2	9
129795-02411	1	13
129795-21661	8	9
129795-49551	10	20
	17	17
158552-61900	12	67 -1
171031-11741	2	27
171051-01921	1	5
171301-12701	5	2
171301-21650	8	8
171301-77720	16	21
171353-61550	12	82
171353-61710	12	78
174307-51170	11	13
174307-51560	11	49
174307-51700	12	33
22117-040000	12	60
22190-060002	12	61
22190-080002	2	11
		22
	9	19
	17	29
22190-100002	12	62
22190-120002	12	63
	14	15
	17	21
22190-160002	11	89

Parts No.	Fig. No.	Ref. No.
22190-220002	3	10
22217-050000	11	80
22217-060000	11	81
22217-120000	7	16
22287-120000	12	64
22351-040010	8	7
22351-050010	11	82
22351-060012	4	22
22372-040000	12	65
22512-070140	7	7
	8	5
23000-060000	5	18
23010-038000	10	41
23061-070230	10	46
23065-160800	4	1
23414-100000	9	20
	17	28
23414-120000	13	41
	17	22
23418-060000	14	32
23871-010000	1	6
23871-030000	10	12
23887-100002	12	66
24101-063034	11	83
24311-000120	4	49
	17	23
24311-000160	2	13
	9	32
	17	24
24311-000320	2	14
		28
	4	51
	17	25
24311-240100	14	10
		33
24341-000160	11	84
24341-000240	2	25
	17	26
24341-000280	12	67
24341-000500	4	46
	17	27
25132-003800	10	17
26014-080852	14	11
26022-050102	11	85
26022-060162	11	86
26106-060102	12	68
		69
		70
26106-060122	2	26
26106-060142	12	71

Parts No. Index

Parts No.	Fig. No.	Ref. No.
26106-060202	12	72
26106-060302	10	30
26106-080122	2	15
26106-080142	4	3
	7	8
26106-080162	2	16
		23
	3	11
	4	47
26106-080202	2	17
	9	33
	10	23
26106-080252	4	35
	5	3
26106-080352	3	18
	5	6
	9	26
	10	15
26106-080452	2	18
	3	12
	7	14
26106-080502	4	36
26106-080552	2	19
	10	16
26106-080602	6	5
26116-050302	11	87
26116-120252	15	35
26206-100252	3	4
26206-100302	3	5
26216-060302	4	9
26216-080602	6	6
26226-080182	4	34
26366-060002	4	37
26366-080002	2	21
	6	3
	12	106
26366-100002	16	17
26450-060252	9	15
26687-120002	12	80
26716-060002	11	88
26716-120002	7	17
26756-060002	12	73
26776-120002	12	74
27231-500000	1	7
27241-120000	1	8
27241-300000	1	9
27241-400000	4	10
27310-070001	4	15
719810-01500	2	1
719810-01650	3	14

Parts No.	Fig. No.	Ref. No.
719810-11520	4	38
719810-11660	4	30
719810-23100	8	23
719810-53100	13	1
719818-92640	17	1
719822-01560	1	1
719910-51400	11	1
977770-01212	2	29
	3	19
	17	31
X0280210230	15	11
X0283060061	15	2
X0283270140	15	12
X9490561370	15	4
X9491200240	15	5
X9491703371	15	13
X9491730461	15	26
XM069000000	16	7
XM081780000	16	8
XM178780000	16	9
XM219230000	16	2
XM329830000	16	3
XM860250000	16	4
XM863720000	16	5
XYSPS400800	16	10
XYSPS402400	16	11

Parts No.	Fig. No.	Ref. No.

Parts No.	Fig. No.	Ref. No.