YANMAR

PARTS CATALOG

0CD10-M57300EN

Last update Sep., 2015

PREFACE

This parts catalog is the 1st edition of 3TNE82A-DG for Denyo Co., Ltd.

Published : June, 1996

Contents

0CD10-M57300

Fig. No.	Fig. Name
3TNE82A-DG	
1.	CYLINDER BLOCK
2.	GEAR HOUSING
3.	FLYWHEEL HOUSING & OIL SUMP
4.	CYLINDER HEAD & BONNET
5.	SUCTION MANIFOLD
6.	EXHAUST MANIFOLD
7.	CAMSHAFT & DRIVING GEAR
8.	CRANKSHAFT & PISTON
9.	LUB.OIL SYSTEM
10.	COOLING WATER SYSTEM
11.	FUEL INJECTION PUMP
12.	GOVERNOR
13.	FUEL INJECTION VALVE
14.	FUEL FILTER
15.	STARTING MOTOR
16.	GENERATOR
17.	ELECTRIC PARTS
18.	GASKET SET

Fig.1. CYLINDER BLOCK

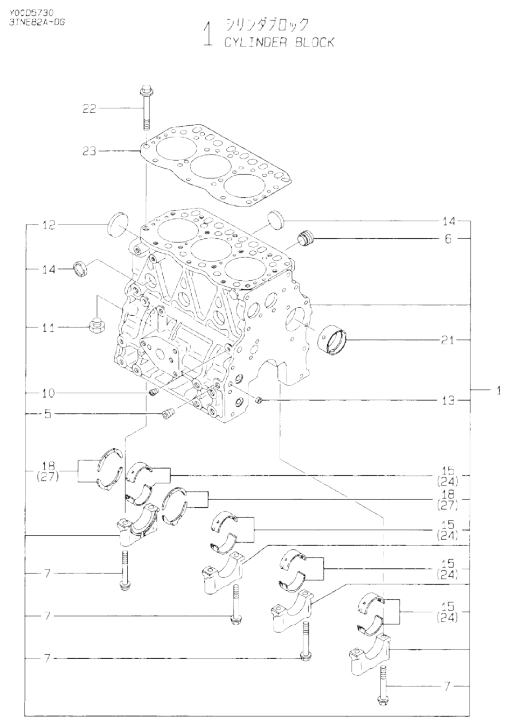

(A)=3TNE82A-DG (D)=
(B)= (E)=
(C)= (F)=

No.	Lev.	Parts No.	Description	Q'ty (A)	(B)	(C)	(D)	(E)	(F)	I	R
1	1	719813-01560	BLOCK ASSY, CYLINDER	1							
5	2	124160-01910	PLUG, PT1/4	2							
6	2	171051-01921	PLUG, NPTF1	1							
7	2	119620-02020	BOLT, METAL CAP	8							
10	2	23871-010000	PLUG, R01	1							
11	2	23887-120002	PLUG, 12	1							
12	2	27231-500000	PLUG 50	1							
13	2	27241-120000	PLUG, 12	2							
14	2	27241-300000	PLUG 30	6							
15	2	119810-02800	BEARING, MAIN	4							
18	2	119810-02930	BEARING, THRUST	1							
21	2	129795-02411	BUSH, CAMSHAFT	1							
22	1	119810-01200	BOLT, HEAD	14							
23	1	119812-01330	GASKET, HEAD	1							
24	1	119810-02870	BEARING, 0.25 US	4							1
27	1	119810-02940	BEARING, THRUST 0.25	2							2

Remarks
(1) UNDER-SIZE(U.S=0.25)PART.
(2) OVER-SIZE(O.S=0.25)PART.

N:Old $\frac{\text{Yes}}{\text{No}}$ New. Q:Old $\frac{\text{No}}{\text{Yes}}$ New. R:Old $\frac{\text{Yes}}{\text{Yes}}$ New. S:Old $\frac{\text{No}}{\text{No}}$ New. W:Add. Z:Discontinued. F:Interchangeable by set. K:Q'ty Change

Copyright (C) YANMAR CO., LTD. All RightsReserved.

Fig.2. GEAR HOUSING

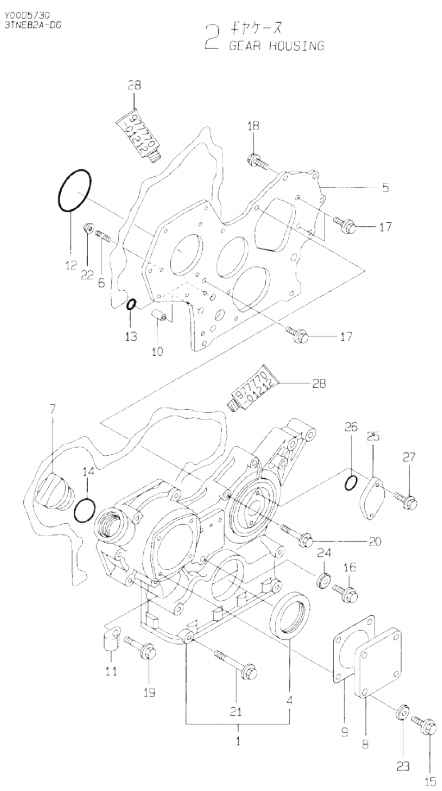

(A)=3TNE82A-DG
(B)=
(C)=
(D)=
(E)=
(F)=

No.	Lev.	Parts No.	Description	Q'ty (A)	(B)	(C)	(D)	(E)	(F)	I	R
1	1	719810-01500	CASE ASSY, GEAR	1							
4	2	129795-01800	SEAL, OIL	1							
5	1	129400-01520	FLANGE, GEAR CASE	1							
6	1	121450-01560	STUD, M8X22	3							
7	1	124160-01751	COVER, FILLER	1							
8	1	124240-01871	COVER	1							
9	1	124240-01883	GASKET	1							
10	1	129795-01950	PIPE, KNOCK L=18	2							
11	1	129150-03100	RETAINER, PIPE	1							
12	1	121850-51960	O-RING	1							
13	1	24311-000160	O-RING, 1AP16.0	2							
14	1	24311-000320	O-RING, 1AP32.0	1							
15	1	26106-080122	BOLT, M8X 12 PLATED	4							
16	1	26106-080162	BOLT, M8X 16 PLATED	1							
17	1	26106-080162	BOLT, M8X 16 PLATED	3							
18	1	26106-080202	BOLT, M8X 20 PLATED	2							
19	1	26106-080452	BOLT, M8X 45 PLATED	6							
20	1	26106-080552	BOLT, M8X 55 PLATED	3							
21	1	26106-080852	BOLT, M8X 85 PLATED	4							
22	1	26366-080002	NUT, M8	3							
23	1	22190-080002	WASHER, SEAL 6	4							
24	1	22190-080002	WASHER, SEAL 6	1							
25	1	121023-01550	COVER	1							
26	1	24341-000240	O-RING, 1AS24.0	1							
27	1	26106-060122	BOLT, M6X 12 PLATED	2							
28	1	977770-01212	GASKET, LIQUID	1							1

Remarks
(1) OPTIONAL PART.

N:Old ◄Yes/No► New. Q:Old ◄No/Yes► New. R:Old ◄Yes/Yes► New. S:Old ◄No/No► New. W:Add. Z:Discontinued. F:Interchangeable by set. K:Q'ty Change

Copyright (C) YANMAR CO., LTD. All RightsReserved.

Fig.3. FLYWHEEL HOUSING & OIL SUMP

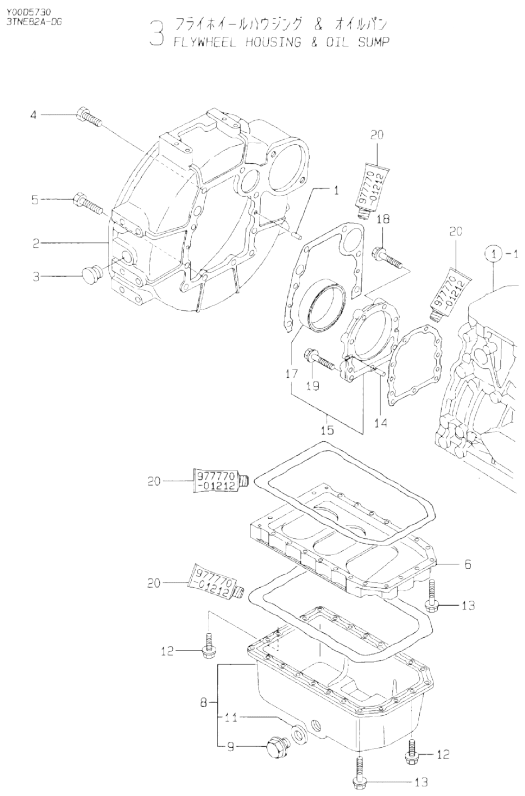

(A)=3TNE82A-DG (D)=
(B)= (E)=
(C)= (F)=

No.	Lev.	Parts No.	Description	Q'ty (A)	(B)	(C)	(D)	(E)	(F)	I	R
1	1	129100-01580	PIN, M8X16	2							
2	1	171420-01600	HOUSING, FLYWHEEL	1							
3	1	119620-01750	CAP	1							
4	1	26206-100252	BOLT, M10X 25 PLATED	6							
5	1	26206-100302	BOLT, M10X 30 PLATED	4							
6	1	119810-01730	SPACER, OIL SUMP	1							
8	1	119810-01770	SUMP ASSY, OIL	1							
9	2	119640-01640	PLUG, DRAIN M22	1							
11	2	22190-220002	WASHER, SEAL 22	1							
12	1	26106-080162	BOLT, M8X 16 PLATED	6							
13	1	26106-080452	BOLT, M8X 45 PLATED	22							
14	1	129100-01580	PIN, M8X16	2							
15	1	719810-01650	CASE ASSY, OIL SEAL	1							
17	2	119810-01780	SEAL, 769310	1							
18	1	26106-080302	BOLT, M8X 30 PLATED	6							
19	1	26106-080352	BOLT, M8X 35 PLATED	3							
20	1	977770-01212	GASKET, LIQUID	1							1

Remarks
(1) OPTIONAL PART.

N:Old ←Yes/No→ New. Q:Old ←No/Yes→ New. R:Old ←Yes/Yes→ New. S:Old ←No/No→ New. W:Add. Z:Discontinued. F:Interchangeable by set. K:Q'ty Change

Copyright (C) YANMAR CO., LTD. All RightsReserved.

Fig.4. CYLINDER HEAD & BONNET

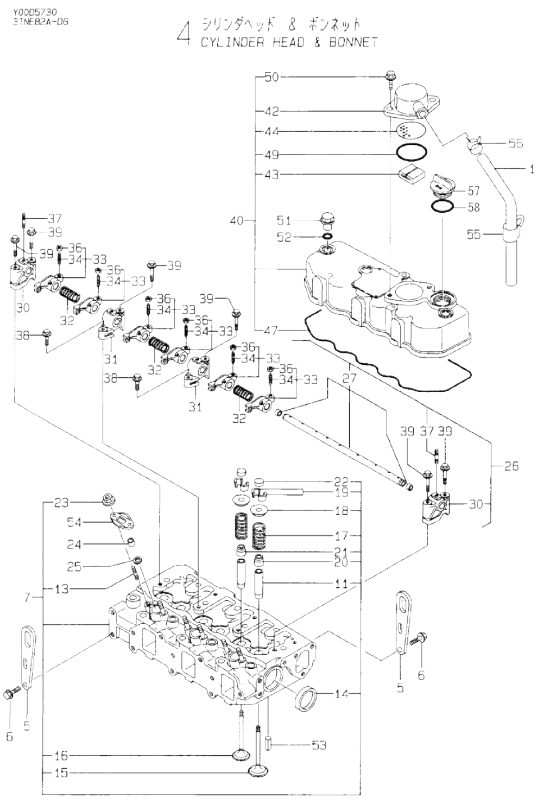

(A)=3TNE82A-DG
(B)=
(C)=
(D)=
(E)=
(F)=

No.	Lev.	Parts No.	Description	Q'ty (A)	(B)	(C)	(D)	(E)	(F)	I	R
1	1	119847-03100	PIPE , BREATHER	1							
5	1	124736-07900	LIFTER	2							
6	1	26106-080142	BOLT, M8X 14 PLATED	4							
7	1	719812-11700	HEAD ASSY, CYLINDER	1							
11	2	124060-11800	GUIDE, VALVE	6							1
13	2	26216-060302	STUD, M6X 30	6							
14	2	27241-400000	PLUG, 40	2							
15	2	119810-11100	VALVE, INTAKE	3							
16	2	119810-11110	VALVE, EXHAUST	3							
17	2	119810-11120	SPRING, VALVE	6							
18	2	104211-11180	RETAINER, SPRING	6							
19	2	27310-070001	COTTER, 7	6							
20	2	124160-11340	SEAL, VALVE STEM	3							
21	2	124950-11340	SEAL, VALVE STEM	3							
22	2	104211-11370	CAP, VALVE	6							
23	2	26366-060002	NUT, M6	6							
24	1	119625-11871	PROTECTOR, NOZZLE	3							
25	1	119625-11880	SEAT, NOZZLE	3							
26	1	119865-11210	SUPPORT ASSY	1							
27	2	119810-11240	SHAFT ASSY, ROCKER	1							
30	2	129155-11260	SUPPORT, ROCKER ARM	2							
31	2	129155-11270	SUPPORT, ROCKER ARM	2							
32	2	129150-11280	SPRING	3							
33	2	719810-11660	ARM ASSY, ROCKER	6							
34	3	129150-11230	SCREW, VALVE ADJUST	6							
36	3	129150-11750	NUT, M8	6							
37	2	26226-080182	STUD, M8X 18	3							
38	1	26106-080252	BOLT, M8X 25 PLATED	2							
39	1	26106-080502	BOLT, M8X 50 PLATED	6							
40	1	719810-11520	BONNET ASSY, HEAD	1							
42	2	129150-03020	COVER, BREATHER	1							
43	2	129150-03070	BAFFLE, BREATHER	1							
44	2	129150-03080	PLATE, BAFFLE	1							
47	2	119865-11310	GASKET, BONNET	1							
49	2	24341-000500	O-RING, 1AS50.0	1							
50	2	26106-080162	BOLT, M8X 16 PLATED	2							
51	1	124160-11360	KNOB	3							
52	1	24311-000120	O-RING, 1AP12.0	3							
53	1	22351-060012	PIN, SPRING 6.0X12	2							
54	1	119625-11900	RETAINER, NOZZLE	3							
55	1	129150-03100	RETAINER, PIPE	1							
56	1	129410-03990	CLAMP 22	2							
57	1	124160-01751	COVER, FILLER	1							
58	1	24311-000320	O-RING, 1AP32.0	1							

Remarks
(1) REPAIR PART.

N:Old ←Yes/No→ New. Q:Old ←No/Yes→ New. R:Old ←Yes/Yes→ New. S:Old ←No/No→ New. W:Add. Z:Discontinued. F:Interchangeable by set. K:Q'ty Change

Copyright (C) YANMAR CO., LTD. All RightsReserved.

Fig.5. SUCTION MANIFOLD

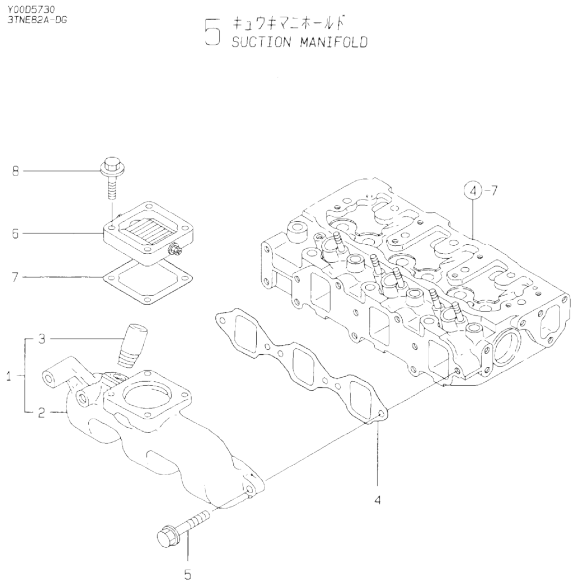

(A)=3TNE82A-DG (D)=
(B)= (E)=
(C)= (F)=

No.	Lev.	Parts No.	Description	Q'ty (A)	(B)	(C)	(D)	(E)	(F)	I	R
1	1	119847-12100	MANIFOLD ASSY,INTAKE	1							
2	2	119847-12110	MANIFOLD, AIR INTAKE	1							
3	2	104407-44480	JOINT	1							
4	1	119810-12111	GASKET, MANIFOLD	1							
5	1	26106-080252	BOLT, M8X 25 PLATED	4							
6	1	129120-77501	HEATER	1							
7	1	129150-77511	GASKET	1							
8	1	26106-080352	BOLT, M8X 35 PLATED	4							

N:Old $\frac{\text{Yes}}{\text{No}}$ New. Q:Old $\frac{\text{No}}{\text{Yes}}$ New. R:Old $\frac{\text{Yes}}{\text{Yes}}$ New. S:Old $\frac{\text{No}}{\text{No}}$ New. W:Add. Z:Discontinued. F:Interchangeable by set. K:Q'ty Change

Copyright (C) YANMAR CO., LTD. All RightsReserved.

Fig.6. EXHAUST MANIFOLD

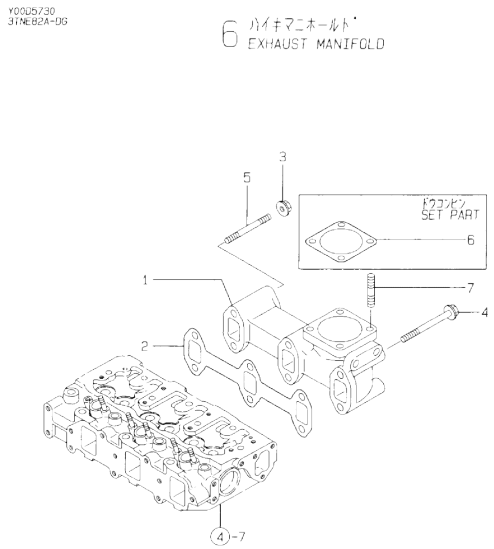

(A)=3TNE82A-DG (D)=
(B)= (E)=
(C)= (F)=

No.	Lev.	Parts No.	Description	Q'ty (A)	(B)	(C)	(D)	(E)	(F)	I	R
1	1	119888-13101	MANIFOLD, EXHAUST	1							
2	1	119810-13110	GASKET	1							
3	1	26106-080602	BOLT, M8X 60 PLATED	4							
4	1	26216-080222	STUD, M8X 22	4							
5	1	124701-11911	GASKET, SILENCER	1							
6	1	194990-22050	NUT, M8	2							
7	1	26216-080602	STUD, M8X 60	2							

N:Old ◄Yes/No► New. Q:Old ◄No/Yes► New, R:Old ◄Yes/Yes► New, S:Old ◄No/No► New, W:Add, Z:Discontinued, F:Interchangeable by set, K:Q'ty Change

Copyright (C) YANMAR CO., LTD. All RightsReserved.

Fig.7. CAMSHAFT & DRIVING GEAR

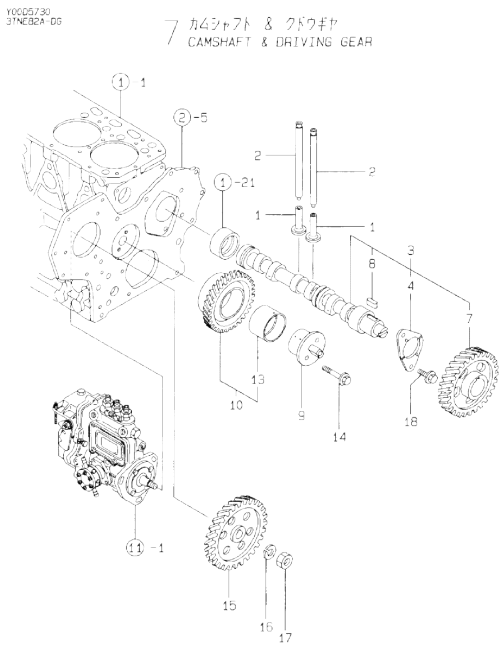

(A)=3TNE82A-DG (D)=
(B)= (E)=
(C)= (F)=

No.	Lev.	Parts No.	Description	Q'ty (A)	(B)	(C)	(D)	(E)	(F)	I	R
1	1	129150-14200	TAPPET	6							
2	1	119810-14400	ROD, PUSH	6							
3	1	119810-14580	CAMSHAFT ASSY	1							
4	2	129150-02450	BEARING, THRUST	1							
7	2	129150-14101	GEAR, CAMSHAFT	1							
8	2	22512-070140	KEY, 7X 14	1							
9	1	129100-25061	SHAFT, IDLE	1							
10	1	129150-25101	GEAR ASSY, IDLE	1							
13	2	129150-25920	BUSH, IDLE GEAR	1							1
14	1	26106-080452	BOLT, M8X 45 PLATED	2							
15	1	129150-25900	GEAR, PUMP	1							
16	1	22217-120000	WASHER, SPRING 12	1							
17	1	26716-120002	NUT, M12	1							
18	1	26106-080162	BOLT, M8X 16 PLATED	2							

Remarks
(1) REPAIR PART.

N:Old $\frac{\text{Yes}}{\text{No}}$ New. Q:Old $\frac{\text{No}}{\text{Yes}}$ New. R:Old $\frac{\text{Yes}}{\text{Yes}}$ New. S:Old $\frac{\text{No}}{\text{No}}$ New. W:Add. Z:Discontinued. F:Interchangeable by set. K:Q'ty Change

Copyright (C) YANMAR CO., LTD. All RightsReserved.

Fig.8. CRANKSHAFT & PISTON

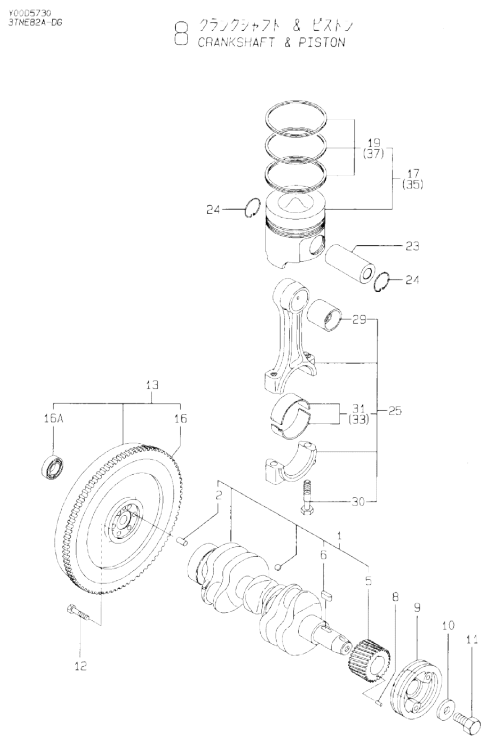

(A)=3TNE82A-DG
(B)=
(C)=
(D)=
(E)=
(F)=

No.	Lev.	Parts No.	Description	Q'ty (A)	(B)	(C)	(D)	(E)	(F)	I	R
1	1	119813-21000	CRANKSHAFT ASSY	1							
2	2	129100-01580	PIN, M8X16	1							
5	2	129150-21200	GEAR, CRANKSHAFT	1							
6	2	22512-070140	KEY, 7X 14	1							
8	1	22351-040010	PIN, SPRING 4.0X10	1							
9	1	129550-21650	V-PULLEY	1							
10	1	129795-21661	WASHER	1							
11	1	121850-21680	BOLT	1							
12	1	121111-21501	BOLT, FLYWHEEL	6							
13	1	119813-21590	FLYWHEEL ASSY	1							
16	2	124550-21600	GEAR, RING	1							
16A	2	24107-060034	BEARING, BALL 6003ZZ	1							
17	1	119813-22080	PISTON ASSY	3							
19	2	119813-22500	RING SET, PISTON	3							
23	1	119813-22300	PIN, PISTON	3							
24	1	129792-22400	CIRCLIP, 23	6							
25	1	719810-23100	ROD ASSY, CONNECTING	3							
29	2	119810-23910	BEARING, PISTON PIN	3							1
30	2	119810-23200	BOLT, CONNECTING ROD	6							
31	2	119810-23600	BEARING, CRANK PIN	3							
33	1	119810-23610	BEARING, 0.25 US	3							2
35	1	119813-22900	PISTON ASSY, 0.25 OS	3							3
37	2	129003-22950	RING SET, 0.25 OS	3							3

Remarks
(1) REPAIR PART.
(2) UNDER-SIZE(U.S=0.25)PART.
(3) OVER-SIZE(O.S=0.25)PART.

N:Old $\frac{\text{Yes}}{\text{No}}$ New. Q:Old $\frac{\text{No}}{\text{Yes}}$ New, R:Old $\frac{\text{Yes}}{\text{Yes}}$ New, S:Old $\frac{\text{No}}{\text{No}}$ New, W:Add, Z:Discontinued, F:Interchangeable by set, K:Q'ty Change

Copyright (C) YANMAR CO., LTD. All RightsReserved.

Fig.9. LUB.OIL SYSTEM

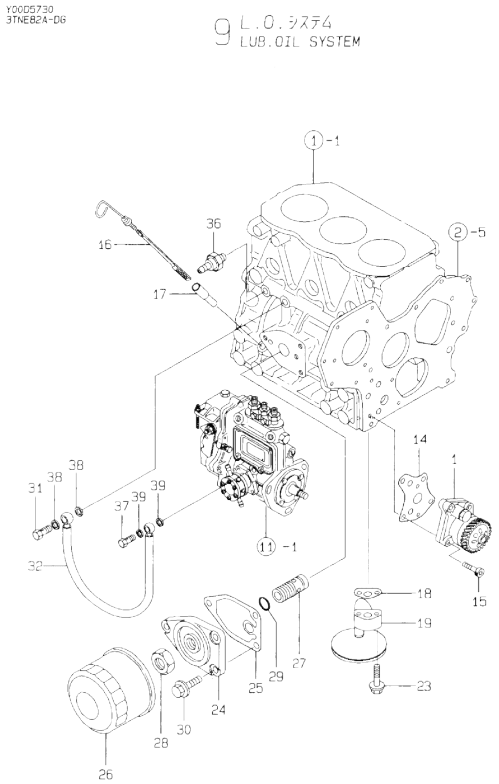

(A)=3TNE82A-DG (D)=
(B)= (E)=
(C)= (F)=

No.	Lev.	Parts No.	Description	Q'ty (A)	(B)	(C)	(D)	(E)	(F)	I	R
1	1	129001-32001	PUMP ASSY, OIL	1							
14	1	129150-32020	GASKET, PUMP	1							
15	1	26450-060252	BOLT, M6X 25	4							
16	1	119932-34800	DIPSTICK, OIL	1							
17	1	121520-34810	GUIDE, DIPSTICK	1							
18	1	129150-35041	GASKET	1							
19	1	119810-35300	PIPE ASSY, OIL INLET	1							
23	1	26106-080352	BOLT, M8X 35 PLATED	2							
24	1	129150-35101	BRACKET, STRAINER	1							
25	1	129150-35111	GASKET	1							
26	1	129150-35151	FILTER, D80XL80	1							
27	1	129001-35300	BOLT, FILTER	1							
28	1	129150-35350	NUT	1							
29	1	24311-000160	O-RING, 1AP16.0	1							
30	1	26106-080202	BOLT, M8X 20 PLATED	3							
31	1	124160-39140	BOLT, PIPE JOINT M10	1							
32	1	119810-39200	PIPE ASSY, OIL	1							
36	1	124160-39450	SWITCH, 0.5KG	1							
37	1	124550-59820	BOLT, PIPE JOINT M8	1							
38	1	23414-100000	GASKET, 10X1.0	2							
39	1	22190-080002	WASHER, SEAL 6	2							

N:Old ←Yes/No→ New. Q:Old ←No/Yes→ New. R:Old ←Yes/Yes→ New. S:Old ←No/No→ New. W:Add. Z:Discontinued. F:Interchangeable by set. K:Q'ty Change

Copyright (C) YANMAR CO., LTD. All RightsReserved.

Fig.10. COOLING WATER SYSTEM

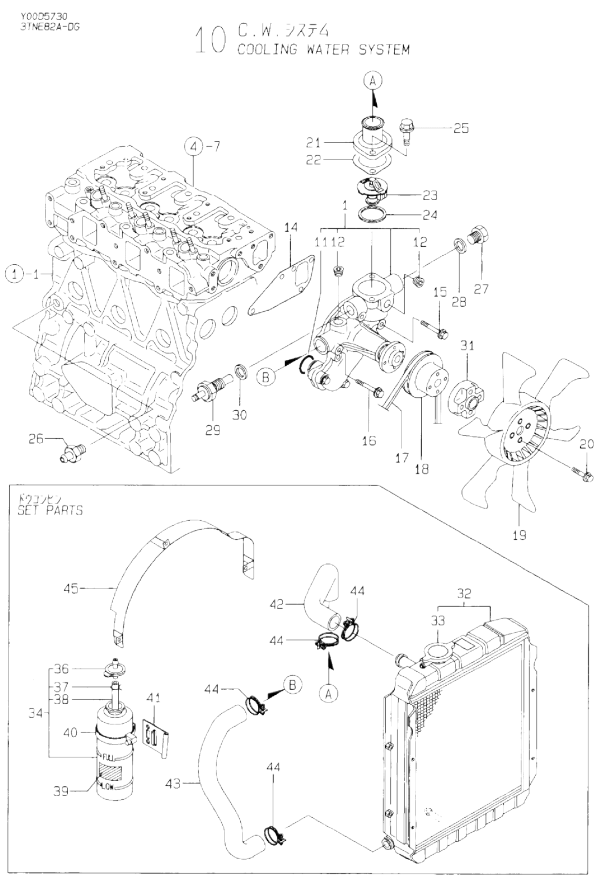

(A)=3TNE82A-DG
(B)=
(C)=
(D)=
(E)=
(F)=

No.	Lev.	Parts No.	Description	Q'ty (A)	(B)	(C)	(D)	(E)	(F)	I	R
1	1	119810-42001	PUMP ASSY, WATER	1							
11	2	129150-42320	O-RING	1							
12	2	23871-030000	PLUG, R03	2							
14	1	129150-42020	GASKET, WATER PUMP	1							
15	1	26106-080352	BOLT, M8X 35 PLATED	1							
16	1	26106-080552	BOLT, M8X 55 PLATED	3							
17	1	25132-003800	V-BELT, A38	1							
18	1	129155-42350	V-PULLEY	1							
19	1	171037-44740	FAN, COOLING	1							
20	1	26106-060352	BOLT, M6X 35 PLATED	4							
21	1	129350-49530	COVER, THERMOSTAT	1							
22	1	129795-49551	GASKET	1							
23	1	129155-49800	THERMOSTAT, 71	1							
24	1	129150-49811	GASKET, THERMOSTAT	1							
25	1	26106-080202	BOLT, M8X 20 PLATED	2							
26	1	121550-49111	JOINT, PT1/4	1							
27	1	121450-42450	PLUG, M16	1							
28	1	124465-44950	GASKET, 16	1							
29	1	121250-44901	SWITCH, 110	1							
30	1	124465-44950	GASKET, 16	1							
31	1	171353-44760	SPACER, FAN	1							
32	1	171420-44500	RADIATOR	1							
33	2	123682-44210	CAP, RADIATOR	1							
34	1	124450-44510	TANK ASSY, SUB	1							
36	2	124450-44530	CAP	1							
37	2	124450-44560	RETAINER	1							
38	2	23061-070230	PIPE, 7X 230	1							
39	1	121470-44540	LABEL, SUB-TANK	1							
40	1	124450-44550	BAND	1							
41	1	121256-44600	BRACKET, SUB TANK	1							
42	1	119280-49010	PIPE, WATER	1							
43	1	171301-49020	PIPE, WATER	1							
44	1	23010-038000	CLAMP, 38	4							
45	1	129111-44560	PROTECTOR, FAN	1							

N:Old ←Yes/No→ New. Q:Old ←No/Yes→ New. R:Old ←Yes/Yes→ New. S:Old ←No/No→ New. W:Add. Z:Discontinued. F:Interchangeable by set. K:Q'ty Change

Copyright (C) YANMAR CO., LTD. All RightsReserved.

Fig.11. FUEL INJECTION PUMP

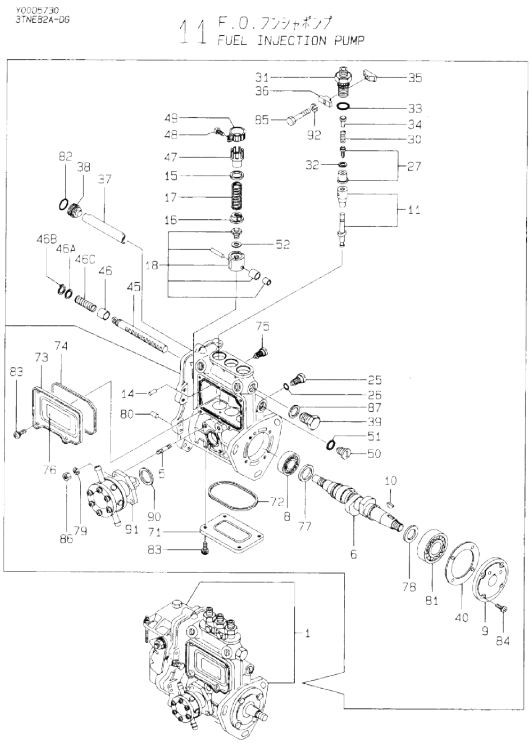

Remarks
(1) GOVERNOR(FIG.12) IS INCORPORATED
IN THIS FUEL INJECTION PUMP ASSY
(REF.NO.1).

(A)=3TNE82A-DG (D)=
(B)= (E)=
(C)= (F)=

No.	Lev.	Parts No.	Description	Q'ty (A)	(B)	(C)	(D)	(E)	(F)	I	R
1	1	719813-51310	PUMP ASSY, INJECTION	1							1
5	2	129155-51020	STUD	2							
6	2	119810-51040	CAMSHAFT	1							
8	2	129155-51050	BEARING, 17BM001D	1							
9	2	129155-51060	SUPPORT, CAMSHAFT	1							
10	2	122710-51090	KEY	1							
11	2	129108-51100	PLUNGER ASSY	3							
14	2	129155-51140	PIN	3							
15	2	174307-51170	RETAINER, SPRING A	3							
16	2	129155-51180	RETAINER, SPRING	3							
17	2	124950-51190	SPRING, PLUNGER	3							
18	2	129155-51200	TAPPET ASSY	3							
25	2	129155-51270	STOPPER, TAPPET	3							
26	2	129155-51280	O-RING, S6	3							
27	2	128170-51300	VALVE ASSY, DELIVERY	3							
30	2	129155-51320	SPRING, DELIVERY	3							
31	2	129155-51340	RETAINER	3							
32	2	124550-51350	GASKET, DELIVERY	3							
33	2	124550-51370	O-RING	3							
34	2	129155-51370	STOPPER, VALVE	3							
35	2	129155-51380	STOPPER	2							
36	2	129155-51390	STOPPER	2							
37	2	129155-51400	DEFLECTOR	1							
38	2	129155-51410	BOLT	1							
39	2	129155-51420	PLUG, M16	1							
40	2	129155-51450	SHIM SET, ADJUSTING	1							
45	2	129155-51500	RACK, CONTROL	1							
46	2	129155-51521	BUSH, RACK	1							
46A	2	129155-51530	SPACER	1							
46B	2	129155-51540	CIRCLIP	1							
46C	2	129155-51591	SPRING, RACK	1							
47	2	129155-51550	PINION, CONTROL	3							
48	2	122117-51560	SCREW	3							
49	2	174307-51560	PINION	3							
50	2	129155-51570	PLUG, M12	1							
51	2	129155-51580	O-RING	1							
52	2	129155-51600	SHIM SET, ADJUSTING	3							
71	2	129155-51700	COVER	1							
72	2	129155-51710	GASKET	1							
73	2	129155-51750	COVER	1							
74	2	129155-51760	GASKET	1							
75	2	129155-51790	STOOPER, RACK	1							
76	2	129156-51910	LABEL, CAUTION	1							
77	2	129155-51930	SPACER, T=3.25	1							
78	2	129155-51940	SPACER, T=1.5	1							
79	2	22217-060000	WASHER, SPRING 6	2							
80	2	22351-050010	PIN, SPRING 5.0X10	2							
81	2	24101-063034	BEARING, BALL 6303	1							
82	2	24341-000160	O-RING, 1AS16.0	1							
83	2	26022-050102	SCREW, M5X10	8							
84	2	26022-060162	SCREW, M6X16	4							

N:Old ←Yes/No→ New. Q:Old ←No/Yes→ New. R:Old ←Yes/Yes→ New. S:Old ←No/No→ New. W:Add. Z:Discontinued. F:Interchangeable by set. K:Q'ty Change

++ CONTINUE ++

Copyright (C) YANMAR CO., LTD. All RightsReserved.

Fig.11. FUEL INJECTION PUMP

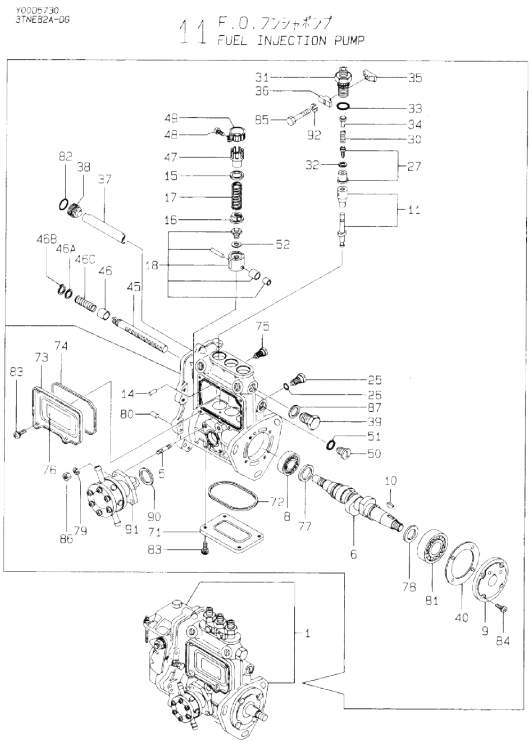

Remarks
(1) GOVERNOR(FIG.12) IS INCORPORATED
IN THIS FUEL INJECTION PUMP ASSY
(REF.NO.1).

(A)=3TNE82A-DG (D)=
(B)= (E)=
(C)= (F)=

No.	Lev.	Parts No.	Description	Q'ty (A)	(B)	(C)	(D)	(E)	(F)	I	R
85	2	26116-050302	BOLT, M5X 30 PLATED	2							
86	2	26716-060002	NUT, M6	2							
87	2	22190-160002	WASHER, SEAL 16	1							
90	2	129155-52050	GASKET	1							
91	2	129100-52100	PUMP ASSY, FUEL FEED	1							
92	2	22217-050000	WASHER, SPRING 5	2							

N:Old ←Yes/No→ New. Q:Old ←No/Yes→ New. R:Old ←Yes/Yes→ New. S:Old ←No/No→ New. W:Add. Z:Discontinued. F:Interchangeable by set. K:Q'ty Change

Copyright (C) YANMAR CO., LTD. All RightsReserved.

Fig.12. GOVERNOR

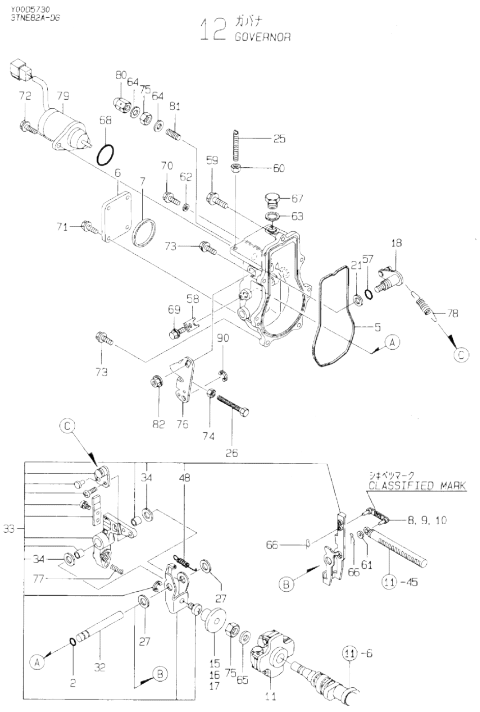

Remarks
(1) SELECTIVE PARTS: CERTAIN THE CLASSIFICATION MARK, THEN PLACE YOUR ORDER.(REFER TO ILLUSTRATION).
(2) SELECTIVE PARTS.
* THIS FIGURE(GOVERNOR ASSY) IS INCORPORATED IN THE FUEL INJECTION PUMP ASSY(FIG.11).

(A)=3TNE82A-DG (D)=
(B)= (E)=
(C)= (F)=

No.	Lev.	Parts No.	Description	Q'ty (A)	(B)	(C)	(D)	(E)	(F)	I	R
2	2	129155-51280	O-RING, S6	1							
5	2	129052-61050	GASKET	1							
6	2	129052-61060	COVER, GOVERNOR CASE	1							
7	2	129052-61070	GASKET	1							
8	2	129155-61120	LINK, L=30 MARK 0	1							1
9	2	129155-61130	LINK, L=31 MARK 1	1							1
10	2	129155-61140	LINK, L=30.5 MARK 05	1							1
11	2	171488-61200	WEIGHT ASSY,GOVERNOR	1							
15	2	129155-61341	SLEEVE	1							2
16	2	129155-61350	SLEEVE, L=24.9	1							2
17	2	129155-61360	SLEEVE, L=25.2	1							2
18	2	129100-61400	SHAFT ASSY	1							
21	2	129155-61430	SPACER	1							
25	2	129155-61450	BOLT, LIMITER	1							
26	2	129155-61460	BOLT, IDLE	1							
27	2	129155-61480	SPACER ASSY	2							
32	2	129052-61390	SHAFT	1							
33	2	129412-61500	LEVER ASSY, GOVERNOR	1							
34	3	174307-51700	SHIM SET	2							
48	3	119843-61540	SPRING, SET	1							
57	2	129155-61830	O-RING, S10	1							
58	2	119660-61901	RETAINER, SHAFT	1							
59	2	129155-61950	BOLT	1							
60	2	124550-66370	NUT, M6	1							
61	2	22117-040000	WASHER, 4	1							
62	2	22190-060002	WASHER, SEAL 6	1							
63	2	22190-100002	WASHER, SEAL 10	1							
64	2	22190-120002	WASHER, SEAL 12	2							
65	2	22287-120000	WASHER, 12	1							
66	2	22372-040000	PIN, SNAP 4	2							
67	2	23887-100002	PLUG, 10	1							
68	2	24341-000280	O-RING, 1AS28.0	1							
68-1	2	158552-61900	O-RING	1							N
	(A=EXXXXX)										
69	2	26106-060102	BOLT, M6X 10 PLATED	1							
70	2	26106-060102	BOLT, M6X 10 PLATED	1							
71	2	26106-060102	BOLT, M6X 10 PLATED	4							
72	2	26106-060142	BOLT, M6X 14 PLATED	2							
73	2	26106-060202	BOLT, M6X 20 PLATED	6							
74	2	26756-060002	NUT, LOCK M6	1							
75	2	26776-120002	NUT, LOCK M12	2							
76	2	129100-61440	LEVER, CONTROL	1							
77	2	129500-61650	SPRING, FUEL CONTROL	1							
78	2	119813-61700	SPRING, GOVERNOR	1							
79	2	119285-77950	SOLENOID	1							
80	2	26687-120002	NUT, CAP M12	1							
81	2	129155-61470	BOLT, CONTROL	1							
82	2	26366-080002	NUT, M8	1							

N:Old ←Yes/No→ New. Q:Old ←No/Yes→ New. R:Old ←Yes/Yes→ New. S:Old ←No/No→ New. W:Add. Z:Discontinued. F:Interchangeable by set. K:Q'ty Change

Copyright (C) YANMAR CO., LTD. All RightsReserved.

Fig.13. FUEL INJECTION VALVE

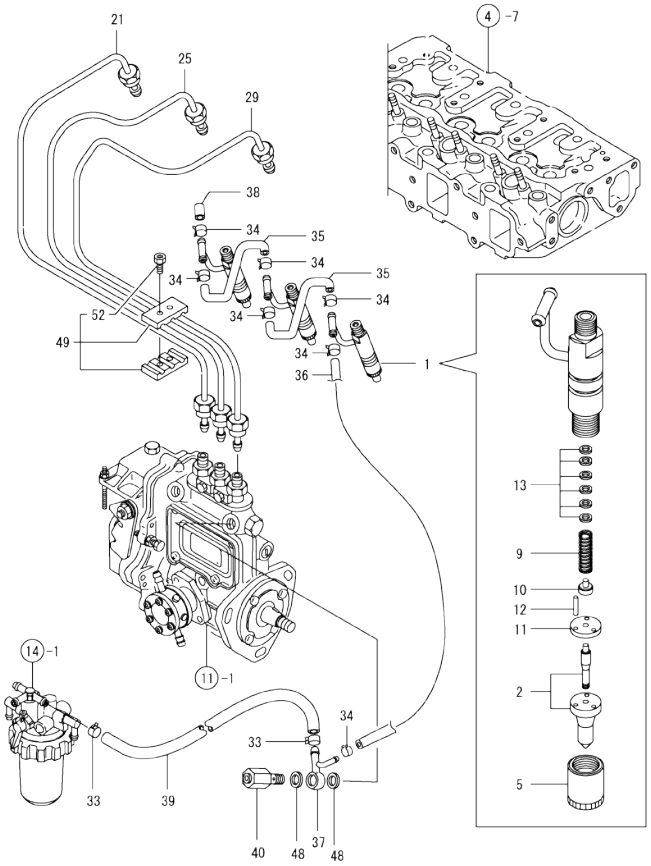

(A)=3TNE82A-DG (D)=
(B)= (E)=
(C)= (F)=

No.	Lev.	Parts No.	Description	Q'ty (A)	(B)	(C)	(D)	(E)	(F)	I	R
1	1	719800-53100	VALVE ASSY,INJECTION	3							
2	2	119800-53000	VALVE ASSY,INJECTION	3							
5	2	114250-53080	NUT, NOZZLE D16.95	3							
9	2	114250-53120	SPRING, NOZZLE	3							
10	2	114250-53130	SEAT, SPRING	3							
11	2	114250-53140	PLATE	3							
12	2	114250-53210	PIN	6							
13	2	114250-53400	SHIM SET	3							
21	1	119810-59810	PIPE ASSY, INJECTION	1							
25	1	119810-59820	PIPE ASSY, INJECTION	1							
29	1	119810-59830	PIPE ASSY, INJECTION	1							
33	1	124766-59050	CLIP, HOSE 12	2							
34	1	124066-59100	CLIP, HOSE 8	7							
35	1	121250-59550	PIPE, FUEL D8X120	2							
36	1	119840-59560	PIPE, FUEL RETURN	1							
37	1	119840-59570	JOINT	1							
38	1	129150-59580	CAP	1							
39	1	129255-59580	PIPE, FUEL	1							
40	1	129100-59951	VALVE ASSY, CHECK	1							
48	1	23414-120000	GASKET, 12X1.0	2							
49	1	129150-59120	RETAINER, PIPE	1							
52	2	129150-59131	BOLT, M4X14	2							

N:Old ←Yes/No→ New. Q:Old ←No/Yes→ New, R:Old ←Yes/Yes→ New, S:Old ←No/No→ New, W:Add, Z:Discontinued. F:Interchangeable by set. K:Q'ty Change

Copyright (C) YANMAR CO., LTD. All RightsReserved.

Fig.14. FUEL FILTER

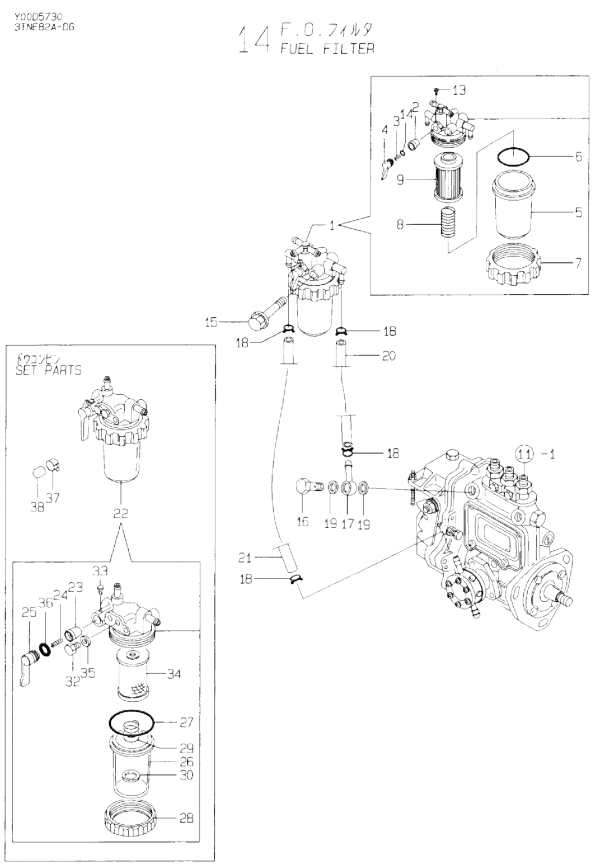

(A)=3TNE82A-DG (D)=
(B)= (E)=
(C)= (F)=

No.	Lev.	Parts No.	Description	Q'ty (A)	(B)	(C)	(D)	(E)	(F)	I	R
1	1	119810-55621	FILTER ASSY, FUEL	1							
2	2	104200-55321	VALVE, TAPER	1							
3	2	104200-55330	SPRING, VALVE	1							
4	2	119810-55340	LEVER	1							
5	2	121254-55510	COVER	1							
6	2	102103-55520	O-RING	1							
7	2	110250-55610	RING, RETAINING	1							
8	2	121250-55620	SPRING	1							
9	2	119810-55650	ELEMENT	1							
13	2	104200-55750	SCREW, M4	1							
14	2	24311-240100	O-RING, 1AP10A	1							
15	1	26014-080702	BOLT, M8X 70	1							
16	1	103854-39140	BOLT, PIPE JOINT	1							
17	1	101304-59020	JOINT, PIPE 12	1							
18	1	124766-59050	CLIP, HOSE 12	4							
19	1	22190-120002	WASHER, SEAL 12	2							
20	1	129555-59510	PIPE, D13/7.5X180	1							
21	1	129255-59580	PIPE, FUEL	1							
22	1	121257-55700	SEPARATOR, WATER	1							
23	2	104200-55321	VALVE, TAPER	1							
24	2	104200-55330	SPRING, VALVE	1							
25	2	104200-55341	HANDLE	1							
26	2	121254-55510	COVER	1							
27	2	102103-55520	O-RING	1							
28	2	110250-55610	RING, RETAINING	1							
29	2	121257-55720	SPRING	1							
30	2	121257-55731	FLOAT	1							
32	2	101720-55750	PLUG, 6	2							
33	2	104200-55750	SCREW, M4	1							
34	2	171081-55910	SCREEN	1							
35	2	23418-060000	GASKET, 6X1.0	2							
36	2	24311-240100	O-RING, 1AP10A	1							
37	1	124766-59050	CLIP, HOSE 12	1							
38	1	129461-59580	CAP, FUEL OIL	1							

N:Old ←Yes/No→ New. Q:Old ←No/Yes→ New. R:Old ←Yes/Yes→ New. S:Old ←No/No→ New. W:Add. Z:Discontinued. F:Interchangeable by set. K:Q'ty Change

Copyright (C) YANMAR CO., LTD. All RightsReserved.

Fig.15. STARTING MOTOR

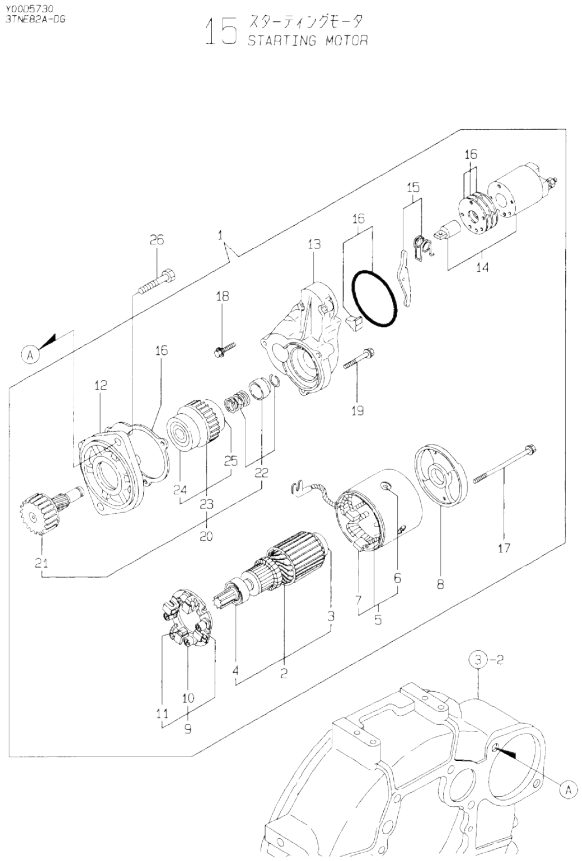

(A)=3TNE82A-DG (D)=
(B)= (E)=
(C)= (F)=

No.	Lev.	Parts No.	Description	Q'ty (A)	(B)	(C)	(D)	(E)	(F)	I	R
1	1	124976-77011	STARTER, S114-349A	1							
2	2	X211451007	ARMATURE ASSY	1							
3	3	X211415502	BEARING, BALL	1							
4	3	X211425502	BEARING, BALL	1							
5	2	X211472106	COIL ASSY, FIELD	1							
6	3	X21143215	SCREW, CORE	4							
7	3	X211469002	BRUSH (+)	2							
8	2	X211483003	COVER	1							
9	2	X211429007	HOLDER ASSY, BRUSH	1							
10	3	X21148314	SPRING, BRUSH	4							
11	3	X211459002	BRUSH (-)	2							
12	2	X211476504	HOUSING ASSY, GEAR	1							
13	2	X211414501	HOUSING, CENTER	1							
14	2	171008-55730	SWITCH ASSY	1							
15	2	X21146012	LEVER, SHIFT	1							
16	2	171008-77571	DUST COVER,(NON-ASB.	1							
17	2	X211468005	BOLT, THROUGH	2							
18	2	X21145866	BOLT	2							
19	2	X21142867	BOLT	3							
20	2	X211415505	CLUTCH ASSY	1							
21	3	X211495009	SHAFT	1							
22	3	X211429006	STOPPER SET	1							
23	3	X211425505	CLUTCH ASSY	1							
24	4	X211435502	BALL BEARING	1							
25	4	X211445502	BALL BEARING	1							
26	1	26116-120252	BOLT, M12X 25 PLATED	2							

N:Old ←Yes/No→ New. Q:Old ←No/Yes→ New. R:Old ←Yes/Yes→ New. S:Old ←No/No→ New. W:Add. Z:Discontinued. F:Interchangeable by set. K:Q'ty Change

Copyright (C) YANMAR CO., LTD. All RightsReserved.

Fig.16. GENERATOR

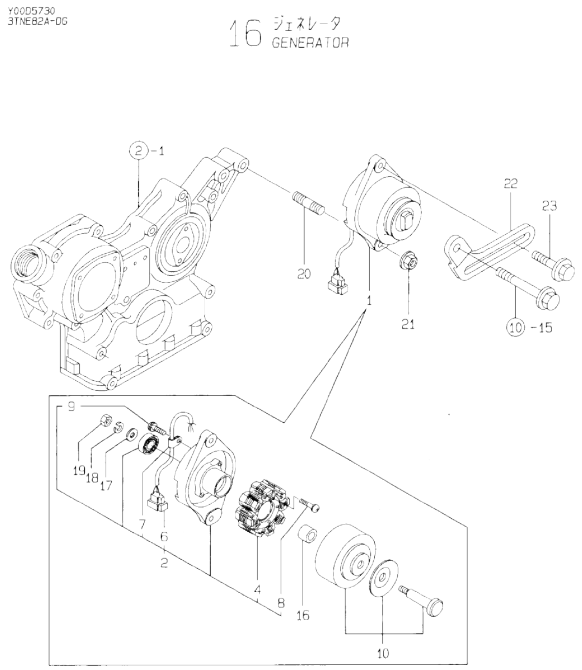

(A)=3TNE82A-DG (D)=
(B)= (E)=
(C)= (F)=

No.	Lev.	Parts No.	Description	Q'ty (A)	(B)	(C)	(D)	(E)	(F)	I	R
1	1	171301-77201	DYNAMO ASSY, 15A	1							
2	2	XM08137	PLATE ASSY	1							
4	3	XM08180	STATOR ASSY	1							
6	3	XM17878	COUPLER	1							
7	3	XM36410	CLAMP	1							
8	3	26022-040252	SCREW, M4X25	2							
9	3	XYSPS4008	SCREW	1							
10	2	XM82184	FLYWHEEL ASSY	1							
16	2	106383-44720	SPACER	1							
17	2	106383-44730	WASHER	1							
18	2	22212-100000	SPRING WASHER 10	1							
19	2	26716-100002	NUT, M10	1							
20	1	129795-01900	STUD	1							
21	1	26366-100002	NUT, M10	1							
22	1	129400-77330	ADJUSTER	1							
23	1	26014-080252	BOLT, M8X 25	1							

N:Old ←Yes/No→ New. Q:Old ←No/Yes→ New. R:Old ←Yes/Yes→ New. S:Old ←No/No→ New. W:Add. Z:Discontinued. F:Interchangeable by set. K:Q'ty Change

Copyright (C) YANMAR CO., LTD. All RightsReserved.

Fig.17. ELECTRIC PARTS

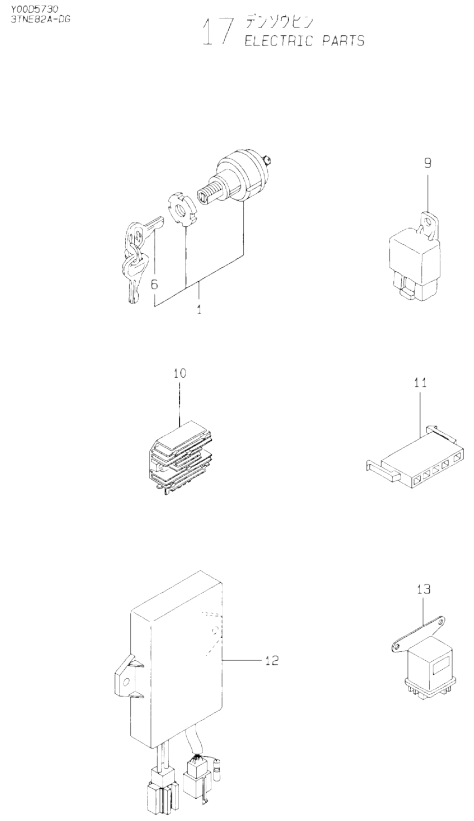

(A)=3TNE82A-DG (D)=
(B)= (E)=
(C)= (F)=

No.	Lev.	Parts No.	Description	Q'ty (A)	(B)	(C)	(D)	(E)	(F)	I	R
1	1	194940-52110	SWITCH, STARTING	1							
6	2	198360-52160	KEY ASSY	1							
9	1	119247-77100	RELAY, SAFETY	1							
10	1	119660-77710	LIMITER, CURRENT 15A	1							
10-1	1	119660-77711	LIMITER, CURRENT 15A	1						N	
	(A=E51742)										
11	1	171301-77720	COUPLER	1							
12	1	119265-77801	RELAY, EMERGENCY	1							
13	1	119650-77910	RELAY ASSY, GLOW	1							

N:Old ←Yes/No→ New. Q:Old ←No/Yes→ New. R:Old ←Yes/Yes→ New. S:Old ←No/No→ New. W:Add. Z:Discontinued. F:Interchangeable by set. K:Q'ty Change

Copyright (C) YANMAR CO., LTD. All RightsReserved.

Fig.18. GASKET SET

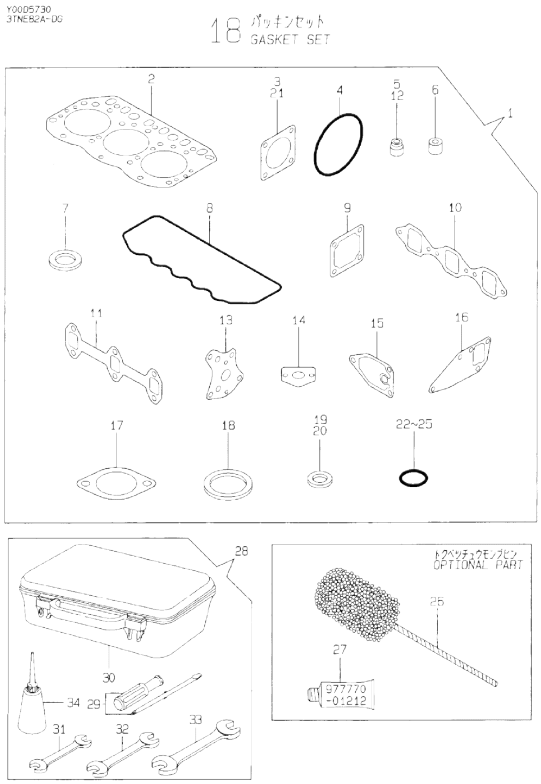

Remarks
(1) OPTIONAL PART.

(A)=3TNE82A-DG (D)=
(B)= (E)=
(C)= (F)=

No.	Lev.	Parts No.	Description	Q'ty (A)	(B)	(C)	(D)	(E)	(F)	I	R
1	1	719813-92640	GASKET SET	1							1
2	2	119812-01330	GASKET, HEAD	1							
3	2	124240-01883	GASKET	1							
4	2	121850-51960	O-RING	1							
5	2	124160-11340	SEAL, VALVE STEM	3							
6	2	119625-11871	PROTECTOR, NOZZLE	3							
7	2	119625-11880	SEAT, NOZZLE	3							
8	2	119865-11310	GASKET, BONNET	1							
9	2	129150-77511	GASKET	1							
10	2	119810-12111	GASKET, MANIFOLD	1							
11	2	119810-13110	GASKET	1							
12	2	124950-11340	SEAL, VALVE STEM	3							
13	2	129150-32020	GASKET, PUMP	1							
14	2	129150-35041	GASKET	1							
15	2	129150-35111	GASKET	1							
16	2	129150-42020	GASKET, WATER PUMP	1							
17	2	129795-49551	GASKET	1							
18	2	129150-49811	GASKET, THERMOSTAT	1							
19	2	124465-44950	GASKET, 16	2							
20	2	23414-120000	GASKET, 12X1.0	2							
21	2	124701-11911	GASKET, SILENCER	1							
22	2	24311-000120	O-RING, 1AP12.0	3							
23	2	24311-000160	O-RING, 1AP16.0	2							
24	2	24311-000320	O-RING, 1AP32.0	1							
25	2	24341-000240	O-RING, 1AS24.0	1							
26	1	129400-92420	FLEX HORN	1							1
27	1	977770-01212	GASKET, LIQUID	1							1
28	1	171001-93100	BOX, TOOL	1							
29	2	104200-92350	DRIVER, SCREW	1							
30	2	104200-92600	BOX, TOOL	1							
31	2	28110-100120	SPANNER, 10X12	1							
32	2	28110-140170	SPANNER, 14X17	1							
33	2	28110-190220	SPANNER, 19X22	1							
34	2	28210-000140	OILER	1							

N:Old ←Yes/No→ New. Q:Old ←No/Yes→ New. R:Old ←Yes/Yes→ New. S:Old ←No/No→ New. W:Add. Z:Discontinued. F:Interchangeable by set. K:Q'ty Change

Copyright (C) YANMAR CO., LTD. All RightsReserved.

Parts No. Index

Parts No.	Fig. No.	Ref. No.
101304-59020	14	17
101720-55750	14	32
102103-55520	14	6
		27
103854-39140	14	16
104200-55321	14	2
		23
104200-55330	14	3
		24
104200-55341	14	25
104200-55750	14	13
		33
104200-92350	18	29
104200-92600	18	30
104211-11180	4	18
104211-11370	4	22
104407-44480	5	3
106383-44720	16	16
106383-44730	16	17
110250-55610	14	7
		28
114250-53080	13	5
114250-53120	13	9
114250-53130	13	10
114250-53140	13	11
114250-53210	13	12
114250-53400	13	13
119247-77100	17	9
119265-77801	17	12
119280-49010	10	42
119285-77950	12	79
119620-01750	3	3
119620-02020	1	7
119625-11871	4	24
	18	6
119625-11880	4	25
	18	7
119625-11900	4	54
119640-01640	3	9
119650-77910	17	13
119660-61901	12	58
119660-77710	17	10
119660-77711	17	10 -1
119800-53000	13	2
119810-01200	1	22
119810-01730	3	6
119810-01770	3	8
119810-01780	3	17
119810-02800	1	15
119810-02870	1	24

Parts No.	Fig. No.	Ref. No.
119810-02930	1	18
119810-02940	1	27
119810-11100	4	15
119810-11110	4	16
119810-11120	4	17
119810-11240	4	27
119810-12111	5	4
	18	10
119810-13110	6	2
	18	11
119810-14400	7	2
119810-14580	7	3
119810-23200	8	30
119810-23600	8	31
119810-23610	8	33
119810-23910	8	29
119810-35300	9	19
119810-39200	9	32
119810-42001	10	1
119810-51040	11	6
119810-55340	14	4
119810-55621	14	1
119810-55650	14	9
119810-59810	13	21
119810-59820	13	25
119810-59830	13	29
119812-01330	1	23
	18	2
119813-21000	8	1
119813-21590	8	13
119813-22080	8	17
119813-22300	8	23
119813-22500	8	19
119813-22900	8	35
119813-61700	12	78
119840-59560	13	36
119840-59570	13	37
119843-61540	12	48
119847-03100	4	1
119847-12100	5	1
119847-12110	5	2
119865-11210	4	26
119865-11310	4	47
	18	8
119888-13101	6	1
119932-34800	9	16
121023-01550	2	25
121111-21501	8	12
121250-44901	10	29
121250-55620	14	8

Parts No.	Fig. No.	Ref. No.
121250-59550	13	35
121254-55510	14	5
		26
121256-44600	10	41
121257-55700	14	22
121257-55720	14	29
121257-55731	14	30
121450-01560	2	6
121450-42450	10	27
121470-44540	10	39
121520-34810	9	17
121550-49111	10	26
121850-21680	8	11
121850-51960	2	12
	18	4
122117-51560	11	48
122710-51090	11	10
123682-44210	10	33
124060-11800	4	11
124066-59100	13	34
124160-01751	2	7
	4	57
124160-01910	1	5
124160-11340	4	20
	18	5
124160-11360	4	51
124160-39140	9	31
124160-39450	9	36
124240-01871	2	8
124240-01883	2	9
	18	3
124450-44510	10	34
124450-44530	10	36
124450-44550	10	40
124450-44560	10	37
124465-44950	10	28
		30
	18	19
124550-21600	8	16
124550-51350	11	32
124550-51370	11	33
124550-59820	9	37
124550-66370	12	60
124701-11911	6	5
	18	21
124736-07900	4	5
124766-59050	13	33
	14	18
		37
124950-11340	4	21

Parts No.	Fig. No.	Ref. No.
124950-11340	18	12
124950-51190	11	17
124976-77011	15	1
128170-51300	11	27
129001-32001	9	1
129001-35300	9	27
129003-22950	8	37
129052-61050	12	5
129052-61060	12	6
129052-61070	12	7
129052-61390	12	32
129100-01580	3	1
		14
	8	2
129100-25061	7	9
129100-52100	11	91
129100-59951	13	40
129100-61400	12	18
129100-61440	12	76
129108-51100	11	11
129111-44560	10	45
129120-77501	5	6
129150-02450	7	4
129150-03020	4	42
129150-03070	4	43
129150-03080	4	44
129150-03100	2	11
	4	55
129150-11230	4	34
129150-11280	4	32
129150-11750	4	36
129150-14101	7	7
129150-14200	7	1
129150-21200	8	5
129150-25101	7	10
129150-25900	7	15
129150-25920	7	13
129150-32020	9	14
	18	13
129150-35041	9	18
	18	14
129150-35101	9	24
129150-35111	9	25
	18	15
129150-35151	9	26
129150-35350	9	28
129150-42020	10	14
	18	16
129150-42320	10	11
129150-49811	10	24

Parts No. Index

Parts No.	Fig. No.	Ref. No.
129150-49811	18	18
129150-59120	13	49
129150-59131	13	52
129150-59580	13	38
129150-77511	5	7
	18	9
129155-11260	4	30
129155-11270	4	31
129155-42350	10	18
129155-49800	10	23
129155-51020	11	5
129155-51050	11	8
129155-51060	11	9
129155-51140	11	14
129155-51180	11	16
129155-51200	11	18
129155-51270	11	25
129155-51280	11	26
	12	2
129155-51320	11	30
129155-51340	11	31
129155-51370	11	34
129155-51380	11	35
129155-51390	11	36
129155-51400	11	37
129155-51410	11	38
129155-51420	11	39
129155-51450	11	40
129155-51500	11	45
129155-51521	11	46
129155-51530	11	46 A
129155-51540	11	46 B
129155-51550	11	47
129155-51570	11	50
129155-51580	11	51
129155-51591	11	46 C
129155-51600	11	52
129155-51700	11	71
129155-51710	11	72
129155-51750	11	73
129155-51760	11	74
129155-51790	11	75
129155-51930	11	77
129155-51940	11	78
129155-52050	11	90
129155-61120	12	8
129155-61130	12	9
129155-61140	12	10
129155-61341	12	15
129155-61350	12	16

Parts No.	Fig. No.	Ref. No.
129155-61360	12	17
129155-61430	12	21
129155-61450	12	25
129155-61460	12	26
129155-61470	12	81
129155-61480	12	27
129155-61830	12	57
129155-61950	12	59
129156-51910	11	76
129255-59580	13	39
	14	21
129350-49530	10	21
129400-01520	2	5
129400-77330	16	22
129400-92420	18	26
129410-03990	4	56
129412-61500	12	33
129461-59580	14	38
129500-61650	12	77
129550-21650	8	9
129555-59510	14	20
129792-22400	8	24
129795-01800	2	4
129795-01900	16	20
129795-01950	2	10
129795-02411	1	21
129795-21661	8	10
129795-49551	10	22
	18	17
158552-61900	12	68 -1
171001-93100	18	28
171008-55730	15	14
171008-77571	15	16
171037-44740	10	19
171051-01921	1	6
171081-55910	14	34
171301-49020	10	43
171301-77201	16	1
171301-77720	17	11
171353-44760	10	31
171420-01600	3	2
171420-44500	10	32
171488-61200	12	11
174307-51170	11	15
174307-51560	11	49
174307-51700	12	34
194940-52110	17	1
194990-22050	6	6
198360-52160	17	6
22117-040000	12	61

Parts No.	Fig. No.	Ref. No.
22190-060002	12	62
22190-080002	2	23
		24
	9	39
22190-100002	12	63
22190-120002	12	64
	14	19
22190-160002	11	87
22190-220002	3	11
22212-100000	16	18
22217-050000	11	92
22217-060000	11	79
22217-120000	7	16
22287-120000	12	65
22351-040010	8	8
22351-050010	11	80
22351-060012	4	53
22372-040000	12	66
22512-070140	7	8
	8	6
23010-038000	10	44
23061-070230	10	38
23414-100000	9	38
23414-120000	13	48
	18	20
23418-060000	14	35
23871-010000	1	10
23871-030000	10	12
23887-100002	12	67
23887-120002	1	11
24101-063034	11	81
24107-060034	8	16 A
24311-000120	4	52
	18	22
24311-000160	2	13
	9	29
	18	23
24311-000320	2	14
	4	58
	18	24
24311-240100	14	14
		36
24341-000160	11	82
24341-000240	2	26
	18	25
24341-000280	12	68
24341-000500	4	49
25132-003800	10	17
26014-080252	16	23
26014-080702	14	15

Parts No.	Fig. No.	Ref. No.
26022-040252	16	8
26022-050102	11	83
26022-060162	11	84
26106-060102	12	69
		70
		71
26106-060122	2	27
26106-060142	12	72
26106-060202	12	73
26106-060352	10	20
26106-080122	2	15
26106-080142	4	6
26106-080162	2	16
		17
	3	12
	4	50
	7	18
26106-080202	2	18
	9	30
	10	25
26106-080252	4	38
	5	5
26106-080302	3	18
26106-080352	3	19
	5	8
	9	23
	10	15
26106-080452	2	19
	3	13
	7	14
26106-080502	4	39
26106-080552	2	20
	10	16
26106-080602	6	3
26106-080852	2	21
26116-050302	11	85
26116-120252	15	26
26206-100252	3	4
26206-100302	3	5
26216-060302	4	13
26216-080222	6	4
26216-080602	6	7
26226-080182	4	37
26366-060002	4	23
26366-080002	2	22
	12	82
26366-100002	16	21
26450-060252	9	15
26687-120002	12	80
26716-060002	11	86

Parts No. Index

Parts No.	Fig. No.	Ref. No.
26716-100002	16	19
26716-120002	7	17
26756-060002	12	74
26776-120002	12	75
27231-500000	1	12
27241-120000	1	13
27241-300000	1	14
27241-400000	4	14
27310-070001	4	19
28110-100120	18	31
28110-140170	18	32
28110-190220	18	33
28210-000140	18	34
719800-53100	13	1
719810-01500	2	1
719810-01650	3	15
719810-11520	4	40
719810-11660	4	33
719810-23100	8	25
719812-11700	4	7
719813-01560	1	1
719813-51310	11	1
719813-92640	18	1
977770-01212	2	28
	3	20
	18	27
X211414501	15	13
X211415502	15	3
X211415505	15	20
X211425502	15	4
X211425505	15	23
X21142867	15	19
X211429006	15	22
X211429007	15	9
X21143215	15	6
X211435502	15	24
X211445502	15	25
X211451007	15	2
X21145866	15	18
X211459002	15	11
X21146012	15	15
X211468005	15	17
X211469002	15	7
X211472106	15	5
X211476504	15	12
X211483003	15	8
X21148314	15	10
X211495009	15	21
XM08137	16	2
XM08180	16	4

Parts No.	Fig. No.	Ref. No.
XM17878	16	6
XM36410	16	7
XM82184	16	10
XYSPS4008	16	9

Parts No.	Fig. No.	Ref. No.

Parts No.	Fig. No.	Ref. No.