YANMAR

PARTS CATALOG

0CB10-M60300EN

Last update Apr., 2013

Directions for the Parts Catalog.

1.This Parts Catalog shows both standard and optional parts.
2.Parts may change without prior notice.
3.The following is an example of the Parts Catalog format.

0CF10-G21601 29. FUEL INJECTION PUMP(W/BOOST)

(A)=4JH-DT
(B)=4JH-DTZ
(C)=4JH-DTZP
(D)=4JH-DTZA
(E)=4JH-DTZY
(F)=

① REF.	② LEV.	PARTS NO.	DESCRIPTION	Q'TY (A)	(B)	(C)	(D)	(E)	(F)	③ I	⑤ R
1	1	729595-51390	FUEL INJECTION PUMP	1	1	1	1	1			1
1-1	1	729595-51391	FUEL INJECTION PUMP	1	1	1	1	1		N	1
	(A=E00185)	(B=E00200)									
3	2	26022-060162	SCREW M 6X 16	9	9	9	9	9			
3-1 ④	2	26022-060162	SCREW M 6X 16	4	4	4	4	4		K	
	(A=E00156)	(B=E00156)	(C=E00156) (D=E00156)	(E=E00156)							
4	2	129470-51040	CAMSHAFT	1	1	1	1	1			
5	2	122710-51050	BEARING, ROLLER	2	2	2	2	2			
6	2	129470-51060	RETAINER	1	1	1	1	1			

Remarks
(1) BOOST COMPEMSATOR TYPE. OPTIONAL PART, TO E00155,(4JH-DT, 4JH-DTZ

①Ref. No.

The Ref. No. listed may not be in accordance with the illustration Ref. No.

(Ex.) Illustration No. 1 List Ref No. 1 (Before change) → 1- 1 (After change)

For interchangeable symbols N, R and K, illustrations for new parts may be abbreviated.

②Lev. (Level)

Level indication
The numbers below indicate the level of relativity towards the main part.
1 ----- Main parts (Assembly parts)
2 ----- Sub component included in " 1 ".
3 ----- Sub component included in " 2 ".
Note) Parts that are not for sale are partially illustrated but not listed.

③Interchangeability Symbol

When a part change takes place, one of the following interchangeability symbols is indicated beside the part.

Symbol	Interchangeability	Contents note
N	Old ← Yes / No → New	New Part is interchangeable for Old Part but Old Part is not interchangeable for New Part.
Q	Old ← No / Yes → New	New Part is not interchangeable for Old Part but Old Part is interchangeable for New Part.
R	Old ← Yes / Yes → New	New/ Old Parts are both interchangeable.
S	Old ← No / No → New	New/ Old Parts are both not interchangeable.
W		Part newly added.
Z		Part discontinued.
F		Not interchangeable by a single part but interchangeable together with related parts.
K		Changes only for used parts quantities.

④Effective Machine No.

When a part changes, the effective Machine No. will be indicated in the (A)-(F) column.

Product Symbol	Product No.	Product Symbol	Product No.
C	Clutch No. Compressor No.	F	Machine No. (Agricultural Equip.)
D	Drive No.	M	Machine No.
E	Engine No.		

Note 1) A date may follow the symbol. (Ex.) 1996.01
Note 2) " XXXXX " and " ZZZZZ " are for parts that could not be predicted or for engine models that could not be identified.
Note 3) (A=E00185) is the E (Engine Serial Number) for the column (A) model (in this case 4JH-DT) after the parts design change.

⑤Remarks

Figures or alphabets (symbols) are entered in the remarks column.
The comments (remarks) on parts that are indicated at the bottom of the illustration are the same symbols as those stated above.

Contents

0CB10-M60300

Fig. No. Fig. Name

3TNE84-GB1(S)

1. CYLINDER BLOCK
2. GEAR HOUSING
3. FLYWHEEL HOUSING & OIL SUMP
4. CYLINDER HEAD & BONNET
5. SUCTION MANIFOLD & AIR CLEANER
6. EXHAUST MANIFOLD & SILENCER
7. CAMSHAFT & DRIVING GEAR
8. CRANKSHAFT & PISTON
9. LUB. OIL SYSTEM
10. COOLING WATER SYSTEM
11. FUEL INJECTION PUMP
12. GOVERNOR
13. FUEL INJECTION VALVE
14. FUEL LINE
15. STARTING MOTOR
16. GENERATOR
17. ELECTRICAL PARTS
18. GASKET SET & TOOL

4TNE84-GB1(S)

19. CYLINDER BLOCK
20. GEAR HOUSING
21. FLYWHEEL HOUSING & OIL SUMP
22. CYLINDER HEAD & BONNET
23. SUCTION MANIFOLD & AIR CLEANER
24. EXHAUST MANIFOLD & SILENCER
25. CAMSHAFT & DRIVING GEAR
26. CRANKSHAFT & PISTON
27. LUB. OIL SYSTEM
28. COOLING WATER SYSTEM
29. FUEL INJECTION PUMP
30. GOVERNOR
31. FUEL INJECTION VALVE
32. FUEL LINE
33. STARTING MOTOR
34. GENERATOR
35. ELECTRICAL PARTS
36. GASKET SET & TOOL

4TNE84T-GB1(S)

37. CYLINDER BLOCK
38. GEAR HOUSING
39. FLYWHEEL HOUSING & OIL SUMP
40. CYLINDER HEAD & BONNET
41. SUCTION MANIFOLD & AIR CLEANER
42. EXHAUST MANIFOLD & SILENCER
43. CAMSHAFT & DRIVING GEAR
44. TURBOCHARGER
45. CRANKSHAFT & PISTON

Contents

0CB10-M60300

Fig. No.	Fig. Name
46.	LUB. OIL SYSTEM
47.	LUB. OIL LINE
48.	COOLING WATER SYSTEM
49.	FUEL INJECTION PUMP
50.	GOVERNOR
51.	FUEL INJECTION VALVE
52.	FUEL LINE
53.	STARTING MOTOR
54.	GENERATOR
55.	ELECTRICAL PARTS
56.	GASKET SET & TOOL
57.	GENERATOR
58.	PANEL(TYPE A1,P)
59.	PANEL(TYPE B1)
60.	PANEL(TYPE BS)
61.	FRAME(TYPE P)
62.	FRAME(TYPE A1)
63.	BONNET(TYPE B1)
64.	BONNET(TYPE BS)
65.	GENERATOR
66.	PANEL(TYPE A1,P)
67.	PANEL(TYPE B1)
68.	PANEL(TYPE BS)
69.	FRAME(TYPE P)
70.	FRAME(TYPE A1)
71.	BONNET(TYPE B1)
72.	BONNET(TYPE BS)

Fig.1. CYLINDER BLOCK

(A)=3TNE84-GB1
(B)=3TNE84-GB1S
(C)=
(D)=
(E)=
(F)=

No.	Lev.	Parts No.	Description	Q'ty (A)	(B)	(C)	(D)	(E)	(F)	I	R
1	1	729002-01560	BLOCK ASSY, CYLINDER	1	1						
5	2	124160-01910	PLUG, PT1/4	3	3						
6	2	171051-01921	PLUG, NPTF1	1	1						
7	2	129150-02020	BOLT, METAL CAP	8	8						
10	2	129795-02411	BUSH, CAMSHAFT	1	1						
11	2	23871-010000	PLUG, R01	1	1						
12	2	27231-500000	PLUG 50	1	1						
13	2	27241-120000	PLUG, 12	2	2						
14	2	27241-300000	PLUG 30	6	6						
15	2	129001-02800	BEARING, MAIN	4	4						
18	2	129150-02930	BEARING, THRUST	2	2						
21	1	129150-01200	BOLT, HEAD	14	14						
22	1	129002-01331	GASKET, HEAD	1	1						
23	1	129150-02870	BEARING, 0.25 US	4	4						1
26	1	129150-02940	BEARING, THRUST 0.25	2	2						2

Remarks
(1) UNDER-SIZE(U.S=0.25)PART.
(2) OVER-SIZE(O.S=0.25)PART.

N:Old $\xleftarrow[\text{No}]{\text{Yes}}$ New. Q:Old $\xleftarrow[\text{Yes}]{\text{No}}$ New. R:Old $\xleftarrow[\text{Yes}]{\text{Yes}}$ New. S:Old $\xleftarrow[\text{No}]{\text{No}}$ New. W:Add. Z:Discontinued. F:Interchangeable by set. K:Q'ty Change

Copyright (C) YANMAR GLOBAL CS CO., LTD. All RightsReserved.

Fig.2. GEAR HOUSING

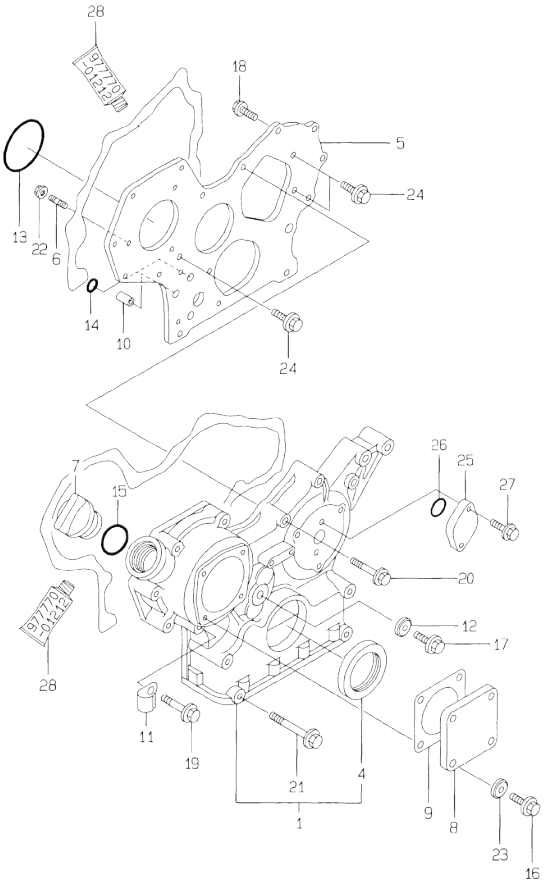

(A)=3TNE84-GB1
(B)=3TNE84-GB1S
(C)=
(D)=
(E)=
(F)=

No.	Lev.	Parts No.	Description	Q'ty (A)	(B)	(C)	(D)	(E)	(F)	I	R
1	1	719810-01500	CASE ASSY, GEAR	1	1						
4	2	129795-01800	SEAL, OIL	1	1						
5	1	129400-01520	FLANGE, GEAR CASE	1	1						
6	1	121450-01560	STUD, M8X22	3	3						
7	1	124160-01751	COVER, FILLER	1	1						
8	1	124240-01871	COVER	1	1						
9	1	124240-01883	GASKET	1	1						
10	1	129795-01950	PIPE, KNOCK L=18	2	2						
11	1	129150-03100	RETAINER, PIPE	1	1						
12	1	22190-080002	WASHER, SEAL 6	1	1						
13	1	121850-51960	O-RING	1	1						
14	1	24311-000160	O-RING, 1AP16.0	2	2						
15	1	24311-000320	O-RING, 1AP32.0	1	1						
16	1	26106-080122	BOLT, M8X 12 PLATED	4	4						
17	1	26106-080162	BOLT, M8X 16 PLATED	1	1						
18	1	26106-080202	BOLT, M8X 20 PLATED	2	2						
19	1	26106-080452	BOLT, M8X 45 PLATED	6	6						
20	1	26106-080552	BOLT, M8X 55 PLATED	3	3						
21	1	26106-080852	BOLT, M8X 85 PLATED	4	4						
22	1	26366-080002	NUT, M8	3	3						
23	1	22190-080002	WASHER, SEAL 6	4	4						
24	1	26106-080162	BOLT, M8X 16 PLATED	3	3						
25	1	121023-01550	COVER	1	1						
26	1	24341-000240	O-RING, 1AS24.0	1	1						
27	1	26106-060122	BOLT, M6X 12 PLATED	2	2						
28	1	977770-01212	GASKET, LIQUID	1	1						1

Remarks
(1) OPTIONAL PART.

N:Old ◄Yes/No► New. Q:Old ◄No/Yes► New, R:Old ◄Yes/Yes► New, S:Old ◄No/No► New. W:Add. Z:Discontinued. F:Interchangeable by set. K:Q'ty Change

Copyright (C) YANMAR GLOBAL CS CO., LTD. All RightsReserved.

Fig.3. FLYWHEEL HOUSING & OIL SUMP

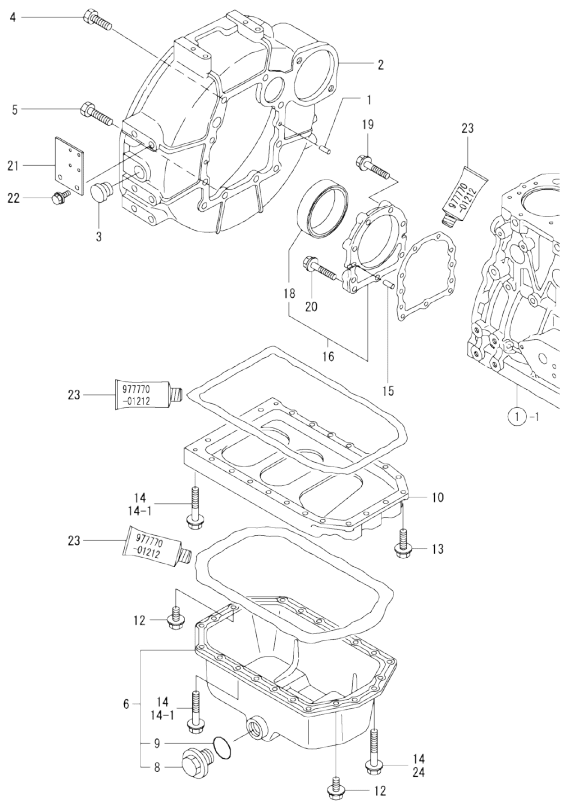

Remarks
(1) OPTIONAL PART.

(A)=3TNE84-GB1
(B)=3TNE84-GB1S
(C)=
(D)=
(E)=
(F)=

No.	Lev.	Parts No.	Description	Q'ty (A)	(B)	(C)	(D)	(E)	(F)	I	R
1	1	129100-01580	PIN, M8X16	2	2						
2	1	171420-01600	HOUSING, FLYWHEEL	1	1						
3	1	119620-01750	CAP	1	1						
4	1	26206-100252	BOLT, M10X 25 PLATED	6	6						
5	1	26206-100302	BOLT, M10X 30 PLATED	4	4						
6	1	129100-01760	SUMP ASSY, OIL	1	1						
8	2	171301-01640	PLUG, 22	1	1						
9	2	24341-000250	O-RING, 1AS25.0	1	1						
10	1	129100-01730	SPACER, OIL SUMP	1	1						
12	1	26106-080162	BOLT, M8X 16 PLATED	4	4						
13	1	26106-080252	BOLT, M8X 25 PLATED	2	2						
14	1	26106-080452	BOLT, M8X 45 PLATED	20	20						
14-1	1	26106-080452	BOLT, M8X 45 PLATED	16	16					K	
	(A=FROM 1ST)		(B=FROM 1ST)								
15	1	129100-01580	PIN, M8X16	2	2						
16	1	129100-01640	CASE ASSY, OIL SEAL	1	1						
18	2	129795-01780	SEAL, OIL	1	1						
19	1	129486-01670	BOLT, M8X30	6	6						
20	1	26106-080352	BOLT, M8X 35 PLATED	3	3						
21	1	129111-67010	SUPPORT, WIRE	1	1						
22	1	26106-080162	BOLT, M8X 16 PLATED	2	2						
23	1	977770-01212	GASKET, LIQUID	1	1						1
24	1	26106-080502	BOLT, M8X 50 PLATED	4	4					W	
	(A=FROM 1ST)		(B=FROM 1ST)								

N:Old ←Yes/No→ New. Q:Old ←No/Yes→ New. R:Old ←Yes/Yes→ New. S:Old ←No/No→ New. W:Add. Z:Discontinued. F:Interchangeable by set. K:Q'ty Change

Copyright (C) YANMAR GLOBAL CS CO., LTD. All RightsReserved.

Fig.4. CYLINDER HEAD & BONNET

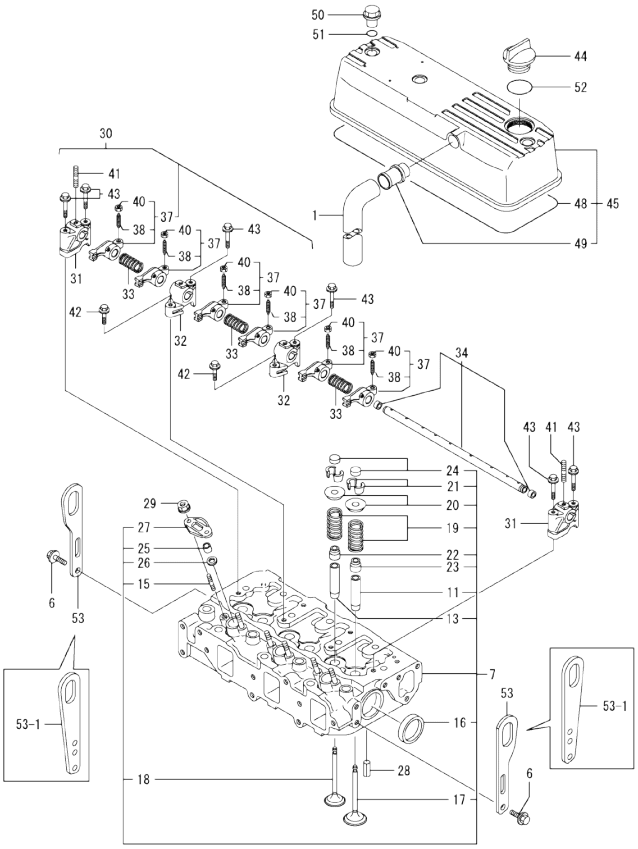

(A)=3TNE84-GB1
(B)=3TNE84-GB1S
(C)=
(D)=
(E)=
(F)=

No.	Lev.	Parts No.	Description	Q'ty (A)	(B)	(C)	(D)	(E)	(F)	I	R
1	1	171350-03090	PIPE , BREATHER 900	1	1						
6	1	26106-080142	BOLT, M8X 14 PLATED	4	4						
7	1	129001-11700	HEAD ASSY, CYLINDER	1	1						
11	2	120130-11860	GUIDE, VALVE	3	3						1
13	2	129150-11810	GUIDE, VALVE	3	3						1
15	2	26216-060202	STUD, M6X 20	6	6						
16	2	27241-400000	PLUG, 40	2	2						
17	2	129100-11100	VALVE, INTAKE	3	3						
18	2	129100-11110	VALVE, EXHAUST	3	3						
19	2	129795-11120	SPRING, VALVE	6	6						
20	2	129795-11180	RETAINER, SPRING	6	6						
21	2	27310-080001	COTTER, 8	6	6						
22	2	121400-11340	SEAL, VALVE STEM	3	3						
23	2	124460-11340	SEAL, VALVE STEM	3	3						
24	2	129150-11370	CAP, VALVE	6	6						
25	2	119625-11871	PROTECTOR, NOZZLE	3	3						
26	2	119625-11880	SEAT, NOZZLE	3	3						
27	2	119625-11900	RETAINER, NOZZLE	3	3						
28	1	22351-060012	PIN, SPRING 6.0X12	2	2						
29	1	26366-060002	NUT, M6	6	6						
30	1	129100-11240	SHAFT ASSY, ROCKER	1	1						
31	2	129155-11260	SUPPORT, ROCKER ARM	2	2						
32	2	129155-11270	SUPPORT, ROCKER ARM	2	2						
33	2	129150-11280	SPRING	3	3						
34	2	129150-11290	SHAFT, ROCKER ARM	1	1						
37	2	129100-11650	ARM, ROCKER	6	6						
38	3	129150-11230	SCREW, VALVE ADJUST	6	6						
40	3	129150-11750	NUT, M8	6	6						
41	2	26226-080182	STUD, M8X 18	3	3						
42	1	26106-080252	BOLT, M8X 25 PLATED	2	2						
43	1	26106-080502	BOLT, M8X 50 PLATED	6	6						
44	1	124160-01751	COVER, FILLER	1	1						
45	1	129001-11350	BONNET ASSY, HEAD	1	1						
48	2	129001-11310	GASKET, BONNET	1	1						
49	2	129001-11340	PIPE , BREATHER	1	1						
50	1	124160-11360	KNOB	3	3						
51	1	24311-000120	O-RING, 1AP12.0	3	3						
52	1	24311-000320	O-RING, 1AP32.0	1	1						
53	1	124736-07900	LIFTER	2	2						
53-1	1	129900-07900	LIFTER	2	2					N	
	(A=*2009.08)		(B=*2009.08)								

Remarks
(1) REPAIR PART.

N:Old $\frac{\text{Yes}}{\text{No}}$ New. Q:Old $\frac{\text{No}}{\text{Yes}}$ New. R:Old $\frac{\text{Yes}}{\text{Yes}}$ New. S:Old $\frac{\text{No}}{\text{No}}$ New. W:Add. Z:Discontinued. F:Interchangeable by set. K:Q'ty Change

Copyright (C) YANMAR GLOBAL CS CO., LTD. All RightsReserved.

Fig.5. SUCTION MANIFOLD & AIR CLEANER

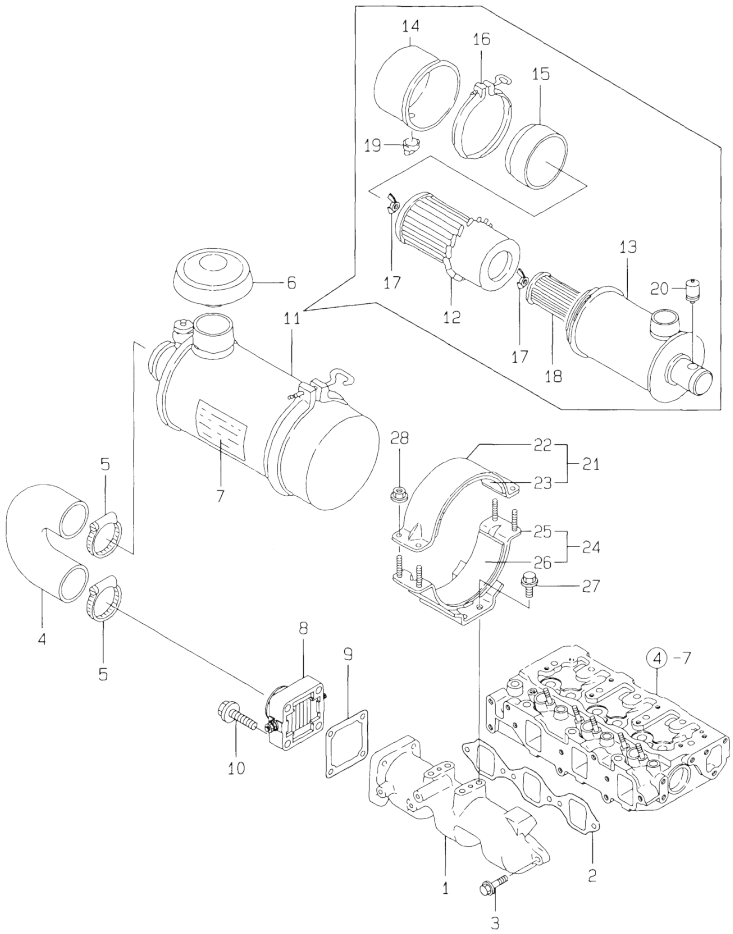

(A)=3TNE84-GB1
(B)=3TNE84-GB1S
(C)=
(D)=
(E)=
(F)=

No.	Lev.	Parts No.	Description	Q'ty (A)	(B)	(C)	(D)	(E)	(F)	I	R
1	1	129122-12100	MANIFOLD, AIR INTAKE	1	1						
2	1	129150-12111	GASKET, MANIFOLD	1	1						
3	1	26106-080252	BOLT, M8X 25 PLATED	4	4						
4	1	171351-12210	PIPE, AIR INTAKE	1	1						
5	1	23000-060000	CLAMP, 60	2	1						
6	1	121521-12400	CAP, RAIN	1							
7	1	171064-12600	LABEL, AIR CLEANER	1	1						
8	1	129120-77501	HEATER	1	1						
9	1	129150-77511	GASKET	1	1						
10	1	26106-080352	BOLT, M8X 35 PLATED	4	4						
11	1	121521-12500	CLEANER ASSY, AIR	1	1						
12	2	121420-12511	ELEMENT	1	1						
13	2	171061-12520	BODY ASSY	1	1						
14	2	121422-12530	CUP	1	1						
15	2	121420-12540	SCARF, BAFFLE	1	1						
16	2	121420-12550	CLAMP ASSY	1	1						
17	2	121420-12561	NUT, WING	2	2						
18	2	121422-12570	ELEMENT	1	1						
19	2	121422-12580	VALVE, UNLOADER	1	1						
20	2	126650-12680	INDICATOR	1	1						
21	1	121400-12540	BAND ASSY, CLEANER	1	1						
22	2	121400-12560	BAND, AIR CLEANER	1	1						
23	2	121400-12570	SEAT, RUBBER B	1	1						
24	1	171351-12580	SUPPORT ASSY,CLEANER	1	1						
25	2	171351-12560	SUPPORT, AIR CLEANER	1	1						
26	2	171351-12570	SEAT, RUBBER	1	1						
27	1	26106-080142	BOLT, M8X 14 PLATED	4	4						
28	1	26366-060002	NUT, M6	4	4						

N:Old ←Yes/No→ New. Q:Old ←No/Yes→ New. R:Old ←Yes/Yes→ New. S:Old ←No/No→ New. W:Add. Z:Discontinued. F:Interchangeable by set. K:Q'ty Change

Copyright (C) YANMAR GLOBAL CS CO., LTD. All RightsReserved.

Fig.6. EXHAUST MANIFOLD & SILENCER

(A)=3TNE84-GB1
(B)=3TNE84-GB1S
(C)=
(D)=
(E)=
(F)=

No.	Lev.	Parts No.	Description	Q'ty (A)	(B)	(C)	(D)	(E)	(F)	I	R
1	1	129001-13100	MANIFOLD, EXHAUST	1	1						
2	1	129001-13110	GASKET	1	1						
3	1	194990-22050	NUT, M8	2	2						
4	1	26106-080402	BOLT, M8X 40 PLATED	4	4						
5	1	119131-18320	STUD, M8X22	4	4						
6	1	26216-080402	STUD, M8X 40	2	2						
7	1	124701-11911	GASKET, SILENCER	1							
8	1	129111-13500	SILENCER	1							
9	1	129111-13600	COVER, SILENCER	1							
10	1	129111-13650	STAY, SILENCER	1							
11	1	129111-13670	BAND, SILENCER	1							
12	1	129111-13680	BAND, SILENCER	1							
13	1	194990-22050	NUT, M8	4							
14	1	26014-080302	BOLT, M8X 30	2							
15	1	26106-080122	BOLT, M8X 12 PLATED	4							
16	1	26106-080142	BOLT, M8X 14 PLATED	2							
17	1	124701-11911	GASKET, SILENCER		1						

N:Old ◄Yes/No► New. Q:Old ◄No/Yes► New. R:Old ◄Yes/Yes► New. S:Old ◄No/No► New. W:Add. Z:Discontinued. F:Interchangeable by set. K:Q'ty Change

Copyright (C) YANMAR GLOBAL CS CO., LTD. All RightsReserved.

Fig.7. CAMSHAFT & DRIVING GEAR

(A)=3TNE84-GB1
(B)=3TNE84-GB1S
(C)=
(D)=
(E)=
(F)=

No.	Lev.	Parts No.	Description	Q'ty (A)	(B)	(C)	(D)	(E)	(F)	I	R
1	1	129150-14200	TAPPET	6	6						
2	1	129150-14400	ROD, PUSH L=178	6	6						
3	1	129129-14580	CAMSHAFT ASSY	1	1						
4	2	129150-02450	BEARING, THRUST	1	1						
7	2	129150-14101	GEAR, CAMSHAFT	1	1						
8	2	22512-070140	KEY, 7X 14	1	1						
9	1	26106-080142	BOLT, M8X 14 PLATED	2	2						
10	1	129100-25061	SHAFT, IDLE	1	1						
11	1	129150-25101	GEAR ASSY, IDLE	1	1						
14	2	129150-25920	BUSH, IDLE GEAR	1	1						1
15	1	26106-080452	BOLT, M8X 45 PLATED	2	2						
16	1	129150-25900	GEAR, PUMP	1	1						
17	1	22217-120000	WASHER, SPRING 12	1	1						
18	1	26716-120002	NUT, M12	1	1						

Remarks
(1) REPAIR PART.

N:Old ←Yes/No→ New. Q:Old ←No/Yes→ New. R:Old ←Yes/Yes→ New. S:Old ←No/No→ New. W:Add. Z:Discontinued. F:Interchangeable by set. K:Q'ty Change

Copyright (C) YANMAR GLOBAL CS CO., LTD. All RightsReserved.

Fig.8. CRANKSHAFT & PISTON

(A)=3TNE84-GB1
(B)=3TNE84-GB1S
(C)=
(D)=
(E)=
(F)=

No.	Lev.	Parts No.	Description	Q'ty (A)	(B)	(C)	(D)	(E)	(F)	I	R
1	1	129001-21000	CRANKSHAFT ASSY	1	1						
2	2	129100-01580	PIN, M8X16	1	1						
5	2	129150-21200	GEAR, CRANKSHAFT	1	1						
6	2	22512-070140	KEY, 7X 14	1	1						
8	1	22351-040010	PIN, SPRING 4.0X10	1	1						
9	1	171340-21650	V-PULLEY	1	1						
10	1	129795-21661	WASHER	1	1						
11	1	121850-21680	BOLT	1	1						
12	1	121111-21501	BOLT, FLYWHEEL	6	6						
13	1	171340-21590	FLYWHEEL ASSY	1	1						
16	2	124550-21600	GEAR, RING	1	1						
17	1	129002-22081	PISTON ASSY	3	3						
19	2	129002-22500	RING SET, PISTON	3	3						
23	1	129202-22300	PIN, PISTON D26 L70	3	3						
24	1	22252-000260	RING, 26	6	6						
25	1	729402-23100	ROD ASSY, CONNECTING	3	3						
29	2	129100-23910	BEARING, PISTON PIN	3	3						1
30	2	121550-23200	BOLT, CONNECTING ROD	6	6						
31	2	129150-23600	BEARING, CRANK PIN	3	3						
33	1	129002-22901	PISTON ASSY, 0.25 OS	3	3						2
35	2	129002-22950	RING SET, 0.25 OS	3	3						2
39	1	129150-23610	BEARING, 0.25 US	3	3						3

Remarks
(1) REPAIR PART.
(2) OVER-SIZE(O.S=0.25)PART.
(3) UNDER-SIZE(U.S=0.25)PART.

N:Old $\frac{\text{Yes}}{\text{No}}$ New. Q:Old $\frac{\text{No}}{\text{Yes}}$ New. R:Old $\frac{\text{Yes}}{\text{Yes}}$ New. S:Old $\frac{\text{No}}{\text{No}}$ New. W:Add. Z:Discontinued. F:Interchangeable by set. K:Q'ty Change

Copyright (C) YANMAR GLOBAL CS CO., LTD. All RightsReserved.

Fig.9. LUB. OIL SYSTEM

(A)=3TNE84-GB1
(B)=3TNE84-GB1S
(C)=
(D)=
(E)=
(F)=

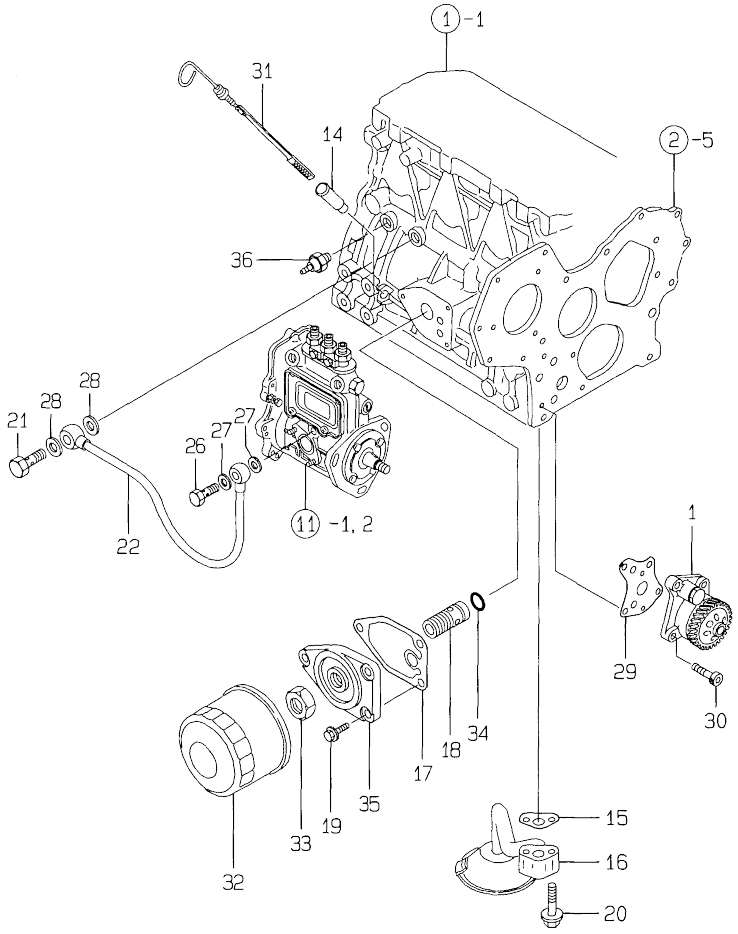

No.	Lev.	Parts No.	Description	Q'ty (A)	(B)	(C)	(D)	(E)	(F)	I	R
1	1	129001-32001	PUMP ASSY, OIL	1	1						
14	1	121520-34810	GUIDE, DIPSTICK	1	1						
15	1	129150-35041	GASKET	1	1						
16	1	129100-35301	PIPE ASSY, OIL INLET	1	1						
17	1	129150-35111	GASKET	1	1						
18	1	129001-35300	BOLT, FILTER	1	1						
19	1	26106-080202	BOLT, M8X 20 PLATED	3	3						
20	1	26106-080352	BOLT, M8X 35 PLATED	2	2						
21	1	124160-39140	BOLT, PIPE JOINT M10	1	1						
22	1	129150-39450	PIPE ASSY, OIL	1	1						
26	1	124550-59820	BOLT, PIPE JOINT M8	1	1						
27	1	23414-080000	GASKET, 8X1.0	2	2						
28	1	23414-100000	GASKET, 10X1.0	2	2						
29	1	129150-32020	GASKET, PUMP	1	1						
30	1	26450-060252	BOLT, M6X 25	4	4						
31	1	171420-34820	DIPSTICK, OIL	1	1						
32	1	129150-35151	FILTER, D80XL80	1	1						
33	1	129150-35350	NUT	1	1						
34	1	24311-000160	O-RING, 1AP16.0	1	1						
35	1	129150-35101	BRACKET, STRAINER	1	1						
36	1	124160-39450	SWITCH, 0.5KG	1	1						

N:Old ←Yes/No→ New. Q:Old ←No/Yes→ New. R:Old ←Yes/Yes→ New. S:Old ←No/No→ New. W:Add. Z:Discontinued. F:Interchangeable by set. K:Q'ty Change

Copyright (C) YANMAR GLOBAL CS CO., LTD. All RightsReserved.

Fig.10. COOLING WATER SYSTEM

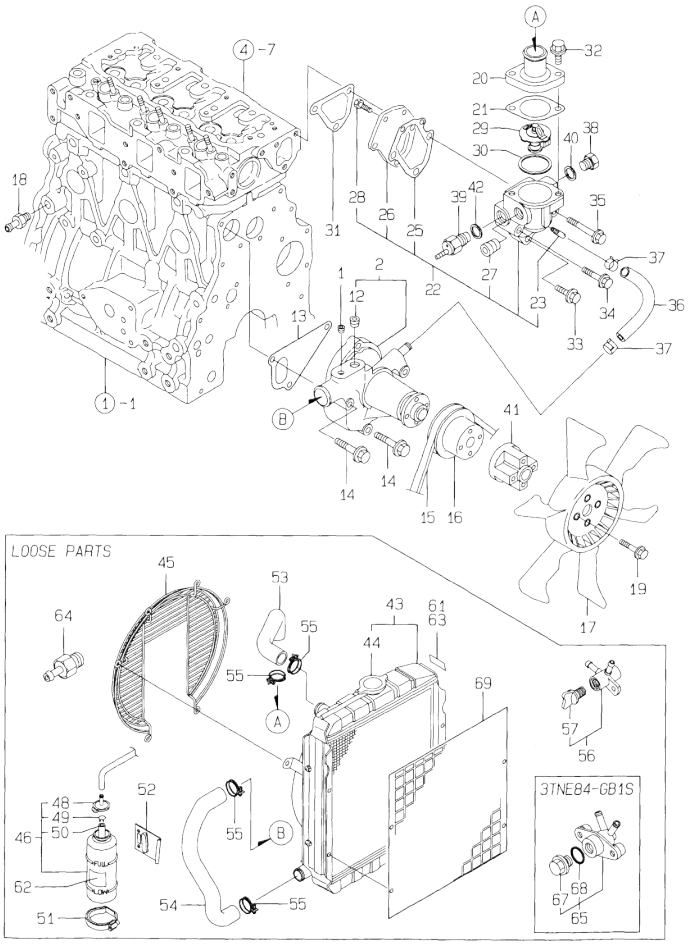

(A)=3TNE84-GB1
(B)=3TNE84-GB1S
(C)=
(D)=
(E)=
(F)=

No.	Lev.	Parts No.	Description	Q'ty (A)	(B)	(C)	(D)	(E)	(F)	I	R
1	1	121850-11860	PLUG, PT1/4	1	1						
2	1	129100-42003	PUMP ASSY, WATER	1	1						
12	2	23871-030000	PLUG, R03	1	1						
13	1	129100-42020	GASKET, WATER PUMP	1	1						
14	1	26106-080602	BOLT, M8X 60 PLATED	3	3						
15	1	25132-003700	V-BELT, A37	1	1						
16	1	129155-42350	V-PULLEY	1	1						
17	1	171340-44740	FAN, COOLING D335XNF	1	1						
18	1	121550-49111	JOINT, PT1/4	1	1						
19	1	26106-060352	BOLT, M6X 35 PLATED	4	4						
20	1	129350-49530	COVER, THERMOSTAT	1	1						
21	1	129795-49551	GASKET	1	1						
22	1	129100-49800	CASE ASSY,THERMOSTAT	1	1						
23	2	124770-11770	JOINT, PIPE PT1/8	1	1						
25	2	129100-49820	GASKET	1	1						
26	2	129100-49830	COVER, THERMOSTAT	1	1						
27	2	23871-030000	PLUG, R03	1	1						
28	2	26116-060162	BOLT, M6X 16 PLATED	2	2						
29	1	129155-49800	THERMOSTAT, 71	1	1						
30	1	129150-49811	GASKET, THERMOSTAT	1	1						
31	1	129100-49840	GASKET	1	1						
32	1	26106-080202	BOLT, M8X 20 PLATED	2	2						
33	1	26106-080252	BOLT, M8X 25 PLATED	1	1						
34	1	26106-080502	BOLT, M8X 50 PLATED	1	1						
35	1	26106-080602	BOLT, M8X 60 PLATED	1	1						
36	1	129132-49050	PIPE, WATER	1	1						
37	1	23000-016000	CLAMP, 16	2	2						
38	1	121450-42450	PLUG, M16	1	1						
39	1	121250-44901	SWITCH, 110	1	1						
40	1	124465-44950	GASKET, 16	1	1						
41	1	171353-44760	SPACER, FAN	1	1						
42	1	124465-44950	GASKET, 16	1	1						
43	1	129120-44500	RADIATOR	1	1						
44	2	123682-44210	CAP, RADIATOR	1	1						
45	1	129120-44560	PROTECTOR, FAN	1	1						
46	1	124450-44510	TANK ASSY, SUB	1	1						
48	2	124450-44530	CAP	1	1						
49	2	124450-44560	RETAINER	1	1						
50	2	23061-070230	PIPE, 7X 230	1	1						
51	1	124450-44550	BAND	1	1						
52	1	121256-44600	BRACKET, SUB TANK	1	1						
53	1	171301-49010	PIPE, WATER	1	1						
54	1	129211-49020	PIPE, WATER	1	1						
55	1	23010-038000	CLAMP, 38	4	4						
56	1	129150-49100	COCK ASSY, 3-WAY	1							
57	2	129150-49080	COCK, DRAIN	1							
61	1	124764-44800	LABEL, RADIATOR	1	1						
62	1	124764-44810	LABEL, SUB TANK	1	1						
63	1	121400-44910	LABEL, RADIATOR	1	1						
64	1	129137-49100	JOINT	1	1						
65	1	121450-49110	COCK ASSY, 3-WAY		1						

N:Old ←Yes/No→ New. Q:Old ←No/Yes→ New. R:Old ←Yes/Yes→ New. S:Old ←No/No→ New. W:Add. Z:Discontinued. F:Interchangeable by set. K:Q'ty Change

++ CONTINUE ++

Copyright (C) YANMAR GLOBAL CS CO., LTD. All RightsReserved.

Fig.10. COOLING WATER SYSTEM

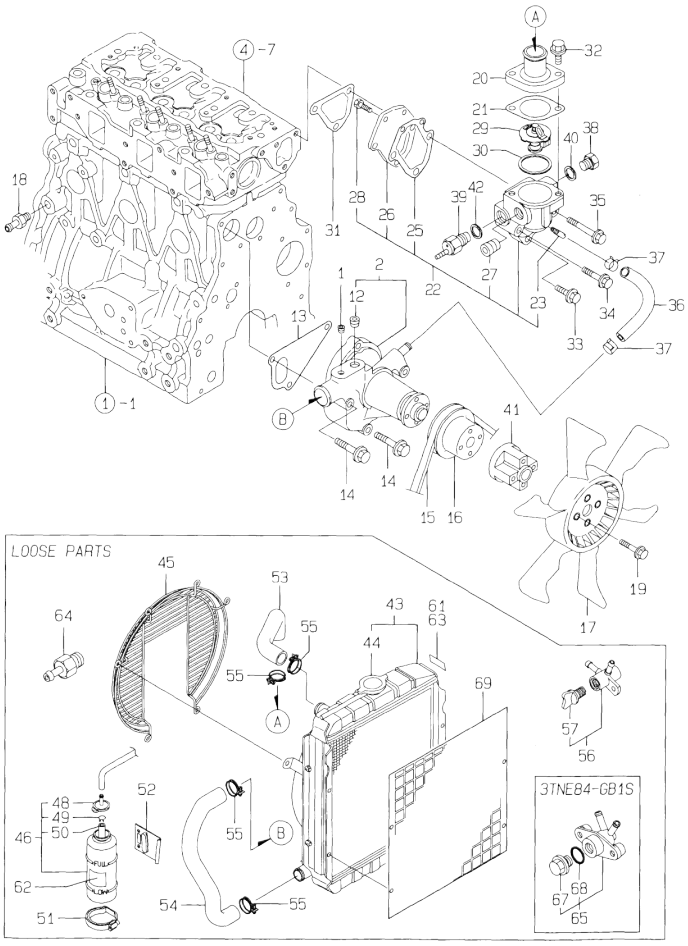

(A)=3TNE84-GB1
(B)=3TNE84-GB1S
(C)=
(D)=
(E)=
(F)=

No.	Lev.	Parts No.	Description	Q'ty (A)	(B)	(C)	(D)	(E)	(F)	I	R
67	2	121250-49121	PLUG, DRAIN		1						
68	2	24311-000160	O-RING, 1AP16.0		1						
69	1	129111-44590	PROTECTOR	1							

N:Old ←Yes/No→ New. Q:Old ←No/Yes→ New. R:Old ←Yes/Yes→ New. S:Old ←No/No→ New. W:Add. Z:Discontinued. F:Interchangeable by set. K:Q'ty Change

Copyright (C) YANMAR GLOBAL CS CO., LTD. All RightsReserved.

Fig.11. FUEL INJECTION PUMP

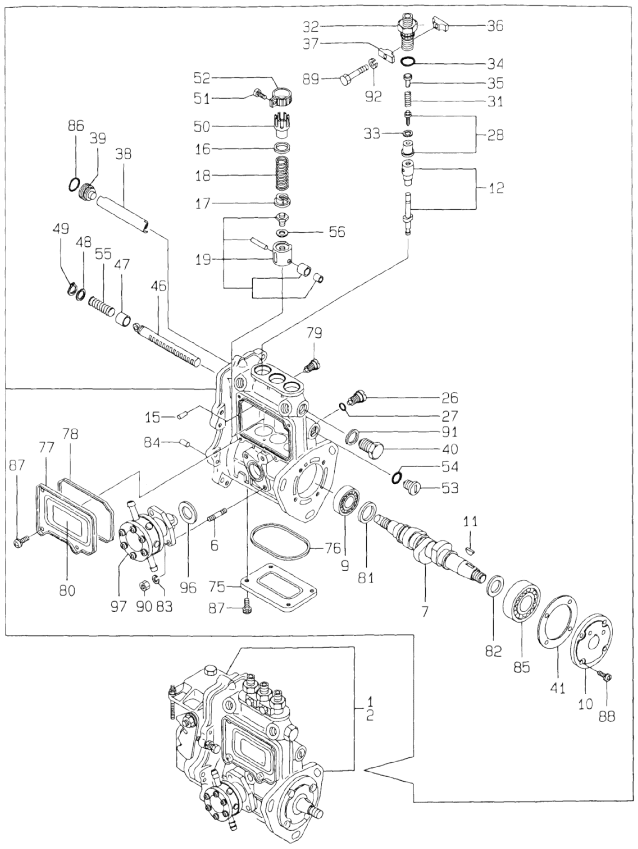

Remarks
(1)GOVERNOR ASSY(FIG.12)IS
INCORPORATED IN THIS FUEL
INJECTION PUMP ASSY(REF.NO.1,2).

(A)=3TNE84-GB1
(B)=3TNE84-GB1S
(C)=
(D)=
(E)=
(F)=

No.	Lev.	Parts No.	Description	Q'ty (A)	(B)	(C)	(D)	(E)	(F)	I	R
1	1	729002-51310	PUMP ASSY, INJECTION	1							1
2	1	729218-51310	PUMP ASSY, INJECTION		1						1
6	2	129155-51020	STUD	2	2						
7	2	119810-51040	CAMSHAFT	1	1						
9	2	129155-51050	BEARING, 17BM001D	1	1						
10	2	129155-51060	SUPPORT, CAMSHAFT	1	1						
11	2	122710-51090	KEY	1	1						
12	2	129506-51100	PLUNGER ASSY	3	3						
15	2	129155-51140	PIN	3	3						
16	2	174307-51170	RETAINER, SPRING A	3	3						
17	2	129155-51180	RETAINER, SPRING	3	3						
18	2	124950-51190	SPRING, PLUNGER	3	3						
19	2	129155-51200	TAPPET ASSY	3	3						
26	2	129155-51270	STOPPER, TAPPET	3	3						
27	2	129155-51280	O-RING, S6	3	3						
28	2	129100-51300	VALVE ASSY, DELIVERY	3	3						
31	2	129155-51320	SPRING, DELIVERY	3	3						
32	2	129155-51340	RETAINER	3	3						
33	2	124550-51350	GASKET, DELIVERY	3	3						
34	2	124550-51370	O-RING	3	3						
35	2	129155-51370	STOPPER, VALVE	3	3						
36	2	129155-51380	STOPPER	2	2						
37	2	129155-51390	STOPPER	2	2						
38	2	129155-51400	DEFLECTOR	1	1						
39	2	129155-51410	BOLT	1	1						
40	2	129155-51420	PLUG, M16	1	1						
41	2	129155-51450	SHIM SET, ADJUSTING	1	1						
46	2	129155-51500	RACK, CONTROL	1	1						
47	2	129155-51521	BUSH, RACK	1	1						
48	2	129155-51530	SPACER	1	1						
49	2	129155-51540	CIRCLIP	1	1						
50	2	129155-51550	PINION, CONTROL	3	3						
51	2	122117-51560	SCREW	3	3						
52	2	174307-51560	PINION	3	3						
53	2	129155-51570	PLUG, M12	1	1						
54	2	129155-51580	O-RING	1	1						
55	2	129155-51591	SPRING, RACK	1	1						
56	2	129155-51600	SHIM SET, ADJUSTING	3	3						
75	2	129155-51700	COVER	1	1						
76	2	129155-51710	GASKET	1	1						
77	2	129155-51750	COVER	1	1						
78	2	129155-51760	GASKET	1	1						
79	2	129155-51790	STOOPER, RACK	1	1						
80	2	129156-51910	LABEL, CAUTION	1	1						
81	2	129155-51930	SPACER, T=3.25	1	1						
82	2	129155-51940	SPACER, T=1.5	1	1						
83	2	22217-060000	WASHER, SPRING 6	2	2						
84	2	22351-050010	PIN, SPRING 5.0X10	2	2						
85	2	24101-063034	BEARING, BALL 6303	1	1						
86	2	24341-000160	O-RING, 1AS16.0	1	1						
87	2	26022-050102	SCREW, M5X10	8	8						

N:Old ←Yes/No→ New. Q:Old ←No/Yes→ New. R:Old ←Yes/Yes→ New. S:Old ←No/No→ New. W:Add. Z:Discontinued. F:Interchangeable by set. K:Q'ty Change

++ CONTINUE ++

Copyright (C) YANMAR GLOBAL CS CO., LTD. All RightsReserved.

Fig.11. FUEL INJECTION PUMP

(A)=3TNE84-GB1
(B)=3TNE84-GB1S
(C)=
(D)=
(E)=
(F)=

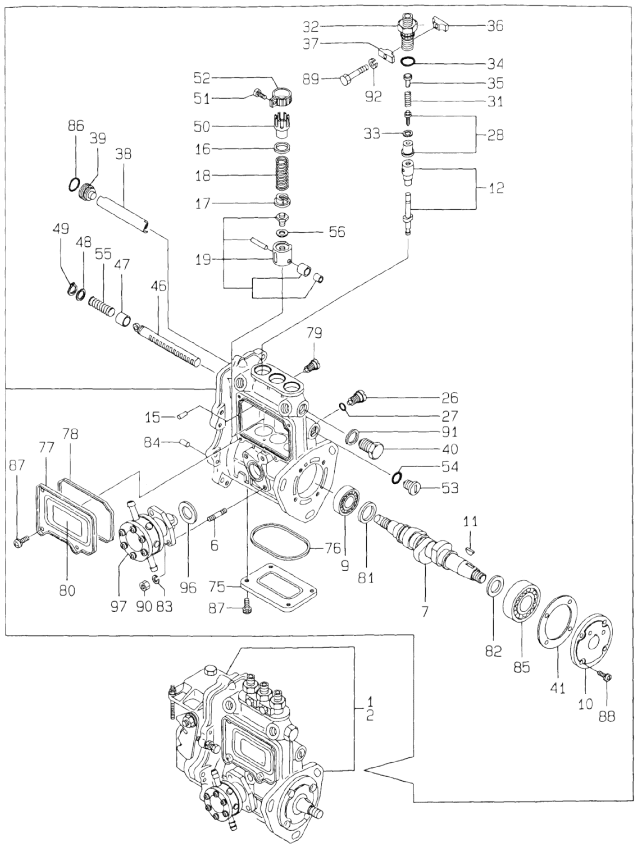

No.	Lev.	Parts No.	Description	Q'ty (A)	(B)	(C)	(D)	(E)	(F)	I	R
88	2	26022-060162	SCREW, M6X16	4	4						
89	2	26116-050302	BOLT, M5X 30 PLATED	2	2						
90	2	26716-060002	NUT, M6	2	2						
91	2	22190-160002	WASHER, SEAL 16	1	1						
92	2	22217-050000	WASHER, SPRING 5	2	2						
96	2	129155-52050	GASKET	1	1						
97	2	129100-52100	PUMP ASSY, FUEL FEED	1	1						

Remarks
(1)GOVERNOR ASSY(FIG.12)IS
INCORPORATED IN THIS FUEL
INJECTION PUMP ASSY(REF.NO.1,2).

N:Old ←Yes/No→ New. Q:Old ←No/Yes→ New. R:Old ←Yes/Yes→ New. S:Old ←No/No→ New. W:Add. Z:Discontinued. F:Interchangeable by set. K:Q'ty Change

Copyright (C) YANMAR GLOBAL CS CO., LTD. All RightsReserved.

Fig.12. GOVERNOR

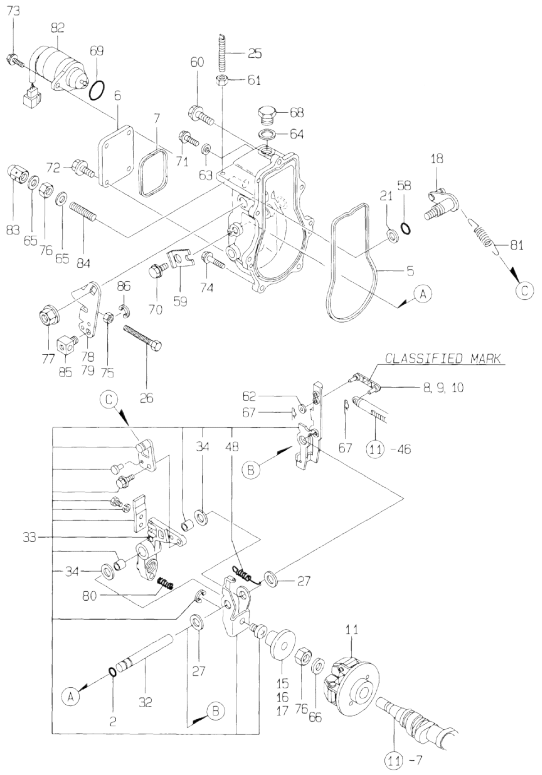

(A)=3TNE84-GB1
(B)=3TNE84-GB1S
(C)=
(D)=
(E)=
(F)=

No.	Lev.	Parts No.	Description	Q'ty (A)	(B)	(C)	(D)	(E)	(F)	I	R
2	2	129155-51280	O-RING, S6	1	1						
5	2	129052-61050	GASKET	1	1						
6	2	129052-61060	COVER, GOVERNOR CASE	1	1						
7	2	129052-61070	GASKET	1	1						
8	2	129155-61120	LINK, L=30 MARK 0	1	1						1
9	2	129155-61130	LINK, L=31 MARK 1	1	1						1
10	2	129155-61140	LINK, L=30.5 MARK 05	1	1						1
11	2	171488-61200	WEIGHT ASSY,GOVERNOR	1	1						
15	2	129155-61341	SLEEVE	1	1						2
16	2	129155-61350	SLEEVE, L=24.9	1	1						2
17	2	129155-61360	SLEEVE, L=25.2	1	1						2
18	2	129100-61400	SHAFT ASSY	1	1						
21	2	129155-61430	SPACER	1	1						
25	2	129155-61450	BOLT, LIMITER	1	1						
26	2	129155-61460	BOLT, IDLE	1	1						
27	2	129155-61480	SPACER ASSY	2	2						
32	2	129052-61390	SHAFT	1	1						
33	2	129412-61500	LEVER ASSY, GOVERNOR	1	1						
34	3	174307-51700	SHIM SET	2	2						
48	3	119843-61540	SPRING, SET	1	1						
58	2	129155-61830	O-RING, S10	1	1						
59	2	119660-61901	RETAINER, SHAFT	1	1						
60	2	129155-61950	BOLT	1	1						
61	2	124550-66370	NUT, M6	1	1						
62	2	22117-040000	WASHER, 4	1	1						
63	2	22190-060002	WASHER, SEAL 6	1	1						
64	2	22190-100002	WASHER, SEAL 10	1	1						
65	2	22190-120002	WASHER, SEAL 12	2	2						
66	2	22287-120000	WASHER, 12	1	1						
67	2	22372-040000	PIN, SNAP 4	2	2						
68	2	23887-100002	PLUG, 10	1	1						
69	2	24341-000280	O-RING, 1AS28.0	1	1						
69-1	2	158552-61900	O-RING	1	1						N
	(A=EXXXXX)	(B=EXXXXX)									
70	2	26106-060102	BOLT, M6X 10 PLATED	1	1						
71	2	26106-060102	BOLT, M6X 10 PLATED	1	1						
72	2	26106-060102	BOLT, M6X 10 PLATED	4	4						
73	2	26106-060142	BOLT, M6X 14 PLATED	2	2						
74	2	26106-060202	BOLT, M6X 20 PLATED	6	6						
75	2	26756-060002	NUT, LOCK M6	1	1						
76	2	26776-120002	NUT, LOCK M12	2	2						
77	1	26366-080002	NUT, M8	1	1						
78	1	129100-61440	LEVER, CONTROL		1						
79	1	171488-61440	LEVER, CONTROL	1							
80	1	129500-61650	SPRING, FUEL CONTROL	1	1						
81	1	129477-61720	SPRING, GOVERNOR	1	1						
82	1	119653-77950	SOLENOID, STOP	1	1						
83	1	26687-120002	NUT, CAP M12	1	1						
84	1	129155-61470	BOLT, CONTROL	1	1						
85	1	124756-67510	RETAINER	1	1						
86	1	22272-000070	RING, E- 7	1	1						

N:Old ←Yes/No→ New. Q:Old ←No/Yes→ New. R:Old ←Yes/Yes→ New. S:Old ←No/No→ New. W:Add. Z:Discontinued. F:Interchangeable by set. K:Q'ty Change

Remarks
(1) SELECTIVE PARTS: CERTAIN THE CLASSIFICATION MARK, THEN PLACE YOUR ORDER.(REFER TO ILLUSTRATION).
(2) SELECTIVE PARTS.
* THIS FIGURE(GOVERNOR ASSY) IS INCORPORATED IN THE FUEL INJECTION PUMP ASSY(FIG.11).

Copyright (C) YANMAR GLOBAL CS CO., LTD. All RightsReserved.

Fig.13. FUEL INJECTION VALVE

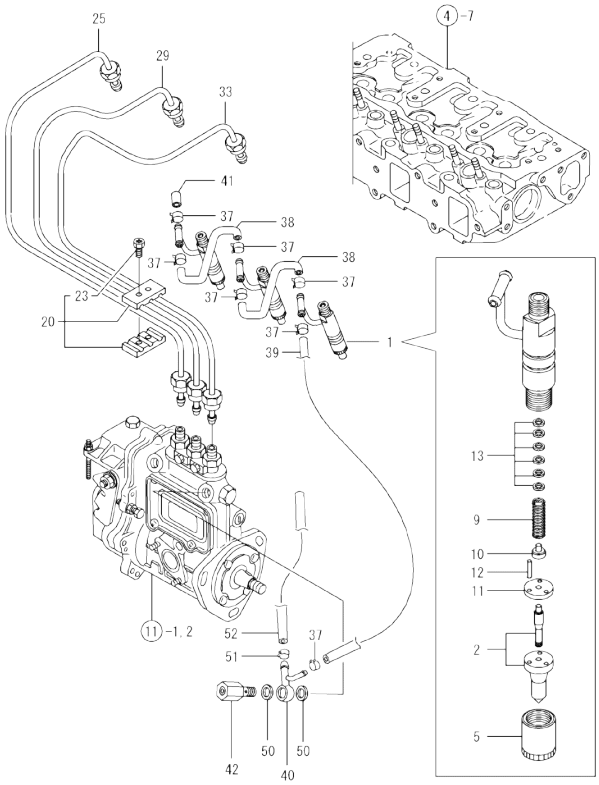

(A)=3TNE84-GB1
(B)=3TNE84-GB1S
(C)=
(D)=
(E)=
(F)=

No.	Lev.	Parts No.	Description	Q'ty (A)	(B)	(C)	(D)	(E)	(F)	I	R
1	1	719810-53100	VALVE ASSY,INJECTION	3	3						
2	2	119810-53000	VALVE ASSY,INJECTION	3	3						
5	2	114250-53080	NUT, NOZZLE D16.95	3	3						
9	2	114250-53120	SPRING, NOZZLE	3	3						
10	2	114250-53130	SEAT, SPRING	3	3						
11	2	114250-53140	PLATE	3	3						
12	2	114250-53210	PIN	6	6						
13	2	114250-53400	SHIM SET	3	3						
20	1	129150-59120	RETAINER, PIPE	1	1						
23	2	129150-59131	BOLT, M4X14	2	2						
25	1	129100-59912	PIPE ASSY, INJECTION	1	1						
29	1	129100-59922	PIPE ASSY, INJECTION	1	1						
33	1	129100-59932	PIPE ASSY, INJECTION	1	1						
37	1	124066-59100	CLIP, HOSE 8	7	7						
38	1	121250-59550	PIPE, FUEL D8X120	2	2						
39	1	119840-59560	PIPE, FUEL RETURN	1	1						
40	1	119840-59570	JOINT	1	1						
41	1	129150-59580	CAP	1	1						
42	1	129100-59951	VALVE ASSY, CHECK	1	1						
50	1	23414-120000	GASKET, 12X1.0	2	2						
51	1	124766-59050	CLIP, HOSE 12	2	2						
52	1	105025-59750	PIPE, FUEL	1	1						

N:Old ←Yes/No→ New. Q:Old ←No/Yes→ New, R:Old ←Yes/Yes→ New, S:Old ←No/No→ New, W:Add, Z:Discontinued, F:Interchangeable by set, K:Q'ty Change

Copyright (C) YANMAR GLOBAL CS CO., LTD. All RightsReserved.

Fig.14. FUEL LINE

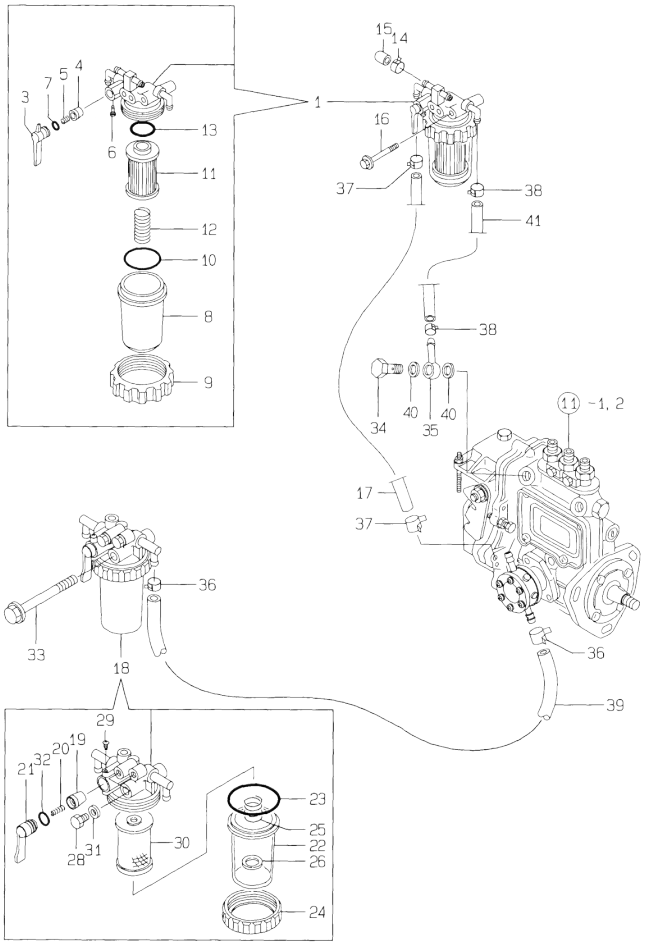

(A)=3TNE84-GB1
(B)=3TNE84-GB1S
(C)=
(D)=
(E)=
(F)=

No.	Lev.	Parts No.	Description	Q'ty (A)	(B)	(C)	(D)	(E)	(F)	I	R
1	1	129100-55621	FILTER ASSY, FUEL	1	1						
3	2	129100-55670	LEVER	1	1						
4	2	104200-55321	VALVE, TAPER	1	1						
5	2	104200-55330	SPRING, VALVE	1	1						
6	2	104200-55750	SCREW, M4	1	1						
7	2	24311-240100	O-RING, 1AP10A	1	1						
8	2	129100-55680	CUP, STRAINER	1	1						
9	2	129100-55690	RING, RETAINING	1	1						
10	2	24321-000650	O-RING, 1AG65.0	1	1						
11	2	129100-55650	ELEMENT	1	1						
12	2	129100-55700	SPRING	1	1						
13	2	24311-000160	O-RING, 1AP16.0	1	1						
14	1	124066-59100	CLIP, HOSE 8	1	1						
15	1	129150-59580	CAP	1	1						
16	1	26014-080702	BOLT, M8X 70	1	1						
17	1	105025-59750	PIPE, FUEL	1	1						
18	1	129335-55700	SEPARATOR ASSY,WATER	1	1						
19	2	104200-55321	VALVE, TAPER	1	1						
20	2	104200-55330	SPRING, VALVE	1	1						
21	2	104200-55341	HANDLE	1	1						
22	2	124064-55510	COVER	1	1						
23	2	102103-55520	O-RING	1	1						
24	2	110250-55610	RING, RETAINING	1	1						
25	2	121257-55720	SPRING	1	1						
26	2	121257-55731	FLOAT	1	1						
28	2	101720-55750	PLUG, 6	2	2						
29	2	104200-55750	SCREW, M4	1	1						
30	2	171081-55910	SCREEN	1	1						
31	2	23418-060000	GASKET, 6X1.0	2	2						
32	2	24311-240100	O-RING, 1AP10A	1	1						
33	1	26014-080702	BOLT, M8X 70	1	1						
34	1	103854-39140	BOLT, PIPE JOINT	1	1						
35	1	101304-59020	JOINT, PIPE 12	1	1						
36	1	124766-59050	CLIP, HOSE 12	2	2						
37	1	124766-59050	CLIP, HOSE 12	2	2						
38	1	124766-59050	CLIP, HOSE 12	2	2						
39	1	129612-59520	PIPE, FUEL	1	1						
40	1	22190-120002	WASHER, SEAL 12	2	2						
41	1	129555-59510	PIPE, D13/7.5X180	1	1						

N:Old ◄Yes/No► New. Q:Old ◄No/Yes► New. R:Old ◄Yes/Yes► New. S:Old ◄No/No► New. W:Add. Z:Discontinued. F:Interchangeable by set. K:Q'ty Change

Copyright (C) YANMAR GLOBAL CS CO., LTD. All RightsReserved.

Fig.15. STARTING MOTOR

(A)=3TNE84-GB1
(B)=3TNE84-GB1S
(C)=
(D)=
(E)=
(F)=

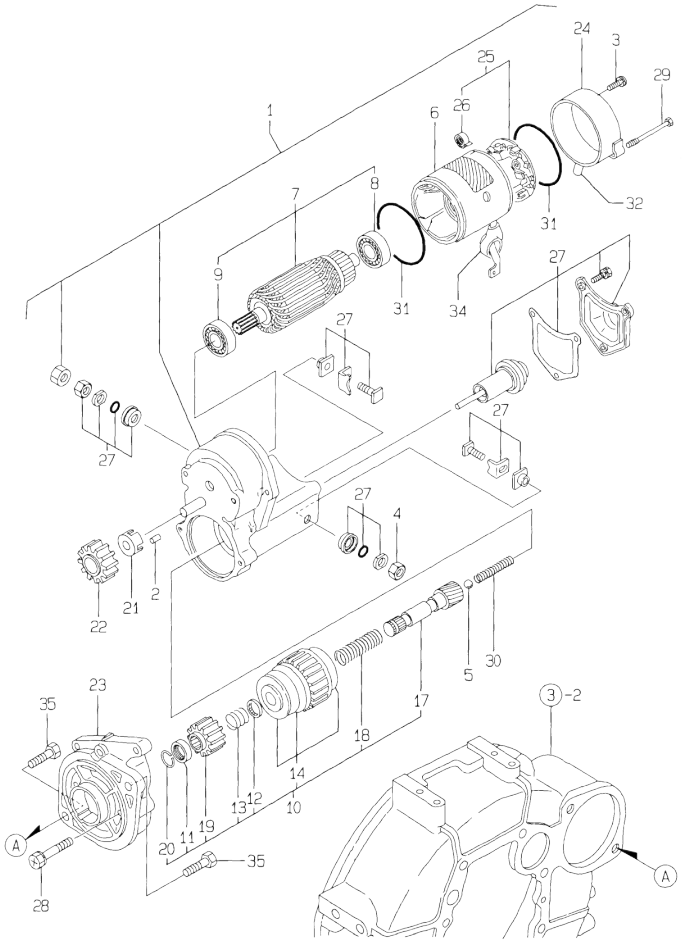

No.	Lev.	Parts No.	Description	Q'ty (A)	(B)	(C)	(D)	(E)	(F)	I	R
1	1	129129-77010	STARTER ASSY	1	1						
2	2	X0283060061	ROLLER	5	5						
3	2	129129-77460	SCREW	2	2						
4	2	X9490561370	NUT	1	1						
5	2	X9491200240	BALL	1	1						
6	2	129129-77210	YOKE ASSY	1	1						
7	2	129129-77220	ARMATURE ASSY	1	1						
8	3	129129-77230	BEARING	1	1						
9	3	129129-77240	BEARING	1	1						
10	2	129129-77250	STARTER	1	1						
11	3	X0280210230	NUT	1	1						
12	3	X0283270140	RETAINER	1	1						
13	3	X9491703371	SPRING, COIL	1	1						
14	3	129129-77390	CLUTCH ASSY	1	1						
17	3	129129-77400	SHAFT	1	1						
18	3	129129-77410	SPRING, COIL	1	1						
19	3	129129-77420	PINION, STARTER	1	1						
20	3	129129-77430	RING	1	1						
21	2	129129-77260	RETAINER	1	1						
22	2	129129-77270	PINION	1	1						
23	2	129129-77280	HOUSING	1	1						
24	2	129129-77290	FRAME	1	1						
25	2	129129-77300	HOLDER ASSY	1	1						
26	3	X9491730461	SPRING	4	4						
27	2	129129-77310	SWITCH ASSY	1	1						
28	2	129129-77320	BOLT	2	2						
29	2	129129-77330	BOLT	2	2						
30	2	129129-77340	SPRING	1	1						
31	2	129129-77350	O-RING	2	2						
32	2	129129-77362	COVER	1	1						
34	2	129129-77380	CAP	1	1						
35	1	26116-120252	BOLT, M12X 25 PLATED	2	2						

N:Old ◄Yes/No► New. Q:Old ◄No/Yes► New. R:Old ◄Yes/Yes► New. S:Old ◄No/No► New. W:Add. Z:Discontinued. F:Interchangeable by set. K:Q'ty Change

Copyright (C) YANMAR GLOBAL CS CO., LTD. All RightsReserved.

Fig.16. GENERATOR

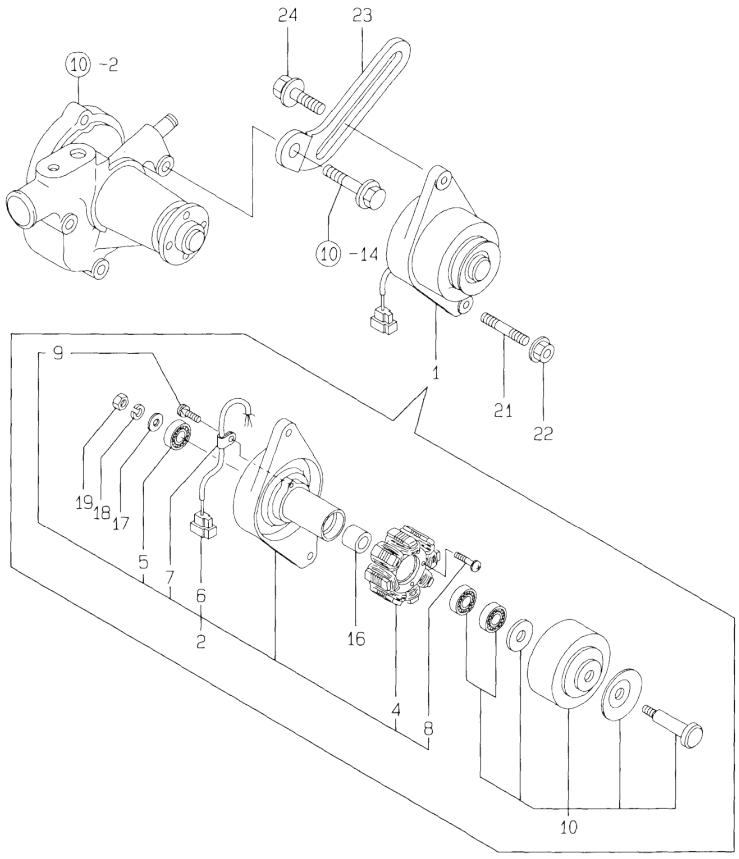

(A)=3TNE84-GB1
(B)=3TNE84-GB1S
(C)=
(D)=
(E)=
(F)=

No.	Lev.	Parts No.	Description	Q'ty (A)	(B)	(C)	(D)	(E)	(F)	I	R
1	1	171301-77201	DYNAMO ASSY, 15A	1	1						
2	2	XM08137	PLATE ASSY	1	1						
4	3	XM08180	STATOR SET	1	1						
5	3	XM27436	BEARING, BALL	1	1						
6	3	XM17878	COUPLER	1	1						
7	3	XM36410	CLAMP	1	1						
8	3	26022-040252	SCREW, M4X25	2	2						
9	3	XYSPS4008	SCREW	1	1						
10	2	XM82184	FLYWHEEL ASSY	1	1						
16	2	106383-44720	SPACER	1	1						
17	2	106383-44730	WASHER	1	1						
18	2	22212-100000	SPRING WASHER 10	1	1						
19	2	26716-100002	NUT, M10	1	1						
21	1	129795-01900	STUD	1	1						
22	1	26366-100002	NUT, M10	1	1						
23	1	129400-77330	ADJUSTER	1	1						
24	1	26014-080252	BOLT, M8X 25	1	1						

N:Old ◄Yes/No► New. Q:Old ◄No/Yes► New. R:Old ◄Yes/Yes► New. S:Old ◄No/No► New. W:Add. Z:Discontinued. F:Interchangeable by set. K:Q'ty Change

Copyright (C) YANMAR GLOBAL CS CO., LTD. All RightsReserved.

Fig.17. ELECTRICAL PARTS

(A)=3TNE84-GB1
(B)=3TNE84-GB1S
(C)=
(D)=
(E)=
(F)=

No.	Lev.	Parts No.	Description	Q'ty (A)	(B)	(C)	(D)	(E)	(F)	I	R
1	1	119643-66900	DIODE	1	1						
2	1	170022-67100	CABLE, PUSH-PULL		1						
3	1	119660-77710	LIMITER, CURRENT 15A	1	1						
3-1	1	119660-77711	LIMITER, CURRENT 15A	1	1					N	
	(A=E47349)	(B=E47355)									
4	1	171301-77720	COUPLER	1	1						
5	1	119643-77900	CONNECTOR, STARTER	1	1						
6	1	119650-77910	RELAY ASSY, GLOW	1	1						
9	1	119632-77920	TIMER	1	1						
10	1	129115-91250	SWITCH ASSY	1	1						
12	2	129115-91270	KEY ASSY	1	1						
13	1	170038-91310	LAMP	1	1						

N:Old ←Yes/No→ New. Q:Old ←No/Yes→ New. R:Old ←Yes/Yes→ New. S:Old ←No/No→ New. W:Add. Z:Discontinued. F:Interchangeable by set. K:Q'ty Change

Copyright (C) YANMAR GLOBAL CS CO., LTD. All RightsReserved.

Fig.18. GASKET SET & TOOL

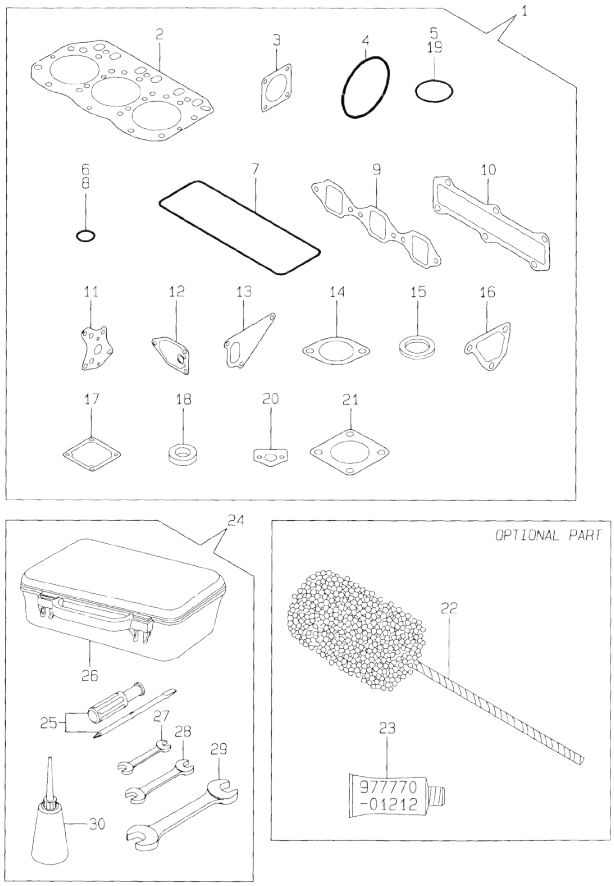

(A)=3TNE84-GB1
(B)=3TNE84-GB1S
(C)=
(D)=
(E)=
(F)=

No.	Lev.	Parts No.	Description	Q'ty (A)	(B)	(C)	(D)	(E)	(F)	I	R
1	1	729002-92700	GASKET SET	1	1						1
2	2	129002-01331	GASKET, HEAD	1	1						
3	2	124240-01883	GASKET	1	1						
4	2	121850-51960	O-RING	1	1						
5	2	24311-000320	O-RING, 1AP32.0	2	2						
6	2	24311-000120	O-RING, 1AP12.0	3	3						
7	2	129001-11310	GASKET, BONNET	1	1						
8	2	24311-000160	O-RING, 1AP16.0	3	3						
9	2	129150-12111	GASKET, MANIFOLD	1	1						
10	2	129001-13110	GASKET	1	1						
11	2	129150-32020	GASKET, PUMP	1	1						
12	2	129150-35111	GASKET	1	1						
13	2	129100-42020	GASKET, WATER PUMP	1	1						
14	2	129795-49551	GASKET	1	1						
15	2	129150-49811	GASKET, THERMOSTAT	1	1						
16	2	129100-49840	GASKET	1	1						
17	2	129150-77511	GASKET	1	1						
18	2	124465-44950	GASKET, 16	2	2						
19	2	24341-000250	O-RING, 1AS25.0	1	1						
20	2	129150-35041	GASKET	1	1						
21	2	124701-11911	GASKET, SILENCER	1	1						
22	1	129400-92420	HONE	1	1						1
23	1	977770-01212	GASKET, LIQUID	1	1						1
24	1	721400-92102	BOX ASSY, TOOL	1	1						
25	2	104200-92350	DRIVER, SCREW	1	1						
26	2	104200-92600	BOX, TOOL	1	1						
27	2	28110-100120	SPANNER, 10X12	1	1						
28	2	28110-140170	SPANNER, 14X17	1	1						
29	2	28110-190220	SPANNER, 19X22	1	1						
30	2	28210-000140	OILER	1	1						

Remarks
(1) OPTIONAL PART.

N:Old $\frac{\text{Yes}}{\text{No}}$ New. Q:Old $\frac{\text{No}}{\text{Yes}}$ New. R:Old $\frac{\text{Yes}}{\text{Yes}}$ New. S:Old $\frac{\text{No}}{\text{No}}$ New. W:Add. Z:Discontinued. F:Interchangeable by set. K:Q'ty Change

Copyright (C) YANMAR GLOBAL CS CO., LTD. All RightsReserved.

Fig.19. CYLINDER BLOCK

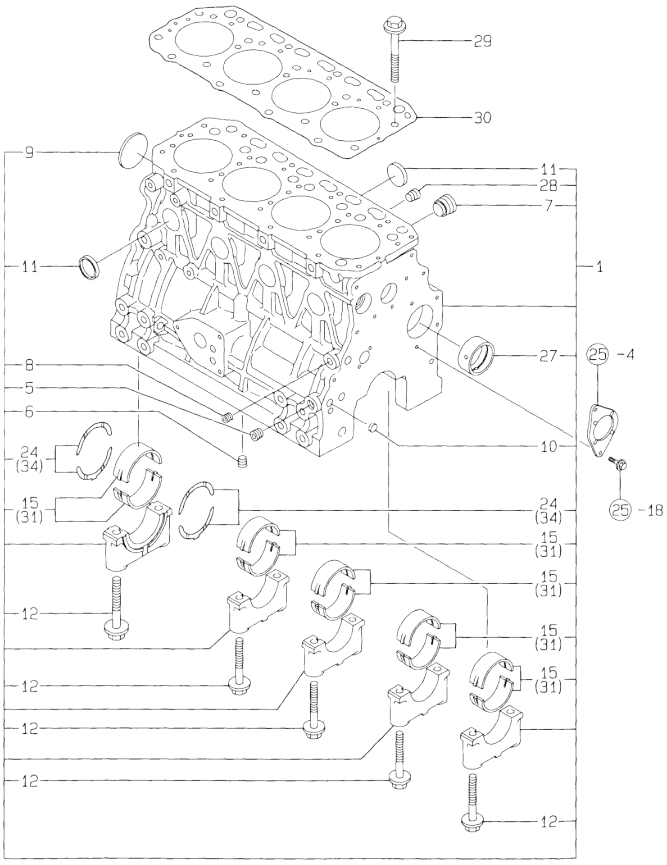

(A)=4TNE84-GB1
(B)=4TNE84-GB1S
(C)=
(D)=
(E)=
(F)=

No.	Lev.	Parts No.	Description	Q'ty (A)	(B)	(C)	(D)	(E)	(F)	I	R
1	1	729408-01560	BLOCK ASSY, CYLINDER	1	1						
5	2	124160-01910	PLUG, PT1/4	2	2						
6	2	124160-01910	PLUG, PT1/4	1	1						
7	2	171051-01921	PLUG, NPTF1	1	1						
8	2	23871-010000	PLUG, R01	1	1						
9	2	27231-500000	PLUG 50	1	1						
10	2	27241-120000	PLUG, 12	2	2						
11	2	27241-300000	PLUG 30	8	8						
12	2	129150-02020	BOLT, METAL CAP	10	10						
15	2	129001-02800	BEARING, MAIN	5	5						
24	2	129150-02930	BEARING, THRUST	2	2						
27	2	129795-02411	BUSH, CAMSHAFT	1	1						
28	2	23871-030000	PLUG, R03	1	1						
29	1	129150-01200	BOLT, HEAD	18	18						
30	1	129408-01330	GASKET, HEAD	1	1						
31	1	129150-02870	BEARING, 0.25 US	5	5						1
34	1	129150-02940	BEARING, THRUST 0.25	2	2						2

Remarks
(1) UNDER-SIZE(U.S=0.25)PART.
(2) OVER-SIZE(O.S=0.25)PART.

N:Old $\xleftrightarrow[\text{No}]{\text{Yes}}$ New. Q:Old $\xleftrightarrow[\text{Yes}]{\text{No}}$ New. R:Old $\xleftrightarrow[\text{Yes}]{\text{Yes}}$ New. S:Old $\xleftrightarrow[\text{No}]{\text{No}}$ New. W:Add. Z:Discontinued. F:Interchangeable by set. K:Q'ty Change

Copyright (C) YANMAR GLOBAL CS CO., LTD. All RightsReserved.

Fig.20. GEAR HOUSING

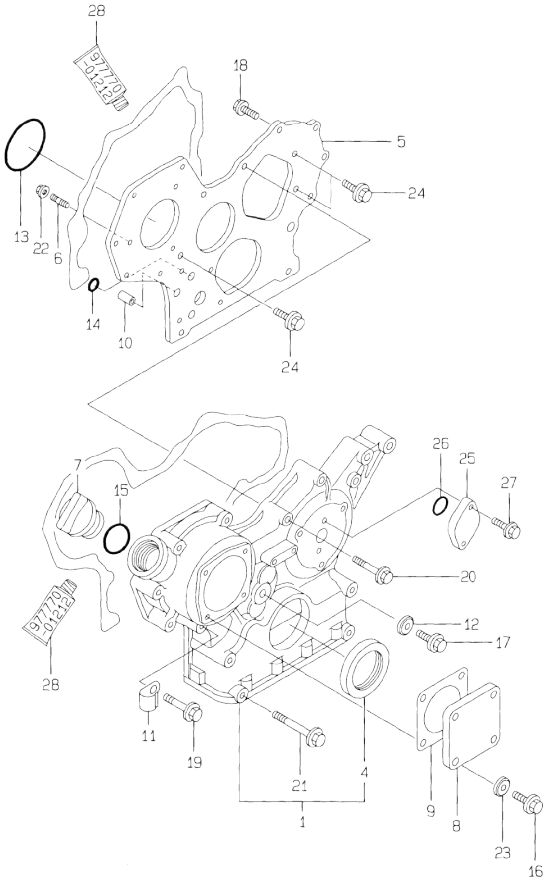

(A)=4TNE84-GB1
(B)=4TNE84-GB1S
(C)=
(D)=
(E)=
(F)=

No.	Lev.	Parts No.	Description	Q'ty (A)	(B)	(C)	(D)	(E)	(F)	I	R
1	1	719810-01500	CASE ASSY, GEAR	1	1						
4	2	129795-01800	SEAL, OIL	1	1						
5	1	129400-01520	FLANGE, GEAR CASE	1	1						
6	1	121450-01560	STUD, M8X22	3	3						
7	1	124160-01751	COVER, FILLER	1	1						
8	1	124240-01871	COVER	1	1						
9	1	124240-01883	GASKET	1	1						
10	1	129795-01950	PIPE, KNOCK L=18	2	2						
11	1	129150-03100	RETAINER, PIPE	1	1						
12	1	22190-080002	WASHER, SEAL 6	1	1						
13	1	121850-51960	O-RING	1	1						
14	1	24311-000160	O-RING, 1AP16.0	2	2						
15	1	24311-000320	O-RING, 1AP32.0	1	1						
16	1	26106-080122	BOLT, M8X 12 PLATED	4	4						
17	1	26106-080162	BOLT, M8X 16 PLATED	1	1						
18	1	26106-080202	BOLT, M8X 20 PLATED	2	2						
19	1	26106-080452	BOLT, M8X 45 PLATED	6	6						
20	1	26106-080552	BOLT, M8X 55 PLATED	3	3						
21	1	26106-080852	BOLT, M8X 85 PLATED	4	4						
22	1	26366-080002	NUT, M8	3	3						
23	1	22190-080002	WASHER, SEAL 6	4	4						
24	1	26106-080162	BOLT, M8X 16 PLATED	3	3						
25	1	121023-01550	COVER	1	1						
26	1	24341-000240	O-RING, 1AS24.0	1	1						
27	1	26106-060122	BOLT, M6X 12 PLATED	2	2						
28	1	977770-01212	GASKET, LIQUID	1	1						1

Remarks
(1) OPTIONAL PART.

N:Old ◄Yes/No► New. Q:Old ◄No/Yes► New. R:Old ◄Yes/Yes► New. S:Old ◄No/No► New. W:Add. Z:Discontinued. F:Interchangeable by set. K:Q'ty Change

Copyright (C) YANMAR GLOBAL CS CO., LTD. All RightsReserved.

Fig.21. FLYWHEEL HOUSING & OIL SUMP

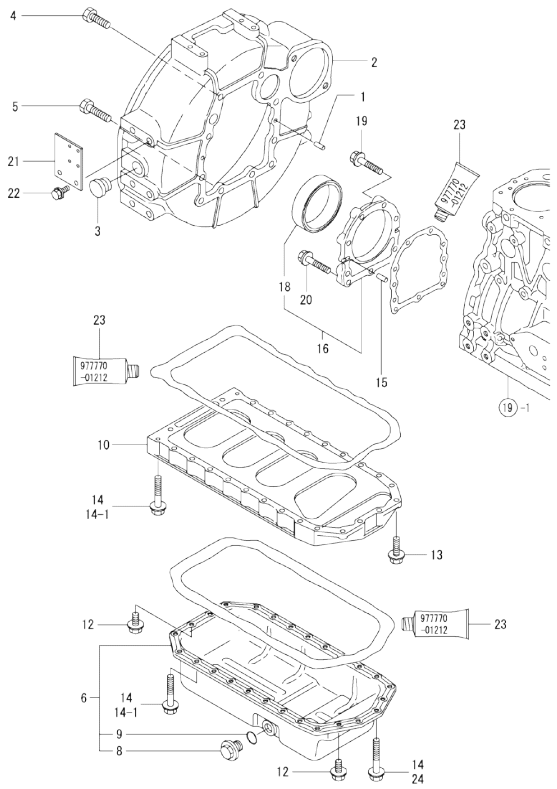

Remarks
(1)Optional parts.
(2)For repair.

(A)=4TNE84-GB1 (D)=
(B)=4TNE84-GB1S (E)=
(C)= (F)=

No.	Lev.	Parts No.	Description	Q'ty (A)	(B)	(C)	(D)	(E)	(F)	I	R
1	1	129100-01580	PIN, M8X16	2	2						
2	1	171420-01600	HOUSING, FLYWHEEL	1	1						
3	1	119620-01750	CAP	1	1						
4	1	26206-100252	BOLT, M10X 25 PLATED	6	6						
5	1	26206-100302	BOLT, M10X 30 PLATED	4	4						
6	1	129400-01770	SUMP ASSY, OIL	1	1						
6-1	1	129688-01780	OIL PAN ASSY, DEEP	1	1					N	2
	(A=EC2590)	(B=REF. TO R)									
8	2	171301-01640	PLUG, 22	1	1						
9	2	24341-000250	O-RING, 1AS25.0	1	1						
10	1	129400-01730	SPACER, OIL SUMP	1	1						
12	1	26106-080162	BOLT, M8X 16 PLATED	4	4						
13	1	26106-080252	BOLT, M8X 25 PLATED	2	2						
14	1	26106-080452	BOLT, M8X 45 PLATED	24	24						
14-1	1	26106-080452	BOLT, M8X 45 PLATED	20	20					K	
	(A=FROM 1ST)	(B=FROM 1ST)									
15	1	129100-01580	PIN, M8X16	2	2						
16	1	129100-01640	CASE ASSY, OIL SEAL	1	1						
18	2	129795-01780	SEAL, OIL	1	1						
19	1	129486-01670	BOLT, M8X30	6	6						
20	1	26106-080352	BOLT, M8X 35 PLATED	3	3						
21	1	129111-67010	SUPPORT, WIRE	1	1						
22	1	26106-080162	BOLT, M8X 16 PLATED	2	2						
23	1	977770-01212	GASKET, LIQUID	1	1						1
24	1	26106-080502	BOLT, M8X 50 PLATED	4	4					W	
	(A=FROM 1ST)	(B=FROM 1ST)									

N:Old ←Yes/No→ New. Q:Old ←No/Yes→ New, R:Old ←Yes/Yes→ New. S:Old ←No/No→ New. W:Add. Z:Discontinued. F:Interchangeable by set. K:Q'ty Change

Copyright (C) YANMAR GLOBAL CS CO., LTD. All RightsReserved.

Fig.22. CYLINDER HEAD & BONNET

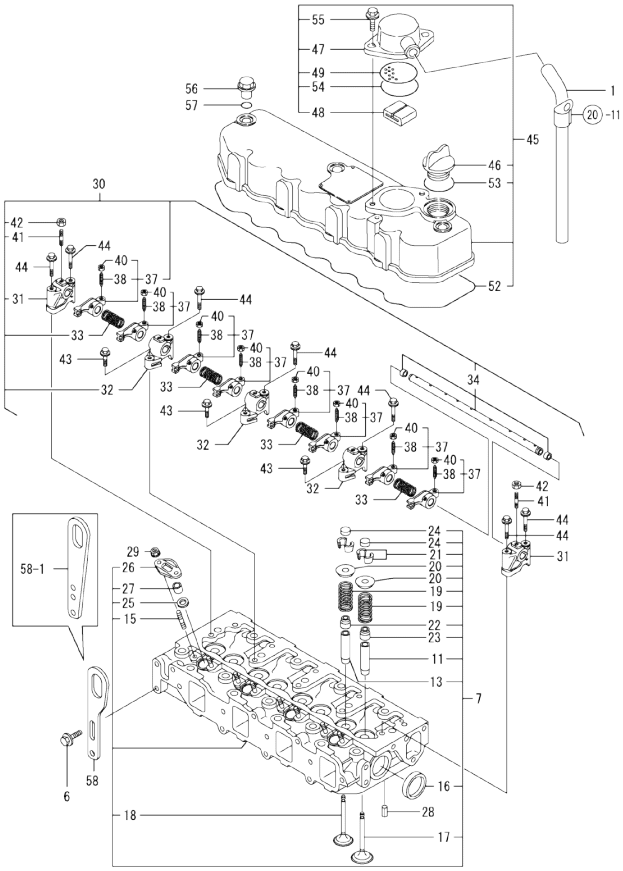

(A)=4TNE84-GB1
(B)=4TNE84-GB1S
(C)=
(D)=
(E)=
(F)=

No.	Lev.	Parts No.	Description	Q'ty (A)	(B)	(C)	(D)	(E)	(F)	I	R
1	1	171350-03090	PIPE , BREATHER 900	1	1						
6	1	26106-080142	BOLT, M8X 14 PLATED	4	4						
7	1	129407-11700	HEAD ASSY, CYLINDER	1	1						
11	2	120130-11860	GUIDE, VALVE	4	4						1
13	2	129150-11810	GUIDE, VALVE	4	4						1
15	2	26216-060202	STUD, M6X 20	8	8						
16	2	27241-400000	PLUG, 40	2	2						
17	2	129100-11100	VALVE, INTAKE	4	4						
18	2	129100-11110	VALVE, EXHAUST	4	4						
19	2	129795-11120	SPRING, VALVE	8	8						
20	2	129795-11180	RETAINER, SPRING	8	8						
21	2	27310-080001	COTTER, 8	8	8						
22	2	121400-11340	SEAL, VALVE STEM	4	4						
23	2	124460-11340	SEAL, VALVE STEM	4	4						
24	2	129150-11370	CAP, VALVE	8	8						
25	2	119625-11880	SEAT, NOZZLE	4	4						
26	2	119625-11900	RETAINER, NOZZLE	4	4						
27	2	119625-11871	PROTECTOR, NOZZLE	4	4						
28	1	22351-060012	PIN, SPRING 6.0X12	2	2						
29	1	26366-060002	NUT, M6	8	8						
30	1	129500-11240	SHAFT ASSY, ROCKER	1	1						
31	2	129155-11260	SUPPORT, ROCKER ARM	2	2						
32	2	129155-11270	SUPPORT, ROCKER ARM	3	3						
33	2	129150-11280	SPRING	4	4						
34	2	129550-11290	SHAFT, ROCKER ARM	1	1						
37	2	129100-11650	ARM, ROCKER	8	8						
38	3	129150-11230	SCREW, VALVE ADJUST	8	8						
40	3	129150-11750	NUT, M8	8	8						
41	2	26226-080182	STUD, M8X 18	3	3						
42	2	26756-080002	NUT, LOCK M8	3	3						
43	1	26106-080252	BOLT, M8X 25 PLATED	3	3						
44	1	26106-080502	BOLT, M8X 50 PLATED	7	7						
45	1	129400-11350	BONNET ASSY, HEAD	1	1						
46	2	124160-01751	COVER, FILLER	1	1						
47	2	129150-03020	COVER, BREATHER	1	1						
48	2	129150-03070	BAFFLE, BREATHER	1	1						
49	2	129150-03080	PLATE, BAFFLE	1	1						
52	2	129550-11310	GASKET, BONNET	1	1						
53	2	24311-000320	O-RING, 1AP32.0	1	1						
54	2	24341-000500	O-RING, 1AS50.0	1	1						
55	2	26106-080162	BOLT, M8X 16 PLATED	2	2						
56	1	124160-11360	KNOB	3	3						
57	1	24311-000120	O-RING, 1AP12.0	3	3						
58	1	124736-07900	LIFTER	2	2						
58-1	1	129900-07900	LIFTER	2	2						N

(A=*2009.08) (B=*2009.08)

Remarks
(1) REPAIR PART.

N:Old $\frac{\text{Yes}}{\text{No}}$ New. Q:Old $\frac{\text{No}}{\text{Yes}}$ New. R:Old $\frac{\text{Yes}}{\text{Yes}}$ New. S:Old $\frac{\text{No}}{\text{No}}$ New. W:Add. Z:Discontinued. F:Interchangeable by set. K:Q'ty Change

Copyright (C) YANMAR GLOBAL CS CO., LTD. All RightsReserved.

Fig.23. SUCTION MANIFOLD & AIR CLEANER

(A)=4TNE84-GB1
(B)=4TNE84-GB1S
(C)=
(D)=
(E)=
(F)=

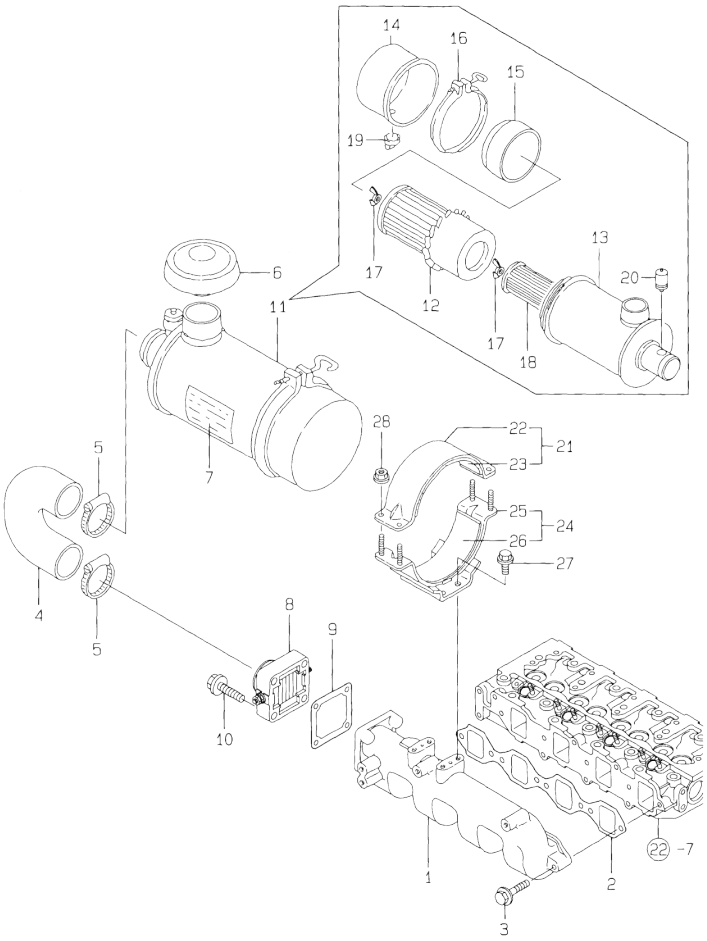

No.	Lev.	Parts No.	Description	Q'ty (A)	(B)	(C)	(D)	(E)	(F)	I	R
1	1	129488-12100	MANIFOLD, AIR INTAKE	1	1						
2	1	129550-12111	GASKET, MANIFOLD	1	1						
3	1	26106-080352	BOLT, M8X 35 PLATED	5	5						
4	1	171351-12210	PIPE, AIR INTAKE	1	1						
5	1	23000-060000	CLAMP, 60	2	1						
6	1	121521-12400	CAP, RAIN	1							
7	1	171064-12600	LABEL, AIR CLEANER	1	1						
8	1	129120-77501	HEATER	1	1						
9	1	129150-77511	GASKET	1	1						
10	1	26106-080352	BOLT, M8X 35 PLATED	4	4						
11	1	121521-12500	CLEANER ASSY, AIR	1	1						
12	2	121420-12511	ELEMENT	1	1						
13	2	171061-12520	BODY ASSY	1	1						
14	2	121422-12530	CUP	1	1						
15	2	121420-12540	SCARF, BAFFLE	1	1						
16	2	121420-12550	CLAMP ASSY	1	1						
17	2	121420-12561	NUT, WING	2	2						
18	2	121422-12570	ELEMENT	1	1						
19	2	121422-12580	VALVE, UNLOADER	1	1						
20	2	126650-12680	INDICATOR	1	1						
21	1	121400-12540	BAND ASSY, CLEANER	1	1						
22	2	121400-12560	BAND, AIR CLEANER	1	1						
23	2	121400-12570	SEAT, RUBBER B	1	1						
24	1	171351-12580	SUPPORT ASSY,CLEANER	1	1						
25	2	171351-12560	SUPPORT, AIR CLEANER	1	1						
26	2	171351-12570	SEAT, RUBBER	1	1						
27	1	26106-080142	BOLT, M8X 14 PLATED	4	4						
28	1	26366-060002	NUT, M6	4	4						

N:Old ←Yes/No→ New. Q:Old ←No/Yes→ New. R:Old ←Yes/Yes→ New. S:Old ←No/No→ New. W:Add. Z:Discontinued. F:Interchangeable by set. K:Q'ty Change

Copyright (C) YANMAR GLOBAL CS CO., LTD. All RightsReserved.

Fig.24. EXHAUST MANIFOLD & SILENCER

(A)=4TNE84-GB1
(B)=4TNE84-GB1S
(C)=
(D)=
(E)=
(F)=

No.	Lev.	Parts No.	Description	Q'ty (A)	(B)	(C)	(D)	(E)	(F)	I	R
1	1	129407-13100	MANIFOLD, EXHAUST	1	1						
2	1	129407-13110	GASKET	1	1						
3	1	194990-22050	NUT, M8	2	2						
4	1	26106-080402	BOLT, M8X 40 PLATED	6	6						
5	1	119131-18320	STUD, M8X22	4	4						
6	1	26216-080402	STUD, M8X 40	2	2						
7	1	129400-13201	GASKET, SILENCER	1							
8	1	129411-13500	SILENCER	1							
9	1	129411-13600	COVER, SILENCER	1							
10	1	129411-13650	STAY, SILENCER	1							
11	1	129411-13670	BAND, SILENCER	1							
12	1	129411-13680	BAND, SILENCER	1							
13	1	194990-22050	NUT, M8	4							
14	1	26014-080302	BOLT, M8X 30	2							
15	1	26106-080122	BOLT, M8X 12 PLATED	8							
16	1	26106-080142	BOLT, M8X 14 PLATED	2							
17	1	129400-13201	GASKET, SILENCER		1						

N:Old ◄Yes/No► New. Q:Old ◄No/Yes► New. R:Old ◄Yes/Yes► New. S:Old ◄No/No► New. W:Add. Z:Discontinued. F:Interchangeable by set. K:Q'ty Change

Copyright (C) YANMAR GLOBAL CS CO., LTD. All RightsReserved.

Fig.25. CAMSHAFT & DRIVING GEAR

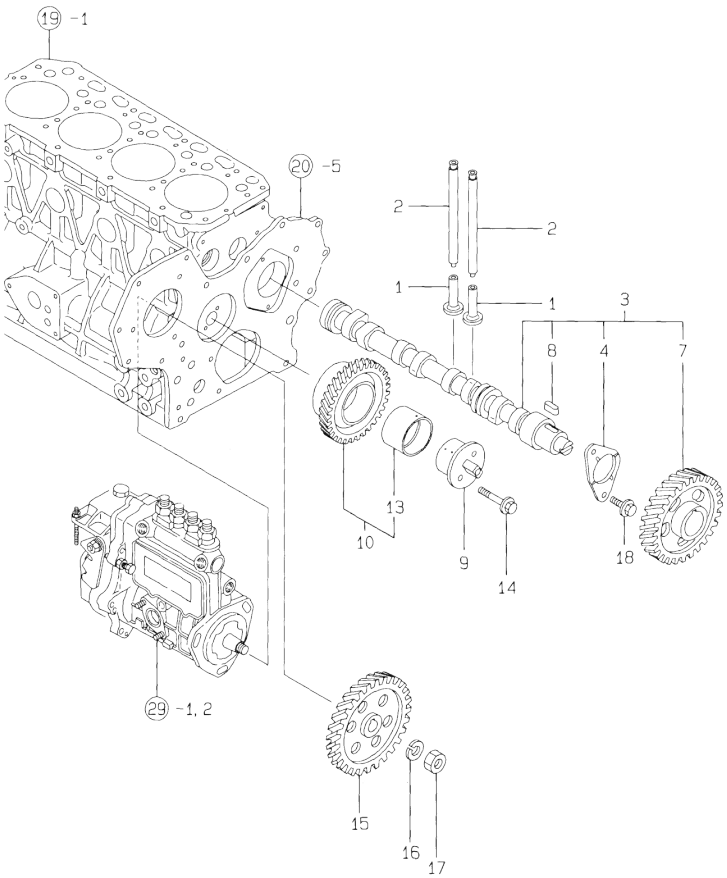

(A)=4TNE84-GB1
(B)=4TNE84-GB1S
(C)=
(D)=
(E)=
(F)=

No.	Lev.	Parts No.	Description	Q'ty (A)	(B)	(C)	(D)	(E)	(F)	I	R
1	1	129150-14200	TAPPET	8	8						
2	1	129150-14400	ROD, PUSH L=178	8	8						
3	1	729402-14580	CAMSHAFT ASSY	1	1						
4	2	129150-02450	BEARING, THRUST	1	1						
7	2	129150-14101	GEAR, CAMSHAFT	1	1						
8	2	22512-070140	KEY, 7X 14	1	1						
9	1	129100-25061	SHAFT, IDLE	1	1						
10	1	129150-25101	GEAR ASSY, IDLE	1	1						
13	2	129150-25920	BUSH, IDLE GEAR	1	1						1
14	1	26106-080452	BOLT, M8X 45 PLATED	2	2						
15	1	129150-25900	GEAR, PUMP	1	1						
16	1	22217-120000	WASHER, SPRING 12	1	1						
17	1	26716-120002	NUT, M12	1	1						
18	1	26106-080162	BOLT, M8X 16 PLATED	2	2						

Remarks
(1) REPAIR PART.

N:Old ←Yes/No→ New. Q:Old ←No/Yes→ New. R:Old ←Yes/Yes→ New. S:Old ←No/No→ New. W:Add. Z:Discontinued. F:Interchangeable by set. K:Q'ty Change

Copyright (C) YANMAR GLOBAL CS CO., LTD. All RightsReserved.

Fig.26. CRANKSHAFT & PISTON

(A)=4TNE84-GB1
(B)=4TNE84-GB1S
(C)=
(D)=
(E)=
(F)=

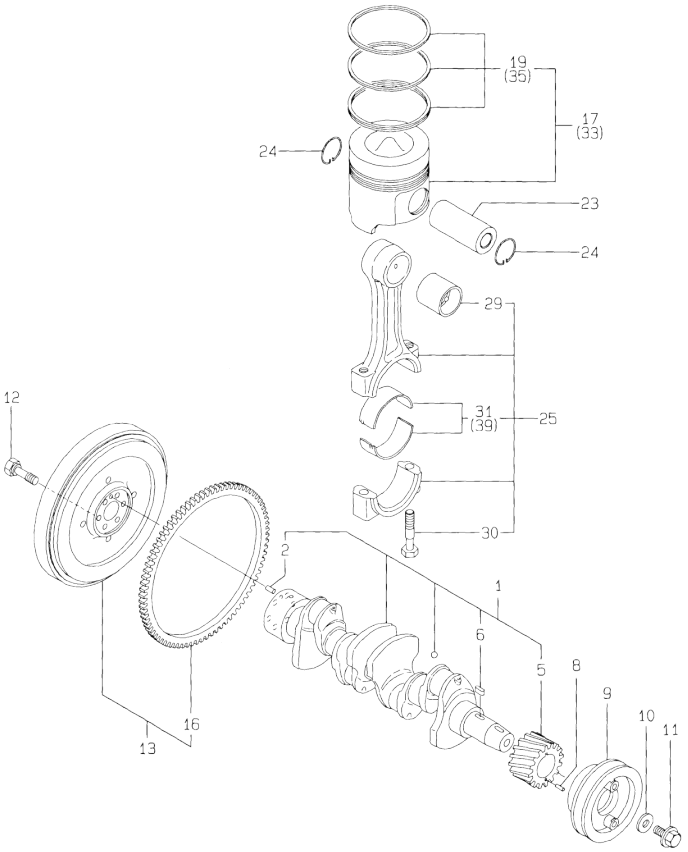

No.	Lev.	Parts No.	Description	Q'ty (A)	(B)	(C)	(D)	(E)	(F)	I	R
1	1	129407-21000	CRANKSHAFT ASSY	1	1						
2	2	129100-01580	PIN, M8X16	1	1						
5	2	129150-21200	GEAR, CRANKSHAFT	1	1						
6	2	22512-070140	KEY, 7X 14	1	1						
8	1	22351-040010	PIN, SPRING 4.0X10	1	1						
9	1	129550-21650	V-PULLEY	1	1						
10	1	129795-21661	WASHER	1	1						
11	1	121850-21680	BOLT	1	1						
12	1	121111-21501	BOLT, FLYWHEEL	6	6						
13	1	171420-21590	FLYWHEEL ASSY	1	1						
16	2	124550-21600	GEAR, RING	1	1						
17	1	129002-22081	PISTON ASSY	4	4						
19	2	129002-22500	RING SET, PISTON	4	4						
23	1	129202-22300	PIN, PISTON D26 L70	4	4						
24	1	22252-000260	RING, 26	8	8						
25	1	729402-23100	ROD ASSY, CONNECTING	4	4						
29	2	129100-23910	BEARING, PISTON PIN	4	4						1
30	2	121550-23200	BOLT, CONNECTING ROD	8	8						
31	2	129150-23600	BEARING, CRANK PIN	4	4						
33	1	129002-22901	PISTON ASSY, 0.25 OS	4	4						2
35	2	129002-22950	RING SET, 0.25 OS	4	4						2
39	1	129150-23610	BEARING, 0.25 US	4	4						3

Remarks
(1) REPAIR PART.
(2) OVER-SIZE(O.S=0.25)PART.
(3) UNDER-SIZE(U.S=0.25)PART.

N:Old ←Yes/No→ New. Q:Old ←No/Yes→ New, R:Old ←Yes/Yes→ New. S:Old ←No/No→ New. W:Add. Z:Discontinued. F:Interchangeable by set. K:Q'ty Change

Copyright (C) YANMAR GLOBAL CS CO., LTD. All RightsReserved.

Fig.27. LUB. OIL SYSTEM

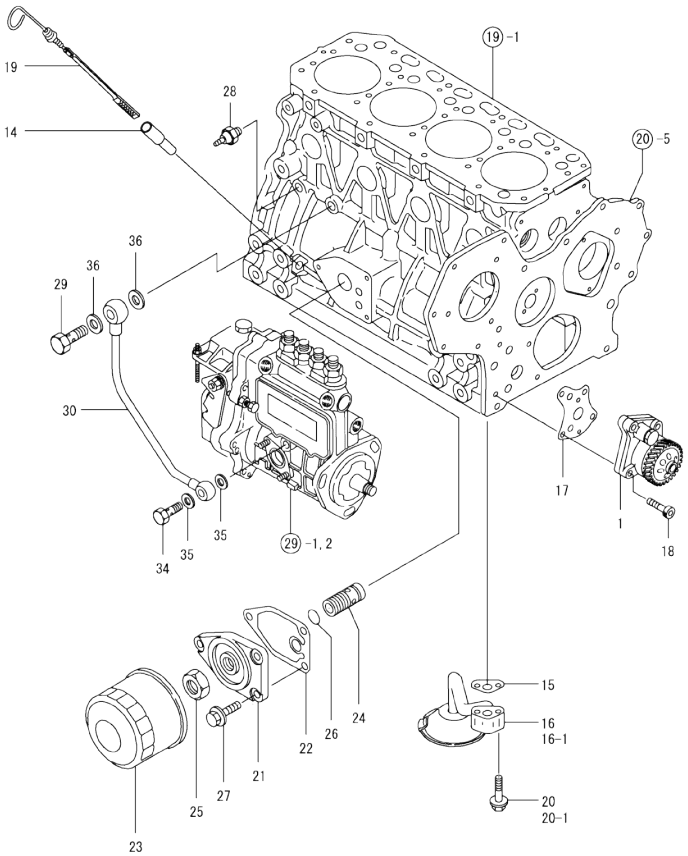

(A)=4TNE84-GB1
(B)=4TNE84-GB1S
(C)=
(D)=
(E)=
(F)=

No.	Lev.	Parts No.	Description	Q'ty (A)	(B)	(C)	(D)	(E)	(F)	I	R
1	1	129407-32000	PUMP ASSY, OIL	1	1						
14	1	121520-34810	GUIDE, DIPSTICK	1	1						
15	1	129150-35041	GASKET	1	1						
15-1	1	129150-35042	GASKET	1	1					N	
	(A=EZZZZZ)	(B=EZZZZZ)									
16	1	129436-35091	PIPE ASSY, OIL INLET	1	1						
16-1	1	129436-35070	PIPE ASSY	1	1					S	
	(A=EZZZZZ)	(B=EZZZZZ)									
17	1	129150-32020	GASKET, PUMP	1	1						
18	1	26450-060252	BOLT, M6X 25	4	4						
19	1	171420-34820	DIPSTICK, OIL	1	1						
20	1	26106-080352	BOLT, M8X 35 PLATED	2	2						
20-1	1	26106-080552	BOLT, M8X 55 PLATED	2	2					S	
	(A=EZZZZZ)	(B=EZZZZZ)									
21	1	129150-35101	BRACKET, STRAINER	1	1						
22	1	129150-35111	GASKET	1	1						
23	1	129150-35151	FILTER, D80XL80	1	1						
24	1	129001-35300	BOLT, FILTER	1	1						
25	1	129150-35350	NUT	1	1						
26	1	24311-000160	O-RING, 1AP16.0	1	1						
27	1	26106-080202	BOLT, M8X 20 PLATED	3	3						
28	1	124160-39450	SWITCH, 0.5KG	1	1						
29	1	124160-39140	BOLT, PIPE JOINT M10	1	1						
30	1	129550-39450	PIPE ASSY, OIL	1	1						
34	1	124550-59820	BOLT, PIPE JOINT M8	1	1						
35	1	22190-080002	WASHER, SEAL 6	2	2						
36	1	23414-100000	GASKET, 10X1.0	2	2						

N:Old ◄Yes/No► New. Q:Old ◄No/Yes► New. R:Old ◄Yes/Yes► New. S:Old ◄No/No► New. W:Add. Z:Discontinued. F:Interchangeable by set. K:Q'ty Change

Copyright (C) YANMAR GLOBAL CS CO., LTD. All RightsReserved.

Fig.28. COOLING WATER SYSTEM

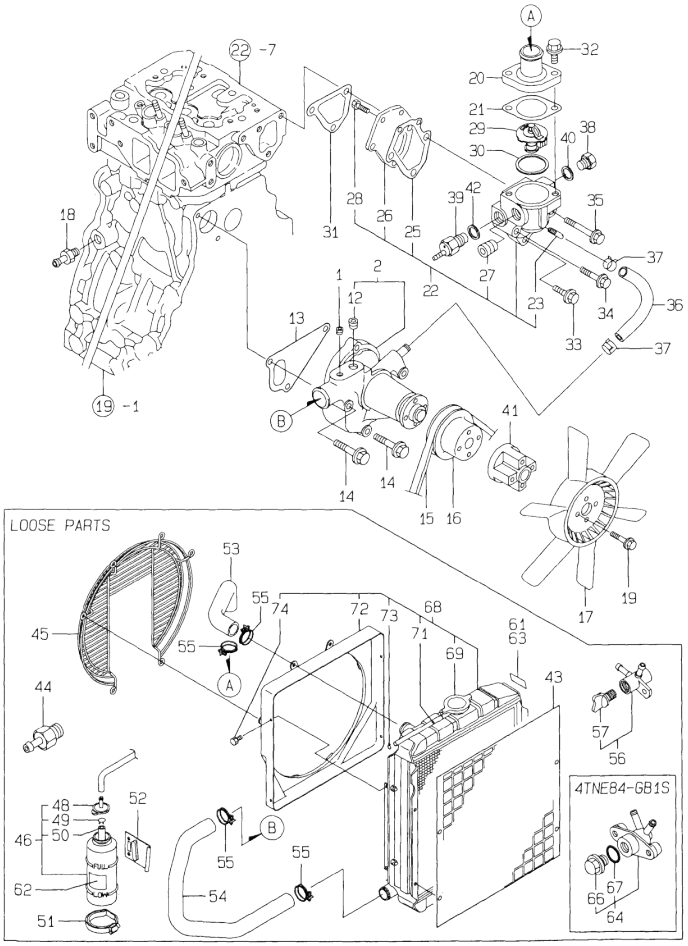

(A)=4TNE84-GB1
(B)=4TNE84-GB1S
(C)=
(D)=
(E)=
(F)=

No.	Lev.	Parts No.	Description	Q'ty (A)	(B)	(C)	(D)	(E)	(F)	I	R
1	1	121850-11860	PLUG, PT1/4	1	1						
2	1	129100-42003	PUMP ASSY, WATER	1	1						
12	2	23871-030000	PLUG, R03	1	1						
13	1	129100-42020	GASKET, WATER PUMP	1	1						
14	1	26106-080602	BOLT, M8X 60 PLATED	3	3						
15	1	25132-003700	V-BELT, A37	1	1						
16	1	129155-42350	V-PULLEY	1	1						
17	1	129403-44740	FAN, COOLING 370	1	1						
18	1	121550-49111	JOINT, PT1/4	1	1						
19	1	26106-060352	BOLT, M6X 35 PLATED	4	4						
20	1	129350-49530	COVER, THERMOSTAT	1	1						
21	1	129795-49551	GASKET	1	1						
22	1	129100-49800	CASE ASSY,THERMOSTAT	1	1						
23	2	124770-11770	JOINT, PIPE PT1/8	1	1						
25	2	129100-49820	GASKET	1	1						
26	2	129100-49830	COVER, THERMOSTAT	1	1						
27	2	23871-030000	PLUG, R03	1	1						
28	2	26116-060162	BOLT, M6X 16 PLATED	2	2						
29	1	129155-49800	THERMOSTAT, 71	1	1						
30	1	129150-49811	GASKET, THERMOSTAT	1	1						
31	1	129100-49840	GASKET	1	1						
32	1	26106-080202	BOLT, M8X 20 PLATED	2	2						
33	1	26106-080252	BOLT, M8X 25 PLATED	1	1						
34	1	26106-080502	BOLT, M8X 50 PLATED	1	1						
35	1	26106-080602	BOLT, M8X 60 PLATED	1	1						
36	1	129132-49050	PIPE, WATER	1	1						
37	1	23000-016000	CLAMP, 16	2	2						
38	1	121450-42450	PLUG, M16	1	1						
39	1	121250-44901	SWITCH, 110	1	1						
40	1	124465-44950	GASKET, 16	1	1						
41	1	171353-44760	SPACER, FAN	1	1						
42	1	124465-44950	GASKET, 16	1	1						
43	1	129411-44590	PROTECTOR	1							
44	1	129137-49100	JOINT	1	1						
45	1	129420-44560	PROTECTOR, FAN	1	1						
46	1	124450-44510	TANK ASSY, SUB	1	1						
48	2	124450-44530	CAP	1	1						
49	2	124450-44560	RETAINER	1	1						
50	2	23061-070230	PIPE, 7X 230	1	1						
51	1	124450-44550	BAND	1	1						
52	1	121256-44600	BRACKET, SUB TANK	1	1						
53	1	171420-49010	PIPE, WATER	1	1						
54	1	171420-49020	PIPE, WATER	1	1						
55	1	23010-038000	CLAMP, 38	4	4						
56	1	129150-49100	COCK ASSY, 3-WAY	1							
57	2	129150-49080	COCK, DRAIN	1							
61	1	124764-44800	LABEL, RADIATOR	1	1						
62	1	124764-44810	LABEL, SUB TANK	1	1						
63	1	121400-44910	LABEL, RADIATOR	1	1						
64	1	121450-49110	COCK ASSY, 3-WAY		1						
66	2	121250-49121	PLUG, DRAIN		1						

N:Old ←Yes/No→ New. Q:Old ←No/Yes→ New. R:Old ←Yes/Yes→ New. S:Old ←No/No→ New. W:Add. Z:Discontinued. F:Interchangeable by set. K:Q'ty Change

++ CONTINUE ++

Copyright (C) YANMAR GLOBAL CS CO., LTD. All RightsReserved.

Fig.28. COOLING WATER SYSTEM

(A)=4TNE84-GB1
(B)=4TNE84-GB1S
(C)=
(D)=
(E)=
(F)=

No.	Lev.	Parts No.	Description	Q'ty (A)	(B)	(C)	(D)	(E)	(F)	I	R
67	2	24311-000160	O-RING, 1AP16.0		1						
68	1	129420-44500	RADIATOR	1	1						
69	2	119259-44570	CAP, RADIATOR	1	1						
71	2	129132-44530	HOSE, RUBBER	1	1						
72	2	129420-44550	SHROUD ASSY	1	1						
73	2	121250-44590	CLAMP	2	2						
74	2	26014-060122	BOLT, M6X 12	4	4						

N:Old ←Yes/No→ New. Q:Old ←No/Yes→ New. R:Old ←Yes/Yes→ New. S:Old ←No/No→ New. W:Add. Z:Discontinued. F:Interchangeable by set. K:Q'ty Change

Copyright (C) YANMAR GLOBAL CS CO., LTD. All RightsReserved.

Fig.29. FUEL INJECTION PUMP

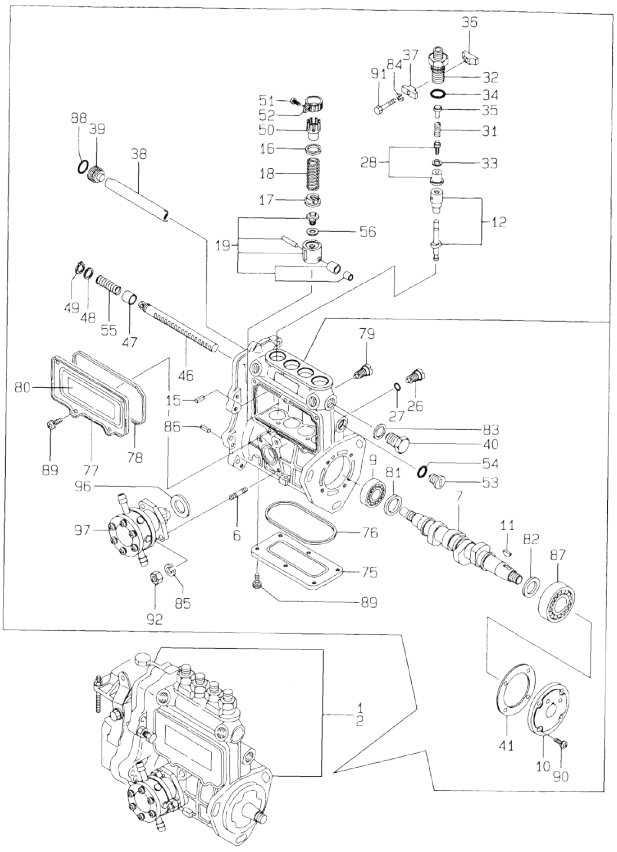

Remarks
(1)GOVERNOR ASSY(FIG.30)IS
INCORPORATED IN THIS FUEL
INJECTION PUMP ASSY(REF.NO.1,2).

(A)=4TNE84-GB1
(B)=4TNE84-GB1S
(C)=
(D)=
(E)=
(F)=

No.	Lev.	Parts No.	Description	Q'ty (A)	(B)	(C)	(D)	(E)	(F)	I	R
1	1	729408-51310	PUMP ASSY, INJECTION	1							1
2	1	729618-51310	PUMP ASSY, INJECTION		1						1
6	2	129155-51020	STUD	2	2						
7	2	129470-51040	CAMSHAFT	1	1						
9	2	129155-51050	BEARING, 17BM001D	1	1						
10	2	129155-51060	SUPPORT, CAMSHAFT	1	1						
11	2	122710-51090	KEY	1	1						
12	2	129506-51100	PLUNGER ASSY	4	4						
15	2	129155-51140	PIN	4	4						
16	2	174307-51170	RETAINER, SPRING A	4	4						
17	2	129155-51180	RETAINER, SPRING	4	4						
18	2	124950-51190	SPRING, PLUNGER	4	4						
19	2	129155-51200	TAPPET ASSY	4	4						
26	2	129155-51270	STOPPER, TAPPET	4	4						
27	2	129155-51280	O-RING, S6	4	4						
28	2	129100-51300	VALVE ASSY, DELIVERY	4	4						
31	2	129155-51320	SPRING, DELIVERY	4	4						
32	2	129155-51340	RETAINER	4	4						
33	2	124550-51350	GASKET, DELIVERY	4	4						
34	2	124550-51370	O-RING	4	4						
35	2	129155-51370	STOPPER, VALVE	4	4						
36	2	129155-51380	STOPPER	2	2						
37	2	129155-51390	STOPPER	2	2						
38	2	129555-51400	DEFLECTOR	1	1						
39	2	129155-51410	BOLT	1	1						
40	2	129155-51420	PLUG, M16	1	1						
41	2	129155-51450	SHIM SET, ADJUSTING	1	1						
46	2	129555-51500	RACK, CONTROL	1	1						
47	2	129155-51521	BUSH, RACK	1	1						
48	2	129155-51530	SPACER	1	1						
49	2	129155-51540	CIRCLIP	1	1						
50	2	129155-51550	PINION, CONTROL	4	4						
51	2	122117-51560	SCREW	4	4						
52	2	174307-51560	PINION	4	4						
53	2	129155-51570	PLUG, M12	1	1						
54	2	129155-51580	O-RING	1	1						
55	2	129155-51591	SPRING, RACK	1	1						
56	2	129155-51600	SHIM SET, ADJUSTING	4	4						
75	2	129555-51700	COVER	1	1						
76	2	129555-51710	GASKET	1	1						
77	2	129555-51750	COVER	1	1						
78	2	129555-51760	GASKET	1	1						
79	2	129155-51790	STOOPER, RACK	1	1						
80	2	129156-51910	LABEL, CAUTION	1	1						
81	2	129155-51930	SPACER, T=3.25	1	1						
82	2	129155-51940	SPACER, T=1.5	1	1						
83	2	22190-160002	WASHER, SEAL 16	1	1						
84	2	22217-050000	WASHER, SPRING 5	2	2						
85	2	22217-060000	WASHER, SPRING 6	2	2						
86	2	22351-050010	PIN, SPRING 5.0X10	2	2						
87	2	24101-063034	BEARING, BALL 6303	1	1						

N:Old ←Yes/No→ New. Q:Old ←No/Yes→ New. R:Old ←Yes/Yes→ New. S:Old ←No/No→ New. W:Add. Z:Discontinued. F:Interchangeable by set. K:Q'ty Change

++ CONTINUE ++

Copyright (C) YANMAR GLOBAL CS CO., LTD. All RightsReserved.

Fig.29. FUEL INJECTION PUMP

(A)=4TNE84-GB1
(B)=4TNE84-GB1S
(C)=
(D)=
(E)=
(F)=

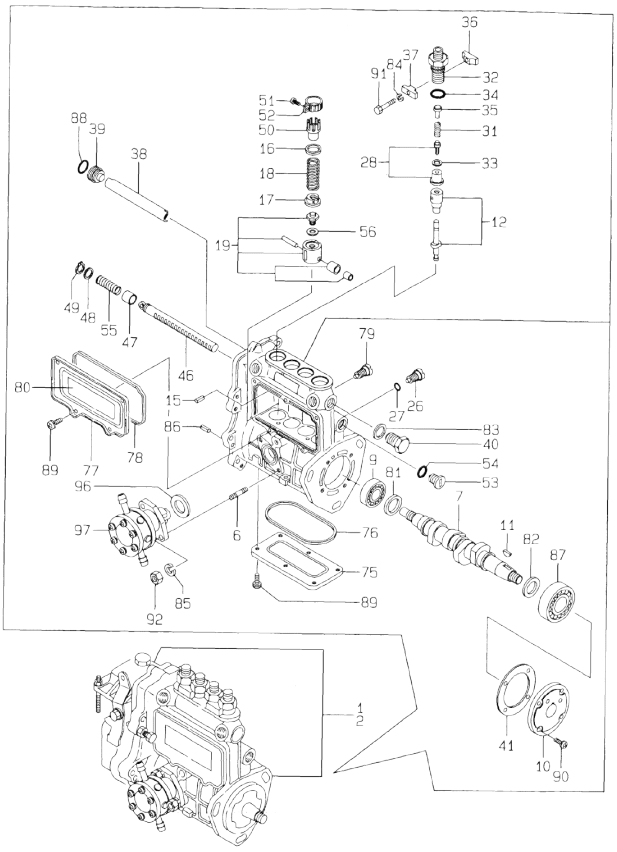

No.	Lev.	Parts No.	Description	Q'ty (A)	(B)	(C)	(D)	(E)	(F)	I	R
88	2	24341-000160	O-RING, 1AS16.0	1	1						
89	2	26022-050102	SCREW, M5X10	11	11						
90	2	26022-060162	SCREW, M6X16	4	4						
91	2	26116-050302	BOLT, M5X 30 PLATED	2	2						
92	2	26716-060002	NUT, M6	2	2						
96	2	129155-52050	GASKET	1	1						
97	2	129100-52100	PUMP ASSY, FUEL FEED	1	1						

Remarks
(1)GOVERNOR ASSY(FIG.30)IS
INCORPORATED IN THIS FUEL
INJECTION PUMP ASSY(REF.NO.1,2).

N:Old ←Yes/No→ New. Q:Old ←No/Yes→ New. R:Old ←Yes/Yes→ New. S:Old ←No/No→ New. W:Add. Z:Discontinued. F:Interchangeable by set. K:Q'ty Change

Copyright (C) YANMAR GLOBAL CS CO., LTD. All RightsReserved.

Fig.30. GOVERNOR

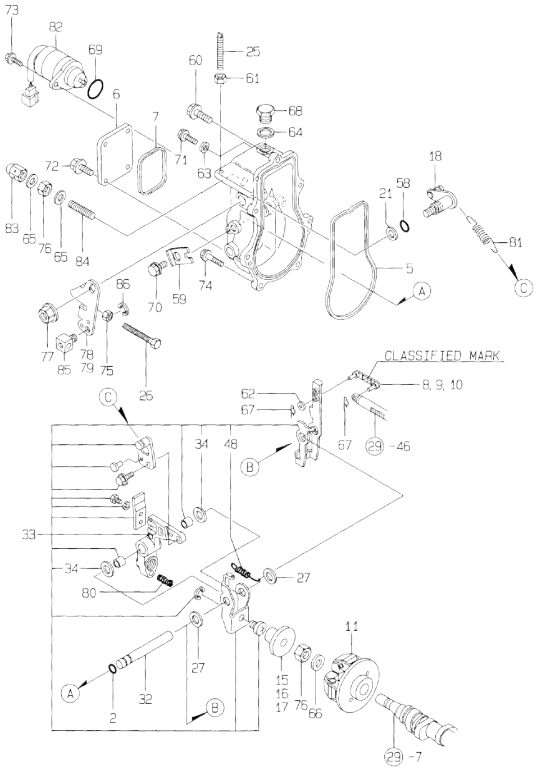

(A)=4TNE84-GB1
(B)=4TNE84-GB1S
(C)=
(D)=
(E)=
(F)=

No.	Lev.	Parts No.	Description	Q'ty (A)	(B)	(C)	(D)	(E)	(F)	I	R
2	2	129155-51280	O-RING, S6	1	1						
5	2	129052-61050	GASKET	1	1						
6	2	129052-61060	COVER, GOVERNOR CASE	1	1						
7	2	129052-61070	GASKET	1	1						
8	2	129155-61120	LINK, L=30 MARK 0	1	1						1
9	2	129155-61130	LINK, L=31 MARK 1	1	1						1
10	2	129155-61140	LINK, L=30.5 MARK 05	1	1						1
11	2	171488-61200	WEIGHT ASSY,GOVERNOR	1	1						
15	2	129155-61341	SLEEVE	1	1						2
16	2	129155-61350	SLEEVE, L=24.9	1	1						2
17	2	129155-61360	SLEEVE, L=25.2	1	1						2
18	2	129100-61400	SHAFT ASSY	1	1						
21	2	129155-61430	SPACER	1	1						
25	2	129155-61450	BOLT, LIMITER	1	1						
26	2	129155-61460	BOLT, IDLE	1	1						
27	2	129155-61480	SPACER ASSY	2	2						
32	2	129052-61390	SHAFT	1	1						
33	2	129412-61500	LEVER ASSY, GOVERNOR	1	1						
34	3	174307-51700	SHIM SET	2	2						
48	3	119843-61540	SPRING, SET	1	1						
58	2	129155-61830	O-RING, S10	1	1						
59	2	119660-61901	RETAINER, SHAFT	1	1						
60	2	129155-61950	BOLT	1	1						
61	2	124550-66370	NUT, M6	1	1						
62	2	22117-040000	WASHER, 4	1	1						
63	2	22190-060002	WASHER, SEAL 6	1	1						
64	2	22190-100002	WASHER, SEAL 10	1	1						
65	2	22190-120002	WASHER, SEAL 12	2	2						
66	2	22287-120000	WASHER, 12	1	1						
67	2	22372-040000	PIN, SNAP 4	2	2						
68	2	23887-100002	PLUG, 10	1	1						
69	2	24341-000280	O-RING, 1AS28.0	1	1						
69-1	2	158552-61900	O-RING	1	1						N
	(A=EXXXXX)	(B=EXXXXX)									
70	2	26106-060102	BOLT, M6X 10 PLATED	1	1						
71	2	26106-060102	BOLT, M6X 10 PLATED	1	1						
72	2	26106-060102	BOLT, M6X 10 PLATED	4	4						
73	2	26106-060142	BOLT, M6X 14 PLATED	2	2						
74	2	26106-060202	BOLT, M6X 20 PLATED	6	6						
75	2	26756-060002	NUT, LOCK M6	1	1						
76	2	26776-120002	NUT, LOCK M12	2	2						
77	1	26366-080002	NUT, M8	1	1						
78	1	129100-61440	LEVER, CONTROL		1						
79	1	171488-61440	LEVER, CONTROL	1							
80	1	129500-61650	SPRING, FUEL CONTROL	1	1						
81	1	129477-61720	SPRING, GOVERNOR	1	1						
82	1	119653-77950	SOLENOID, STOP	1	1						
83	1	26687-120002	NUT, CAP M12	1	1						
84	1	129155-61470	BOLT, CONTROL	1	1						
85	1	124756-67510	RETAINER	1	1						
86	1	22272-000070	RING, E- 7	1	1						

N:Old ←Yes/No→ New. Q:Old ←No/Yes→ New. R:Old ←Yes/Yes→ New. S:Old ←No/No→ New. W:Add. Z:Discontinued. F:Interchangeable by set. K:Q'ty Change

Remarks
(1) SELECTIVE PARTS: CERTAIN THE CLASSIFICATION MARK, THEN PLACE YOUR ORDER.(REFER TO ILLUSTRATION).
(2) SELECTIVE PARTS.
* THIS FIGURE(GOVERNOR ASSY) IS INCORPORATED IN THE FUEL INJECTION PUMP ASSY(FIG.29).

Copyright (C) YANMAR GLOBAL CS CO., LTD. All RightsReserved.

Fig.31. FUEL INJECTION VALVE

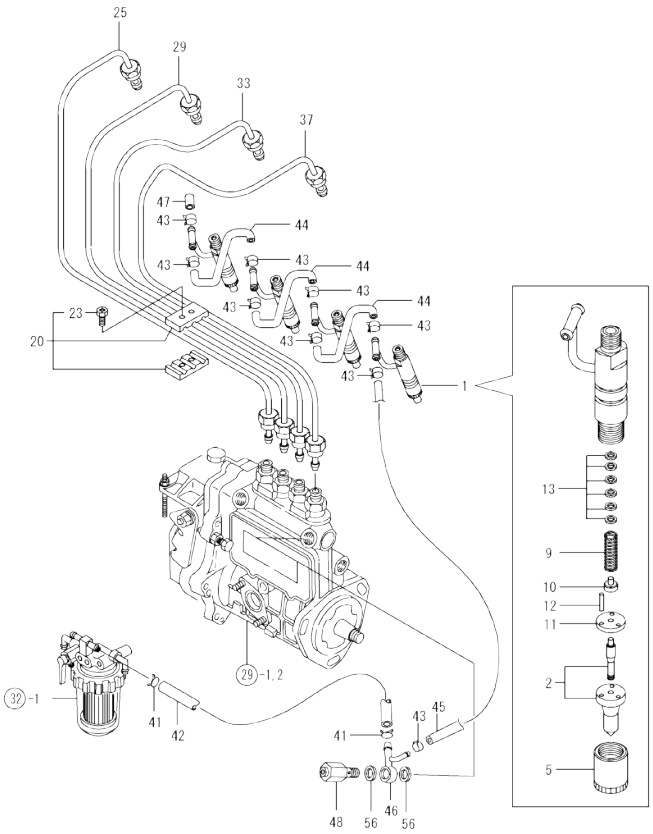

(A)=4TNE84-GB1
(B)=4TNE84-GB1S
(C)=
(D)=
(E)=
(F)=

No.	Lev.	Parts No.	Description	Q'ty (A)	(B)	(C)	(D)	(E)	(F)	I	R
1	1	719810-53100	VALVE ASSY,INJECTION	4	4						
2	2	119810-53000	VALVE ASSY,INJECTION	4	4						
5	2	114250-53080	NUT, NOZZLE D16.95	4	4						
9	2	114250-53120	SPRING, NOZZLE	4	4						
10	2	114250-53130	SEAT, SPRING	4	4						
11	2	114250-53140	PLATE	4	4						
12	2	114250-53210	PIN	8	8						
13	2	114250-53400	SHIM SET	4	4						
20	1	129150-59120	RETAINER, PIPE	2	2						
23	2	129150-59131	BOLT, M4X14	4	4						
25	1	129400-59910	PIPE ASSY, INJECTION	1	1						
29	1	129400-59920	PIPE ASSY, INJECTION	1	1						
33	1	129400-59930	PIPE ASSY, INJECTION	1	1						
37	1	129400-59940	PIPE ASSY, INJECTION	1	1						
41	1	124766-59050	CLIP, HOSE 12	2	2						
42	1	105025-59530	PIPE, FUEL D13X400	1	1						
43	1	124066-59100	CLIP, HOSE 8	9	9						
44	1	121250-59550	PIPE, FUEL D8X120	3	3						
45	1	119840-59560	PIPE, FUEL RETURN	1	1						
46	1	119840-59570	JOINT	1	1						
47	1	129150-59580	CAP	1	1						
48	1	129100-59951	VALVE ASSY, CHECK	1	1						
56	1	23414-120000	GASKET, 12X1.0	2	2						

N:Old ←Yes/No→ New. Q:Old ←No/Yes→ New. R:Old ←Yes/Yes→ New. S:Old ←No/No→ New. W:Add. Z:Discontinued. F:Interchangeable by set. K:Q'ty Change

Copyright (C) YANMAR GLOBAL CS CO., LTD. All RightsReserved.

Fig.32. FUEL LINE

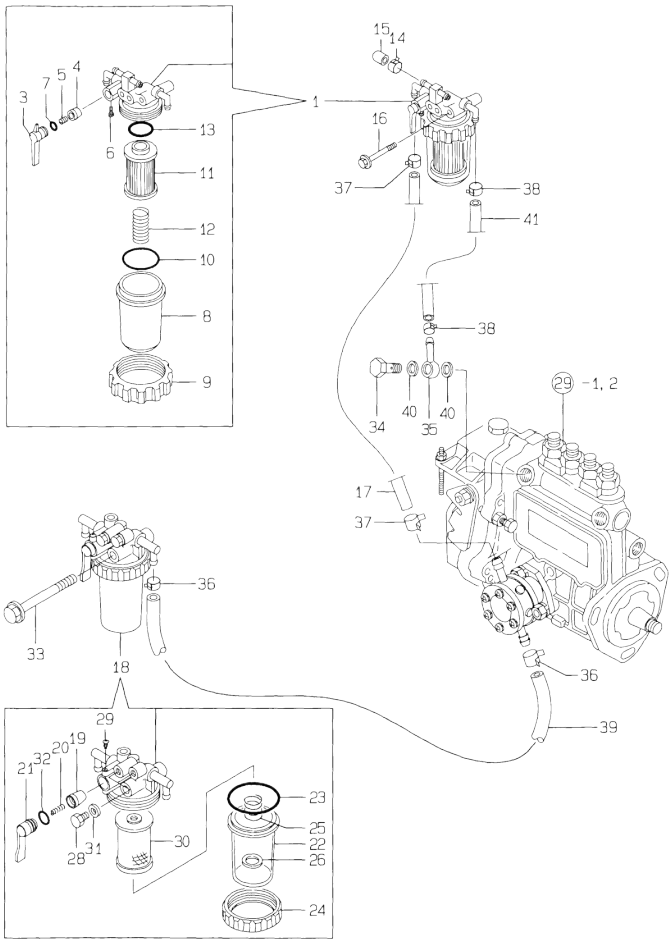

(A)=4TNE84-GB1
(B)=4TNE84-GB1S
(C)=
(D)=
(E)=
(F)=

No.	Lev.	Parts No.	Description	Q'ty (A)	(B)	(C)	(D)	(E)	(F)	I	R
1	1	129100-55621	FILTER ASSY, FUEL	1	1						
3	2	129100-55670	LEVER	1	1						
4	2	104200-55321	VALVE, TAPER	1	1						
5	2	104200-55330	SPRING, VALVE	1	1						
6	2	104200-55750	SCREW, M4	1	1						
7	2	24311-240100	O-RING, 1AP10A	1	1						
8	2	129100-55680	CUP, STRAINER	1	1						
9	2	129100-55690	RING, RETAINING	1	1						
10	2	24321-000650	O-RING, 1AG65.0	1	1						
11	2	129100-55650	ELEMENT	1	1						
12	2	129100-55700	SPRING	1	1						
13	2	24311-000160	O-RING, 1AP16.0	1	1						
14	1	124066-59100	CLIP, HOSE 8	1	1						
15	1	129150-59580	CAP	1	1						
16	1	26014-080702	BOLT, M8X 70	1	1						
17	1	105025-59530	PIPE, FUEL D13X400	1	1						
18	1	129335-55700	SEPARATOR ASSY,WATER	1	1						
19	2	104200-55321	VALVE, TAPER	1	1						
20	2	104200-55330	SPRING, VALVE	1	1						
21	2	104200-55341	HANDLE	1	1						
22	2	124064-55510	COVER	1	1						
23	2	102103-55520	O-RING	1	1						
24	2	110250-55610	RING, RETAINING	1	1						
25	2	121257-55720	SPRING	1	1						
26	2	121257-55731	FLOAT	1	1						
28	2	101720-55750	PLUG, 6	2	2						
29	2	104200-55750	SCREW, M4	1	1						
30	2	171081-55910	SCREEN	1	1						
31	2	23418-060000	GASKET, 6X1.0	2	2						
32	2	24311-240100	O-RING, 1AP10A	1	1						
33	1	26014-080702	BOLT, M8X 70	1	1						
34	1	103854-39140	BOLT, PIPE JOINT	1	1						
35	1	101304-59020	JOINT, PIPE 12	1	1						
36	1	124766-59050	CLIP, HOSE 12	2	2						
37	1	124766-59050	CLIP, HOSE 12	2	2						
38	1	124766-59050	CLIP, HOSE 12	2	2						
39	1	105025-59510	PIPE, FUEL	1	1						
40	1	22190-120002	WASHER, SEAL 12	2	2						
41	1	129555-59510	PIPE, D13/7.5X180	1	1						

N:Old ◄Yes/No► New. Q:Old ◄No/Yes► New. R:Old ◄Yes/Yes► New. S:Old ◄No/No► New. W:Add. Z:Discontinued. F:Interchangeable by set. K:Q'ty Change

Copyright (C) YANMAR GLOBAL CS CO., LTD. All RightsReserved.

Fig.33. STARTING MOTOR

(A)=4TNE84-GB1
(B)=4TNE84-GB1S
(C)=
(D)=
(E)=
(F)=

No.	Lev.	Parts No.	Description	Q'ty (A)	(B)	(C)	(D)	(E)	(F)	I	R
1	1	129407-77010	STARTER, RA1.4	1	1						
2	2	X0283060061	ROLLER	5	5						
3	2	129129-77460	SCREW	2	2						
4	2	X9490561370	NUT	1	1						
5	2	X9491200240	BALL	1	1						
6	2	129407-77210	YOKE ASSY	1	1						
7	2	129407-77220	ARMATURE ASSY	1	1						
8	3	129129-77230	BEARING	1	1						
9	3	129129-77240	BEARING	1	1						
10	2	129407-77250	STARTER	1	1						
11	3	X0280210230	NUT	1	1						
12	3	X0283270140	RETAINER	1	1						
13	3	129407-77410	SPRING	1	1						
14	3	129407-77390	CLUTCH ASSY	1	1						
17	3	129129-77400	SHAFT	1	1						
18	3	129129-77410	SPRING, COIL	1	1						
19	3	129129-77420	PINION, STARTER	1	1						
20	3	129129-77430	RING	1	1						
21	2	129129-77260	RETAINER	1	1						
22	2	129129-77270	PINION	1	1						
23	2	129407-77280	HOUSING	1	1						
24	2	129129-77290	FRAME	1	1						
25	2	129407-77300	HOLDER ASSY	1	1						
26	3	X9491730461	SPRING	4	4						
27	2	129407-77310	SWITCH ASSY	1	1						
28	2	129129-77320	BOLT	2	2						
29	2	129407-77330	BOLT	2	2						
30	2	129129-77340	SPRING	1	1						
31	2	129129-77350	O-RING	2	2						
32	2	129129-77362	COVER	1	1						
34	2	129129-77380	CAP	1	1						
35	1	26116-120252	BOLT, M12X 25 PLATED	2	2						

N:Old ◄Yes/No► New. Q:Old ◄No/Yes► New. R:Old ◄Yes/Yes► New. S:Old ◄No/No► New. W:Add. Z:Discontinued. F:Interchangeable by set. K:Q'ty Change

Copyright (C) YANMAR GLOBAL CS CO., LTD. All RightsReserved.

Fig.34. GENERATOR

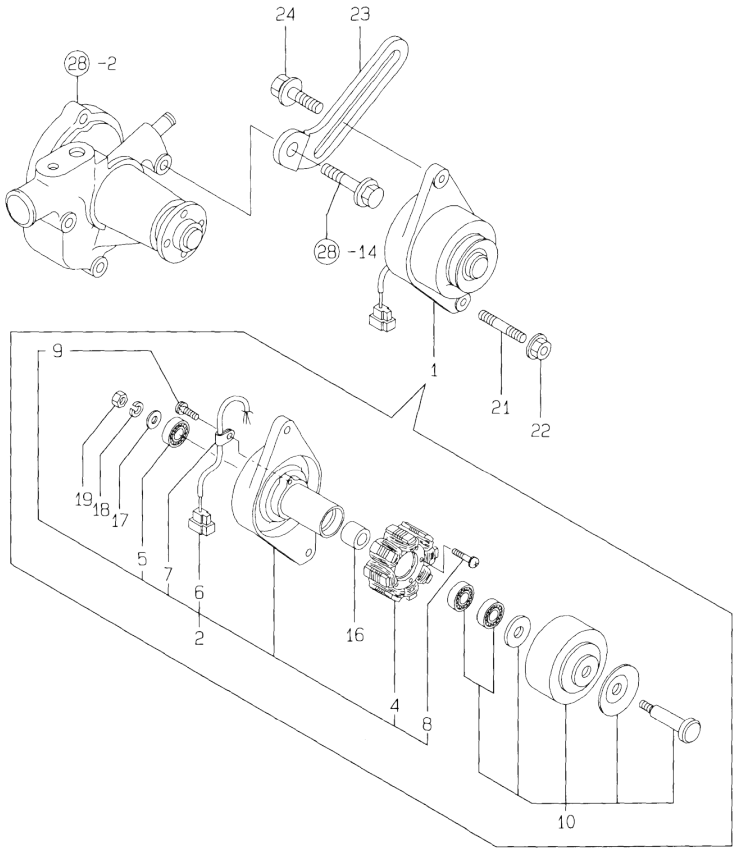

(A)=4TNE84-GB1
(B)=4TNE84-GB1S
(C)=
(D)=
(E)=
(F)=

No.	Lev.	Parts No.	Description	Q'ty (A)	(B)	(C)	(D)	(E)	(F)	I	R
1	1	171301-77201	DYNAMO ASSY, 15A	1	1						
2	2	XM08137	PLATE ASSY	1	1						
4	3	XM08180	STATOR SET	1	1						
5	3	XM27436	BEARING, BALL	1	1						
6	3	XM17878	COUPLER	1	1						
7	3	XM36410	CLAMP	1	1						
8	3	26022-040252	SCREW, M4X25	2	2						
9	3	XYSPS4008	SCREW	1	1						
10	2	XM82184	FLYWHEEL ASSY	1	1						
16	2	106383-44720	SPACER	1	1						
17	2	106383-44730	WASHER	1	1						
18	2	22212-100000	SPRING WASHER 10	1	1						
19	2	26716-100002	NUT, M10	1	1						
21	1	129795-01900	STUD	1	1						
22	1	26366-100002	NUT, M10	1	1						
23	1	129400-77330	ADJUSTER	1	1						
24	1	26014-080252	BOLT, M8X 25	1	1						

N:Old ◄Yes/No► New. Q:Old ◄No/Yes► New. R:Old ◄Yes/Yes► New. S:Old ◄No/No► New. W:Add. Z:Discontinued. F:Interchangeable by set. K:Q'ty Change

Copyright (C) YANMAR GLOBAL CS CO., LTD. All RightsReserved.

Fig.35. ELECTRICAL PARTS

(A)=4TNE84-GB1
(B)=4TNE84-GB1S
(C)=
(D)=
(E)=
(F)=

No.	Lev.	Parts No.	Description	Q'ty (A)	(B)	(C)	(D)	(E)	(F)	I	R
1	1	119643-66900	DIODE	1	1						
2	1	170029-67100	CABLE, PUSH-PULL		1						
3	1	119660-77710	LIMITER, CURRENT 15A	1	1						
3-1	1	119660-77711	LIMITER, CURRENT 15A	1	1					N	
	(A=E15853)		(B=E16375)								
4	1	171301-77720	COUPLER	1	1						
5	1	119643-77900	CONNECTOR, STARTER	1	1						
6	1	119650-77910	RELAY ASSY, GLOW	1	1						
9	1	119632-77920	TIMER	1	1						
10	1	129115-91250	SWITCH ASSY	1	1						
12	2	129115-91270	KEY ASSY	1	1						
13	1	170038-91310	LAMP	1	1						

N:Old ←Yes/No→ New. Q:Old ←No/Yes→ New. R:Old ←Yes/Yes→ New. S:Old ←No/No→ New. W:Add. Z:Discontinued. F:Interchangeable by set. K:Q'ty Change

Copyright (C) YANMAR GLOBAL CS CO., LTD. All RightsReserved.

Fig.36. GASKET SET & TOOL

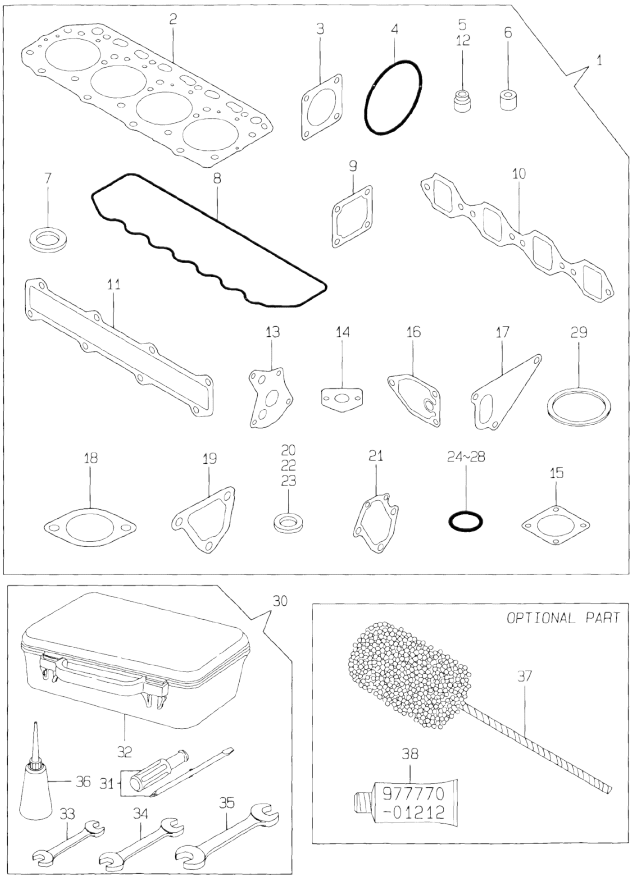

(A)=4TNE84-GB1
(B)=4TNE84-GB1S
(C)=
(D)=
(E)=
(F)=

No.	Lev.	Parts No.	Description	Q'ty (A)	(B)	(C)	(D)	(E)	(F)	I	R
1	1	729408-92640	GASKET SET	1	1						1
2	2	129408-01330	GASKET, HEAD	1	1						
3	2	124240-01883	GASKET	1	1						
4	2	121850-51960	O-RING	1	1						
5	2	124460-11340	SEAL, VALVE STEM	4	4						
6	2	119625-11871	PROTECTOR, NOZZLE	4	4						
7	2	119625-11880	SEAT, NOZZLE	4	4						
8	2	129550-11310	GASKET, BONNET	1	1						
9	2	129150-77511	GASKET	1	1						
10	2	129550-12111	GASKET, MANIFOLD	1	1						
11	2	129407-13110	GASKET	1	1						
12	2	121400-11340	SEAL, VALVE STEM	4	4						
13	2	129150-32020	GASKET, PUMP	1	1						
14	2	129150-35041	GASKET	1	1						
15	2	129400-13201	GASKET, SILENCER	1	1						
16	2	129150-35111	GASKET	1	1						
17	2	129100-42020	GASKET, WATER PUMP	1	1						
18	2	129795-49551	GASKET	1	1						
19	2	129100-49840	GASKET	1	1						
20	2	124465-44950	GASKET, 16	2	2						
21	2	129100-49820	GASKET	1	1						
22	2	23414-120000	GASKET, 12X1.0	2	2						
23	2	23414-100000	GASKET, 10X1.0	2	2						
24	2	24311-000120	O-RING, 1AP12.0	3	3						
25	2	24311-000160	O-RING, 1AP16.0	3	3						
26	2	24341-000240	O-RING, 1AS24.0	1	1						
27	2	24311-000320	O-RING, 1AP32.0	2	2						
28	2	24341-000500	O-RING, 1AS50.0	1	1						
29	2	129150-49811	GASKET, THERMOSTAT	1	1						
30	1	721400-92102	BOX ASSY, TOOL	1	1						
31	2	104200-92350	DRIVER, SCREW	1	1						
32	2	104200-92600	BOX, TOOL	1	1						
33	2	28110-100120	SPANNER, 10X12	1	1						
34	2	28110-140170	SPANNER, 14X17	1	1						
35	2	28110-190220	SPANNER, 19X22	1	1						
36	2	28210-000140	OILER	1	1						
37	1	129400-92420	HONE	1	1						1
38	1	977770-01212	GASKET, LIQUID	1	1						1

Remarks
(1) OPTIONAL PART.

N:Old ←Yes/No→ New. Q:Old ←No/Yes→ New. R:Old ←Yes/Yes→ New. S:Old ←No/No→ New. W:Add. Z:Discontinued. F:Interchangeable by set. K:Q'ty Change

Copyright (C) YANMAR GLOBAL CS CO., LTD. All RightsReserved.

Fig.37. CYLINDER BLOCK

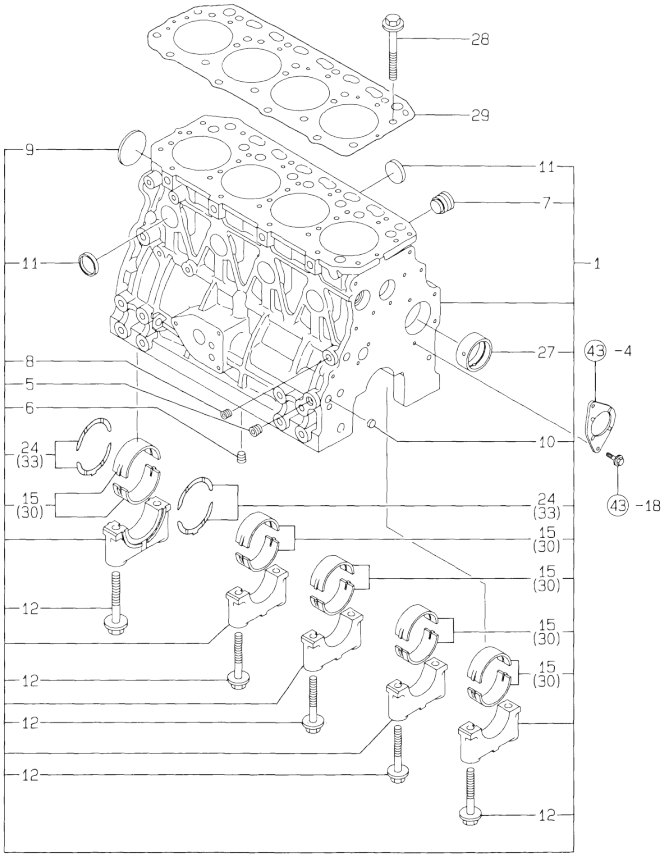

Remarks
(1) UNDER-SIZE(U.S=0.25)PART.
(2) OVER-SIZE(O.S=0.25)PART.

(A)=4TNE84T-GB1
(B)=4TNE84T-GB1S
(C)=
(D)=
(E)=
(F)=

No.	Lev.	Parts No.	Description	Q'ty (A)	(B)	(C)	(D)	(E)	(F)	I	R
1	1	729408-01560	BLOCK ASSY, CYLINDER	1	1						
5	2	124160-01910	PLUG, PT1/4	2	2						
6	2	124160-01910	PLUG, PT1/4	1	1						
7	2	171051-01921	PLUG, NPTF1	1	1						
8	2	23871-010000	PLUG, R01	1	1						
9	2	27231-500000	PLUG 50	1	1						
10	2	27241-120000	PLUG, 12	2	2						
11	2	27241-300000	PLUG 30	8	8						
12	2	129150-02020	BOLT, METAL CAP	10	10						
15	2	129001-02800	BEARING, MAIN	5	5						
24	2	129150-02930	BEARING, THRUST	2	2						
27	2	129795-02411	BUSH, CAMSHAFT	1	1						
28	1	129150-01200	BOLT, HEAD	18	18						
29	1	129408-01330	GASKET, HEAD	1	1						
30	1	129150-02870	BEARING, 0.25 US	5	5						1
33	1	129150-02940	BEARING, THRUST 0.25	2	2						2

N:Old ←Yes/No→ New. Q:Old ←No/Yes→ New. R:Old ←Yes/Yes→ New. S:Old ←No/No→ New. W:Add. Z:Discontinued. F:Interchangeable by set. K:Q'ty Change

Copyright (C) YANMAR GLOBAL CS CO., LTD. All RightsReserved.

Fig.38. GEAR HOUSING

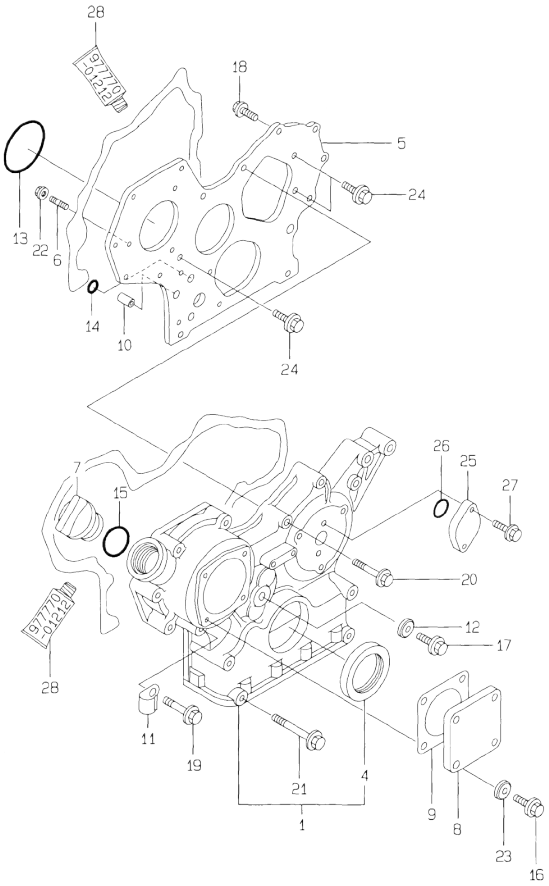

(A)=4TNE84T-GB1
(B)=4TNE84T-GB1S
(C)=
(D)=
(E)=
(F)=

No.	Lev.	Parts No.	Description	Q'ty (A)	(B)	(C)	(D)	(E)	(F)	I	R
1	1	719810-01500	CASE ASSY, GEAR	1	1						
4	2	129795-01800	SEAL, OIL	1	1						
5	1	129400-01520	FLANGE, GEAR CASE	1	1						
6	1	121450-01560	STUD, M8X22	3	3						
7	1	124160-01751	COVER, FILLER	1	1						
8	1	124240-01871	COVER	1	1						
9	1	124240-01883	GASKET	1	1						
10	1	129795-01950	PIPE, KNOCK L=18	2	2						
11	1	129150-03100	RETAINER, PIPE	1	1						
12	1	22190-080002	WASHER, SEAL 6	1	1						
13	1	121850-51960	O-RING	1	1						
14	1	24311-000160	O-RING, 1AP16.0	2	2						
15	1	24311-000320	O-RING, 1AP32.0	1	1						
16	1	26106-080122	BOLT, M8X 12 PLATED	4	4						
17	1	26106-080162	BOLT, M8X 16 PLATED	1	1						
18	1	26106-080202	BOLT, M8X 20 PLATED	2	2						
19	1	26106-080452	BOLT, M8X 45 PLATED	6	6						
20	1	26106-080552	BOLT, M8X 55 PLATED	3	3						
21	1	26106-080852	BOLT, M8X 85 PLATED	4	4						
22	1	26366-080002	NUT, M8	3	3						
23	1	22190-080002	WASHER, SEAL 6	4	4						
24	1	26106-080162	BOLT, M8X 16 PLATED	3	3						
25	1	121023-01550	COVER	1	1						
26	1	24341-000240	O-RING, 1AS24.0	1	1						
27	1	26106-060122	BOLT, M6X 12 PLATED	2	2						
28	1	977770-01212	GASKET, LIQUID	1	1						1

Remarks
(1) OPTIONAL PART.

N:Old ◄Yes/No► New. Q:Old ◄No/Yes► New. R:Old ◄Yes/Yes► New. S:Old ◄No/No► New. W:Add. Z:Discontinued. F:Interchangeable by set. K:Q'ty Change

Copyright (C) YANMAR GLOBAL CS CO., LTD. All RightsReserved.

Fig.39. FLYWHEEL HOUSING & OIL SUMP

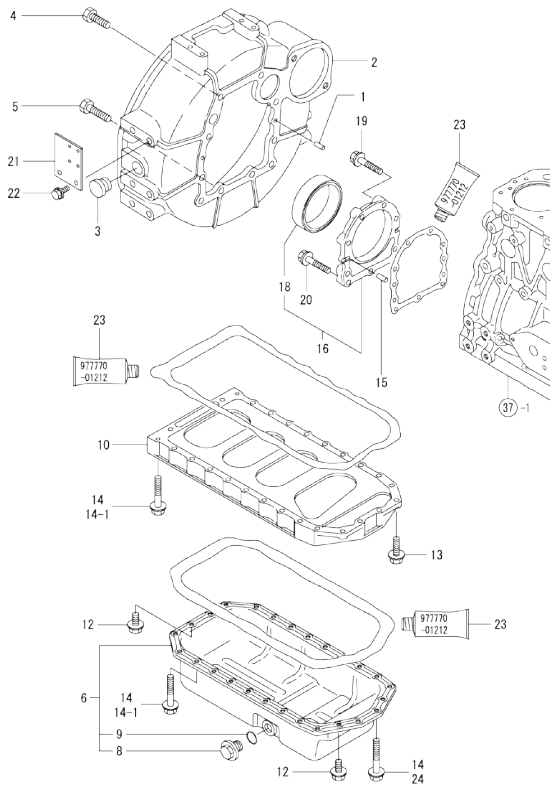

Remarks
(1)Optional parts.
(2)For repair.

(A)=4TNE84T-GB1
(B)=4TNE84T-GB1S
(C)=
(D)=
(E)=
(F)=

No.	Lev.	Parts No.	Description	Q'ty (A)	(B)	(C)	(D)	(E)	(F)	I	R
1	1	129100-01580	PIN, M8X16	2	2						
2	1	171420-01600	HOUSING, FLYWHEEL	1	1						
3	1	119620-01750	CAP	1	1						
4	1	26206-100252	BOLT, M10X 25 PLATED	6	6						
5	1	26206-100302	BOLT, M10X 30 PLATED	4	4						
6	1	129400-01770	SUMP ASSY, OIL	1	1						
6-1	1	129688-01780		1	1					N	2
	(A=REF. TO R)		(B=REF. TO R)								
8	2	171301-01640	PLUG, 22	1	1						
9	2	24341-000250	O-RING, 1AS25.0	1	1						
10	1	129400-01730	SPACER, OIL SUMP	1	1						
12	1	26106-080162	BOLT, M8X 16 PLATED	4	4						
13	1	26106-080252	BOLT, M8X 25 PLATED	2	2						
14	1	26106-080452	BOLT, M8X 45 PLATED	24	24						
14-1	1	26106-080452	BOLT, M8X 45 PLATED	20	20					K	
	(A=FROM 1ST)		(B=FROM 1ST)								
15	1	129100-01580	PIN, M8X16	2	2						
16	1	129100-01640	CASE ASSY, OIL SEAL	1	1						
18	2	129795-01780	SEAL, OIL	1	1						
19	1	129486-01670	BOLT, M8X30	6	6						
20	1	26106-080352	BOLT, M8X 35 PLATED	3	3						
21	1	129111-67010	SUPPORT, WIRE	1	1						
22	1	26106-080162	BOLT, M8X 16 PLATED	2	2						
23	1	977770-01212	GASKET, LIQUID	1	1						1
24	1	26106-080502	BOLT, M8X 50 PLATED	4	4					W	
	(A=FROM 1ST)		(B=FROM 1ST)								

N:Old $\frac{\text{Yes}}{\text{No}}$ New. Q:Old $\frac{\text{No}}{\text{Yes}}$ New. R:Old $\frac{\text{Yes}}{\text{Yes}}$ New. S:Old $\frac{\text{No}}{\text{No}}$ New. W:Add. Z:Discontinued. F:Interchangeable by set. K:Q'ty Change

Copyright (C) YANMAR GLOBAL CS CO., LTD. All RightsReserved.

Fig.40. CYLINDER HEAD & BONNET

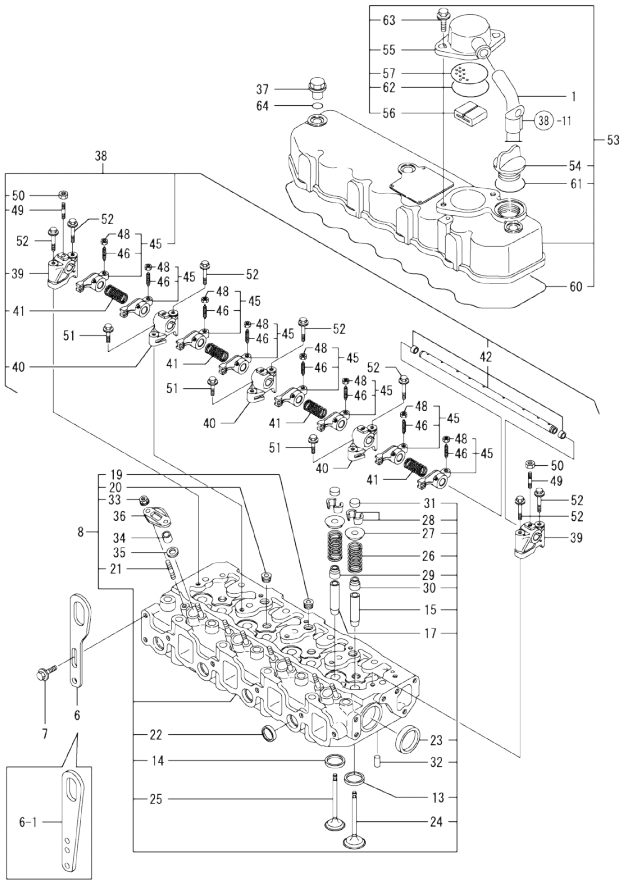

Remarks
(1) REPAIR PART.

(A)=4TNE84T-GB1
(B)=4TNE84T-GB1S
(C)=
(D)=
(E)=
(F)=

No.	Lev.	Parts No.	Description	Q'ty (A)	(B)	(C)	(D)	(E)	(F)	I	R
	(A=*2009.08)	(B=*2009.08)									
1	1	171350-03090	PIPE , BREATHER 900	1	1						
6	1	124736-07900	LIFTER	2	2						
6-1	1	129900-07900	LIFTER	2	2					N	
7	1	26106-080142	BOLT, M8X 14 PLATED	4	4						
8	1	729408-11700	HEAD ASSY, CYLINDER	1	1						
13	2	129470-11080	SEAT, INTAKE VALVE	4	4						
14	2	129470-11090	SEAT, EXHAUST VALVE	4	4						
15	2	120130-11860	GUIDE, VALVE	4	4						1
17	2	129150-11810	GUIDE, VALVE	4	4						1
19	2	23871-020000	PLUG, R02	3	3						
20	2	23871-030000	PLUG, R03	4	4						
21	2	26216-060202	STUD, M6X 20	8	8						
22	2	27241-220000	PLUG, 22	4	4						
23	2	27241-400000	PLUG, 40	2	2						
24	2	129100-11100	VALVE, INTAKE	4	4						
25	2	129100-11130	VALVE, EXHAUST	4	4						
26	2	129795-11120	SPRING, VALVE	8	8						
27	2	129795-11180	RETAINER, SPRING	8	8						
28	2	27310-080001	COTTER, 8	8	8						
29	2	121400-11340	SEAL, VALVE STEM	4	4						
30	2	124460-11340	SEAL, VALVE STEM	4	4						
31	2	129150-11370	CAP, VALVE	8	8						
32	2	22351-060012	PIN, SPRING 6.0X12	2	2						
33	2	26366-060002	NUT, M6	8	8						
34	1	119625-11871	PROTECTOR, NOZZLE	4	4						
35	1	119625-11880	SEAT, NOZZLE	4	4						
36	1	119625-11900	RETAINER, NOZZLE	4	4						
37	1	124160-11360	KNOB	3	3						
38	1	129500-11240	SHAFT ASSY, ROCKER	1	1						
39	2	129155-11260	SUPPORT, ROCKER ARM	2	2						
40	2	129155-11270	SUPPORT, ROCKER ARM	3	3						
41	2	129150-11280	SPRING	4	4						
42	2	129550-11290	SHAFT, ROCKER ARM	1	1						
45	2	129100-11650	ARM, ROCKER	8	8						
46	3	129150-11230	SCREW, VALVE ADJUST	8	8						
48	3	129150-11750	NUT, M8	8	8						
49	2	26226-080182	STUD, M8X 18	3	3						
50	2	26756-080002	NUT, LOCK M8	3	3						
51	1	26106-080252	BOLT, M8X 25 PLATED	3	3						
52	1	26106-080502	BOLT, M8X 50 PLATED	7	7						
53	1	129400-11350	BONNET ASSY, HEAD	1	1						
54	2	124160-01751	COVER, FILLER	1	1						
55	2	129150-03020	COVER, BREATHER	1	1						
56	2	129150-03070	BAFFLE, BREATHER	1	1						
57	2	129150-03080	PLATE, BAFFLE	1	1						
60	2	129550-11310	GASKET, BONNET	1	1						
61	2	24311-000320	O-RING, 1AP32.0	1	1						
62	2	24341-000500	O-RING, 1AS50.0	1	1						
63	2	26106-080162	BOLT, M8X 16 PLATED	2	2						
64	1	24311-000120	O-RING, 1AP12.0	3	3						

N:Old ←Yes/No→ New. Q:Old ←No/Yes→ New. R:Old ←Yes/Yes→ New. S:Old ←No/No→ New. W:Add. Z:Discontinued. F:Interchangeable by set. K:Q'ty Change

Copyright (C) YANMAR GLOBAL CS CO., LTD. All RightsReserved.

Fig.41. SUCTION MANIFOLD & AIR CLEANER

(A)=4TNE84T-GB1
(B)=4TNE84T-GB1S
(C)=
(D)=
(E)=
(F)=

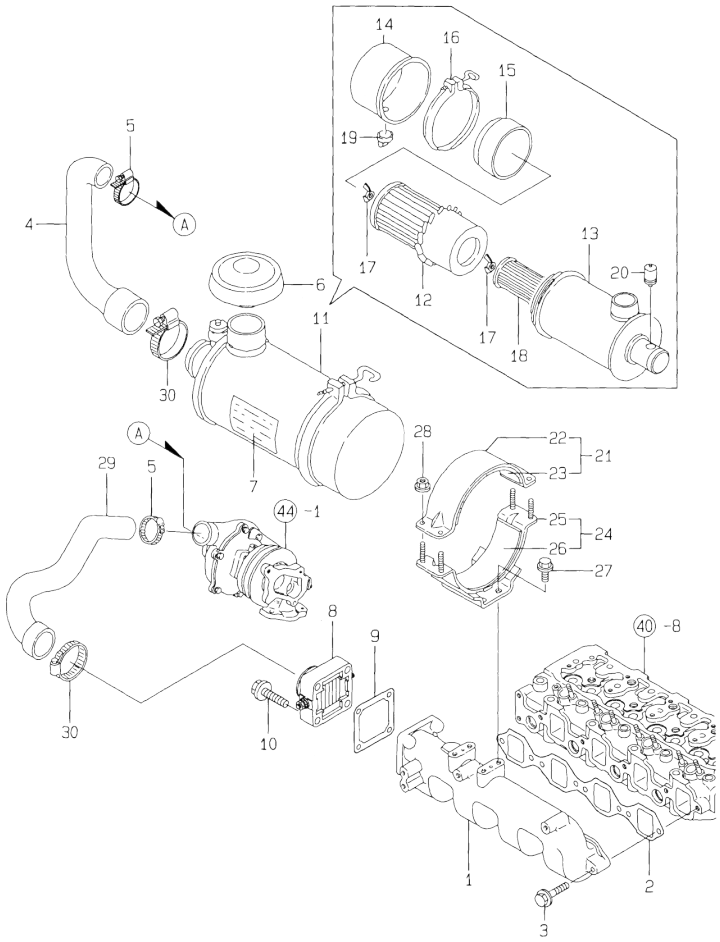

No.	Lev.	Parts No.	Description	Q'ty (A)	(B)	(C)	(D)	(E)	(F)	I	R
1	1	129488-12100	MANIFOLD, AIR INTAKE	1	1						
2	1	129550-12111	GASKET, MANIFOLD	1	1						
3	1	26106-080352	BOLT, M8X 35 PLATED	5	5						
4	1	129488-12050	PIPE, AIR INTAKE	1	1						
5	1	23000-050000	CLAMP 50	2	2						
6	1	121521-12400	CAP, RAIN	1							
7	1	171064-12600	LABEL, AIR CLEANER	1	1						
8	1	129120-77501	HEATER	1	1						
9	1	129150-77511	GASKET	1	1						
10	1	26106-080352	BOLT, M8X 35 PLATED	4	4						
11	1	121521-12500	CLEANER ASSY, AIR	1	1						
12	2	121420-12511	ELEMENT	1	1						
13	2	171061-12520	BODY ASSY	1	1						
14	2	121422-12530	CUP	1	1						
15	2	121420-12540	SCARF, BAFFLE	1	1						
16	2	121420-12550	CLAMP ASSY	1	1						
17	2	121420-12561	NUT, WING	2	2						
18	2	121422-12570	ELEMENT	1	1						
19	2	121422-12580	VALVE, UNLOADER	1	1						
20	2	126650-12680	INDICATOR	1	1						
21	1	121400-12540	BAND ASSY, CLEANER	1	1						
22	2	121400-12560	BAND, AIR CLEANER	1	1						
23	2	121400-12570	SEAT, RUBBER B	1	1						
24	1	171351-12580	SUPPORT ASSY,CLEANER	1	1						
25	2	171351-12560	SUPPORT, AIR CLEANER	1	1						
26	2	171351-12570	SEAT, RUBBER	1	1						
27	1	26106-080142	BOLT, M8X 14 PLATED	4	4						
28	1	26366-060002	NUT, M6	4	4						
29	1	129488-12060	PIPE, AIR INTAKE	1	1						
30	1	23000-070000	CLAMP, 70	2	2						

N:Old ◄Yes/No► New. Q:Old ◄No/Yes► New. R:Old ◄Yes/Yes► New. S:Old ◄No/No► New. W:Add. Z:Discontinued. F:Interchangeable by set. K:Q'ty Change

Copyright (C) YANMAR GLOBAL CS CO., LTD. All RightsReserved.

Fig.42. EXHAUST MANIFOLD & SILENCER

(A)=4TNE84T-GB1
(B)=4TNE84T-GB1S
(C)=
(D)=
(E)=
(F)=

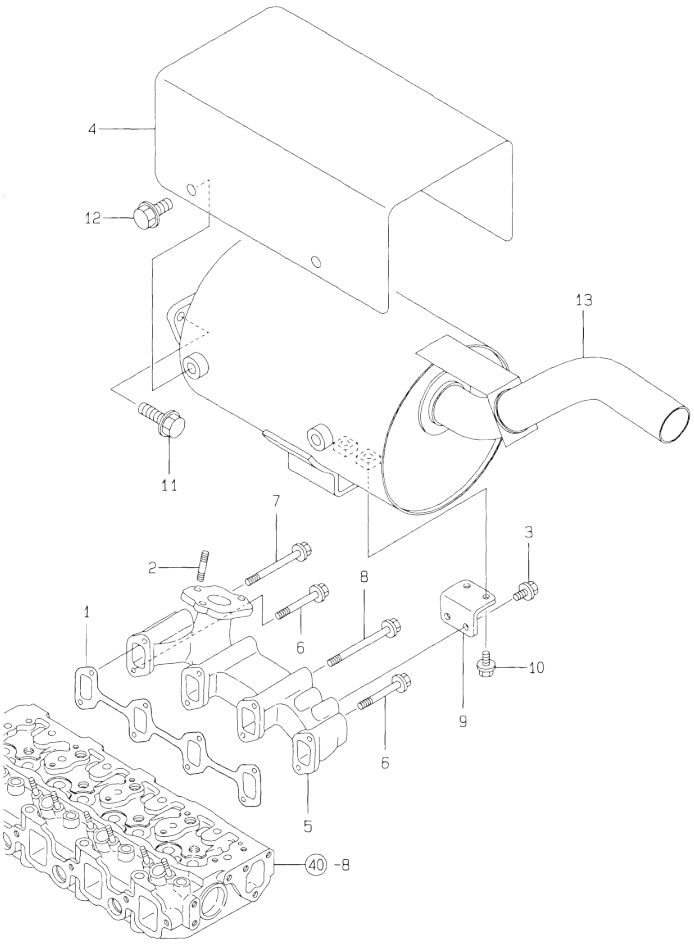

No.	Lev.	Parts No.	Description	Q'ty (A)	(B)	(C)	(D)	(E)	(F)	I	R
1	1	129550-13110	GASKET	1	1						
2	1	119131-18320	STUD, M8X22	3	3						
2-1	1	129418-18320	STUD, M8X20	3	3						N
	(A=E01525)	(B=E01551)									
3	1	26106-080142	BOLT, M8X 14 PLATED	2							
4	1	129412-13600	COVER, SILENCER	1							
5	1	129403-13130	MANIFOLD, EXHAUST	1	1						
6	1	26106-080652	BOLT, M8X 65 PLATED	3	3						
6-1	1	119802-13650	BOLT, M8X65	3	3						N
	(A=E01899)	(B=E01923)									
7	1	26106-080852	BOLT, M8X 85 PLATED	1	1						
7-1	1	119802-13670	BOLT, M8X85	1	1						N
	(A=E01899)	(B=E01923)									
8	1	26106-081002	BOLT, M8X100 PLATED	4	4						
8-1	1	129693-44310	BOLT	4	4						N
	(A=E01899)	(B=E01923)									
8-2	1	119802-13820	BOLT, M8X100 9.8T	4	4						N
	(A=*2009.12)	(B=*2009.12)									
9	1	129403-13540	SUPPORT, SILENCER	1							
10	1	26106-080202	BOLT, M8X 20 PLATED	2							
11	1	26106-080202	BOLT, M8X 20 PLATED	4							
12	1	26106-080122	BOLT, M8X 12 PLATED	4							
13	1	129412-13500	SILENCER	1							

N:Old ◄Yes/No► New. Q:Old ◄No/Yes► New. R:Old ◄Yes/Yes► New. S:Old ◄No/No► New. W:Add. Z:Discontinued. F:Interchangeable by set. K:Q'ty Change

Copyright (C) YANMAR GLOBAL CS CO., LTD. All RightsReserved.

Fig.43. CAMSHAFT & DRIVING GEAR

(A)=4TNE84T-GB1
(B)=4TNE84T-GB1S
(C)=
(D)=
(E)=
(F)=

No.	Lev.	Parts No.	Description	Q'ty (A)	(B)	(C)	(D)	(E)	(F)	I	R
1	1	129150-14200	TAPPET	8	8						
2	1	129150-14400	ROD, PUSH L=178	8	8						
3	1	729402-14580	CAMSHAFT ASSY	1	1						
4	2	129150-02450	BEARING, THRUST	1	1						
7	2	129150-14101	GEAR, CAMSHAFT	1	1						
8	2	22512-070140	KEY, 7X 14	1	1						
9	1	129100-25061	SHAFT, IDLE	1	1						
10	1	129150-25101	GEAR ASSY, IDLE	1	1						
13	2	129150-25920	BUSH, IDLE GEAR	1	1						1
14	1	26106-080452	BOLT, M8X 45 PLATED	2	2						
15	1	129150-25900	GEAR, PUMP	1	1						
16	1	22217-120000	WASHER, SPRING 12	1	1						
17	1	26716-120002	NUT, M12	1	1						
18	1	26106-080162	BOLT, M8X 16 PLATED	2	2						

Remarks
(1) REPAIR PART.

N:Old ←Yes/No→ New. Q:Old ←No/Yes→ New, R:Old ←Yes/Yes→ New, S:Old ←No/No→ New. W:Add. Z:Discontinued. F:Interchangeable by set. K:Q'ty Change

Copyright (C) YANMAR GLOBAL CS CO., LTD. All RightsReserved.

Fig.44. TURBOCHARGER

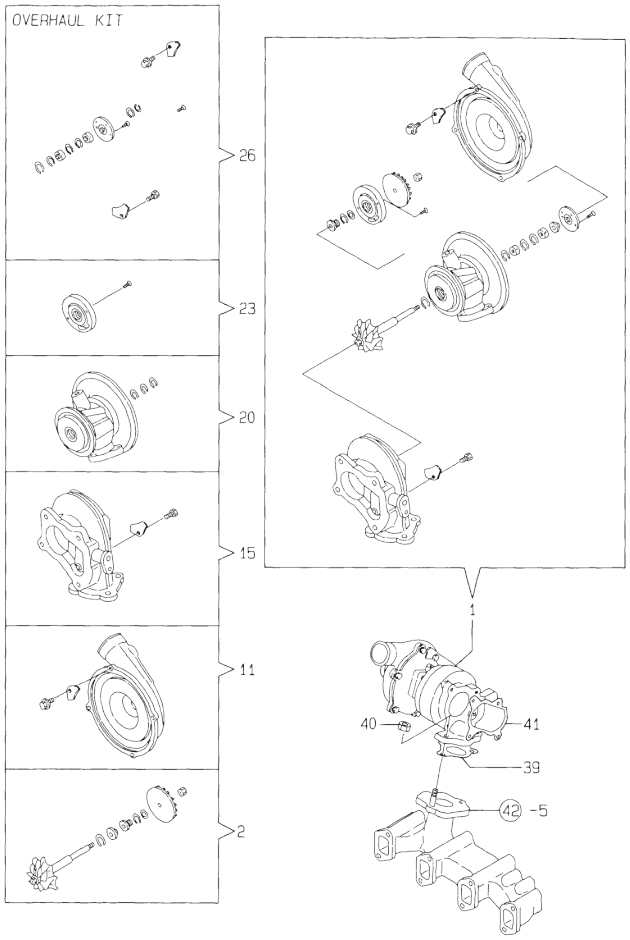

(A)=4TNE84T-GB1
(B)=4TNE84T-GB1S
(C)=
(D)=
(E)=
(F)=

No.	Lev.	Parts No.	Description	Q'ty (A)	(B)	(C)	(D)	(E)	(F)	I	R
1	1	129406-18010	TURBINE, RHB31	1	1						
2	2	129406-18770	ROTOR ASSY	1	1						
11	2	129406-18780	HOUSING ASSY	1	1						
15	2	129406-18790	HOUSING ASSY	1	1						
20	2	129403-18800	HOUSING ASSY	1	1						
23	2	129406-18820	PLATE ASSY, SEAL	1	1						
26	2	129406-18830	OVERHALL KIT	1	1						
39	1	129477-18101	GASKET	1	1						
40	1	194990-22050	NUT, M8	3	3						
41	1	129403-18091	GASKET	1	1						

N:Old ←Yes/No→ New. Q:Old ←No/Yes→ New, R:Old ←Yes/Yes→ New, S:Old ←No/No→ New, W:Add, Z:Discontinued, F:Interchangeable by set, K:Q'ty Change

Copyright (C) YANMAR GLOBAL CS CO., LTD. All RightsReserved.

Fig.45. CRANKSHAFT & PISTON

(A)=4TNE84T-GB1
(B)=4TNE84T-GB1S
(C)=
(D)=
(E)=
(F)=

No.	Lev.	Parts No.	Description	Q'ty (A)	(B)	(C)	(D)	(E)	(F)	I	R
1	1	129407-21000	CRANKSHAFT ASSY	1	1						
2	2	129100-01580	PIN, M8X16	1	1						
5	2	129150-21200	GEAR, CRANKSHAFT	1	1						
6	2	22512-070140	KEY, 7X 14	1	1						
8	1	22351-040010	PIN, SPRING 4.0X10	1	1						
9	1	129550-21650	V-PULLEY	1	1						
10	1	129795-21661	WASHER	1	1						
11	1	121850-21680	BOLT	1	1						
12	1	121111-21501	BOLT, FLYWHEEL	6	6						
13	1	171420-21590	FLYWHEEL ASSY	1	1						
16	2	124550-21600	GEAR, RING	1	1						
17	1	129002-22090	PISTON ASSY	4	4						
19	2	129002-22510	RING SET, PISTON	4	4						
23	1	129202-22300	PIN, PISTON D26 L70	4	4						
24	1	22252-000260	RING, 26	8	8						
25	1	729402-23100	ROD ASSY, CONNECTING	4	4						
29	2	129100-23910	BEARING, PISTON PIN	4	4						1
30	2	121550-23200	BOLT, CONNECTING ROD	8	8						
31	2	129150-23600	BEARING, CRANK PIN	4	4						
33	1	129002-22910	PISTON ASSY, 0.25 OS	4	4						2
35	2	129002-22960	RING SET, 0.25 OS	4	4						2
39	1	129150-23610	BEARING, 0.25 US	4	4						3

Remarks
(1) REPAIR PART.
(2) OVER-SIZE(O.S=0.25)PART.
(3) UNDER-SIZE(U.S=0.25)PART.

N:Old ◄Yes/No► New. Q:Old ◄No/Yes► New, R:Old ◄Yes/Yes► New, S:Old ◄No/No► New, W:Add, Z:Discontinued, F:Interchangeable by set, K:Q'ty Change

Copyright (C) YANMAR GLOBAL CS CO., LTD. All RightsReserved.

Fig.46. LUB. OIL SYSTEM

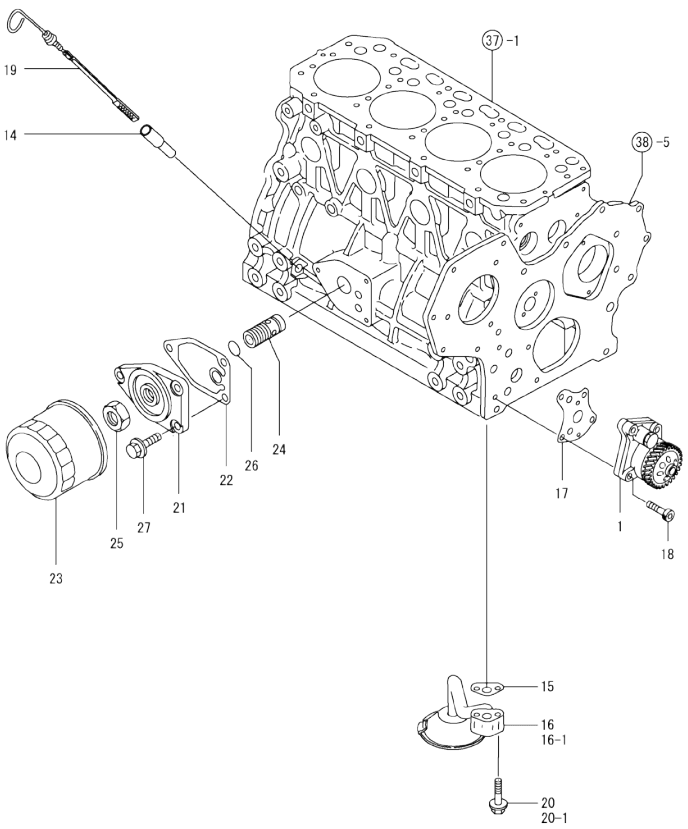

(A)=4TNE84T-GB1
(B)=4TNE84T-GB1S
(C)=
(D)=
(E)=
(F)=

No.	Lev.	Parts No.	Description	Q'ty (A)	(B)	(C)	(D)	(E)	(F)	I	R
1	1	129407-32000	PUMP ASSY, OIL	1	1						
14	1	121520-34810	GUIDE, DIPSTICK	1	1						
15	1	129150-35041	GASKET	1	1						
15-1	1	129150-35042	GASKET	1	1					N	
	(A=EZZZZZ)	(B=EZZZZZ)									
16	1	129436-35091	PIPE ASSY, OIL INLET	1	1						
16-1	1	129436-35070	PIPE ASSY	1	1					S	
	(A=EZZZZZ)	(B=EZZZZZ)									
17	1	129150-32020	GASKET, PUMP	1	1						
18	1	26450-060252	BOLT, M6X 25	4	4						
19	1	171420-34820	DIPSTICK, OIL	1	1						
20	1	26106-080352	BOLT, M8X 35 PLATED	2	2						
20-1	1	26106-080552	BOLT, M8X 55 PLATED	2	2					S	
	(A=EZZZZZ)	(B=EZZZZZ)									
21	1	129150-35101	BRACKET, STRAINER	1	1						
22	1	129150-35111	GASKET	1	1						
23	1	129150-35151	FILTER, D80XL80	1	1						
24	1	129001-35300	BOLT, FILTER	1	1						
25	1	129150-35350	NUT	1	1						
26	1	24311-000160	O-RING, 1AP16.0	1	1						
27	1	26106-080202	BOLT, M8X 20 PLATED	3	3						

N:Old ←Yes/No→ New. Q:Old ←No/Yes→ New. R:Old ←Yes/Yes→ New. S:Old ←No/No→ New. W:Add. Z:Discontinued. F:Interchangeable by set. K:Q'ty Change

Copyright (C) YANMAR GLOBAL CS CO., LTD. All RightsReserved.

Fig.47. LUB. OIL LINE

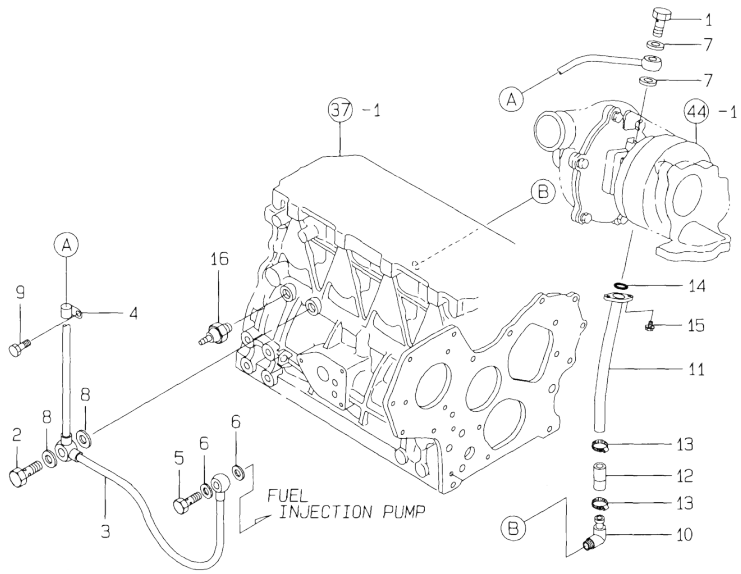

(A)=4TNE84T-GB1
(B)=4TNE84T-GB1S
(C)=
(D)=
(E)=
(F)=

No.	Lev.	Parts No.	Description	Q'ty (A)	(B)	(C)	(D)	(E)	(F)	I	R
1	1	105010-39140	BOLT, PIPE JOINT	1	1						
2	1	124160-39140	BOLT, PIPE JOINT M10	1	1						
3	1	129403-39450	PIPE ASSY, OIL	1	1						
4	1	124223-39900	RETAINER	1	1						
5	1	124550-59820	BOLT, PIPE JOINT M8	1	1						
6	1	22190-080002	WASHER, SEAL 6	2	2						
7	1	23414-080000	GASKET, 8X1.0	2	2						
8	1	23414-100000	GASKET, 10X1.0	2	2						
9	1	26106-080102	BOLT, M8X 10 PLATED	1	1						
10	1	128270-13620	JOINT, PIPE PT3/8	1	1						
11	1	129403-39600	PIPE, OIL	1	1						
12	1	129403-39610	JOINT, RUBBER	1	1						
13	1	23000-022000	CLAMP, 22	2	2						
14	1	24314-000160	O-RING, 4CP16.0	1	1						
15	1	26106-060162	BOLT, M6X 16 PLATED	2	2						
16	1	124160-39450	SWITCH, 0.5KG	1	1						

N:Old ←Yes/No→ New. Q:Old ←No/Yes→ New. R:Old ←Yes/Yes→ New. S:Old ←No/No→ New. W:Add. Z:Discontinued. F:Interchangeable by set. K:Q'ty Change

Copyright (C) YANMAR GLOBAL CS CO., LTD. All RightsReserved.

Fig.48. COOLING WATER SYSTEM

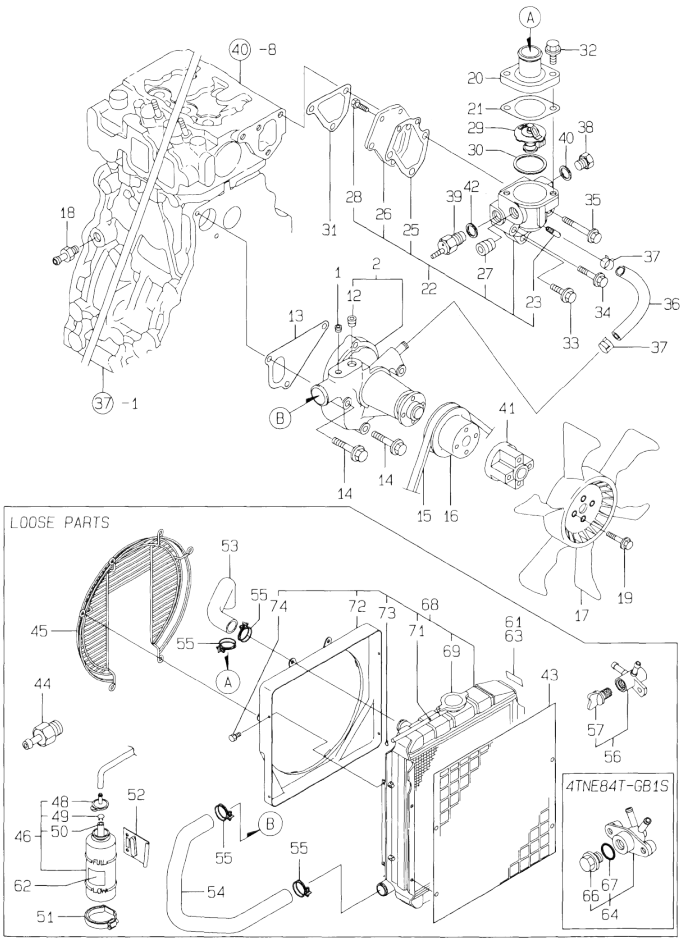

(A)=4TNE84T-GB1
(B)=4TNE84T-GB1S
(C)=
(D)=
(E)=
(F)=

No.	Lev.	Parts No.	Description	Q'ty (A)	(B)	(C)	(D)	(E)	(F)	I	R
1	1	121850-11860	PLUG, PT1/4	1	1						
2	1	129100-42003	PUMP ASSY, WATER	1	1						
12	2	23871-030000	PLUG, R03	1	1						
13	1	129100-42020	GASKET, WATER PUMP	1	1						
14	1	26106-080602	BOLT, M8X 60 PLATED	3	3						
15	1	25132-003700	V-BELT, A37	1	1						
16	1	129155-42350	V-PULLEY	1	1						
17	1	129432-44740	FAN, COOLING D370XEF	1	1						
18	1	121550-49111	JOINT, PT1/4	1	1						
19	1	26106-060352	BOLT, M6X 35 PLATED	4	4						
20	1	129350-49530	COVER, THERMOSTAT	1	1						
21	1	129795-49551	GASKET	1	1						
22	1	129100-49800	CASE ASSY,THERMOSTAT	1	1						
23	2	124770-11770	JOINT, PIPE PT1/8	1	1						
25	2	129100-49820	GASKET	1	1						
26	2	129100-49830	COVER, THERMOSTAT	1	1						
27	2	23871-030000	PLUG, R03	1	1						
28	2	26116-060162	BOLT, M6X 16 PLATED	2	2						
29	1	129155-49800	THERMOSTAT, 71	1	1						
30	1	129150-49811	GASKET, THERMOSTAT	1	1						
31	1	129100-49840	GASKET	1	1						
32	1	26106-080202	BOLT, M8X 20 PLATED	2	2						
33	1	26106-080252	BOLT, M8X 25 PLATED	1	1						
34	1	26106-080502	BOLT, M8X 50 PLATED	1	1						
35	1	26106-080602	BOLT, M8X 60 PLATED	1	1						
36	1	129132-49050	PIPE, WATER	1	1						
37	1	23000-016000	CLAMP, 16	2	2						
38	1	121450-42450	PLUG, M16	1	1						
39	1	121250-44901	SWITCH, 110	1	1						
40	1	124465-44950	GASKET, 16	1	1						
41	1	171353-44760	SPACER, FAN	1	1						
42	1	124465-44950	GASKET, 16	1	1						
43	1	129411-44590	PROTECTOR	1							
44	1	129137-49100	JOINT	1	1						
45	1	129420-44560	PROTECTOR, FAN	1	1						
46	1	124450-44510	TANK ASSY, SUB	1	1						
48	2	124450-44530	CAP	1	1						
49	2	124450-44560	RETAINER	1	1						
50	2	23061-070230	PIPE, 7X 230	1	1						
51	1	124450-44550	BAND	1	1						
52	1	121256-44600	BRACKET, SUB TANK	1	1						
53	1	171420-49010	PIPE, WATER	1	1						
54	1	171420-49020	PIPE, WATER	1	1						
55	1	23010-038000	CLAMP, 38	4	4						
56	1	129150-49100	COCK ASSY, 3-WAY	1							
57	2	129150-49080	COCK, DRAIN	1							
61	1	124764-44800	LABEL, RADIATOR	1	1						
62	1	124764-44810	LABEL, SUB TANK	1	1						
63	1	121400-44910	LABEL, RADIATOR	1	1						
64	1	121450-49110	COCK ASSY, 3-WAY		1						
66	2	121250-49121	PLUG, DRAIN		1						

N:Old ◄Yes/No► New. Q:Old ◄No/Yes► New. R:Old ◄Yes/Yes► New. S:Old ◄No/No► New. W:Add. Z:Discontinued. F:Interchangeable by set. K:Q'ty Change

++ CONTINUE ++

Copyright (C) YANMAR GLOBAL CS CO., LTD. All RightsReserved.

Fig.48. COOLING WATER SYSTEM

(A)=4TNE84T-GB1
(B)=4TNE84T-GB1S
(C)=
(D)=
(E)=
(F)=

No.	Lev.	Parts No.	Description	Q'ty (A)	(B)	(C)	(D)	(E)	(F)	I	R
67	2	24311-000160	O-RING, 1AP16.0		1						
68	1	129408-44500	RADIATOR	1	1						
69	2	119259-44570	CAP, RADIATOR	1	1						
71	2	129132-44530	HOSE, RUBBER	1	1						
72	2	129420-44550	SHROUD ASSY	1	1						
73	2	121250-44590	CLAMP	2	2						
74	2	26014-060122	BOLT, M6X 12	4	4						

N:Old ←Yes/No→ New. Q:Old ←No/Yes→ New. R:Old ←Yes/Yes→ New. S:Old ←No/No→ New. W:Add. Z:Discontinued. F:Interchangeable by set. K:Q'ty Change

Copyright (C) YANMAR GLOBAL CS CO., LTD. All RightsReserved.

Fig.49. FUEL INJECTION PUMP

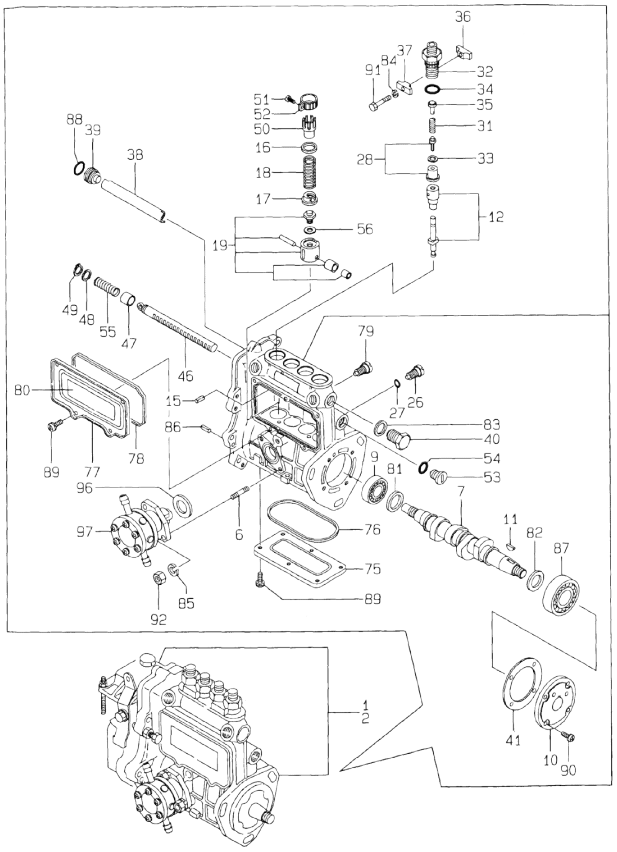

Remarks
(1)GOVERNOR ASSY(FIG.50)IS
INCORPORATED IN THIS FUEL
INJECTION PUMP ASSY(REF.NO.1,2).

(A)=4TNE84T-GB1
(B)=4TNE84T-GB1S
(C)=
(D)=
(E)=
(F)=

No.	Lev.	Parts No.	Description	Q'ty (A)	(B)	(C)	(D)	(E)	(F)	I	R
1	1	729613-51310	PUMP ASSY, INJECTION	1							1
2	1	729418-51300	PUMP ASSY, INJECTION		1						1
6	2	129155-51020	STUD	2	2						
7	2	129506-51040	CAMSHAFT	1	1						
9	2	129155-51050	BEARING, 17BM001D	1	1						
10	2	129155-51060	SUPPORT, CAMSHAFT	1	1						
11	2	122710-51090	KEY	1	1						
12	2	129470-51101	PLUNGER ASSY	4	4						
15	2	129155-51140	PIN	4	4						
16	2	174307-51170	RETAINER, SPRING A	4	4						
17	2	129155-51180	RETAINER, SPRING	4	4						
18	2	124950-51190	SPRING, PLUNGER	4	4						
19	2	129155-51200	TAPPET ASSY	4	4						
26	2	129155-51270	STOPPER, TAPPET	4	4						
27	2	129155-51280	O-RING, S6	4	4						
28	2	129100-51300	VALVE ASSY, DELIVERY	4	4						
31	2	129155-51320	SPRING, DELIVERY	4	4						
32	2	129155-51340	RETAINER	4	4						
33	2	124550-51350	GASKET, DELIVERY	4	4						
34	2	124550-51370	O-RING	4	4						
35	2	129155-51370	STOPPER, VALVE	4	4						
36	2	129155-51380	STOPPER	2	2						
37	2	129155-51390	STOPPER	2	2						
38	2	129555-51400	DEFLECTOR	1	1						
39	2	129155-51410	BOLT	1	1						
40	2	129155-51420	PLUG, M16	1	1						
41	2	129155-51450	SHIM SET, ADJUSTING	1	1						
46	2	129555-51500	RACK, CONTROL	1	1						
47	2	129155-51521	BUSH, RACK	1	1						
48	2	129155-51530	SPACER	1	1						
49	2	129155-51540	CIRCLIP	1	1						
50	2	129155-51550	PINION, CONTROL	4	4						
51	2	122117-51560	SCREW	4	4						
52	2	174307-51560	PINION	4	4						
53	2	129155-51570	PLUG, M12	1	1						
54	2	129155-51580	O-RING	1	1						
55	2	129155-51591	SPRING, RACK	1	1						
56	2	129155-51600	SHIM SET, ADJUSTING	4	4						
75	2	129555-51700	COVER	1	1						
76	2	129555-51710	GASKET	1	1						
77	2	129555-51750	COVER	1	1						
78	2	129555-51760	GASKET	1	1						
79	2	129155-51790	STOOPER, RACK	1	1						
80	2	129156-51910	LABEL, CAUTION	1	1						
81	2	129155-51930	SPACER, T=3.25	1	1						
82	2	129155-51940	SPACER, T=1.5	1	1						
83	2	22190-160002	WASHER, SEAL 16	1	1						
84	2	22217-050000	WASHER, SPRING 5	2	2						
85	2	22217-060000	WASHER, SPRING 6	2	2						
86	2	22351-050010	PIN, SPRING 5.0X10	2	2						
87	2	24101-063034	BEARING, BALL 6303	1	1						

N:Old ←Yes/No→ New. Q:Old ←No/Yes→ New. R:Old ←Yes/Yes→ New. S:Old ←No/No→ New. W:Add. Z:Discontinued. F:Interchangeable by set. K:Q'ty Change

++ CONTINUE ++

Copyright (C) YANMAR GLOBAL CS CO., LTD. All RightsReserved.

Fig.49. FUEL INJECTION PUMP

(A)=4TNE84T-GB1
(B)=4TNE84T-GB1S
(C)=
(D)=
(E)=
(F)=

No.	Lev.	Parts No.	Description	Q'ty (A)	(B)	(C)	(D)	(E)	(F)	I	R
88	2	24341-000160	O-RING, 1AS16.0	1	1						
89	2	26022-050102	SCREW, M5X10	11	11						
90	2	26022-060162	SCREW, M6X16	4	4						
91	2	26116-050302	BOLT, M5X 30 PLATED	2	2						
92	2	26716-060002	NUT, M6	2	2						
96	2	129155-52050	GASKET	1	1						
97	2	129100-52100	PUMP ASSY, FUEL FEED	1	1						

Remarks
(1)GOVERNOR ASSY(FIG.50)IS
INCORPORATED IN THIS FUEL
INJECTION PUMP ASSY(REF.NO.1,2).

N:Old ←Yes/No→ New. Q:Old ←No/Yes→ New. R:Old ←Yes/Yes→ New. S:Old ←No/No→ New. W:Add. Z:Discontinued. F:Interchangeable by set. K:Q'ty Change

Copyright (C) YANMAR GLOBAL CS CO., LTD. All RightsReserved.

Fig.50. GOVERNOR

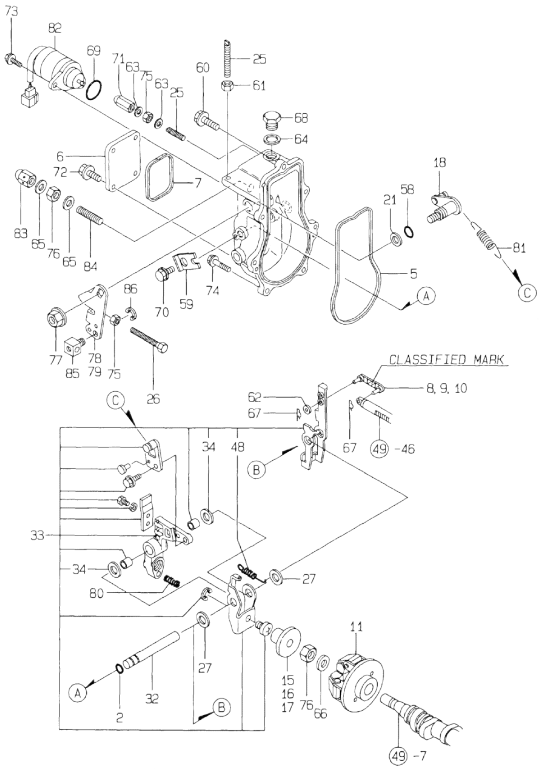

(A)=4TNE84T-GB1
(B)=4TNE84T-GB1S
(C)=
(D)=
(E)=
(F)=

No.	Lev.	Parts No.	Description	Q'ty (A)	(B)	(C)	(D)	(E)	(F)	I	R
2	2	129155-51280	O-RING, S6	1	1						
5	2	129052-61050	GASKET	1	1						
6	2	129052-61060	COVER, GOVERNOR CASE	1	1						
7	2	129052-61070	GASKET	1	1						
8	2	129155-61120	LINK, L=30 MARK 0	1	1						1
9	2	129155-61130	LINK, L=31 MARK 1	1	1						1
10	2	129155-61140	LINK, L=30.5 MARK 05	1	1						1
11	2	171488-61200	WEIGHT ASSY,GOVERNOR	1	1						
15	2	129155-61341	SLEEVE	1	1						2
16	2	129155-61350	SLEEVE, L=24.9	1	1						2
17	2	129155-61360	SLEEVE, L=25.2	1	1						2
18	2	129100-61400	SHAFT ASSY	1	1						
21	2	129155-61430	SPACER	1	1						
25	2	129155-61450	BOLT, LIMITER	2	2						
26	2	129155-61460	BOLT, IDLE	1	1						
27	2	129155-61480	SPACER ASSY	2	2						
32	2	129052-61390	SHAFT	1	1						
33	2	129412-61500	LEVER ASSY, GOVERNOR	1	1						
34	3	174307-51700	SHIM SET	2	2						
48	3	119843-61540	SPRING, SET	1	1						
58	2	129155-61830	O-RING, S10	1	1						
59	2	119660-61901	RETAINER, SHAFT	1	1						
60	2	129155-61950	BOLT	1	1						
61	2	124550-66370	NUT, M6	1	1						
62	2	22117-040000	WASHER, 4	1	1						
63	2	22190-060002	WASHER, SEAL 6	2	2						
64	2	22190-100002	WASHER, SEAL 10	1	1						
65	2	22190-120002	WASHER, SEAL 12	2	2						
66	2	22287-120000	WASHER, 12	1	1						
67	2	22372-040000	PIN, SNAP 4	2	2						
68	2	23887-100002	PLUG, 10	1	1						
69	2	24341-000280	O-RING, 1AS28.0	1	1						
69-1	2	158552-61900	O-RING	1	1					N	
	(A=EXXXXX)	(B=EXXXXX)									
70	2	26106-060102	BOLT, M6X 10 PLATED	1	1						
71	2	119600-66840	NUT, CAP	1	1						
72	2	26106-060102	BOLT, M6X 10 PLATED	4	4						
73	2	26106-060142	BOLT, M6X 14 PLATED	2	2						
74	2	26106-060202	BOLT, M6X 20 PLATED	6	6						
75	2	26756-060002	NUT, LOCK M6	2	2						
76	2	26776-120002	NUT, LOCK M12	2	2						
77	1	26366-080002	NUT, M8	1	1						
78	1	129100-61440	LEVER, CONTROL		1						
79	1	171488-61440	LEVER, CONTROL	1							
80	1	129500-61650	SPRING, FUEL CONTROL	1	1						
81	1	129477-61720	SPRING, GOVERNOR	1	1						
82	1	119653-77950	SOLENOID, STOP	1	1						
83	1	26687-120002	NUT, CAP M12	1	1						
84	1	129155-61470	BOLT, CONTROL	1	1						
85	1	124756-67510	RETAINER	1	1						
86	1	22272-000070	RING, E- 7	1	1						

N:Old ←Yes/No→ New. Q:Old ←No/Yes→ New. R:Old ←Yes/Yes→ New. S:Old ←No/No→ New. W:Add. Z:Discontinued. F:Interchangeable by set. K:Q'ty Change

Remarks
(1) SELECTIVE PARTS: CERTAIN THE CLASSIFICATION MARK, THEN PLACE YOUR ORDER.(REFER TO ILLUSTRATION).
(2) SELECTIVE PARTS.
* THIS FIGURE(GOVERNOR ASSY) IS INCORPORATED IN THE FUEL INJECTION PUMP ASSY(FIG.49).

Copyright (C) YANMAR GLOBAL CS CO., LTD. All RightsReserved.

Fig.51. FUEL INJECTION VALVE

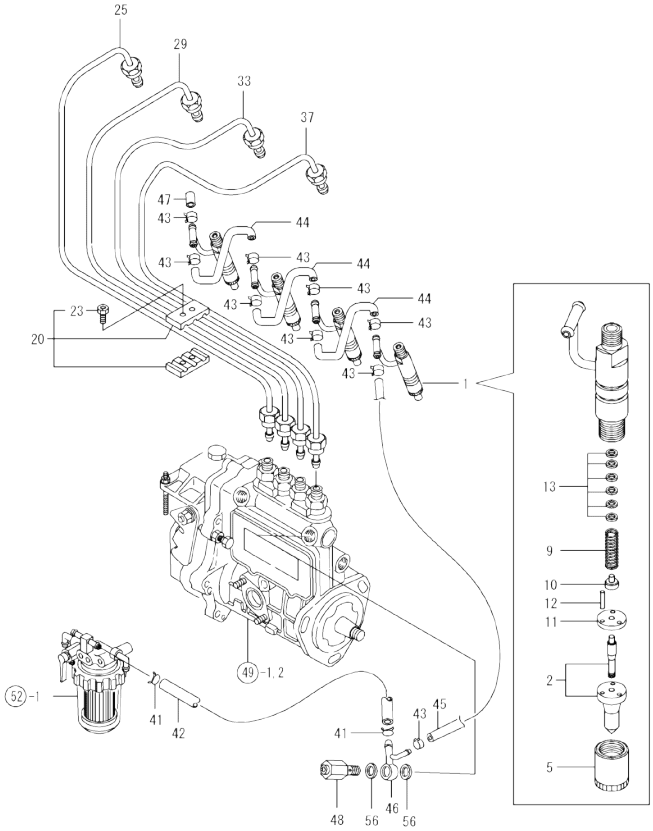

(A)=4TNE84T-GB1
(B)=4TNE84T-GB1S
(C)=
(D)=
(E)=
(F)=

No.	Lev.	Parts No.	Description	Q'ty (A)	(B)	(C)	(D)	(E)	(F)	I	R
1	1	729503-53100	VALVE ASSY,INJECTION	4	4						
2	2	129503-53000	VALVE ASSY,INJECTION	4	4						
5	2	114250-53080	NUT, NOZZLE D16.95	4	4						
9	2	114250-53120	SPRING, NOZZLE	4	4						
10	2	114250-53130	SEAT, SPRING	4	4						
11	2	114250-53140	PLATE	4	4						
12	2	114250-53210	PIN	8	8						
13	2	114250-53400	SHIM SET	4	4						
20	1	129150-59120	RETAINER, PIPE	2	2						
23	2	129150-59131	BOLT, M4X14	4	4						
25	1	129420-59910	PIPE ASSY, INJECTION	1	1						
29	1	129420-59920	PIPE ASSY, INJECTION	1	1						
33	1	129420-59930	PIPE ASSY, INJECTION	1	1						
37	1	129420-59940	PIPE ASSY, INJECTION	1	1						
41	1	124766-59050	CLIP, HOSE 12	2	2						
42	1	105025-59530	PIPE, FUEL D13X400	1	1						
43	1	124066-59100	CLIP, HOSE 8	9	9						
44	1	121250-59550	PIPE, FUEL D8X120	3	3						
45	1	119840-59560	PIPE, FUEL RETURN	1	1						
46	1	119840-59570	JOINT	1	1						
47	1	129150-59580	CAP	1	1						
48	1	129100-59951	VALVE ASSY, CHECK	1	1						
56	1	23414-120000	GASKET, 12X1.0	2	2						

N:Old ←Yes/No→ New. Q:Old ←No/Yes→ New, R:Old ←Yes/Yes→ New, S:Old ←No/No→ New, W:Add, Z:Discontinued, F:Interchangeable by set, K:Q'ty Change

Copyright (C) YANMAR GLOBAL CS CO., LTD. All RightsReserved.

Fig.52. FUEL LINE

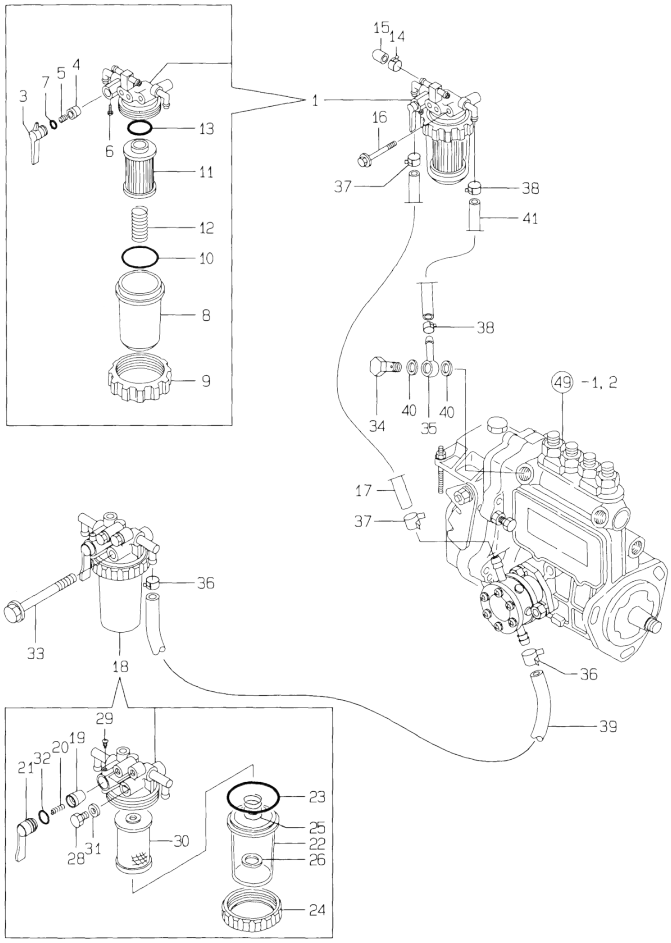

(A)=4TNE84T-GB1
(B)=4TNE84T-GB1S
(C)=
(D)=
(E)=
(F)=

No.	Lev.	Parts No.	Description	Q'ty (A)	(B)	(C)	(D)	(E)	(F)	I	R
1	1	129100-55621	FILTER ASSY, FUEL	1	1						
3	2	129100-55670	LEVER	1	1						
4	2	104200-55321	VALVE, TAPER	1	1						
5	2	104200-55330	SPRING, VALVE	1	1						
6	2	104200-55750	SCREW, M4	1	1						
7	2	24311-240100	O-RING, 1AP10A	1	1						
8	2	129100-55680	CUP, STRAINER	1	1						
9	2	129100-55690	RING, RETAINING	1	1						
10	2	24321-000650	O-RING, 1AG65.0	1	1						
11	2	129100-55650	ELEMENT	1	1						
12	2	129100-55700	SPRING	1	1						
13	2	24311-000160	O-RING, 1AP16.0	1	1						
14	1	124066-59100	CLIP, HOSE 8	1	1						
15	1	129150-59580	CAP	1	1						
16	1	26014-080702	BOLT, M8X 70	1	1						
17	1	105025-59530	PIPE, FUEL D13X400	1	1						
18	1	129335-55700	SEPARATOR ASSY,WATER	1	1						
19	2	104200-55321	VALVE, TAPER	1	1						
20	2	104200-55330	SPRING, VALVE	1	1						
21	2	104200-55341	HANDLE	1	1						
22	2	124064-55510	COVER	1	1						
23	2	102103-55520	O-RING	1	1						
24	2	110250-55610	RING, RETAINING	1	1						
25	2	121257-55720	SPRING	1	1						
26	2	121257-55731	FLOAT	1	1						
28	2	101720-55750	PLUG, 6	2	2						
29	2	104200-55750	SCREW, M4	1	1						
30	2	171081-55910	SCREEN	1	1						
31	2	23418-060000	GASKET, 6X1.0	2	2						
32	2	24311-240100	O-RING, 1AP10A	1	1						
33	1	26014-080702	BOLT, M8X 70	1	1						
34	1	103854-39140	BOLT, PIPE JOINT	1	1						
35	1	101304-59020	JOINT, PIPE 12	1	1						
36	1	124766-59050	CLIP, HOSE 12	2	2						
37	1	124766-59050	CLIP, HOSE 12	2	2						
38	1	124766-59050	CLIP, HOSE 12	2	2						
39	1	105025-59510	PIPE, FUEL	1	1						
40	1	22190-120002	WASHER, SEAL 12	2	2						
41	1	129555-59510	PIPE, D13/7.5X180	1	1						

N:Old ◄Yes/No► New. Q:Old ◄No/Yes► New. R:Old ◄Yes/Yes► New. S:Old ◄No/No► New. W:Add. Z:Discontinued. F:Interchangeable by set. K:Q'ty Change

Copyright (C) YANMAR GLOBAL CS CO., LTD. All RightsReserved.

Fig.53. STARTING MOTOR

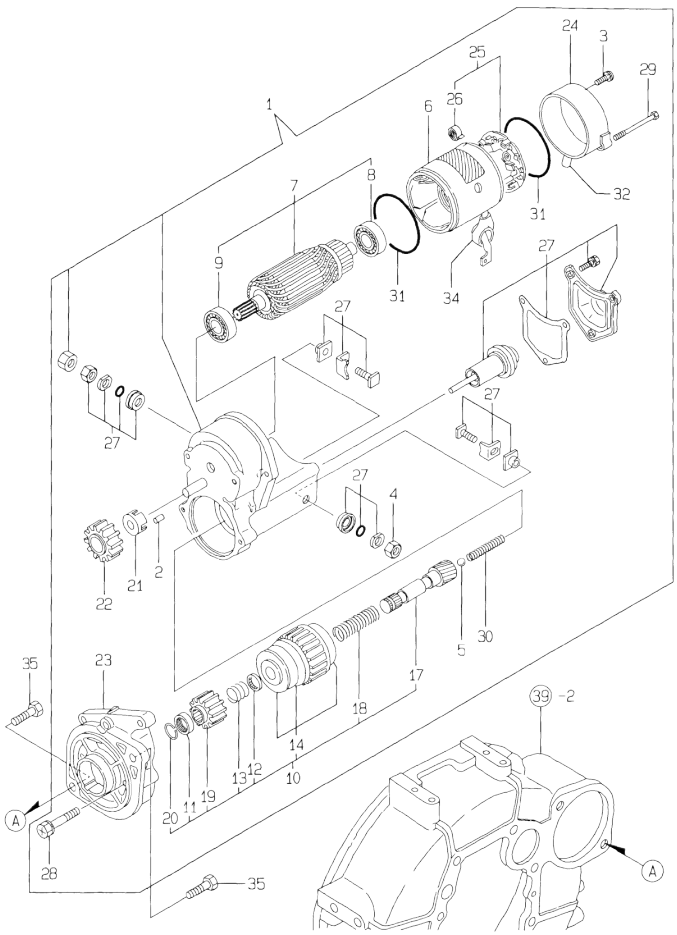

(A)=4TNE84T-GB1
(B)=4TNE84T-GB1S
(C)=
(D)=
(E)=
(F)=

No.	Lev.	Parts No.	Description	Q'ty (A)	(B)	(C)	(D)	(E)	(F)	I	R
1	1	129407-77010	STARTER, RA1.4	1	1						
2	2	X0283060061	ROLLER	5	5						
3	2	129129-77460	SCREW	2	2						
4	2	X9490561370	NUT	1	1						
5	2	X9491200240	BALL	1	1						
6	2	129407-77210	YOKE ASSY	1	1						
7	2	129407-77220	ARMATURE ASSY	1	1						
8	3	129129-77230	BEARING	1	1						
9	3	129129-77240	BEARING	1	1						
10	2	129407-77250	STARTER	1	1						
11	3	X0280210230	NUT	1	1						
12	3	X0283270140	RETAINER	1	1						
13	3	129407-77410	SPRING	1	1						
14	3	129407-77390	CLUTCH ASSY	1	1						
17	3	129129-77400	SHAFT	1	1						
18	3	129129-77410	SPRING, COIL	1	1						
19	3	129129-77420	PINION, STARTER	1	1						
20	3	129129-77430	RING	1	1						
21	2	129129-77260	RETAINER	1	1						
22	2	129129-77270	PINION	1	1						
23	2	129407-77280	HOUSING	1	1						
24	2	129129-77290	FRAME	1	1						
25	2	129407-77300	HOLDER ASSY	1	1						
26	3	X9491730461	SPRING	4	4						
27	2	129407-77310	SWITCH ASSY	1	1						
28	2	129129-77320	BOLT	2	2						
29	2	129407-77330	BOLT	2	2						
30	2	129129-77340	SPRING	1	1						
31	2	129129-77350	O-RING	2	2						
32	2	129129-77362	COVER	1	1						
34	2	129129-77380	CAP	1	1						
35	1	26116-120252	BOLT, M12X 25 PLATED	2	2						

N:Old ◄Yes/No► New. Q:Old ◄No/Yes► New. R:Old ◄Yes/Yes► New. S:Old ◄No/No► New. W:Add. Z:Discontinued. F:Interchangeable by set. K:Q'ty Change

Copyright (C) YANMAR GLOBAL CS CO., LTD. All RightsReserved.

Fig.54. GENERATOR

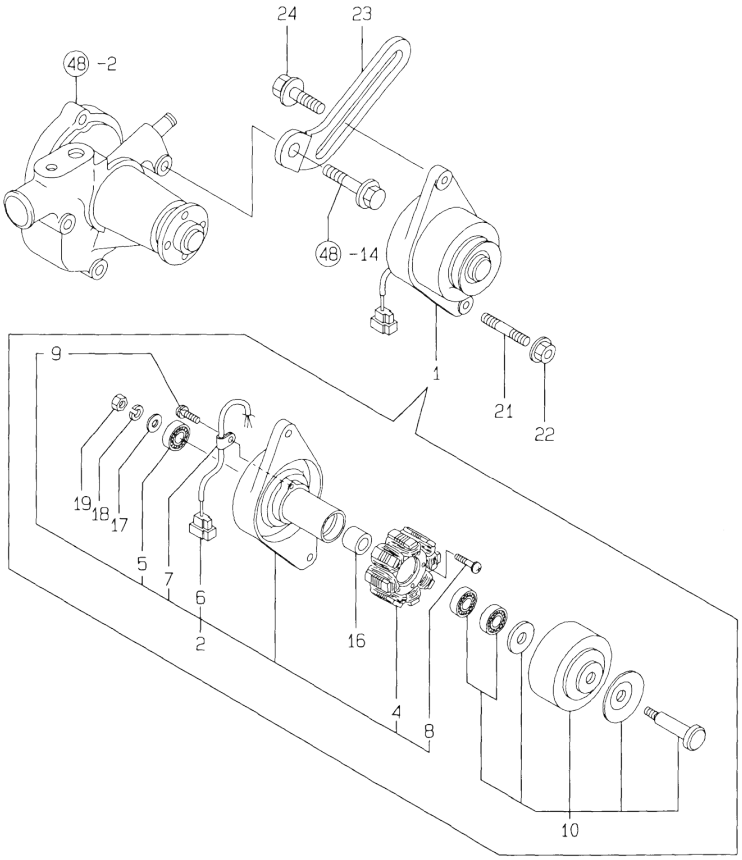

(A)=4TNE84T-GB1
(B)=4TNE84T-GB1S
(C)=
(D)=
(E)=
(F)=

No.	Lev.	Parts No.	Description	Q'ty (A)	(B)	(C)	(D)	(E)	(F)	I	R
1	1	171301-77201	DYNAMO ASSY, 15A	1	1						
2	2	XM08137	PLATE ASSY	1	1						
4	3	XM08180	STATOR SET	1	1						
5	3	XM27436	BEARING, BALL	1	1						
6	3	XM17878	COUPLER	1	1						
7	3	XM36410	CLAMP	1	1						
8	3	26022-040252	SCREW, M4X25	2	2						
9	3	XYSPS4008	SCREW	1	1						
10	2	XM82184	FLYWHEEL ASSY	1	1						
16	2	106383-44720	SPACER	1	1						
17	2	106383-44730	WASHER	1	1						
18	2	22212-100000	SPRING WASHER 10	1	1						
19	2	26716-100002	NUT, M10	1	1						
21	1	129795-01900	STUD	1	1						
22	1	26366-100002	NUT, M10	1	1						
23	1	129400-77330	ADJUSTER	1	1						
24	1	26014-080252	BOLT, M8X 25	1	1						

N:Old ◄Yes/No► New. Q:Old ◄No/Yes► New. R:Old ◄Yes/Yes► New. S:Old ◄No/No► New. W:Add. Z:Discontinued. F:Interchangeable by set. K:Q'ty Change

Copyright (C) YANMAR GLOBAL CS CO., LTD. All RightsReserved.

Fig.55. ELECTRICAL PARTS

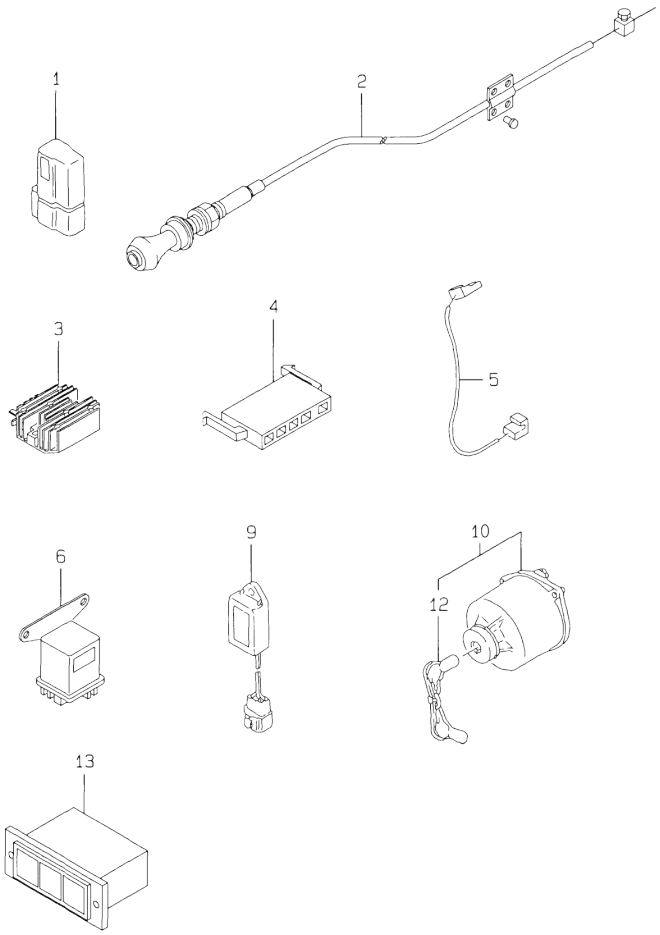

(A)=4TNE84T-GB1
(B)=4TNE84T-GB1S
(C)=
(D)=
(E)=
(F)=

No.	Lev.	Parts No.	Description	Q'ty (A)	(B)	(C)	(D)	(E)	(F)	I	R
1	1	119643-66900	DIODE	1	1						
2	1	170029-67100	CABLE, PUSH-PULL		1						
3	1	119660-77710	LIMITER, CURRENT 15A	1	1						
3-1	1	119660-77711	LIMITER, CURRENT 15A	1	1					N	
	(A=E01654)		(B=E01653)								
4	1	171301-77720	COUPLER	1	1						
5	1	119643-77900	CONNECTOR, STARTER	1	1						
6	1	119650-77910	RELAY ASSY, GLOW	1	1						
9	1	119632-77920	TIMER	1	1						
10	1	129115-91250	SWITCH ASSY	1	1						
12	2	129115-91270	KEY ASSY	1	1						
13	1	170038-91310	LAMP	1	1						

N:Old ◄Yes/No► New. Q:Old ◄No/Yes► New. R:Old ◄Yes/Yes► New. S:Old ◄No/No► New. W:Add. Z:Discontinued. F:Interchangeable by set. K:Q'ty Change

Copyright (C) YANMAR GLOBAL CS CO., LTD. All RightsReserved.

Fig.56. GASKET SET & TOOL

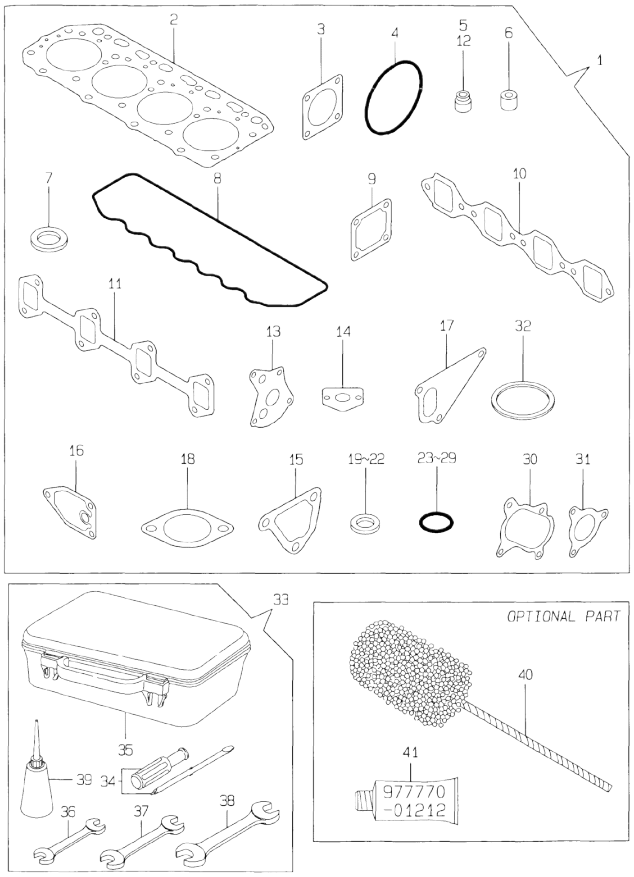

(A)=4TNE84T-GB1
(B)=4TNE84T-GB1S
(C)=
(D)=
(E)=
(F)=

No.	Lev.	Parts No.	Description	Q'ty (A)	(B)	(C)	(D)	(E)	(F)	I	R
1	1	729418-92610	GASKET SET	1	1						1
2	2	129408-01330	GASKET, HEAD	1	1						
3	2	124240-01883	GASKET	1	1						
4	2	121850-51960	O-RING	1	1						
5	2	124460-11340	SEAL, VALVE STEM	4	4						
6	2	119625-11871	PROTECTOR, NOZZLE	4	4						
7	2	119625-11880	SEAT, NOZZLE	4	4						
8	2	129550-11310	GASKET, BONNET	1	1						
9	2	129150-77511	GASKET	1	1						
10	2	129550-12111	GASKET, MANIFOLD	1	1						
11	2	129550-13110	GASKET	1	1						
12	2	121400-11340	SEAL, VALVE STEM	4	4						
13	2	129150-32020	GASKET, PUMP	1	1						
14	2	129150-35041	GASKET	1	1						
15	2	129100-49840	GASKET	1	1						
16	2	129150-35111	GASKET	1	1						
17	2	129100-42020	GASKET, WATER PUMP	1	1						
18	2	129795-49551	GASKET	1	1						
19	2	124465-44950	GASKET, 16	2	2						
20	2	23414-120000	GASKET, 12X1.0	2	2						
21	2	23414-080000	GASKET, 8X1.0	2	2						
22	2	23414-100000	GASKET, 10X1.0	2	2						
23	2	24311-000120	O-RING, 1AP12.0	3	3						
24	2	24311-000160	O-RING, 1AP16.0	3	3						
25	2	24314-000160	O-RING, 4CP16.0	1	1						
26	2	24311-000320	O-RING, 1AP32.0	1	1						
27	2	24311-000320	O-RING, 1AP32.0	1	1						
28	2	24341-000500	O-RING, 1AS50.0	1	1						
29	2	24341-000240	O-RING, 1AS24.0	1	1						
30	2	129403-18091	GASKET	1	1						
31	2	129477-18101	GASKET	1	1						
32	2	129150-49811	GASKET, THERMOSTAT	1	1						
33	1	721400-92102	BOX ASSY, TOOL	1	1						
34	2	104200-92350	DRIVER, SCREW	1	1						
35	2	104200-92600	BOX, TOOL	1	1						
36	2	28110-100120	SPANNER, 10X12	1	1						
37	2	28110-140170	SPANNER, 14X17	1	1						
38	2	28110-190220	SPANNER, 19X22	1	1						
39	2	28210-000140	OILER	1	1						
40	1	129400-92420	HONE	1	1						1
41	1	977770-01212	GASKET, LIQUID	1	1						1

Remarks
(1) OPTIONAL PART.

N:Old ←Yes/No→ New. Q:Old ←No/Yes→ New. R:Old ←Yes/Yes→ New. S:Old ←No/No→ New. W:Add. Z:Discontinued. F:Interchangeable by set. K:Q'ty Change

Copyright (C) YANMAR GLOBAL CS CO., LTD. All RightsReserved.

Fig.57. GENERATOR

(A)=YEG15TL
(B)=YEG20TL
(C)=YEG30TL
(D)=
(E)=
(F)=

No.	Lev.	Parts No.	Description	Q'ty (A)	(B)	(C)	(D)	(E)	(F)	I	R
1	1	982117-80172	GENERATOR ASSY	1							
2	1	982117-80173	GENERATOR ASSY	1							
3	1	982117-80174	GENERATOR ASSY	1							
4	1	982117-80175	GENERATOR ASSY	1							
5	1	982117-80176	GENERATOR ASSY	1							
6	1	982117-80177	GENERATOR ASSY	1							
7	1	982117-80178	GENERATOR ASSY	1							
8	1	982117-80179	GENERATOR ASSY	1							
9	1	982117-80180	GENERATOR ASSY	1							
10	1	982117-80181	GENERATOR ASSY		1						
11	1	982117-80182	GENERATOR ASSY		1						
12	1	982117-80183	GENERATOR ASSY		1						
13	1	982117-80184	GENERATOR ASSY		1						
14	1	982117-80185	GENERATOR ASSY		1						
15	1	982117-80186	GENERATOR ASSY		1						
16	1	982117-80187	GENERATOR ASSY		1						
17	1	982117-80188	GENERATOR ASSY		1						
18	1	982117-80189	GENERATOR ASSY		1						
19	1	982117-80190	GENERATOR ASSY			1					
20	1	982117-80191	GENERATOR ASSY			1					
21	1	982117-80192	GENERATOR ASSY			1					
22	1	982117-80193	GENERATOR ASSY			1					
23	1	982117-80194	GENERATOR ASSY			1					
24	1	982117-80195	GENERATOR ASSY			1					
25	1	982117-80196	GENERATOR ASSY			1					
26	1	982117-80197	GENERATOR ASSY			1					
27	1	982117-80198	GENERATOR ASSY			1					
28	2	982112-20160	GUIDE	1	1	1					
29	2	982174-83110	STATOR SET	1							
30	2	982174-83120	STATOR SET	1							
31	2	982174-83130	STATOR SET	1							
32	2	982174-83140	STATOR SET	1							
33	2	982174-83150	STATOR SET	1							
34	2	982174-83160	STATOR SET	1							
35	2	982174-83170	STATOR SET	1							
36	2	982174-83180	STATOR SET	1							
37	2	982174-83190	STATOR SET	1							
38	2	982174-83200	STATOR SET		1						
39	2	982174-83210	STATOR SET		1						
40	2	982174-83220	STATOR SET		1						
41	2	982174-83230	STATOR SET		1						
42	2	982174-83240	STATOR SET		1						
43	2	982174-83250	STATOR SET		1						
44	2	982174-83260	STATOR SET		1						
45	2	982174-83270	STATOR SET		1						
46	2	982174-83280	STATOR SET		1						
47	2	982174-83290	STATOR SET			1					
48	2	982174-83300	STATOR SET			1					
49	2	982174-83310	STATOR SET			1					
50	2	982174-83320	STATOR SET			1					
51	2	982174-83330	STATOR SET			1					

N:Old ◄Yes/No► New, Q:Old ◄No/Yes► New, R:Old ◄Yes/Yes► New, S:Old ◄No/No► New, W:Add, Z:Discontinued, F:Interchangeable by set, K:Q'ty Change

++ CONTINUE ++

Copyright (C) YANMAR GLOBAL CS CO., LTD. All RightsReserved.

Fig.57. GENERATOR

(A)=YEG15TL
(B)=YEG20TL
(C)=YEG30TL
(D)=
(E)=
(F)=

No.	Lev.	Parts No.	Description	Q'ty (A)	(B)	(C)	(D)	(E)	(F)	I	R
52	2	982174-83340	STATOR SET			1					
53	2	982174-83350	STATOR SET			1					
54	2	982174-83360	STATOR SET			1					
55	2	982174-83370	STATOR SET			1					
56	2	982190-00030	GUARD	1	1	1					
57	2	26006-102502	BOLT 10X25	8	8	8					
58	2	22217-100000	WASHER, SPRING 10	8	8	8					
59	2	982116-90570	ROTOR SET	1							
60	2	982116-90580	ROTOR SET		1						
61	2	982116-90590	ROTOR SET			1					
62	2	982117-10011	RESISTOR	1	1	1					
63	2	26557-040402	SCREW, M4X40	1	1	1					
64	2	22217-040000	WASHER, SPRING 4	1	1	1					
65	2	22117-040000	WASHER, 4	1	1	1					
66	2	982512-10040	SILICON	4	4	4					
67	2	982512-10050	SILICON	3	3	3					
68	2	982117-40010	WASHER	16	16	16					
69	2	982111-90020	CONNECTOR	6	6	6					
70	2	982110-90100	COIL, FIELD	1	1						
71	2	982110-90110	COIL, EXCITOR			1					
72	2	26116-060502	BOLT, M6X 50 PLATED	6	6						
73	2	26116-060602	BOLT, M6X 60 PLATED			6					
74	2	22217-060000	WASHER, SPRING 6	6	6	6					
75	2	22117-060000	WASHER, 6	6	6	6					
76	2	24107-063074	BEARING, BALL 6307ZZ	1	1	1					
77	2	982110-20300	BRACKET	1	1	1					
78	2	982118-10590	BOLT	4	4						
79	2	982118-10600	BOLT			4					
80	2	26716-100002	NUT, M10	8	8	8					
81	2	22217-100000	WASHER, SPRING 10	8	8	8					
82	2	982112-00130	HOUSING	1	1	1					

N:Old ◄Yes/No► New. Q:Old ◄No/Yes► New. R:Old ◄Yes/Yes► New. S:Old ◄No/No► New. W:Add. Z:Discontinued. F:Interchangeable by set. K:Q'ty Change

Copyright (C) YANMAR GLOBAL CS CO., LTD. All RightsReserved.

Fig.58. PANEL(TYPE A1,P)

(A)=YEG15TL
(B)=YEG20TL
(C)=YEG30TL
(D)=
(E)=
(F)=

No.	Lev.	Parts No.	Description	Q'ty (A)	(B)	(C)	(D)	(E)	(F)	I	R
1	1	982519-31410	PANEL	1							
2	1	982519-31420	PANEL	1							
3	1	982519-31430	PANEL	1							
4	1	982519-31440	PANEL	1							
5	1	982519-31450	PANEL	1							
6	1	982519-31460	PANEL	1							
7	1	982519-31470	PANEL	1							
8	1	982519-31480	PANEL	1							
9	1	982519-31490	PANEL	1							
10	1	982519-31500	PANEL		1						
11	1	982519-31510	PANEL		1						
12	1	982519-31520	PANEL		1						
13	1	982519-31530	PANEL		1						
14	1	982519-31540	PANEL		1						
15	1	982519-31550	PANEL		1						
16	1	982519-31560	PANEL		1						
17	1	982519-31570	PANEL		1						
18	1	982519-31580	PANEL		1						
19	1	982519-31590	PANEL			1					
20	1	982519-31600	PANEL			1					
21	1	982519-31610	PANEL			1					
22	1	982519-31620	PANEL			1					
23	1	982519-31630	PANEL			1					
24	1	982519-31640	PANEL			1					
25	1	982519-31650	PANEL			1					
26	1	982519-31660	PANEL			1					
27	1	982519-31670	PANEL			1					
28	2	982515-60040	AMMETER	1							
29	2	982515-60040	AMMETER	1							
30	2	982515-60020	AMMETER	1							
31	2	982515-60020	AMMETER	1							
32	2	982515-60020	AMMETER	1							
33	2	982515-60040	AMMETER	1							
34	2	982515-60030	AMMETER	1							
35	2	982515-60020	AMMETER	1							
36	2	982515-60020	AMMETER	1							
37	2	982515-60040	AMMETER		1						
38	2	982515-60040	AMMETER		1						
39	2	982515-60030	AMMETER		1						
40	2	982515-60030	AMMETER		1						
41	2	982515-60030	AMMETER		1						
42	2	982515-60050	AMMETER		1						
43	2	982515-60040	AMMETER		1						
44	2	982515-60030	AMMETER		1						
45	2	982515-60030	AMMETER		1						
46	2	982515-60050	AMMETER			1					
47	2	982515-60050	AMMETER			1					
48	2	982515-60040	AMMETER			1					
49	2	982515-60040	AMMETER			1					
50	2	982515-60040	AMMETER			1					
51	2	982515-60060	AMMETER			1					

N:Old $\frac{\text{Yes}}{\text{No}}$ New. Q:Old $\frac{\text{No}}{\text{Yes}}$ New. R:Old $\frac{\text{Yes}}{\text{Yes}}$ New. S:Old $\frac{\text{No}}{\text{No}}$ New. W:Add. Z:Discontinued. F:Interchangeable by set. K:Q'ty Change

++ CONTINUE ++

Copyright (C) YANMAR GLOBAL CS CO., LTD. All RightsReserved.

Fig.58. PANEL(TYPE A1,P)

(A)=YEG15TL
(B)=YEG20TL
(C)=YEG30TL
(D)=
(E)=
(F)=

No.	Lev.	Parts No.	Description	Q'ty (A)	(B)	(C)	(D)	(E)	(F)	I	R
52	2	982515-60040	AMMETER			1					
53	2	982515-60040	AMMETER			1					
54	2	982515-60040	AMMETER			1					
55	2	982510-50550	VOLTMETER	1	1	1					
56	2	982510-50540	VOLTMETER	1	1	1					
57	2	982510-80056	METER, FREQUENCY	1	1	1					
58	2	982511-60020	LAMP	1	1	1					
59	2	982511-90060	KNOB	1	1	1					
60	2	982513-80010	TERMINAL	3							
61	2	982513-80040	TERMINAL		3	3					
62	2	982513-80010	TERMINAL		3	3					
63	2	982513-80020	TERMINAL	1							
64	2	982513-80060	TERMINAL		1	1					
65	2	982513-80020	TERMINAL		1	1					
66	2	982511-00200	REGULATOR, VOLTAGE	1	1	1					
67	2	982512-50330	SWITCH	1							
68	2	982512-50260	SWITCH	1							
69	2	982512-50330	SWITCH		1						
70	2	982512-50270	SWITCH		1						
71	2	982512-50260	SWITCH		1						
72	2	982512-50270	SWITCH		1						
73	2	982512-50260	SWITCH		1						
74	2	982512-50410	SWITCH			1					
75	2	982512-50330	SWITCH			1					
76	2	982715-00060	REGULATOR, VOLTAGE	1							
77	2	982715-00061	REGULATOR, VOLTAGE	1							
78	2	982715-00064	REGULATOR, VOLTAGE	1							
79	2	982715-00065	REGULATOR, VOLTAGE	1							
80	2	982715-00066	REGULATOR, VOLTAGE	1							
81	2	982716-00061	REGULATOR, VOLTAGE	1							
82	2	982716-00064	REGULATOR, VOLTAGE	1							
83	2	982716-00067	REGULATOR, VOLTAGE	1							
84	2	982716-00068	REGULATOR, VOLTAGE	1							
85	2	982715-00070	REGULATOR, VOLTAGE		1						
86	2	982715-00071	REGULATOR, VOLTAGE		1						
87	2	982715-00074	REGULATOR, VOLTAGE		1						
88	2	982715-00075	REGULATOR, VOLTAGE		1						
89	2	982715-00076	REGULATOR, VOLTAGE		1						
90	2	982716-00071	REGULATOR, VOLTAGE		1						
91	2	982716-00074	REGULATOR, VOLTAGE		1						
92	2	982716-00077	REGULATOR, VOLTAGE		1						
93	2	982716-00078	REGULATOR, VOLTAGE		1						
94	2	982715-00080	REGULATOR, VOLTAGE			1					
95	2	982715-00081	REGULATOR, VOLTAGE			1					
96	2	982715-00084	REGULATOR, VOLTAGE			1					
97	2	982715-00085	REGULATOR, VOLTAGE			1					
98	2	982715-00086	REGULATOR, VOLTAGE			1					
99	2	982716-00081	REGULATOR, VOLTAGE			1					
100	2	982716-00084	REGULATOR, VOLTAGE			1					
101	2	982716-00087	REGULATOR, VOLTAGE			1					
102	2	982716-00088	REGULATOR, VOLTAGE			1					

N:Old ◄Yes/No► New, Q:Old ◄No/Yes► New, R:Old ◄Yes/Yes► New, S:Old ◄No/No► New, W:Add, Z:Discontinued, F:Interchangeable by set, K:Q'ty Change

++ CONTINUE ++

Copyright (C) YANMAR GLOBAL CS CO., LTD. All RightsReserved.

Fig.58. PANEL(TYPE A1,P)

(A)=YEG15TL
(B)=YEG20TL
(C)=YEG30TL
(D)=
(E)=
(F)=

No.	Lev.	Parts No.	Description	Q'ty (A)	(B)	(C)	(D)	(E)	(F)	I	R
103	2	982511-50320	TAP, TERMINAL	1	1	1					
104	2	982513-90050	TRANSFORMER	1							
105	2	982513-90050	TRANSFORMER		1						
106	2	982513-90060	TRANSFORMER		1						
107	2	982513-90050	TRANSFORMER		1						
108	2	982513-90060	TRANSFORMER			1					
109	2	982513-90070	TRANSFORMER			1					
110	2	982513-90050	TRANSFORMER			1					
111	2	170038-91310	LAMP	1	1	1					
112	2	982517-70100	SWITCH	1	1	1					
113	2	982514-10100	METER, HOUR	1	1	1					
114	2	129115-91250	SWITCH ASSY	1	1	1					
115	2	119650-77910	RELAY ASSY, GLOW	1	1	1					
116	2	119632-77920	TIMER	1	1	1					
117	2	982514-00040	RELAY	1	1	1					
118	2	119660-77710	LIMITER, CURRENT 15A	1	1	1					
119	2	982330-00480	SCREW	2	2	2					
120	2	22117-040000	WASHER, 4	4	4	4					
121	2	22217-040000	WASHER, SPRING 4	2	2	2					
122	2	26716-040002	NUT, M4	4	4	4					
123	2	982319-60160	SCREW SET	6	6	6					
124	2	982315-10430	NUT	4	4	4					
125	2	26116-050502	BOLT, M5X 50 PLATED	2	2	2					
126	2	22117-050000	WASHER, 5	4	4	4					
127	2	22217-050000	WASHER, SPRING 5	4	4	4					
128	2	26716-050002	NUT, M5	7	7	7					
129	2	982319-60180	BOLT SET	13	13	13					
130	2	982319-60080	SCREW SET	2	2	2					
131	2	26716-030002	NUT, M3	2	2	2					
132	2	982319-60140	BOLT SET	7	7	7					
133	2	26716-060002	NUT, M6	8	8	8					
134	2	22117-050000	WASHER, 5	1	1	1					
135	2	982518-60240	GUARD	1	1	1					
136	2	982518-60250	GUARD			1					
137	2	982317-00070	BOLT	2	2	2					
138	2	982515-71000	PANEL	1	1						
139	2	982515-71010	PANEL			1					
140	2	982515-71020	PANEL			1					
141	2	982515-71070	PANEL	1	1	1					
142	2	982515-71080	PANEL	1	1	1					

N:Old ◄Yes/No► New. Q:Old ◄No/Yes► New. R:Old ◄Yes/Yes► New. S:Old ◄No/No► New. W:Add. Z:Discontinued. F:Interchangeable by set. K:Q'ty Change

Copyright (C) YANMAR GLOBAL CS CO., LTD. All RightsReserved.

Fig.59. PANEL(TYPE B1)

(A)=YEG15TL
(B)=YEG20TL
(C)=YEG30TL
(D)=
(E)=
(F)=

No.	Lev.	Parts No.	Description	Q'ty (A)	(B)	(C)	(D)	(E)	(F)	I	R
1	1	982519-32090	PANEL	1							
2	1	982519-32100	PANEL ASSY	1							
3	1	982519-32110	PANEL ASSY	1							
4	1	982519-32120	PANEL ASSY	1							
5	1	982519-32130	PANEL ASSY	1							
6	1	982519-32140	PANEL ASSY	1							
7	1	982519-32150	PANEL ASSY	1							
8	1	982519-32160	PANEL ASSY	1							
9	1	982519-32170	PANEL ASSY	1							
10	1	982519-32180	PANEL ASSY		1						
11	1	982519-32190	PANEL ASSY		1						
12	1	982519-32200	PANEL ASSY		1						
13	1	982519-32210	PANEL ASSY		1						
14	1	982519-32220	PANEL ASSY		1						
15	1	982519-32230	PANEL ASSY		1						
16	1	982519-32240	PANEL ASSY		1						
17	1	982519-32250	PANEL ASSY		1						
18	1	982519-32260	PANEL ASSY		1						
19	1	982519-32270	PANEL ASSY			1					
20	1	982519-32280	PANEL ASSY			1					
21	1	982519-32290	PANEL ASSY			1					
22	1	982519-32300	PANEL ASSY			1					
23	1	982519-32310	PANEL ASSY			1					
24	1	982519-32320	PANEL ASSY			1					
25	1	982519-32330	PANEL ASSY			1					
26	1	982519-32340	PANEL ASSY			1					
27	1	982519-32350	PANEL ASSY			1					
28	2	982515-60040	AMMETER	1							
29	2	982515-60040	AMMETER	1							
30	2	982515-60020	AMMETER	1							
31	2	982515-60020	AMMETER	1							
32	2	982515-60020	AMMETER	1							
33	2	982515-60040	AMMETER	1							
34	2	982515-60030	AMMETER	1							
35	2	982515-60020	AMMETER	1							
36	2	982515-60020	AMMETER	1							
37	2	982515-60040	AMMETER		1						
38	2	982515-60040	AMMETER		1						
39	2	982515-60030	AMMETER		1						
40	2	982515-60030	AMMETER		1						
41	2	982515-60030	AMMETER		1						
42	2	982515-60050	AMMETER		1						
43	2	982515-60040	AMMETER		1						
44	2	982515-60030	AMMETER		1						
45	2	982515-60030	AMMETER		1						
46	2	982515-60050	AMMETER			1					
47	2	982515-60050	AMMETER			1					
48	2	982515-60040	AMMETER			1					
49	2	982515-60040	AMMETER			1					
50	2	982515-60040	AMMETER			1					
51	2	982515-60060	AMMETER			1					

N:Old $\frac{\text{Yes}}{\text{No}}$ New, Q:Old $\frac{\text{No}}{\text{Yes}}$ New, R:Old $\frac{\text{Yes}}{\text{Yes}}$ New, S:Old $\frac{\text{No}}{\text{No}}$ New, W:Add, Z:Discontinued, F:Interchangeable by set, K:Q'ty Change

++ CONTINUE ++

Copyright (C) YANMAR GLOBAL CS CO., LTD. All RightsReserved.

Fig.59. PANEL(TYPE B1)

(A)=YEG15TL
(B)=YEG20TL
(C)=YEG30TL
(D)=
(E)=
(F)=

No.	Lev.	Parts No.	Description	Q'ty (A)	(B)	(C)	(D)	(E)	(F)	I	R
52	2	982515-60040	AMMETER			1					
53	2	982515-60040	AMMETER			1					
54	2	982515-60040	AMMETER			1					
55	2	982510-50550	VOLTMETER	1	1	1					
56	2	982510-50540	VOLTMETER	1	1	1					
57	2	982510-80056	METER, FREQUENCY	1	1	1					
58	2	982511-60020	LAMP	1	1	1					
59	2	982511-90060	KNOB	1	1	1					
60	2	982513-80010	TERMINAL	3							
61	2	982513-80040	TERMINAL		3	3					
62	2	982513-80010	TERMINAL		3	3					
63	2	982513-80020	TERMINAL	1							
64	2	982513-80060	TERMINAL		1	1					
65	2	982513-80020	TERMINAL		1	1					
66	2	982511-00200	REGULATOR, VOLTAGE	1	1	1					
67	2	982512-50330	SWITCH	1							
68	2	982512-50260	SWITCH	1							
69	2	982512-50330	SWITCH		1						
70	2	982512-50270	SWITCH		1						
71	2	982512-50260	SWITCH		1						
72	2	982512-50270	SWITCH		1						
73	2	982512-50260	SWITCH		1						
74	2	982512-50410	SWITCH			1					
75	2	982512-50330	SWITCH			1					
76	2	982715-00060	REGULATOR, VOLTAGE	1							
77	2	982715-00061	REGULATOR, VOLTAGE	1							
78	2	982715-00064	REGULATOR, VOLTAGE	1							
79	2	982715-00065	REGULATOR, VOLTAGE	1							
80	2	982715-00066	REGULATOR, VOLTAGE	1							
81	2	982716-00061	REGULATOR, VOLTAGE	1							
82	2	982716-00064	REGULATOR, VOLTAGE	1							
83	2	982716-00067	REGULATOR, VOLTAGE	1							
84	2	982716-00068	REGULATOR, VOLTAGE	1							
85	2	982715-00070	REGULATOR, VOLTAGE		1						
86	2	982715-00071	REGULATOR, VOLTAGE		1						
87	2	982715-00074	REGULATOR, VOLTAGE		1						
88	2	982715-00075	REGULATOR, VOLTAGE		1						
89	2	982715-00076	REGULATOR, VOLTAGE		1						
90	2	982716-00071	REGULATOR, VOLTAGE		1						
91	2	982716-00074	REGULATOR, VOLTAGE		1						
92	2	982716-00077	REGULATOR, VOLTAGE		1						
93	2	982716-00078	REGULATOR, VOLTAGE		1						
94	2	982715-00080	REGULATOR, VOLTAGE			1					
95	2	982715-00081	REGULATOR, VOLTAGE			1					
96	2	982715-00084	REGULATOR, VOLTAGE			1					
97	2	982715-00085	REGULATOR, VOLTAGE			1					
98	2	982715-00086	REGULATOR, VOLTAGE			1					
99	2	982716-00081	REGULATOR, VOLTAGE			1					
100	2	982716-00084	REGULATOR, VOLTAGE			1					
101	2	982716-00087	REGULATOR, VOLTAGE			1					
102	2	982716-00088	REGULATOR, VOLTAGE			1					

N:Old ◄Yes/No► New. Q:Old ◄No/Yes► New. R:Old ◄Yes/Yes► New. S:Old ◄No/No► New. W:Add. Z:Discontinued. F:Interchangeable by set. K:Q'ty Change

++ CONTINUE ++

Copyright (C) YANMAR GLOBAL CS CO., LTD. All RightsReserved.

Fig.59. PANEL(TYPE B1)

(A)=YEG15TL
(B)=YEG20TL
(C)=YEG30TL
(D)=
(E)=
(F)=

No.	Lev.	Parts No.	Description	Q'ty (A)	(B)	(C)	(D)	(E)	(F)	I	R
103	2	982511-50320	TAP, TERMINAL	1	1	1					
104	2	982513-90050	TRANSFORMER	1							
105	2	982513-90050	TRANSFORMER		1						
106	2	982513-90060	TRANSFORMER		1						
107	2	982513-90050	TRANSFORMER		1						
108	2	982513-90060	TRANSFORMER			1					
109	2	982513-90070	TRANSFORMER			1					
110	2	982513-90050	TRANSFORMER			1					
111	2	170038-91310	LAMP	1	1	1					
112	2	982517-70100	SWITCH	1	1	1					
113	2	982514-10100	METER, HOUR	1	1	1					
114	2	129115-91250	SWITCH ASSY	1	1	1					
115	2	119650-77910	RELAY ASSY, GLOW	1	1	1					
116	2	119632-77920	TIMER	1	1	1					
117	2	982514-00040	RELAY	1	1	1					
118	2	119660-77710	LIMITER, CURRENT 15A	1	1	1					
119	2	982330-00480	SCREW	2	2	2					
120	2	22117-040000	WASHER, 4	4	4	4					
121	2	22217-040000	WASHER, SPRING 4	2	2	2					
122	2	26716-040002	NUT, M4	4	4	4					
123	2	982319-60160	SCREW SET	6	6	6					
124	2	982315-10430	NUT	4	4	4					
125	2	26116-050502	BOLT, M5X 50 PLATED	2	2	2					
126	2	22117-050000	WASHER, 5	4	4	4					
127	2	22217-050000	WASHER, SPRING 5	4	4	4					
128	2	26716-050002	NUT, M5	7	7	7					
129	2	982319-60180	BOLT SET	2	2	2					
130	2	982319-60080	SCREW SET	2	2	2					
131	2	26716-030002	NUT, M3	2	2	2					
132	2	982319-60140	BOLT SET	7	7	7					
133	2	26716-060002	NUT, M6	8	8	8					
134	2	22117-060000	WASHER, 6	1	1	1					
135	2	982518-60240	GUARD	1	1	1					
136	2	982518-60250	GUARD			1					
137	2	982317-00070	BOLT	2	2	2					
138	2	982515-71090	PANEL	1	1						
139	2	982515-71100	PANEL			1					
140	2	982515-71110	PANEL			1					
141	2	982515-71160	PANEL	1	1	1					
142	2	982319-60130	BOLT SET	4	4	4					
143	2	982319-60150	BOLT SET	4	4	4					
144	2	26716-080002	NUT, M8	4	4	4					

N:Old $\frac{\text{Yes}}{\text{No}}$ New. Q:Old $\frac{\text{No}}{\text{Yes}}$ New. R:Old $\frac{\text{Yes}}{\text{Yes}}$ New. S:Old $\frac{\text{No}}{\text{No}}$ New. W:Add. Z:Discontinued. F:Interchangeable by set. K:Q'ty Change

Copyright (C) YANMAR GLOBAL CS CO., LTD. All RightsReserved.

Fig.60. PANEL(TYPE BS)

(A)=YEG15TL
(B)=YEG20TL
(C)=YEG30TL
(D)=
(E)=
(F)=

No.	Lev.	Parts No.	Description	Q'ty (A)	(B)	(C)	(D)	(E)	(F)	I	R
1	1	982519-32770	PANEL ASSY	1							
2	1	982519-32780	PANEL ASSY	1							
3	1	982519-32790	PANEL ASSY	1							
4	1	982519-32800	PANEL ASSY	1							
5	1	982519-32810	PANEL ASSY	1							
6	1	982519-32820	PANEL ASSY	1							
7	1	982519-32830	PANEL ASSY	1							
8	1	982519-32840	PANEL ASSY	1							
9	1	982519-32850	PANEL ASSY	1							
10	1	982519-32860	PANEL ASSY		1						
11	1	982519-32870	PANEL ASSY		1						
12	1	982519-32880	PANEL ASSY		1						
13	1	982519-32890	PANEL ASSY		1						
14	1	982519-32900	PANEL ASSY		1						
15	1	982519-32910	PANEL ASSY		1						
16	1	982519-32920	PANEL ASSY		1						
17	1	982519-32930	PANEL ASSY		1						
18	1	982519-32940	PANEL ASSY		1						
19	1	982519-32950	PANEL ASSY			1					
20	1	982519-32960	PANEL ASSY			1					
21	1	982519-32970	PANEL ASSY			1					
22	1	982519-32980	PANEL ASSY			1					
23	1	982519-32990	PANEL ASSY			1					
24	1	982519-33000	PANEL ASSY			1					
25	1	982519-33010	PANEL ASSY			1					
26	1	982519-33020	PANEL ASSY			1					
27	1	982519-33030	PANEL ASSY			1					
28	2	982515-60040	AMMETER	1							
29	2	982515-60040	AMMETER	1							
30	2	982515-60020	AMMETER	1							
31	2	982515-60020	AMMETER	1							
32	2	982515-60020	AMMETER	1							
33	2	982515-60040	AMMETER	1							
34	2	982515-60030	AMMETER	1							
35	2	982515-60020	AMMETER	1							
36	2	982515-60020	AMMETER	1							
37	2	982515-60040	AMMETER		1						
38	2	982515-60040	AMMETER		1						
39	2	982515-60030	AMMETER		1						
40	2	982515-60030	AMMETER		1						
41	2	982515-60030	AMMETER		1						
42	2	982515-60050	AMMETER		1						
43	2	982515-60040	AMMETER		1						
44	2	982515-60030	AMMETER		1						
45	2	982515-60030	AMMETER		1						
46	2	982515-60050	AMMETER			1					
47	2	982515-60050	AMMETER			1					
48	2	982515-60040	AMMETER			1					
49	2	982515-60040	AMMETER			1					
50	2	982515-60040	AMMETER			1					
51	2	982515-60060	AMMETER			1					

N:Old $\frac{\text{Yes}}{\text{No}}$ New. Q:Old $\frac{\text{No}}{\text{Yes}}$ New. R:Old $\frac{\text{Yes}}{\text{Yes}}$ New. S:Old $\frac{\text{No}}{\text{No}}$ New. W:Add. Z:Discontinued. F:Interchangeable by set. K:Q'ty Change

++ CONTINUE ++

Copyright (C) YANMAR GLOBAL CS CO., LTD. All RightsReserved.

Fig.60. PANEL(TYPE BS)

(A)=YEG15TL
(B)=YEG20TL
(C)=YEG30TL
(D)=
(E)=
(F)=

No.	Lev.	Parts No.	Description	Q'ty (A)	(B)	(C)	(D)	(E)	(F)	I	R
52	2	982515-60040	AMMETER			1					
53	2	982515-60040	AMMETER			1					
54	2	982515-60040	AMMETER			1					
55	2	982510-50550	VOLTMETER	1	1	1					
56	2	982510-50540	VOLTMETER	1	1	1					
57	2	982510-80056	METER, FREQUENCY	1	1	1					
58	2	982511-60020	LAMP	1	1	1					
59	2	982511-90060	KNOB	1	1	1					
60	2	982513-80010	TERMINAL	3							
61	2	982513-80040	TERMINAL		3	3					
62	2	982513-80010	TERMINAL		3	3					
63	2	982513-80020	TERMINAL	1							
64	2	982513-80060	TERMINAL		1	1					
65	2	982513-80020	TERMINAL		1	1					
66	2	982511-00200	REGULATOR, VOLTAGE	1	1	1					
67	2	982512-50330	SWITCH	1							
68	2	982512-50260	SWITCH	1							
69	2	982512-50330	SWITCH		1						
70	2	982512-50270	SWITCH		1						
71	2	982512-50260	SWITCH		1						
72	2	982512-50270	SWITCH		1						
73	2	982512-50260	SWITCH		1						
74	2	982512-50410	SWITCH			1					
75	2	982512-50330	SWITCH			1					
76	2	982715-00060	REGULATOR, VOLTAGE	1							
77	2	982715-00061	REGULATOR, VOLTAGE	1							
78	2	982715-00064	REGULATOR, VOLTAGE	1							
79	2	982715-00065	REGULATOR, VOLTAGE	1							
80	2	982715-00066	REGULATOR, VOLTAGE	1							
81	2	982716-00061	REGULATOR, VOLTAGE	1							
82	2	982716-00064	REGULATOR, VOLTAGE	1							
83	2	982716-00067	REGULATOR, VOLTAGE	1							
84	2	982716-00068	REGULATOR, VOLTAGE	1							
85	2	982715-00070	REGULATOR, VOLTAGE		1						
86	2	982715-00071	REGULATOR, VOLTAGE		1						
87	2	982715-00074	REGULATOR, VOLTAGE		1						
88	2	982715-00075	REGULATOR, VOLTAGE		1						
89	2	982715-00076	REGULATOR, VOLTAGE		1						
90	2	982716-00071	REGULATOR, VOLTAGE		1						
91	2	982716-00074	REGULATOR, VOLTAGE		1						
92	2	982716-00077	REGULATOR, VOLTAGE		1						
93	2	982716-00078	REGULATOR, VOLTAGE		1						
94	2	982715-00080	REGULATOR, VOLTAGE			1					
95	2	982715-00081	REGULATOR, VOLTAGE			1					
96	2	982715-00084	REGULATOR, VOLTAGE			1					
97	2	982715-00085	REGULATOR, VOLTAGE			1					
98	2	982715-00086	REGULATOR, VOLTAGE			1					
99	2	982716-00081	REGULATOR, VOLTAGE			1					
100	2	982716-00084	REGULATOR, VOLTAGE			1					
101	2	982716-00087	REGULATOR, VOLTAGE			1					
102	2	982716-00088	REGULATOR, VOLTAGE			1					

N:Old ◄Yes/No► New. Q:Old ◄No/Yes► New. R:Old ◄Yes/Yes► New. S:Old ◄No/No► New. W:Add. Z:Discontinued. F:Interchangeable by set. K:Q'ty Change

++ CONTINUE ++

Copyright (C) YANMAR GLOBAL CS CO., LTD. All RightsReserved.

Fig.60. PANEL(TYPE BS)

(A)=YEG15TL
(B)=YEG20TL
(C)=YEG30TL
(D)=
(E)=
(F)=

No.	Lev.	Parts No.	Description	Q'ty (A)	(B)	(C)	(D)	(E)	(F)	I	R
103	2	982511-50320	TAP, TERMINAL	1	1	1					
104	2	982513-90050	TRANSFORMER	1							
105	2	982513-90050	TRANSFORMER		1						
106	2	982513-90060	TRANSFORMER		1						
107	2	982513-90050	TRANSFORMER		1						
108	2	982513-90060	TRANSFORMER			1					
109	2	982513-90070	TRANSFORMER			1					
110	2	982513-90050	TRANSFORMER			1					
111	2	170038-91310	LAMP	1	1	1					
112	2	982517-70100	SWITCH	1	1	1					
113	2	982514-10100	METER, HOUR	1	1	1					
114	2	129115-91250	SWITCH ASSY	1	1	1					
115	2	119650-77910	RELAY ASSY, GLOW	1	1	1					
116	2	119632-77920	TIMER	1	1	1					
117	2	982514-00040	RELAY	1	1	1					
118	2	119660-77710	LIMITER, CURRENT 15A	1	1	1					
119	2	982215-00870	THROTTLE	1							
120	2	982215-00880	THROTTLE		1	1					
121	2	982319-60240	SCREW SET	2	2	2					
122	2	26716-040002	NUT, M4	4	4	4					
123	2	982319-60160	SCREW SET	6	6	6					
124	2	982315-10430	NUT	4	4	4					
125	2	26116-050502	BOLT, M5X 50 PLATED	2	2	2					
126	2	22117-050000	WASHER, 5	4	4	4					
127	2	22217-050000	WASHER, SPRING 5	4	4	4					
128	2	26716-050002	NUT, M5	11	11	11					
129	2	982319-60180	BOLT SET	14	14	14					
130	2	982319-60080	SCREW SET	2	2	2					
131	2	26716-030002	NUT, M3	10	10	10					
132	2	982319-60140	BOLT SET	7	7	7					
133	2	26716-060002	NUT, M6	8	8	8					
134	2	22117-060000	WASHER, 6	1	1	1					
135	2	982287-00210	HINGE	2	2	2					
136	2	982287-00220	BOLT	1	1	1					
137	2	982515-71160	PANEL	1	1						
138	2	982515-71170	PANEL			1					
139	2	982515-71180	PANEL			1					
140	2	982515-71230	PLATE	1	1	1					
141	2	982515-71240	PANEL	1	1						
142	2	982515-71250	PANEL			1					
143	2	982515-71260	PANEL			1					
144	2	982515-71310	PLATE	1	1	1					
145	2	982515-71320	PLATE	1	1						
146	2	982515-71330	PLATE			1					
147	2	982515-71340	PLATE			1					
148	2	982319-60150	BOLT SET	4	4	4					
149	2	26716-080002	NUT, M8	4	4	4					

N:Old ◄Yes/No► New. Q:Old ◄No/Yes► New. R:Old ◄Yes/Yes► New. S:Old ◄No/No► New. W:Add. Z:Discontinued. F:Interchangeable by set. K:Q'ty Change

Copyright (C) YANMAR GLOBAL CS CO., LTD. All RightsReserved.

Fig.61. FRAME(TYPE P)

(A)=YEG15TL
(B)=YEG20TL
(C)=YEG30TL
(D)=
(E)=
(F)=

No.	Lev.	Parts No.	Description	Q'ty (A)	(B)	(C)	(D)	(E)	(F)	I	R
1	1	982210-40750	FRAME	1							
2	1	982210-40760	FRAME		1						
3	1	982210-40770	FRAME			1					
4	1	982247-00200	MOUNT, ENGINE	1	1	1					
5	1	982247-00220	MOUNT, ENGINE	1	1	1					
6	1	982219-00580	RUBBER,CUSHION	4	4	4					
7	1	26116-120752	BOLT, M12X 75 PLATED	2	2	2					
8	1	22117-120000	WASHER, 12	2	2	2					
9	1	22217-120000	WASHER, SPRING 12	2	2	2					
10	1	26716-120002	NUT, M12	4	4	4					
11	1	982319-60250	BOLT SET	8	8	8					
12	1	22217-100000	WASHER, SPRING 10	24	24	24					
13	1	982298-20010	PLATE	1	1						
14	1	982298-20020	BRACKET, RESERVOIR			1					
15	1	982319-60140	BOLT SET	2	2	2					
16	1	26716-060002	NUT, M6	2	2	2					
17	1	26116-080252	BOLT, M8X 25 PLATED	4	4	4					
18	1	26716-080002	NUT, M8	8	8	12					
19	1	982217-90640	TANK, FUEL	1							
20	1	982217-90650	TANK, FUEL		1	1					
21	1	982217-90660	CAP	1	1	1					
22	1	982218-00140	BAND, TANK	2							
23	1	982218-00230	BAND, TANK		2	2					
24	1	22217-080000	WASHER, SPRING 8	4	4	4					
25	1	982283-00700	HOSE	1							
26	1	982283-00720	HOSE		1	1					
27	1	982283-00710	HOSE	1							
28	1	982283-00730	HOSE		1	1					
29	1	982284-00080	CLAMP	4	4	4					
30	1	982217-00040	BATTERY	1	1	1					
31	1	982212-30070	CLAMP	1	1	1					
32	1	982212-30080	BOLT	2	2	2					
33	1	982317-00070	BOLT	2	2	2					
34	1	129150-49170	COOK ASSY	1	1	1					
35	1	982283-00760	HOSE	1	1	1					
36	1	982283-00790	HOSE	1	1	1					
37	1	982284-00016	CLAMP	4	4	4					
38	1	982219-10050	WHEEL	2	2	2					
39	1	982219-10070	CASTER	2	2	2					
40	1	26116-100202	BOLT, M10X 20 PLATED	16	16	16					
41	1	26716-100002	NUT, M10	16	16	16					

N:Old ◄Yes/No► New. Q:Old ◄No/Yes► New. R:Old ◄Yes/Yes► New. S:Old ◄No/No► New. W:Add. Z:Discontinued. F:Interchangeable by set. K:Q'ty Change

Copyright (C) YANMAR GLOBAL CS CO., LTD. All RightsReserved.

Fig.62. FRAME(TYPE A1)

(A)=YEG15TL
(B)=YEG20TL
(C)=YEG30TL
(D)=
(E)=
(F)=

No.	Lev.	Parts No.	Description	Q'ty (A)	(B)	(C)	(D)	(E)	(F)	I	R
1	1	982210-40830	BED, COMMON	1							
2	1	982210-40840	BED, COMMON		1						
3	1	982210-40850	BED, COMMON			1					
4	1	982210-40870	PANEL, MOUNT	1							
5	1	982210-40880	PANEL, MOUNT		1	1					
6	1	982247-00240	MOUNT, ENGINE	2	2	2					
7	1	982219-00580	RUBBER,CUSHION	4	4	4					
8	1	26116-100250	BOLT 10X 25	8	8	8					
9	1	22217-100000	WASHER, SPRING 10	12	12	12					
10	1	982298-20010	PLATE	1	1						
11	1	982298-20020	BRACKET, RESERVOIR			1					
12	1	982319-60140	BOLT SET	2	2	2					
13	1	26716-060002	NUT, M6	6	6	6					
14	1	982319-60250	BOLT SET	4	4	4					
15	1	26716-080002	NUT, M8	8	8	12					
16	1	982217-90640	TANK, FUEL	1							
17	1	982217-90650	TANK, FUEL		1	1					
18	1	982217-90660	CAP	1	1	1					
19	1	982218-00140	BAND, TANK	2							
20	1	982218-00230	BAND, TANK		2	2					
21	1	22217-080000	WASHER, SPRING 8	4	4	4					
22	1	982283-00700	HOSE	1							
23	1	982283-00720	HOSE		1	1					
24	1	982283-00710	HOSE	1							
25	1	982283-00730	HOSE		1	1					
26	1	982284-00080	CLAMP	4	4	4					
27	1	26116-100302	BOLT, M10X 30 PLATED	4	4	4					
28	1	26716-100002	NUT, M10	4	4	4					
29	1	982217-00040	BATTERY	1	1	1					
30	1	982212-30070	CLAMP	1	1	1					
31	1	982212-30080	BOLT	2	2	2					
32	1	22117-060000	WASHER, 6	2	2	2					
33	1	129150-49100	COCK ASSY, 3-WAY	1	1	1					
34	1	982283-00800	HOSE	1	1	1					
35	1	982283-00830	HOSE	1	1	1					
36	1	982284-00016	CLAMP	4	4	4					

N:Old ◄Yes/No► New. Q:Old ◄No/Yes► New. R:Old ◄Yes/Yes► New. S:Old ◄No/No► New. W:Add. Z:Discontinued. F:Interchangeable by set. K:Q'ty Change

Copyright (C) YANMAR GLOBAL CS CO., LTD. All RightsReserved.

Fig.63. BONNET(TYPE B1)

(A)=YEG15TL
(B)=YEG20TL
(C)=YEG30TL
(D)=
(E)=
(F)=

No.	Lev.	Parts No.	Description	Q'ty (A)	(B)	(C)	(D)	(E)	(F)	I	R
1	1	982215-20466	BED, COMMON	1							
2	1	982215-20467	BED, COMMON		1						
3	1	982215-20468	BED, COMMON			1					
4	1	982247-00240	MOUNT, ENGINE	2	2	2					
5	1	982219-00580	RUBBER,CUSHION	4	4	4					
6	1	26116-100252	BOLT, M10X 25 PLATED	8	8	8					
7	1	22217-100000	WASHER, SPRING 10	24	24	24					
8	1	982215-20470	COVER	1	1	1					
9	1	982215-20472	COVER	1	1	1					
10	1	982215-20474	COVER	1	1	1					
11	1	982215-20485	COVER	1	1	1					
12	1	982215-20486	BOLT SET	36	36	36					
13	1	982319-60160	SCREW SET	4	4	4					
14	1	26716-040002	NUT, M4	4	4	4					
15	1	982215-20488	COVER	1							
16	1	982215-20489	COVER		1	1					
17	1	982217-90640	TANK, FUEL	1							
18	1	982217-90650	TANK, FUEL		1	1					
19	1	982217-90660	CAP	1	1	1					
20	1	982218-00250	BAND, TANK	2							
21	1	982218-00260	BAND, TANK		2	2					
22	1	982283-00700	HOSE	1							
23	1	982283-00720	HOSE		1	1					
24	1	982283-00710	HOSE	1							
25	1	982283-00730	HOSE		1	1					
26	1	982284-00080	CLAMP	4	4	4					
27	1	982319-60250	BOLT SET	8	8	8					
28	1	26716-080002	NUT, M8	13	13	13					
29	1	982215-20492	COVER	1	1						
30	1	982215-20493	COVER			1					
31	1	982217-90630	CAP	1	1	1					
32	1	982298-20010	PLATE	1	1						
33	1	982298-20020	BRACKET, RESERVOIR			1					
34	1	982319-60140	BOLT SET	2	2	2					
35	1	26716-060002	NUT, M6	2	2	2					
36	1	982215-20495	COVER	1							
37	1	982215-20496	COVER		1	1					
38	1	982319-60260	BOLT SET	6	6	6					
39	1	982215-20498	DOOR	1							
40	1	982215-20499	DOOR		1	1					
41	1	982287-00230	HANDLE	1	1	1					
42	1	982215-20500	HOLE, PEEP	1	1	1					
43	1	982215-20501	ARM	1	1	1					
44	1	982286-00060	HINGE	2	3	3					
45	1	982336-08200	SCREW	4	4	4					
46	1	22217-080000	WASHER, SPRING 8	4	4	4					
47	1	26116-080302	BOLT, M8X 30 PLATED	1	1	1					
48	1	22117-080000	WASHER, 8	1	1	1					
49	1	982319-60180	BOLT SET	6	8	8					
50	1	982332-05010	SCREW	6	9	9					
51	1	982217-00040	BATTERY	1	1	1					

N:Old ◄Yes/No► New. Q:Old ◄No/Yes► New. R:Old ◄Yes/Yes► New. S:Old ◄No/No► New. W:Add. Z:Discontinued. F:Interchangeable by set. K:Q'ty Change

++ CONTINUE ++

Copyright (C) YANMAR GLOBAL CS CO., LTD. All RightsReserved.

Fig.63. BONNET(TYPE B1)

(A)=YEG15TL
(B)=YEG20TL
(C)=YEG30TL
(D)=
(E)=
(F)=

No.	Lev.	Parts No.	Description	Q'ty (A)	(B)	(C)	(D)	(E)	(F)	I	R
52	1	982212-30070	CLAMP	1	1	1					
53	1	982212-30080	BOLT	2	2	2					
54	1	982317-00070	BOLT	2	2	2					
55	1	129150-49100	COCK ASSY, 3-WAY	1	1	1					
56	1	982283-00840	HOSE	1	1	1					
57	1	982283-00870	HOSE	1	1	1					
58	1	982284-00016	CLAMP	4	4	4					
59	1	982217-30260	DRAIN, OIL	1	1	1					
60	1	982217-30420	JOINT	1	1	1					
61	1	982283-00680	HOSE	1	1	1					
62	1	982284-00025	CLIP	2	2	2					
63	1	26716-050002	NUT, M5	2	2	2					
64	1	982219-10050	WHEEL	2	2	2					
65	1	982219-10070	CASTER	2	2	2					
66	1	26116-100202	BOLT, M10X 20 PLATED	16	16	16					
67	1	26716-100002	NUT, M10	16	16	16					
68	1	982217-90620	CAP	1	1	1					

N:Old ◄Yes/No► New. Q:Old ◄No/Yes► New. R:Old ◄Yes/Yes► New. S:Old ◄No/No► New. W:Add. Z:Discontinued. F:Interchangeable by set. K:Q'ty Change

Copyright (C) YANMAR GLOBAL CS CO., LTD. All RightsReserved.

Fig.64. BONNET(TYPE BS)

(A)=YEG15TL
(B)=YEG20TL
(C)=YEG30TL
(D)=
(E)=
(F)=

No.	Lev.	Parts No.	Description	Q'ty (A)	(B)	(C)	(D)	(E)	(F)	I	R
1	1	982215-20534	BED, COMMON	1							
2	1	982215-20535	BED, COMMON		1						
3	1	982215-20536	BED, COMMON			1					
4	1	982247-00240	MOUNT, ENGINE	2	2	2					
5	1	982219-00580	RUBBER,CUSHION	4	4	4					
6	1	26116-100252	BOLT, M10X 25 PLATED	8	8	8					
7	1	22217-100000	WASHER, SPRING 10	24	24	24					
8	1	982215-20537	DUCT	1							
9	1	982215-20538	DUCT		1	1					
10	1	982215-20539	DUCT	1							
11	1	982215-20540	DUCT		1	1					
12	1	982319-60150	BOLT SET	45	45	45					
13	1	982319-60180	BOLT SET	43	43	43					
14	1	982215-20541	COVER	1	1	1					
15	1	982215-20542	PLATE	1	1	1					
16	1	982215-20543	COVER	1	1	1					
17	1	982215-20544	DUCT	1	1	1					
18	1	982215-20545	DUCT	1	1	1					
19	1	26116-060252	BOLT, M6X 25 PLATED	2	2	2					
20	1	982287-00180	CATCH, BALL	2	2	2					
21	1	982332-54010	SCREW	8	8	8					
22	1	982215-20546	COVER	1							
23	1	982215-20547	COVER		1	1					
24	1	982215-20548	COVER	1	1						
25	1	982215-20549	SHIELD	1	1	1					
26	1	982215-20550	SHIELD	1							
27	1	982215-20551	SHIELD		1	1					
28	1	982275-00450	SILENCER	1	1	1					
29	1	982277-00100	GASKET	1	1	1					
30	1	982277-00050	CLAMP	1	1	1					
31	1	26716-080002	NUT, M8	19	19	19					
32	1	982298-20010	PLATE	1							
33	1	982298-20020	BRACKET, RESERVOIR		1	1					
34	1	982319-60140	BOLT SET	2	2	2					
35	1	26716-060002	NUT, M6	2	2	2					
36	1	982215-20552	COVER	1							
37	1	982215-20553	COVER		1	1					
38	1	982217-90630	CAP	1	1	1					
39	1	982217-90620	CAP	1	1	1					
40	1	982217-90640	TANK, FUEL	1							
41	1	982217-90650	TANK, FUEL		1	1					
42	1	982217-90660	CAP	1	1	1					
43	1	982218-00250	BAND, TANK	2							
44	1	982218-00260	BAND, TANK		2	2					
45	1	982215-20555	LIFTER	1							
46	1	982215-20556	LIFTER		1	1					
47	1	982215-20557	LIFTER	1							
48	1	982274-00310	PIPE	1	1						
49	1	982274-00330	PIPE			1					
50	1	982215-20558	LIFTER		1	1					
51	1	982215-20559	BRACKET	1							

N:Old $\frac{\text{Yes}}{\text{No}}$ New, Q:Old $\frac{\text{No}}{\text{Yes}}$ New, R:Old $\frac{\text{Yes}}{\text{Yes}}$ New, S:Old $\frac{\text{No}}{\text{No}}$ New, W:Add, Z:Discontinued, F:Interchangeable by set, K:Q'ty Change

++ CONTINUE ++

Copyright (C) YANMAR GLOBAL CS CO., LTD. All RightsReserved.

Fig.64. BONNET(TYPE BS)

(A)=YEG15TL
(B)=YEG20TL
(C)=YEG30TL
(D)=
(E)=
(F)=

No.	Lev.	Parts No.	Description	Q'ty (A)	(B)	(C)	(D)	(E)	(F)	I	R
52	1	982215-20560	BRACKET		1	1					
53	1	982215-20561	BRACKET	1							
54	1	982215-20562	BRACKET		1	1					
55	1	982319-60270	BOLT SET	4	4	4					
56	1	26716-120002	NUT, M12	4	4	4					
57	1	982283-00700	HOSE	1							
58	1	982283-00720	HOSE		1	1					
59	1	982283-00710	HOSE	1							
60	1	982283-00730	HOSE		1	1					
61	1	982284-00080	CLAMP	4	4	4					
62	1	982215-20563	COVER	1							
63	1	982215-20564	COVER		1	1					
64	1	982215-20565	DUCT	1							
65	1	982215-20566	DUCT		1	1					
66	1	982215-20567	DUCT		1	1					
67	1	982319-60260	BOLT SET	8	8	8					
68	1	982215-20568	DOOR	1							
69	1	982215-20569	DOOR		1	1					
70	1	982215-20570	DOOR	1							
71	1	982215-20571	DOOR		1	1					
72	1	982287-00230	HANDLE	1	1	1					
73	1	982215-20572	HOLE, PEEP	1	1	1					
74	1	982215-20573	DUCT	1							
75	1	982215-20574	DUCT		1	1					
76	1	982215-20575	DUCT	2							
77	1	982215-20576	DUCT		2	2					
78	1	982286-00060	HINGE	6	6	6					
79	1	982336-08200	SCREW	4	4	4					
80	1	22217-080000	WASHER, SPRING 8	4	4	4					
81	1	982332-05010	SCREW	18	18	18					
82	1	982215-20577	DOOR	1	1	1					
83	1	982215-20578	HOLE, PEEP	1	1	1					
84	1	982287-00170	HANDLE	2	2	2					
85	1	982332-56016	SCREW	6	6	6					
86	1	982242-26000	WASHER	6	6	6					
87	1	982242-46000	WASHER	6	6	6					
88	1	26713-060002	NUT, M6	6	6	6					
89	1	982217-00040	BATTERY	1	1	1					
90	1	982212-30070	CLAMP	1	1	1					
91	1	982212-30080	BOLT	2	2	2					
92	1	982317-00070	BOLT	2	2	2					
93	1	121450-49110	COCK ASSY, 3-WAY	1	1	1					
94	1	982283-00880	HOSE	1	1	1					
95	1	982283-00910	HOSE	1	1	1					
96	1	982284-00016	CLAMP	4	4	4					
97	1	982217-30260	DRAIN, OIL	1	1	1					
98	1	982217-30220	JOINT	1	1	1					
99	1	982283-00750	HOSE	1	1	1					
100	1	982284-00025	CLIP	2	2	2					
101	1	26716-050002	NUT, M5	2	2	2					
102	1	982219-10050	WHEEL	2	2	2					

N:Old ◄Yes/No► New, Q:Old ◄No/Yes► New, R:Old ◄Yes/Yes► New, S:Old ◄No/No► New, W:Add, Z:Discontinued, F:Interchangeable by set, K:Q'ty Change

++ CONTINUE ++

Copyright (C) YANMAR GLOBAL CS CO., LTD. All RightsReserved.

Fig.64. BONNET(TYPE BS)

(A)=YEG15TL
(B)=YEG20TL
(C)=YEG30TL
(D)=
(E)=
(F)=

No.	Lev.	Parts No.	Description	Q'ty (A)	(B)	(C)	(D)	(E)	(F)	I	R
103	1	982219-10070	CASTER	2	2	2					
104	1	26116-100202	BOLT, M10X 20 PLATED	16	16	16					

N:Old ◄Yes/No► New. Q:Old ◄No/Yes► New. R:Old ◄Yes/Yes► New. S:Old ◄No/No► New. W:Add. Z:Discontinued. F:Interchangeable by set. K:Q`ty Change

Copyright (C) YANMAR GLOBAL CS CO., LTD. All RightsReserved.

Fig.65. GENERATOR

(A)=YEG12SL
(B)=YEG16SL
(C)=YEG22SL
(D)=
(E)=
(F)=

No.	Lev.	Parts No.	Description	Q'ty (A)	(B)	(C)	(D)	(E)	(F)	I	R
1	1	982117-80277	GENERATOR ASSY	1							
2	1	982117-80278	GENERATOR ASSY	1							
3	1	982117-80279	GENERATOR ASSY	1							
4	1	982117-80280	GENERATOR ASSY	1							
5	1	982117-80281	GENERATOR ASSY	1							
6	1	982117-80282	GENERATOR ASSY	1							
7	1	982117-80283	GENERATOR ASSY	1							
8	1	982117-80284	GENERATOR ASSY	1							
9	1	982117-80285	GENERATOR ASSY	1							
10	1	982117-80286	GENERATOR ASSY	1							
11	1	982117-80287	GENERATOR ASSY	1							
12	1	982117-80288	GENERATOR ASSY	1							
13	1	982117-80289	GENERATOR ASSY	1							
14	1	982117-80290	GENERATOR ASSY	1							
15	1	982117-80291	GENERATOR ASSY	1							
16	1	982117-80292	GENERATOR ASSY	1							
17	1	982117-80293	GENERATOR ASSY	1							
18	1	982117-80294	GENERATOR ASSY		1						
19	1	982117-80295	GENERATOR ASSY		1						
20	1	982117-80296	GENERATOR ASSY		1						
21	1	982117-80297	GENERATOR ASSY		1						
22	1	982117-80298	GENERATOR ASSY		1						
23	1	982117-80299	GENERATOR ASSY		1						
24	1	982117-80300	GENERATOR ASSY		1						
25	1	982117-80301	GENERATOR ASSY		1						
26	1	982117-80302	GENERATOR ASSY		1						
27	1	982117-80303	GENERATOR ASSY		1						
28	1	982117-80304	GENERATOR ASSY		1						
29	1	982117-80305	GENERATOR ASSY		1						
30	1	982117-80306	GENERATOR ASSY		1						
31	1	982117-80307	GENERATOR ASSY		1						
32	1	982117-80308	GENERATOR ASSY		1						
33	1	982117-80309	GENERATOR ASSY		1						
34	1	982117-80310	GENERATOR ASSY		1						
35	1	982117-80311	GENERATOR ASSY			1					
36	1	982117-80312	GENERATOR ASSY			1					
37	1	982117-80313	GENERATOR ASSY			1					
38	1	982117-80314	GENERATOR ASSY			1					
39	1	982117-80315	GENERATOR ASSY			1					
40	1	982117-80316	GENERATOR ASSY			1					
41	1	982117-80317	GENERATOR ASSY			1					
42	1	982117-80318	GENERATOR ASSY			1					
43	1	982117-80319	GENERATOR ASSY			1					
44	1	982117-80320	GENERATOR ASSY			1					
45	1	982117-80321	GENERATOR ASSY			1					
46	1	982117-80322	GENERATOR ASSY			1					
47	1	982117-80323	GENERATOR ASSY			1					
48	1	982117-80324	GENERATOR ASSY			1					
49	1	982117-80325	GENERATOR ASSY			1					
50	1	982117-80326	GENERATOR ASSY			1					
51	1	982117-80327	GENERATOR ASSY			1					

N:Old $\xleftrightarrow[\text{No}]{\text{Yes}}$ New, Q:Old $\xleftrightarrow[\text{Yes}]{\text{No}}$ New, R:Old $\xleftrightarrow[\text{Yes}]{\text{Yes}}$ New, S:Old $\xleftrightarrow[\text{No}]{\text{No}}$ New, W:Add, Z:Discontinued, F:Interchangeable by set, K:Q'ty Change

++ CONTINUE ++

Copyright (C) YANMAR GLOBAL CS CO., LTD. All RightsReserved.

Fig.65. GENERATOR

(A)=YEG12SL
(B)=YEG16SL
(C)=YEG22SL
(D)=
(E)=
(F)=

No.	Lev.	Parts No.	Description	Q'ty (A)	(B)	(C)	(D)	(E)	(F)	I	R
52	2	982112-00130	HOUSING	1	1	1					
53	2	982112-20160	GUIDE	1	1	1					
54	2	982174-84180	STATOR SET	1							
55	2	982174-84190	STATOR SET	1							
56	2	982174-84200	STATOR SET	1							
57	2	982174-84210	STATOR SET	1							
58	2	982174-84220	STATOR SET	1							
59	2	982174-84230	STATOR SET	1							
60	2	982174-84240	STATOR SET	1							
61	2	982174-84250	STATOR SET	1							
62	2	982174-84260	STATOR SET	1							
63	2	982174-84270	STATOR SET	1							
64	2	982174-84280	STATOR SET	1							
65	2	982174-84290	STATOR SET	1							
66	2	982174-84300	STATOR SET	1							
67	2	982174-84310	STATOR SET	1							
68	2	982174-84320	STATOR SET	1							
69	2	982174-84330	STATOR SET	1							
70	2	982174-84340	STATOR SET	1							
71	2	982174-84350	STATOR SET		1						
72	2	982174-84360	STATOR SET		1						
73	2	982174-84370	STATOR SET		1						
74	2	982174-84380	STATOR SET		1						
75	2	982174-84390	STATOR SET		1						
76	2	982174-84400	STATOR SET		1						
77	2	982174-84410	STATOR SET		1						
78	2	982174-84420	STATOR SET		1						
79	2	982174-84430	STATOR SET		1						
80	2	982174-84440	STATOR SET		1						
81	2	982174-84450	STATOR SET		1						
82	2	982174-84460	STATOR SET		1						
83	2	982174-84470	STATOR SET		1						
84	2	982174-84480	STATOR SET		1						
85	2	982174-84490	STATOR SET		1						
86	2	982174-84500	STATOR SET		1						
87	2	982174-84510	STATOR SET		1						
88	2	982174-84520	STATOR SET			1					
89	2	982174-84530	STATOR SET			1					
90	2	982174-84540	STATOR SET			1					
91	2	982174-84550	STATOR SET			1					
92	2	982174-84560	STATOR SET			1					
93	2	982174-84570	STATOR SET			1					
94	2	982174-84580	STATOR SET			1					
95	2	982174-84590	STATOR SET			1					
96	2	982174-84600	STATOR SET			1					
97	2	982174-84610	STATOR SET			1					
98	2	982174-84620	STATOR SET			1					
99	2	982174-84630	STATOR SET			1					
100	2	982174-84640	STATOR SET			1					
101	2	982174-84650	STATOR SET			1					
102	2	982174-84660	STATOR SET			1					

N:Old ◄Yes/No► New. Q:Old ◄No/Yes► New. R:Old ◄Yes/Yes► New. S:Old ◄No/No► New. W:Add. Z:Discontinued. F:Interchangeable by set. K:Q'ty Change

++ CONTINUE ++

Copyright (C) YANMAR GLOBAL CS CO., LTD. All RightsReserved.

Fig.65. GENERATOR

(A)=YEG12SL
(B)=YEG16SL
(C)=YEG22SL
(D)=
(E)=
(F)=

No.	Lev.	Parts No.	Description	Q'ty (A)	(B)	(C)	(D)	(E)	(F)	I	R
103	2	982174-84670	STATOR SET			1					
104	2	982174-84680	STATOR SET			1					
105	2	982190-00030	GUARD	1	1	1					
106	2	26006-102502	BOLT 10X25	8	8	8					
107	2	22217-100000	WASHER, SPRING 10	8	8	8					
108	2	982116-90570	ROTOR SET	1							
109	2	982116-90580	ROTOR SET		1						
110	2	982116-90590	ROTOR SET			1					
111	2	982117-10011	RESISTOR	1	1	1					
112	2	26557-040402	SCREW, M4X40	1	1	1					
113	2	22217-040000	WASHER, SPRING 4	1	1	1					
114	2	22117-040000	WASHER, 4	1	1	1					
115	2	982512-10040	SILICON	4	4	4					
116	2	982512-10050	SILICON	3	3	3					
117	2	982117-40010	WASHER	16	16	16					
118	2	982111-90020	CONNECTOR	6	6	6					
119	2	982110-90100	COIL, FIELD	1	1						
120	2	982110-90110	COIL, EXCITOR			1					
121	2	26116-060502	BOLT, M6X 50 PLATED	6	6						
122	2	26116-060602	BOLT, M6X 60 PLATED			6					
123	2	22217-060000	WASHER, SPRING 6	6	6	6					
124	2	22117-060000	WASHER, 6	6	6	6					
125	2	24107-063074	BEARING, BALL 6307ZZ	1	1	1					
126	2	982110-20300	BRACKET	1	1	1					
127	2	982118-10590	BOLT	4	4						
128	2	982118-10600	BOLT			4					
129	2	26716-100002	NUT, M10	8	8	8					
130	2	22217-100000	WASHER, SPRING 10	8	8	8					

N:Old ◄Yes/No► New. Q:Old ◄No/Yes► New. R:Old ◄Yes/Yes► New. S:Old ◄No/No► New. W:Add. Z:Discontinued. F:Interchangeable by set. K:Q'ty Change

Copyright (C) YANMAR GLOBAL CS CO., LTD. All RightsReserved.

Fig.66. PANEL(TYPE A1,P)

(A)=YEG12SL
(B)=YEG16SL
(C)=YEG22SL
(D)=
(E)=
(F)=

No.	Lev.	Parts No.	Description	Q'ty (A)	(B)	(C)	(D)	(E)	(F)	I	R
1	1	982519-33800	PANEL	1							
2	1	982519-33810	PANEL ASSY	1							
3	1	982519-33820	PANEL ASSY	1							
4	1	982519-33830	PANEL ASSY	1							
5	1	982519-33840	PANEL ASSY	1							
6	1	982519-33850	PANEL ASSY	1							
7	1	982519-33860	PANEL ASSY	1							
8	1	982519-33870	PANEL ASSY	1							
9	1	982519-33880	PANEL ASSY	1							
10	1	982519-33890	PANEL ASSY	1							
11	1	982519-33900	PANEL ASSY	1							
12	1	982519-33910	PANEL ASSY	1							
13	1	982519-33920	PANEL ASSY	1							
14	1	982519-33930	PANEL ASSY	1							
15	1	982519-33940	PANEL ASSY	1							
16	1	982519-33950	PANEL ASSY	1							
17	1	982519-33960	PANEL ASSY	1							
18	1	982519-33970	PANEL ASSY		1						
19	1	982519-33980	PANEL ASSY		1						
20	1	982519-33990	PANEL ASSY		1						
21	1	982519-34000	PANEL ASSY		1						
22	1	982519-34010	PANEL ASSY		1						
23	1	982519-34020	PANEL ASSY		1						
24	1	982519-34030	PANEL ASSY		1						
25	1	982519-34040	PANEL ASSY		1						
26	1	982519-34050	PANEL ASSY		1						
27	1	982519-34060	PANEL ASSY		1						
28	1	982519-34070	PANEL ASSY		1						
29	1	982519-34080	PANEL ASSY		1						
30	1	982519-34090	PANEL ASSY		1						
31	1	982519-34100	PANEL ASSY		1						
32	1	982519-34110	PANEL ASSY		1						
33	1	982519-34120	PANEL ASSY		1						
34	1	982519-34130	PANEL ASSY		1						
35	1	982519-34140	PANEL ASSY			1					
36	1	982519-34150	PANEL ASSY			1					
37	1	982519-34160	PANEL ASSY			1					
38	1	982519-34170	PANEL ASSY			1					
39	1	982519-34180	PANEL ASSY			1					
40	1	982519-34190	PANEL ASSY			1					
41	1	982519-34200	PANEL ASSY			1					
42	1	982519-34210	PANEL ASSY			1					
43	1	982519-34220	PANEL ASSY			1					
44	1	982519-34230	PANEL ASSY			1					
45	1	982519-34240	PANEL ASSY			1					
46	1	982519-34250	PANEL ASSY			1					
47	1	982519-34260	PANEL ASSY			1					
48	1	982519-34270	PANEL ASSY			1					
49	1	982519-34280	PANEL ASSY			1					
50	1	982519-34290	PANEL ASSY			1					
51	1	982519-34300	PANEL ASSY			1					

N:Old ◄Yes/No► New, Q:Old ◄No/Yes► New, R:Old ◄Yes/Yes► New, S:Old ◄No/No► New, W:Add, Z:Discontinued, F:Interchangeable by set, K:Q'ty Change

++ CONTINUE ++

Copyright (C) YANMAR GLOBAL CS CO., LTD. All RightsReserved.

Fig.66. PANEL(TYPE A1,P)

(A)=YEG12SL
(B)=YEG16SL
(C)=YEG22SL
(D)=
(E)=
(F)=

No.	Lev.	Parts No.	Description	Q'ty (A)	(B)	(C)	(D)	(E)	(F)	I	R
52	2	982515-60060	AMMETER	1							
53	2	982515-60060	AMMETER	1							
54	2	982515-60040	AMMETER	1							
55	2	982515-60040	AMMETER	1							
56	2	982515-60040	AMMETER	1							
57	2	982515-60040	AMMETER	1							
58	2	982515-60120	AMMETER	1							
59	2	982515-60120	AMMETER	1							
60	2	982515-60070	AMMETER	1							
61	2	982515-60070	AMMETER	1							
62	2	982515-60060	AMMETER	1							
63	2	982515-60050	AMMETER	1							
64	2	982515-60050	AMMETER	1							
65	2	982515-60040	AMMETER	1							
66	2	982515-60130	AMMETER	1							
67	2	982515-60130	AMMETER	1							
68	2	982515-60120	AMMETER	1							
69	2	982515-60070	AMMETER		1						
70	2	982515-60070	AMMETER		1						
71	2	982515-60050	AMMETER		1						
72	2	982515-60050	AMMETER		1						
73	2	982515-60050	AMMETER		1						
74	2	982515-60050	AMMETER		1						
75	2	982515-60130	AMMETER		1						
76	2	982515-60130	AMMETER		1						
77	2	982515-60070	AMMETER		1						
78	2	982515-60070	AMMETER		1						
79	2	982515-60070	AMMETER		1						
80	2	982515-60050	AMMETER		1						
81	2	982515-60050	AMMETER		1						
82	2	982515-60050	AMMETER		1						
83	2	982515-60130	AMMETER		1						
84	2	982515-60130	AMMETER		1						
85	2	982515-60130	AMMETER		1						
86	2	982515-60080	AMMETER			1					
87	2	982515-60080	AMMETER			1					
88	2	982515-60060	AMMETER			1					
89	2	982515-60060	AMMETER			1					
90	2	982515-60050	AMMETER			1					
91	2	982515-60050	AMMETER			1					
92	2	982515-60140	AMMETER			1					
93	2	982515-60130	AMMETER			1					
94	2	982515-60080	AMMETER			1					
95	2	982515-60080	AMMETER			1					
96	2	982515-60080	AMMETER			1					
97	2	982515-60060	AMMETER			1					
98	2	982515-60060	AMMETER			1					
99	2	982515-60060	AMMETER			1					
100	2	982515-60140	AMMETER			1					
101	2	982515-60140	AMMETER			1					
102	2	982515-60140	AMMETER			1					

N:Old ◄Yes/No► New. Q:Old ◄No/Yes► New. R:Old ◄Yes/Yes► New. S:Old ◄No/No► New. W:Add. Z:Discontinued. F:Interchangeable by set. K:Q'ty Change

++ CONTINUE ++

Copyright (C) YANMAR GLOBAL CS CO., LTD. All RightsReserved.

Fig.66. PANEL(TYPE A1,P)

(A)=YEG12SL
(B)=YEG16SL
(C)=YEG22SL
(D)=
(E)=
(F)=

No.	Lev.	Parts No.	Description	Q'ty (A)	(B)	(C)	(D)	(E)	(F)	I	R
103	2	982510-50010	VOLTMETER	1	1	1					
104	2	982510-50550	VOLTMETER	1	1	1					
105	2	982510-50080	VOLTMETER	1	1	1					
106	2	982510-80220	METER, FREQUENCY	1	1	1					
107	2	982510-80056	METER, FREQUENCY	1	1	1					
108	2	982510-80220	METER, FREQUENCY	1	1	1					
109	2	982511-60010	LAMP	1	1	1					
110	2	982511-60020	LAMP	1	1	1					
111	2	982511-60010	LAMP	1	1	1					
112	2	982511-90060	KNOB	1	1	1					
113	2	982514-20270	SWITCH	1	1	1					
114	2	982513-80130	TERMINAL	2	2						
115	2	982513-80040	TERMINAL	2	2						
116	2	982513-80040	TERMINAL	4	4						
117	2	982513-80090	TERMINAL			2					
118	2	982513-80130	TERMINAL			2					
119	2	982513-80130	TERMINAL			4					
120	2	982511-00200	REGULATOR, VOLTAGE	1	1	1					
121	2	982512-50710	SWITCH	1							
122	2	982512-50710	SWITCH	1							
123	2	982512-50710	SWITCH	1							
124	2	982512-50720	SWITCH	1							
125	2	982512-50710	SWITCH	1							
126	2	982512-50720	SWITCH	1							
127	2	982512-50710	SWITCH	1							
128	2	982512-50720	SWITCH	1							
129	2	982512-50710	SWITCH	1							
130	2	982512-50730	SWITCH		1						
131	2	982512-50720	SWITCH		1						
132	2	982512-50730	SWITCH		1						
133	2	982512-50720	SWITCH		1						
134	2	982512-50720	SWITCH		1						
135	2	982512-50730	SWITCH		1						
136	2	982512-50730	SWITCH		1						
137	2	982512-50730	SWITCH		1						
138	2	982512-50740	SWITCH			1					
139	2	982512-50740	SWITCH			1					
140	2	982512-50730	SWITCH			1					
141	2	982512-50740	SWITCH			1					
142	2	982512-50730	SWITCH			1					
143	2	982512-50740	SWITCH			1					
144	2	982512-50740	SWITCH			1					
145	2	982512-50740	SWITCH			1					
146	2	982715-00560	REGULATOR, VOLTAGE	1							
147	2	982715-00561	REGULATOR, VOLTAGE	1							
148	2	982715-00564	REGULATOR, VOLTAGE	1							
149	2	982715-00565	REGULATOR, VOLTAGE	1							
150	2	982715-00566	REGULATOR, VOLTAGE	1							
151	2	982715-00567	REGULATOR, VOLTAGE	1							
152	2	982715-00561	REGULATOR, VOLTAGE	1							
153	2	982715-00562	REGULATOR, VOLTAGE	1							

N:Old ◄Yes/No► New, Q:Old ◄No/Yes► New, R:Old ◄Yes/Yes► New, S:Old ◄No/No► New, W:Add, Z:Discontinued, F:Interchangeable by set, K:Q'ty Change

++ CONTINUE ++

Copyright (C) YANMAR GLOBAL CS CO., LTD. All RightsReserved.

Fig.66. PANEL(TYPE A1,P)

(A)=YEG12SL
(B)=YEG16SL
(C)=YEG22SL
(D)=
(E)=
(F)=

No.	Lev.	Parts No.	Description	Q'ty (A)	(B)	(C)	(D)	(E)	(F)	I	R
154	2	982716-00561	REGULATOR, VOLTAGE	1							
155	2	982716-00562	REGULATOR, VOLTAGE	1							
156	2	982716-00563	REGULATOR, VOLTAGE	1							
157	2	982716-00565	REGULATOR, VOLTAGE	1							
158	2	982716-00566	REGULATOR, VOLTAGE	1							
159	2	982716-00567	REGULATOR, VOLTAGE	1							
160	2	982716-00561	REGULATOR, VOLTAGE	1							
161	2	982716-00562	REGULATOR, VOLTAGE	1							
162	2	982716-00563	REGULATOR, VOLTAGE	1							
163	2	982715-00570	REGULATOR, VOLTAGE		1						
164	2	982715-00571	REGULATOR, VOLTAGE		1						
165	2	982715-00574	REGULATOR, VOLTAGE		1						
166	2	982715-00575	REGULATOR, VOLTAGE		1						
167	2	982715-00576	REGULATOR, VOLTAGE		1						
168	2	982715-00577	REGULATOR, VOLTAGE		1						
169	2	982715-00571	REGULATOR, VOLTAGE		1						
170	2	982715-00572	REGULATOR, VOLTAGE		1						
171	2	982716-00571	REGULATOR, VOLTAGE		1						
172	2	982716-00572	REGULATOR, VOLTAGE		1						
173	2	982716-00573	REGULATOR, VOLTAGE		1						
174	2	982716-00575	REGULATOR, VOLTAGE		1						
175	2	982716-00576	REGULATOR, VOLTAGE		1						
176	2	982716-00577	REGULATOR, VOLTAGE		1						
177	2	982716-00571	REGULATOR, VOLTAGE		1						
178	2	982716-00572	REGULATOR, VOLTAGE		1						
179	2	982716-00573	REGULATOR, VOLTAGE		1						
180	2	982715-00580	REGULATOR, VOLTAGE			1					
181	2	982715-00581	REGULATOR, VOLTAGE			1					
182	2	982715-00584	REGULATOR, VOLTAGE			1					
183	2	982715-00585	REGULATOR, VOLTAGE			1					
184	2	982715-00586	REGULATOR, VOLTAGE			1					
185	2	982715-00587	REGULATOR, VOLTAGE			1					
186	2	982715-00581	REGULATOR, VOLTAGE			1					
187	2	982715-00582	REGULATOR, VOLTAGE			1					
188	2	982716-00581	REGULATOR, VOLTAGE			1					
189	2	982716-00582	REGULATOR, VOLTAGE			1					
190	2	982716-00583	REGULATOR, VOLTAGE			1					
191	2	982716-00585	REGULATOR, VOLTAGE			1					
192	2	982716-00586	REGULATOR, VOLTAGE			1					
193	2	982716-00587	REGULATOR, VOLTAGE			1					
194	2	982716-00581	REGULATOR, VOLTAGE			1					
195	2	982716-00582	REGULATOR, VOLTAGE			1					
196	2	982716-00583	REGULATOR, VOLTAGE			1					
197	2	982511-50670	TAP, TERMINAL	1	1	1					
198	2	982511-50680	TAP, TERMINAL	1	1	1					
199	2	982513-90070	TRANSFORMER	1							
200	2	982513-90050	TRANSFORMER	1							
201	2	982513-90050	TRANSFORMER	1							
202	2	982513-90080	TRANSFORMER	1							
203	2	982513-90070	TRANSFORMER	1							
204	2	982513-90060	TRANSFORMER	1							

N:Old $\frac{\text{Yes}}{\text{No}}$ New. Q:Old $\frac{\text{No}}{\text{Yes}}$ New. R:Old $\frac{\text{Yes}}{\text{Yes}}$ New. S:Old $\frac{\text{No}}{\text{No}}$ New. W:Add. Z:Discontinued. F:Interchangeable by set. K:Q'ty Change

++ CONTINUE ++

Copyright (C) YANMAR GLOBAL CS CO., LTD. All RightsReserved.

Fig.66. PANEL(TYPE A1,P)

(A)=YEG12SL
(B)=YEG16SL
(C)=YEG22SL
(D)=
(E)=
(F)=

No.	Lev.	Parts No.	Description	Q'ty (A)	(B)	(C)	(D)	(E)	(F)	I	R
205	2	982513-90050	TRANSFORMER	1							
206	2	982513-90060	TRANSFORMER	1							
207	2	982513-90050	TRANSFORMER	1							
208	2	982513-90080	TRANSFORMER		1						
209	2	982513-90060	TRANSFORMER		1						
210	2	982513-90060	TRANSFORMER		1						
211	2	982513-90150	TRANSFORMER			1					
212	2	982513-90070	TRANSFORMER			1					
213	2	982513-90060	TRANSFORMER			1					
214	2	982513-90070	TRANSFORMER			1					
215	2	982513-90060	TRANSFORMER			1					
216	2	982513-90150	TRANSFORMER			1					
217	2	982513-90070	TRANSFORMER			1					
218	2	982513-90070	TRANSFORMER			1					
219	2	170038-91310	LAMP	1	1	1					
220	2	982517-70100	SWITCH	1	1	1					
221	2	982514-10100	METER, HOUR	1	1	1					
222	2	129115-91250	SWITCH ASSY	1	1	1					
223	2	119650-77910	RELAY ASSY, GLOW	1	1	1					
224	2	119632-77920	TIMER	1	1	1					
225	2	982514-00040	RELAY	1	1	1					
226	2	119660-77710	LIMITER, CURRENT 15A	1	1	1					
227	2	982330-00480	SCREW	2	2	2					
228	2	22117-040000	WASHER, 4	4	4	4					
229	2	22217-040000	WASHER, SPRING 4	2	2	2					
230	2	26716-040002	NUT, M4	4	4	4					
231	2	982319-60160	SCREW SET	6	6	6					
232	2	982315-10430	NUT	4	4	4					
233	2	26116-050502	BOLT, M5X 50 PLATED	2	2	2					
234	2	22117-050000	WASHER, 5	4	4	4					
235	2	22217-050000	WASHER, SPRING 5	4	4	4					
236	2	26716-050002	NUT, M5	7	7	7					
237	2	982319-60180	BOLT SET	13	13	13					
238	2	982319-60080	SCREW SET	2	2	2					
239	2	26716-030002	NUT, M3	2	2	2					
240	2	982319-60080	SCREW SET	7	7	7					
241	2	26716-030002	NUT, M3	8	8	8					
242	2	22117-050000	WASHER, 5	1	1	1					
243	2	982518-60240	GUARD	1	1	1					
244	2	982518-60250	GUARD	1	1	1					
245	2	982317-00070	BOLT	2	2	2					
246	2	982515-71390	PANEL	1							
247	2	982515-71400	PANEL	1							
248	2	982515-71410	PANEL ASSY	1							
249	2	982515-71450	PANEL		1						
250	2	982515-71460	PANEL		1						
251	2	982515-71470	PANEL		1						
252	2	982515-71480	PANEL		1						
253	2	982515-71490	PANEL		1						
254	2	982515-71500	PANEL		1						
255	2	982515-71510	PANEL		1						

N:Old $\frac{\text{Yes}}{\text{No}}$ New. Q:Old $\frac{\text{No}}{\text{Yes}}$ New. R:Old $\frac{\text{Yes}}{\text{Yes}}$ New. S:Old $\frac{\text{No}}{\text{No}}$ New. W:Add. Z:Discontinued. F:Interchangeable by set. K:Q'ty Change

++ CONTINUE ++

Copyright (C) YANMAR GLOBAL CS CO., LTD. All RightsReserved.

Fig.66. PANEL(TYPE A1,P)

(A)=YEG12SL
(B)=YEG16SL
(C)=YEG22SL
(D)=
(E)=
(F)=

No.	Lev.	Parts No.	Description	Q'ty (A)	(B)	(C)	(D)	(E)	(F)	I	R
256	2	982515-71520	PANEL			1					
257	2	982515-71530	PANEL			1					
258	2	982515-71540	PANEL ASSY			1					
259	2	982515-71070	PANEL	1	1	1					
260	2	982515-71080	PANEL	1	1	1					
261	2	982513-80410	CONNECTOR	2	2						
262	2	982513-80420	CONNECTOR			2					

N:Old ◄Yes/No► New. Q:Old ◄No/Yes► New. R:Old ◄Yes/Yes► New. S:Old ◄No/No► New. W:Add. Z:Discontinued. F:Interchangeable by set. K:Q`ty Change

Copyright (C) YANMAR GLOBAL CS CO., LTD. All RightsReserved.

Fig.67. PANEL(TYPE B1)

(A)=YEG12SL
(B)=YEG16SL
(C)=YEG22SL
(D)=
(E)=
(F)=

No.	Lev.	Parts No.	Description	Q'ty (A)	(B)	(C)	(D)	(E)	(F)	I	R
1	1	982519-35070	PANEL ASSY	1							
2	1	982519-35080	PANEL ASSY	1							
3	1	982519-35090	PANEL ASSY	1							
4	1	982519-35100	PANEL ASSY	1							
5	1	982519-35110	PANEL ASSY	1							
6	1	982519-35120	PANEL ASSY	1							
7	1	982519-35130	PANEL ASSY	1							
8	1	982519-35140	PANEL ASSY	1							
9	1	982519-35150	PANEL ASSY	1							
10	1	982519-35160	PANEL ASSY	1							
11	1	982519-35170	PANEL ASSY	1							
12	1	982519-35180	PANEL ASSY	1							
13	1	982519-35190	PANEL ASSY	1							
14	1	982519-35200	PANEL ASSY	1							
15	1	982519-35210	PANEL ASSY	1							
16	1	982519-35220	PANEL ASSY	1							
17	1	982519-35230	PANEL ASSY	1							
18	1	982519-35240	PANEL ASSY		1						
19	1	982519-35250	PANEL ASSY		1						
20	1	982519-35260	PANEL ASSY		1						
21	1	982519-35270	PANEL ASSY		1						
22	1	982519-35280	PANEL ASSY		1						
23	1	982519-35290	PANEL ASSY		1						
24	1	982519-35300	PANEL ASSY		1						
25	1	982519-35310	PANEL ASSY		1						
26	1	982519-35320	PANEL ASSY		1						
27	1	982519-35330	PANEL ASSY		1						
28	1	982519-35340	PANEL ASSY		1						
29	1	982519-35350	PANEL ASSY		1						
30	1	982519-35360	PANEL ASSY		1						
31	1	982519-35370	PANEL ASSY		1						
32	1	982519-35380	PANEL ASSY		1						
33	1	982519-35390	PANEL ASSY		1						
34	1	982519-35400	PANEL ASSY		1						
35	1	982519-35410	PANEL ASSY			1					
36	1	982519-35420	PANEL ASSY			1					
37	1	982519-35430	PANEL ASSY			1					
38	1	982519-35440	PANEL ASSY			1					
39	1	982519-35450	PANEL ASSY			1					
40	1	982519-35460	PANEL ASSY			1					
41	1	982519-35470	PANEL ASSY			1					
42	1	982519-35480	PANEL ASSY			1					
43	1	982519-35490	PANEL ASSY			1					
44	1	982519-35500	PANEL ASSY			1					
45	1	982519-35510	PANEL ASSY			1					
46	1	982519-35520	PANEL ASSY			1					
47	1	982519-35530	PANEL ASSY			1					
48	1	982519-35540	PANEL ASSY			1					
49	1	982519-35550	PANEL ASSY			1					
50	1	982519-35560	PANEL ASSY			1					
51	1	982519-35570	PANEL ASSY			1					

N:Old $\frac{\text{Yes}}{\text{No}}$ New, Q:Old $\frac{\text{No}}{\text{Yes}}$ New, R:Old $\frac{\text{Yes}}{\text{Yes}}$ New, S:Old $\frac{\text{No}}{\text{No}}$ New, W:Add, Z:Discontinued, F:Interchangeable by set, K:Q'ty Change

++ CONTINUE ++

Copyright (C) YANMAR GLOBAL CS CO., LTD. All RightsReserved.

Fig.67. PANEL(TYPE B1)

(A)=YEG12SL
(B)=YEG16SL
(C)=YEG22SL
(D)=
(E)=
(F)=

No.	Lev.	Parts No.	Description	Q'ty (A)	(B)	(C)	(D)	(E)	(F)	I	R
52	2	982515-60060	AMMETER	1							
53	2	982515-60060	AMMETER	1							
54	2	982515-60040	AMMETER	1							
55	2	982515-60040	AMMETER	1							
56	2	982515-60040	AMMETER	1							
57	2	982515-60040	AMMETER	1							
58	2	982515-60120	AMMETER	1							
59	2	982515-60120	AMMETER	1							
60	2	982515-60070	AMMETER	1							
61	2	982515-60070	AMMETER	1							
62	2	982515-60060	AMMETER	1							
63	2	982515-60050	AMMETER	1							
64	2	982515-60050	AMMETER	1							
65	2	982515-60040	AMMETER	1							
66	2	982515-60130	AMMETER	1							
67	2	982515-60130	AMMETER	1							
68	2	982515-60120	AMMETER	1							
69	2	982515-60070	AMMETER		1						
70	2	982515-60070	AMMETER		1						
71	2	982515-60050	AMMETER		1						
72	2	982515-60050	AMMETER		1						
73	2	982515-60050	AMMETER		1						
74	2	982515-60050	AMMETER		1						
75	2	982515-60130	AMMETER		1						
76	2	982515-60130	AMMETER		1						
77	2	982515-60070	AMMETER		1						
78	2	982515-60070	AMMETER		1						
79	2	982515-60070	AMMETER		1						
80	2	982515-60050	AMMETER		1						
81	2	982515-60050	AMMETER		1						
82	2	982515-60050	AMMETER		1						
83	2	982515-60130	AMMETER		1						
84	2	982515-60130	AMMETER		1						
85	2	982515-60130	AMMETER		1						
86	2	982515-60080	AMMETER			1					
87	2	982515-60080	AMMETER			1					
88	2	982515-60060	AMMETER			1					
89	2	982515-60060	AMMETER			1					
90	2	982515-60050	AMMETER			1					
91	2	982515-60050	AMMETER			1					
92	2	982515-60140	AMMETER			1					
93	2	982515-60130	AMMETER			1					
94	2	982515-60080	AMMETER			1					
95	2	982515-60080	AMMETER			1					
96	2	982515-60080	AMMETER			1					
97	2	982515-60060	AMMETER			1					
98	2	982515-60060	AMMETER			1					
99	2	982515-60060	AMMETER			1					
100	2	982515-60140	AMMETER			1					
101	2	982515-60140	AMMETER			1					
102	2	982515-60140	AMMETER			1					

N:Old ◄Yes/No► New. Q:Old ◄No/Yes► New. R:Old ◄Yes/Yes► New. S:Old ◄No/No► New. W:Add. Z:Discontinued. F:Interchangeable by set. K:Q'ty Change

++ CONTINUE ++

Copyright (C) YANMAR GLOBAL CS CO., LTD. All RightsReserved.

Fig.67. PANEL(TYPE B1)

(A)=YEG12SL
(B)=YEG16SL
(C)=YEG22SL
(D)=
(E)=
(F)=

No.	Lev.	Parts No.	Description	Q'ty (A)	(B)	(C)	(D)	(E)	(F)	I	R
103	2	982510-50010	VOLTMETER	1	1	1					
104	2	982510-50550	VOLTMETER	1	1	1					
105	2	982510-50080	VOLTMETER	1	1	1					
106	2	982510-80220	METER, FREQUENCY	1	1	1					
107	2	982510-80056	METER, FREQUENCY	1	1	1					
108	2	982510-80220	METER, FREQUENCY	1	1	1					
109	2	982511-60010	LAMP	1	1	1					
110	2	982511-60020	LAMP	1	1	1					
111	2	982511-60010	LAMP	1	1	1					
112	2	982511-90060	KNOB	1	1	1					
113	2	982514-20270	SWITCH	1	1	1					
114	2	982513-80130	TERMINAL	2	2						
115	2	982513-80040	TERMINAL	2	2						
116	2	982513-80040	TERMINAL	4	4						
117	2	982513-80090	TERMINAL			2					
118	2	982513-80130	TERMINAL			2					
119	2	982513-80130	TERMINAL			4					
120	2	982511-00200	REGULATOR, VOLTAGE	1	1	1					
121	2	982512-50710	SWITCH	1							
122	2	982512-50710	SWITCH	1							
123	2	982512-50710	SWITCH	1							
124	2	982512-50720	SWITCH	1							
125	2	982512-50710	SWITCH	1							
126	2	982512-50720	SWITCH	1							
127	2	982512-50710	SWITCH	1							
128	2	982512-50720	SWITCH	1							
129	2	982512-50710	SWITCH	1							
130	2	982512-50730	SWITCH		1						
131	2	982512-50720	SWITCH		1						
132	2	982512-50730	SWITCH		1						
133	2	982512-50720	SWITCH		1						
134	2	982512-50720	SWITCH		1						
135	2	982512-50730	SWITCH		1						
136	2	982512-50730	SWITCH		1						
137	2	982512-50730	SWITCH		1						
138	2	982512-50740	SWITCH			1					
139	2	982512-50740	SWITCH			1					
140	2	982512-50730	SWITCH			1					
141	2	982512-50740	SWITCH			1					
142	2	982512-50730	SWITCH			1					
143	2	982512-50740	SWITCH			1					
144	2	982512-50740	SWITCH			1					
145	2	982512-50740	SWITCH			1					
146	2	982715-00560	REGULATOR, VOLTAGE	1							
147	2	982715-00561	REGULATOR, VOLTAGE	1							
148	2	982715-00564	REGULATOR, VOLTAGE	1							
149	2	982715-00565	REGULATOR, VOLTAGE	1							
150	2	982715-00566	REGULATOR, VOLTAGE	1							
151	2	982715-00567	REGULATOR, VOLTAGE	1							
152	2	982715-00561	REGULATOR, VOLTAGE	1							
153	2	982715-00562	REGULATOR, VOLTAGE	1							

N:Old ◄Yes/No► New, Q:Old ◄No/Yes► New, R:Old ◄Yes/Yes► New, S:Old ◄No/No► New, W:Add, Z:Discontinued, F:Interchangeable by set, K:Q'ty Change

++ CONTINUE ++

Copyright (C) YANMAR GLOBAL CS CO., LTD. All RightsReserved.

Fig.67. PANEL(TYPE B1)

(A)=YEG12SL
(B)=YEG16SL
(C)=YEG22SL
(D)=
(E)=
(F)=

No.	Lev.	Parts No.	Description	Q'ty (A)	(B)	(C)	(D)	(E)	(F)	I	R
154	2	982716-00561	REGULATOR, VOLTAGE	1							
155	2	982716-00562	REGULATOR, VOLTAGE	1							
156	2	982716-00563	REGULATOR, VOLTAGE	1							
157	2	982716-00565	REGULATOR, VOLTAGE	1							
158	2	982716-00566	REGULATOR, VOLTAGE	1							
159	2	982716-00567	REGULATOR, VOLTAGE	1							
160	2	982716-00561	REGULATOR, VOLTAGE	1							
161	2	982716-00562	REGULATOR, VOLTAGE	1							
162	2	982716-00563	REGULATOR, VOLTAGE	1							
163	2	982715-00570	REGULATOR, VOLTAGE		1						
164	2	982715-00571	REGULATOR, VOLTAGE		1						
165	2	982715-00574	REGULATOR, VOLTAGE		1						
166	2	982715-00575	REGULATOR, VOLTAGE		1						
167	2	982715-00576	REGULATOR, VOLTAGE		1						
168	2	982715-00577	REGULATOR, VOLTAGE		1						
169	2	982715-00571	REGULATOR, VOLTAGE		1						
170	2	982715-00572	REGULATOR, VOLTAGE		1						
171	2	982716-00571	REGULATOR, VOLTAGE		1						
172	2	982716-00572	REGULATOR, VOLTAGE		1						
173	2	982716-00573	REGULATOR, VOLTAGE		1						
174	2	982716-00575	REGULATOR, VOLTAGE		1						
175	2	982716-00576	REGULATOR, VOLTAGE		1						
176	2	982716-00577	REGULATOR, VOLTAGE		1						
177	2	982716-00571	REGULATOR, VOLTAGE		1						
178	2	982716-00572	REGULATOR, VOLTAGE		1						
179	2	982716-00573	REGULATOR, VOLTAGE		1						
180	2	982715-00580	REGULATOR, VOLTAGE			1					
181	2	982715-00581	REGULATOR, VOLTAGE			1					
182	2	982715-00584	REGULATOR, VOLTAGE			1					
183	2	982715-00585	REGULATOR, VOLTAGE			1					
184	2	982715-00586	REGULATOR, VOLTAGE			1					
185	2	982715-00587	REGULATOR, VOLTAGE			1					
186	2	982715-00581	REGULATOR, VOLTAGE			1					
187	2	982715-00582	REGULATOR, VOLTAGE			1					
188	2	982716-00581	REGULATOR, VOLTAGE			1					
189	2	982716-00582	REGULATOR, VOLTAGE			1					
190	2	982716-00583	REGULATOR, VOLTAGE			1					
191	2	982716-00585	REGULATOR, VOLTAGE			1					
192	2	982716-00586	REGULATOR, VOLTAGE			1					
193	2	982716-00587	REGULATOR, VOLTAGE			1					
194	2	982716-00581	REGULATOR, VOLTAGE			1					
195	2	982716-00582	REGULATOR, VOLTAGE			1					
196	2	982716-00583	REGULATOR, VOLTAGE			1					
197	2	982511-50670	TAP, TERMINAL	1	1	1					
198	2	982511-50680	TAP, TERMINAL	1	1	1					
199	2	982513-90070	TRANSFORMER	1							
200	2	982513-90050	TRANSFORMER	1							
201	2	982513-90050	TRANSFORMER	1							
202	2	982513-90080	TRANSFORMER	1							
203	2	982513-90070	TRANSFORMER	1							
204	2	982513-90060	TRANSFORMER	1							

N:Old $\frac{\text{Yes}}{\text{No}}$ New. Q:Old $\frac{\text{No}}{\text{Yes}}$ New. R:Old $\frac{\text{Yes}}{\text{Yes}}$ New. S:Old $\frac{\text{No}}{\text{No}}$ New. W:Add. Z:Discontinued. F:Interchangeable by set. K:Q'ty Change

++ CONTINUE ++

Copyright (C) YANMAR GLOBAL CS CO., LTD. All RightsReserved.

Fig.67. PANEL(TYPE B1)

(A)=YEG12SL
(B)=YEG16SL
(C)=YEG22SL
(D)=
(E)=
(F)=

No.	Lev.	Parts No.	Description	Q'ty (A)	(B)	(C)	(D)	(E)	(F)	I	R
205	2	982513-90050	TRANSFORMER	1							
206	2	982513-90060	TRANSFORMER	1							
207	2	982513-90050	TRANSFORMER	1							
208	2	982513-90080	TRANSFORMER		1						
209	2	982513-90060	TRANSFORMER		1						
210	2	982513-90060	TRANSFORMER		1						
211	2	982513-90150	TRANSFORMER			1					
212	2	982513-90070	TRANSFORMER			1					
213	2	982513-90060	TRANSFORMER			1					
214	2	982513-90070	TRANSFORMER			1					
215	2	982513-90060	TRANSFORMER			1					
216	2	982513-90150	TRANSFORMER			1					
217	2	982513-90070	TRANSFORMER			1					
218	2	982513-90070	TRANSFORMER			1					
219	2	170038-91310	LAMP	1	1	1					
220	2	982517-70100	SWITCH	1	1	1					
221	2	982514-10100	METER, HOUR	1	1	1					
222	2	129115-91250	SWITCH ASSY	1	1	1					
223	2	119650-77910	RELAY ASSY, GLOW	1	1	1					
224	2	119632-77920	TIMER	1	1	1					
225	2	982514-00040	RELAY	1	1	1					
226	2	119660-77710	LIMITER, CURRENT 15A	1	1	1					
227	2	982330-00480	SCREW	2	2	2					
228	2	22117-040000	WASHER, 4	4	4	4					
229	2	22217-040000	WASHER, SPRING 4	2	2	2					
230	2	26716-040002	NUT, M4	4	4	4					
231	2	982319-60160	SCREW SET	6	6	6					
232	2	982315-10430	NUT	4	4	4					
233	2	26116-050502	BOLT, M5X 50 PLATED	2	2	2					
234	2	22117-050000	WASHER, 5	4	4	4					
235	2	22217-050000	WASHER, SPRING 5	4	4	4					
236	2	26716-050002	NUT, M5	7	7	7					
237	2	982319-60180	BOLT SET	2	2	2					
238	2	982319-60080	SCREW SET	2	2	2					
239	2	26716-030002	NUT, M3	2	2	2					
240	2	982319-60140	BOLT SET	7	7	7					
241	2	26716-060002	NUT, M6	8	8	8					
242	2	22117-060000	WASHER, 6	1	1	1					
243	2	982518-60240	GUARD	1	1	1					
244	2	982518-60250	GUARD	1	1	1					
245	2	982317-00070	BOLT	2	2	2					
246	2	982515-71610	PANEL	1							
247	2	982515-71620	PANEL	1							
248	2	982515-71630	PANEL	1							
249	2	982515-71670	PANEL		1						
250	2	982515-71680	PANEL		1						
251	2	982515-71690	PANEL		1						
252	2	982515-71700	PANEL		1						
253	2	982515-71710	PANEL		1						
254	2	982515-71720	PANEL		1						
255	2	982515-71730	PANEL		1						

N:Old ◄Yes/No► New. Q:Old ◄No/Yes► New. R:Old ◄Yes/Yes► New. S:Old ◄No/No► New. W:Add. Z:Discontinued. F:Interchangeable by set. K:Q'ty Change

++ CONTINUE ++

Copyright (C) YANMAR GLOBAL CS CO., LTD. All RightsReserved.

Fig.67. PANEL(TYPE B1)

(A)=YEG12SL
(B)=YEG16SL
(C)=YEG22SL
(D)=
(E)=
(F)=

No.	Lev.	Parts No.	Description	Q'ty (A)	(B)	(C)	(D)	(E)	(F)	I	R
256	2	982515-71740	PANEL			1					
257	2	982515-71750	PANEL			1					
258	2	982515-71760	PANEL			1					
259	2	982515-71160	PANEL	1	1	1					
260	2	982319-60130	BOLT SET	4	4	4					
261	2	982319-60150	BOLT SET	4	4	4					
262	2	26716-080002	NUT, M8	4	4	4					
263	2	982513-80410	CONNECTOR	2	2						
264	2	982513-80420	CONNECTOR			2					

N:Old ◄Yes/No► New. Q:Old ◄No/Yes► New. R:Old ◄Yes/Yes► New. S:Old ◄No/No► New. W:Add. Z:Discontinued. F:Interchangeable by set. K:Q'ty Change

Copyright (C) YANMAR GLOBAL CS CO., LTD. All RightsReserved.

Fig.68. PANEL(TYPE BS)

(A)=YEG12SL
(B)=YEG16SL
(C)=YEG22SL
(D)=
(E)=
(F)=

No.	Lev.	Parts No.	Description	Q'ty (A)	(B)	(C)	(D)	(E)	(F)	I	R
1	1	982519-36340	PANEL ASSY	1							
2	1	982519-36350	PANEL ASSY	1							
3	1	982519-36360	PANEL ASSY	1							
4	1	982519-36370	PANEL ASSY	1							
5	1	982519-36380	PANEL ASSY	1							
6	1	982519-36390	PANEL ASSY	1							
7	1	982519-36400	PANEL ASSY	1							
8	1	982519-36410	PANEL ASSY	1							
9	1	982519-36420	PANEL ASSY	1							
10	1	982519-36430	PANEL ASSY	1							
11	1	982519-36440	PANEL ASSY	1							
12	1	982519-36450	PANEL ASSY	1							
13	1	982519-36460	PANEL ASSY	1							
14	1	982519-36470	PANEL ASSY	1							
15	1	982519-36480	PANEL ASSY	1							
16	1	982519-36490	PANEL ASSY	1							
17	1	982519-36500	PANEL ASSY	1							
18	1	982519-36510	PANEL ASSY		1						
19	1	982519-36520	PANEL ASSY		1						
20	1	982519-36530	PANEL ASSY		1						
21	1	982519-36540	PANEL ASSY		1						
22	1	982519-36550	PANEL ASSY		1						
23	1	982519-36560	PANEL ASSY		1						
24	1	982519-36570	PANEL ASSY		1						
25	1	982519-36580	PANEL ASSY		1						
26	1	982519-36590	PANEL ASSY		1						
27	1	982519-36600	PANEL ASSY		1						
28	1	982519-36610	PANEL ASSY		1						
29	1	982519-36620	PANEL ASSY		1						
30	1	982519-36630	PANEL ASSY		1						
31	1	982519-36640	PANEL ASSY		1						
32	1	982519-36650	PANEL ASSY		1						
33	1	982519-36660	PANEL ASSY		1						
34	1	982519-36670	PANEL ASSY		1						
35	1	982519-36680	PANEL ASSY			1					
36	1	982519-36690	PANEL ASSY			1					
37	1	982519-36700	PANEL ASSY			1					
38	1	982519-36710	PANEL ASSY			1					
39	1	982519-36720	PANEL ASSY			1					
40	1	982519-36730	PANEL ASSY			1					
41	1	982519-36740	PANEL ASSY			1					
42	1	982519-36750	PANEL ASSY			1					
43	1	982519-36760	PANEL ASSY			1					
44	1	982519-36770	PANEL ASSY			1					
45	1	982519-36780	PANEL ASSY			1					
46	1	982519-36790	PANEL ASSY			1					
47	1	982519-36800	PANEL ASSY			1					
48	1	982519-36810	PANEL ASSY			1					
49	1	982519-36820	PANEL ASSY			1					
50	1	982519-36830	PANEL ASSY			1					
51	1	982519-36840	PANEL ASSY			1					

N:Old $\frac{\text{Yes}}{\text{No}}$ New, Q:Old $\frac{\text{No}}{\text{Yes}}$ New, R:Old $\frac{\text{Yes}}{\text{Yes}}$ New, S:Old $\frac{\text{No}}{\text{No}}$ New, W:Add, Z:Discontinued, F:Interchangeable by set, K:Q'ty Change

++ CONTINUE ++

Copyright (C) YANMAR GLOBAL CS CO., LTD. All RightsReserved.

Fig.68. PANEL(TYPE BS)

(A)=YEG12SL
(B)=YEG16SL
(C)=YEG22SL
(D)=
(E)=
(F)=

No.	Lev.	Parts No.	Description	Q'ty (A)	(B)	(C)	(D)	(E)	(F)	I	R
52	2	982515-60060	AMMETER	1							
53	2	982515-60060	AMMETER	1							
54	2	982515-60040	AMMETER	1							
55	2	982515-60040	AMMETER	1							
56	2	982515-60040	AMMETER	1							
57	2	982515-60040	AMMETER	1							
58	2	982515-60120	AMMETER	1							
59	2	982515-60120	AMMETER	1							
60	2	982515-60070	AMMETER	1							
61	2	982515-60070	AMMETER	1							
62	2	982515-60060	AMMETER	1							
63	2	982515-60050	AMMETER	1							
64	2	982515-60050	AMMETER	1							
65	2	982515-60040	AMMETER	1							
66	2	982515-60130	AMMETER	1							
67	2	982515-60130	AMMETER	1							
68	2	982515-60120	AMMETER	1							
69	2	982515-60070	AMMETER		1						
70	2	982515-60070	AMMETER		1						
71	2	982515-60050	AMMETER		1						
72	2	982515-60050	AMMETER		1						
73	2	982515-60050	AMMETER		1						
74	2	982515-60050	AMMETER		1						
75	2	982515-60130	AMMETER		1						
76	2	982515-60130	AMMETER		1						
77	2	982515-60070	AMMETER		1						
78	2	982515-60070	AMMETER		1						
79	2	982515-60070	AMMETER		1						
80	2	982515-60050	AMMETER		1						
81	2	982515-60050	AMMETER		1						
82	2	982515-60050	AMMETER		1						
83	2	982515-60130	AMMETER		1						
84	2	982515-60130	AMMETER		1						
85	2	982515-60130	AMMETER		1						
86	2	982515-60080	AMMETER			1					
87	2	982515-60080	AMMETER			1					
88	2	982515-60060	AMMETER			1					
89	2	982515-60060	AMMETER			1					
90	2	982515-60050	AMMETER			1					
91	2	982515-60050	AMMETER			1					
92	2	982515-60140	AMMETER			1					
93	2	982515-60130	AMMETER			1					
94	2	982515-60080	AMMETER			1					
95	2	982515-60080	AMMETER			1					
96	2	982515-60080	AMMETER			1					
97	2	982515-60060	AMMETER			1					
98	2	982515-60060	AMMETER			1					
99	2	982515-60060	AMMETER			1					
100	2	982515-60140	AMMETER			1					
101	2	982515-60140	AMMETER			1					
102	2	982515-60140	AMMETER			1					

N:Old ◄Yes/No► New. Q:Old ◄No/Yes► New. R:Old ◄Yes/Yes► New. S:Old ◄No/No► New. W:Add. Z:Discontinued. F:Interchangeable by set. K:Q'ty Change

++ CONTINUE ++

Copyright (C) YANMAR GLOBAL CS CO., LTD. All RightsReserved.

Fig.68. PANEL(TYPE BS)

(A)=YEG12SL
(B)=YEG16SL
(C)=YEG22SL
(D)=
(E)=
(F)=

No.	Lev.	Parts No.	Description	Q'ty (A)	(B)	(C)	(D)	(E)	(F)	I	R
103	2	982510-50010	VOLTMETER	1	1	1					
104	2	982510-50550	VOLTMETER	1	1	1					
105	2	982510-50080	VOLTMETER	1	1	1					
106	2	982510-80220	METER, FREQUENCY	1	1	1					
107	2	982510-80056	METER, FREQUENCY	1	1	1					
108	2	982510-80220	METER, FREQUENCY	1	1	1					
109	2	982511-60010	LAMP	1	1	1					
110	2	982511-60020	LAMP	1	1	1					
111	2	982511-60010	LAMP	1	1	1					
112	2	982511-90060	KNOB	1	1	1					
113	2	982514-20270	SWITCH	1	1	1					
114	2	982513-80130	TERMINAL	2	2						
115	2	982513-80040	TERMINAL	2	2						
116	2	982513-80040	TERMINAL	4	4						
117	2	982513-80090	TERMINAL			2					
118	2	982513-80130	TERMINAL			2					
119	2	982513-80130	TERMINAL			4					
120	2	982511-00200	REGULATOR, VOLTAGE	1	1	1					
121	2	982512-50710	SWITCH	1							
122	2	982512-50710	SWITCH	1							
123	2	982512-50710	SWITCH	1							
124	2	982512-50720	SWITCH	1							
125	2	982512-50710	SWITCH	1							
126	2	982512-50720	SWITCH	1							
127	2	982512-50710	SWITCH	1							
128	2	982512-50720	SWITCH	1							
129	2	982512-50710	SWITCH	1							
130	2	982512-50730	SWITCH		1						
131	2	982512-50720	SWITCH		1						
132	2	982512-50730	SWITCH		1						
133	2	982512-50720	SWITCH		1						
134	2	982512-50720	SWITCH		1						
135	2	982512-50730	SWITCH		1						
136	2	982512-50730	SWITCH		1						
137	2	982512-50730	SWITCH		1						
138	2	982512-50740	SWITCH			1					
139	2	982512-50740	SWITCH			1					
140	2	982512-50730	SWITCH			1					
141	2	982512-50740	SWITCH			1					
142	2	982512-50730	SWITCH			1					
143	2	982512-50740	SWITCH			1					
144	2	982512-50740	SWITCH			1					
145	2	982512-50740	SWITCH			1					
146	2	982715-00560	REGULATOR, VOLTAGE	1							
147	2	982715-00561	REGULATOR, VOLTAGE	1							
148	2	982715-00564	REGULATOR, VOLTAGE	1							
149	2	982715-00565	REGULATOR, VOLTAGE	1							
150	2	982715-00566	REGULATOR, VOLTAGE	1							
151	2	982715-00567	REGULATOR, VOLTAGE	1							
152	2	982715-00561	REGULATOR, VOLTAGE	1							
153	2	982715-00562	REGULATOR, VOLTAGE	1							

N:Old ◄Yes/No► New, Q:Old ◄No/Yes► New, R:Old ◄Yes/Yes► New, S:Old ◄No/No► New, W:Add, Z:Discontinued, F:Interchangeable by set, K:Q'ty Change

++ CONTINUE ++

Copyright (C) YANMAR GLOBAL CS CO., LTD. All RightsReserved.

Fig.68. PANEL(TYPE BS)

(A)=YEG12SL
(B)=YEG16SL
(C)=YEG22SL
(D)=
(E)=
(F)=

No.	Lev.	Parts No.	Description	Q'ty (A)	(B)	(C)	(D)	(E)	(F)	I	R
154	2	982716-00561	REGULATOR, VOLTAGE	1							
155	2	982716-00562	REGULATOR, VOLTAGE	1							
156	2	982716-00563	REGULATOR, VOLTAGE	1							
157	2	982716-00565	REGULATOR, VOLTAGE	1							
158	2	982716-00566	REGULATOR, VOLTAGE	1							
159	2	982716-00567	REGULATOR, VOLTAGE	1							
160	2	982716-00561	REGULATOR, VOLTAGE	1							
161	2	982716-00562	REGULATOR, VOLTAGE	1							
162	2	982716-00563	REGULATOR, VOLTAGE	1							
163	2	982715-00570	REGULATOR, VOLTAGE		1						
164	2	982715-00571	REGULATOR, VOLTAGE		1						
165	2	982715-00574	REGULATOR, VOLTAGE		1						
166	2	982715-00575	REGULATOR, VOLTAGE		1						
167	2	982715-00576	REGULATOR, VOLTAGE		1						
168	2	982715-00577	REGULATOR, VOLTAGE		1						
169	2	982715-00571	REGULATOR, VOLTAGE		1						
170	2	982715-00572	REGULATOR, VOLTAGE		1						
171	2	982716-00571	REGULATOR, VOLTAGE		1						
172	2	982716-00572	REGULATOR, VOLTAGE		1						
173	2	982716-00573	REGULATOR, VOLTAGE		1						
174	2	982716-00575	REGULATOR, VOLTAGE		1						
175	2	982716-00576	REGULATOR, VOLTAGE		1						
176	2	982716-00577	REGULATOR, VOLTAGE		1						
177	2	982716-00571	REGULATOR, VOLTAGE		1						
178	2	982716-00572	REGULATOR, VOLTAGE		1						
179	2	982716-00573	REGULATOR, VOLTAGE		1						
180	2	982715-00580	REGULATOR, VOLTAGE			1					
181	2	982715-00581	REGULATOR, VOLTAGE			1					
182	2	982715-00584	REGULATOR, VOLTAGE			1					
183	2	982715-00585	REGULATOR, VOLTAGE			1					
184	2	982715-00586	REGULATOR, VOLTAGE			1					
185	2	982715-00587	REGULATOR, VOLTAGE			1					
186	2	982715-00581	REGULATOR, VOLTAGE			1					
187	2	982715-00582	REGULATOR, VOLTAGE			1					
188	2	982716-00581	REGULATOR, VOLTAGE			1					
189	2	982716-00582	REGULATOR, VOLTAGE			1					
190	2	982716-00583	REGULATOR, VOLTAGE			1					
191	2	982716-00585	REGULATOR, VOLTAGE			1					
192	2	982716-00586	REGULATOR, VOLTAGE			1					
193	2	982716-00587	REGULATOR, VOLTAGE			1					
194	2	982716-00581	REGULATOR, VOLTAGE			1					
195	2	982716-00582	REGULATOR, VOLTAGE			1					
196	2	982716-00583	REGULATOR, VOLTAGE			1					
197	2	982511-50670	TAP, TERMINAL	1	1	1					
198	2	982511-50680	TAP, TERMINAL	1	1	1					
199	2	982513-90070	TRANSFORMER	1							
200	2	982513-90050	TRANSFORMER	1							
201	2	982513-90050	TRANSFORMER	1							
202	2	982513-90080	TRANSFORMER	1							
203	2	982513-90070	TRANSFORMER	1							
204	2	982513-90060	TRANSFORMER	1							

N:Old $\xleftarrow[\text{No}]{\text{Yes}}$ New. Q:Old $\xleftarrow[\text{Yes}]{\text{No}}$ New. R:Old $\xleftarrow[\text{Yes}]{\text{Yes}}$ New. S:Old $\xleftarrow[\text{No}]{\text{No}}$ New. W:Add. Z:Discontinued. F:Interchangeable by set. K:Q'ty Change

++ CONTINUE ++

Copyright (C) YANMAR GLOBAL CS CO., LTD. All RightsReserved.

Fig.68. PANEL(TYPE BS)

(A)=YEG12SL
(B)=YEG16SL
(C)=YEG22SL
(D)=
(E)=
(F)=

No.	Lev.	Parts No.	Description	Q'ty (A)	(B)	(C)	(D)	(E)	(F)	I	R
205	2	982513-90050	TRANSFORMER	1							
206	2	982513-90060	TRANSFORMER	1							
207	2	982513-90050	TRANSFORMER	1							
208	2	982513-90080	TRANSFORMER		1						
209	2	982513-90060	TRANSFORMER		1						
210	2	982513-90060	TRANSFORMER		1						
211	2	982513-90150	TRANSFORMER			1					
212	2	982513-90070	TRANSFORMER			1					
213	2	982513-90060	TRANSFORMER			1					
214	2	982513-90070	TRANSFORMER			1					
215	2	982513-90060	TRANSFORMER			1					
216	2	982513-90150	TRANSFORMER			1					
217	2	982513-90070	TRANSFORMER			1					
218	2	982513-90070	TRANSFORMER			1					
219	2	170038-91310	LAMP	1	1	1					
220	2	982517-70100	SWITCH	1	1	1					
221	2	982514-10100	METER, HOUR	1	1	1					
222	2	129115-91250	SWITCH ASSY	1	1	1					
223	2	119650-77910	RELAY ASSY, GLOW	1	1	1					
224	2	119632-77920	TIMER	1	1	1					
225	2	982514-00040	RELAY	1	1	1					
226	2	119660-77710	LIMITER, CURRENT 15A	1	1	1					
227	2	982215-00870	THROTTLE	1							
228	2	982215-00880	THROTTLE		1	1					
229	2	982319-60240	SCREW SET	2	2	2					
230	2	26716-040002	NUT, M4	4	4	4					
231	2	982319-60160	SCREW SET	6	6	6					
232	2	982315-10430	NUT	4	4	4					
233	2	26116-050502	BOLT, M5X 50 PLATED	2	2	2					
234	2	22117-050000	WASHER, 5	4	4	4					
235	2	22217-050000	WASHER, SPRING 5	4	4	4					
236	2	26716-050002	NUT, M5	11	11	11					
237	2	982319-60180	BOLT SET	14	14	14					
238	2	982319-60080	SCREW SET	2	2	2					
239	2	26716-030002	NUT, M3	10	10	10					
240	2	982319-60140	BOLT SET	7	7	7					
241	2	26716-060002	NUT, M6	8	8	8					
242	2	22117-060000	WASHER, 6	1	1	1					
243	2	982287-00210	HINGE	2	2	2					
244	2	982287-00220	BOLT	1	1	1					
245	2	982515-71850	PLATE	1	1						
246	2	982515-71860	PLATE	1	1						
247	2	982515-71870	PLATE ASSY	1	1						
248	2	982515-71880	PLATE			1					
249	2	982515-71890	PLATE			1					
250	2	982515-71900	PLATE			1					
251	2	982515-71910	PANEL	1							
252	2	982515-71920	PANEL			1					
253	2	982515-71920	PANEL		1						
254	2	982515-71910	PANEL		1						
255	2	982515-71910	PANEL		1						

N:Old ◄Yes/No► New. Q:Old ◄No/Yes► New. R:Old ◄Yes/Yes► New. S:Old ◄No/No► New. W:Add. Z:Discontinued. F:Interchangeable by set. K:Q'ty Change

++ CONTINUE ++

Copyright (C) YANMAR GLOBAL CS CO., LTD. All RightsReserved.

Fig.68. PANEL(TYPE BS)

(A)=YEG12SL
(B)=YEG16SL
(C)=YEG22SL
(D)=
(E)=
(F)=

No.	Lev.	Parts No.	Description	Q'ty (A)	(B)	(C)	(D)	(E)	(F)	I	R
256	2	982515-71910	PANEL		1						
257	2	982515-71920	PANEL		1						
258	2	982515-71940	PLATE	1							
259	2	982515-71950	PLATE			1					
260	2	982515-71950	PLATE		1						
261	2	982515-71940	PLATE		1						
262	2	982515-71940	PLATE		1						
263	2	982515-71940	PLATE		1						
264	2	982515-71950	PLATE		1						
265	2	982319-60150	BOLT SET	4	4	4					
266	2	26716-080002	NUT, M8	4	4	4					
267	2	982513-80410	CONNECTOR	2	2						
268	2	982513-80420	CONNECTOR			2					
269	2	982515-71230	PLATE	1	1	1					
270	2	982515-71310	PLATE	1	1	1					

N:Old ◄Yes/No► New. Q:Old ◄No/Yes► New. R:Old ◄Yes/Yes► New. S:Old ◄No/No► New. W:Add. Z:Discontinued. F:Interchangeable by set. K:Q'ty Change

Copyright (C) YANMAR GLOBAL CS CO., LTD. All RightsReserved.

Fig.69. FRAME(TYPE P)

(A)=YEG12SL
(B)=YEG16SL
(C)=YEG22SL
(D)=
(E)=
(F)=

No.	Lev.	Parts No.	Description	Q'ty (A)	(B)	(C)	(D)	(E)	(F)	I	R
1	1	982210-40750	FRAME	1							
2	1	982210-40760	FRAME		1						
3	1	982210-40770	FRAME			1					
4	1	982247-00200	MOUNT, ENGINE	1	1	1					
5	1	982247-00220	MOUNT, ENGINE	1	1	1					
6	1	982219-00580	RUBBER,CUSHION	4	4	4					
7	1	26116-120752	BOLT, M12X 75 PLATED	2	2	2					
8	1	22117-120000	WASHER, 12	2	2	2					
9	1	22217-120000	WASHER, SPRING 12	2	2	2					
10	1	26716-120002	NUT, M12	4	4	4					
11	1	982319-60250	BOLT SET	8	8	8					
12	1	22217-100000	WASHER, SPRING 10	24	24	24					
13	1	982298-20010	PLATE	1	1						
14	1	982298-20020	BRACKET, RESERVOIR			1					
15	1	982319-60140	BOLT SET	2	2	2					
16	1	26716-060002	NUT, M6	2	2	2					
17	1	26116-080252	BOLT, M8X 25 PLATED	4	4	4					
18	1	26716-080002	NUT, M8	8	8	12					
19	1	982217-90640	TANK, FUEL	1							
20	1	982217-90650	TANK, FUEL		1	1					
21	1	982217-90660	CAP	1	1	1					
22	1	982218-00140	BAND, TANK	2							
23	1	982218-00230	BAND, TANK		2	2					
24	1	22217-080000	WASHER, SPRING 8	4	4	4					
25	1	982283-00700	HOSE	1							
26	1	982283-00720	HOSE		1	1					
27	1	982283-00710	HOSE	1							
28	1	982283-00730	HOSE		1	1					
29	1	982284-00080	CLAMP	4	4	4					
30	1	982217-00040	BATTERY	1	1	1					
31	1	982212-30070	CLAMP	1	1	1					
32	1	982212-30080	BOLT	2	2	2					
33	1	982317-00070	BOLT	2	2	2					
34	1	129150-49170	COOK ASSY	1	1	1					
35	1	982283-00760	HOSE	1	1	1					
36	1	982283-00790	HOSE	1	1	1					
37	1	982284-00016	CLAMP	4	4	4					
38	1	982219-10050	WHEEL	2	2	2					
39	1	982219-10070	CASTER	2	2	2					
40	1	26116-100202	BOLT, M10X 20 PLATED	16	16	16					
41	1	26716-100002	NUT, M10	16	16	16					

N:Old ◄Yes/No► New. Q:Old ◄No/Yes► New. R:Old ◄Yes/Yes► New. S:Old ◄No/No► New. W:Add. Z:Discontinued. F:Interchangeable by set. K:Q'ty Change

Copyright (C) YANMAR GLOBAL CS CO., LTD. All RightsReserved.

Fig.70. FRAME(TYPE A1)

(A)=YEG12SL
(B)=YEG16SL
(C)=YEG22SL
(D)=
(E)=
(F)=

No.	Lev.	Parts No.	Description	Q'ty (A)	(B)	(C)	(D)	(E)	(F)	I	R
1	1	982210-40830	BED, COMMON	1							
2	1	982210-40840	BED, COMMON		1						
3	1	982210-40850	BED, COMMON			1					
4	1	982210-40870	PANEL, MOUNT	1							
5	1	982210-40880	PANEL, MOUNT		1	1					
6	1	982247-00240	MOUNT, ENGINE	2	2	2					
7	1	982219-00580	RUBBER,CUSHION	4	4	4					
8	1	26116-100250	BOLT 10X 25	8	8	8					
9	1	22217-100000	WASHER, SPRING 10	12	12	12					
10	1	982298-20010	PLATE	1	1						
11	1	982298-20020	BRACKET, RESERVOIR			1					
12	1	982319-60140	BOLT SET	2	2	2					
13	1	26716-060002	NUT, M6	6	6	6					
14	1	982319-60250	BOLT SET	4	4	4					
15	1	26716-080002	NUT, M8	8	8	12					
16	1	982217-90640	TANK, FUEL	1							
17	1	982217-90650	TANK, FUEL		1	1					
18	1	982217-90660	CAP	1	1	1					
19	1	982218-00140	BAND, TANK	2							
20	1	982218-00230	BAND, TANK		2	2					
21	1	22217-080000	WASHER, SPRING 8	4	4	4					
22	1	982283-00700	HOSE	1							
23	1	982283-00720	HOSE		1	1					
24	1	982283-00710	HOSE	1							
25	1	982283-00730	HOSE		1	1					
26	1	982284-00080	CLAMP	4	4	4					
27	1	26116-100302	BOLT, M10X 30 PLATED	4	4	4					
28	1	26716-100002	NUT, M10	4	4	4					
29	1	982217-00040	BATTERY	1	1	1					
30	1	982212-30070	CLAMP	1	1	1					
31	1	982212-30080	BOLT	2	2	2					
32	1	22117-060000	WASHER, 6	2	2	2					
33	1	129150-49100	COCK ASSY, 3-WAY	1	1	1					
34	1	982283-00800	HOSE	1	1	1					
35	1	982283-00830	HOSE	1	1	1					
36	1	982284-00016	CLAMP	4	4	4					

N:Old ◄Yes/No► New. Q:Old ◄No/Yes► New. R:Old ◄Yes/Yes► New. S:Old ◄No/No► New. W:Add. Z:Discontinued. F:Interchangeable by set. K:Q'ty Change

Copyright (C) YANMAR GLOBAL CS CO., LTD. All RightsReserved.

Fig.71. BONNET(TYPE B1)

(A)=YEG12SL
(B)=YEG16SL
(C)=YEG22SL
(D)=
(E)=
(F)=

No.	Lev.	Parts No.	Description	Q'ty (A)	(B)	(C)	(D)	(E)	(F)	I	R
1	1	982215-20466	BED, COMMON	1							
2	1	982215-20467	BED, COMMON		1						
3	1	982215-20468	BED, COMMON			1					
4	1	982247-00240	MOUNT, ENGINE	2	2	2					
5	1	982219-00580	RUBBER,CUSHION	4	4	4					
6	1	26116-100252	BOLT, M10X 25 PLATED	8	8	8					
7	1	22217-100000	WASHER, SPRING 10	24	24	24					
8	1	982215-20470	COVER	1	1	1					
9	1	982215-20472	COVER	1	1	1					
10	1	982215-20474	COVER	1	1	1					
11	1	982215-20485	COVER	1	1	1					
12	1	982215-20486	BOLT SET	36	36	36					
13	1	982319-60160	SCREW SET	4	4	4					
14	1	26716-040002	NUT, M4	4	4	4					
15	1	982215-20488	COVER	1							
16	1	982215-20489	COVER		1	1					
17	1	982217-90640	TANK, FUEL	1							
18	1	982217-90650	TANK, FUEL		1	1					
19	1	982217-90660	CAP		1	1					
20	1	982218-00250	BAND, TANK	2							
21	1	982218-00260	BAND, TANK		2	2					
22	1	982283-00700	HOSE	1							
23	1	982283-00720	HOSE		1	1					
24	1	982283-00710	HOSE	1							
25	1	982283-00730	HOSE		1	1					
26	1	982284-00080	CLAMP	4	4	4					
27	1	982319-60250	BOLT SET	8	8	8					
28	1	26716-080002	NUT, M8	13	13	13					
29	1	982215-20492	COVER	1	1						
30	1	982215-20493	COVER			1					
31	1	982217-90630	CAP	1	1	1					
32	1	982298-20010	PLATE	1	1						
33	1	982298-20020	BRACKET, RESERVOIR			1					
34	1	982319-60140	BOLT SET	2	2	2					
35	1	26716-060002	NUT, M6	2	2	2					
36	1	982215-20495	COVER	1							
37	1	982215-20496	COVER		1	1					
38	1	982319-60260	BOLT SET	6	6	6					
39	1	982215-20498	DOOR	1							
40	1	982215-20499	DOOR		1	1					
41	1	982287-00230	HANDLE	1	1	1					
42	1	982215-20500	HOLE, PEEP	1	1	1					
43	1	982215-20501	ARM	1	1	1					
44	1	982286-00060	HINGE	2	3	3					
45	1	982336-08200	SCREW	4	4	4					
46	1	22217-080000	WASHER, SPRING 8	4	4	4					
47	1	26116-080302	BOLT, M8X 30 PLATED	1	1	1					
48	1	22117-080000	WASHER, 8	1	1	1					
49	1	982319-60180	BOLT SET	6	8	8					
50	1	982332-05010	SCREW	6	9	9					
51	1	982217-00040	BATTERY	1	1	1					

N:Old ◄Yes/No► New. Q:Old ◄No/Yes► New. R:Old ◄Yes/Yes► New. S:Old ◄No/No► New. W:Add. Z:Discontinued. F:Interchangeable by set. K:Q'ty Change

++ CONTINUE ++

Copyright (C) YANMAR GLOBAL CS CO., LTD. All RightsReserved.

Fig.71. BONNET(TYPE B1)

(A)=YEG12SL
(B)=YEG16SL
(C)=YEG22SL
(D)=
(E)=
(F)=

No.	Lev.	Parts No.	Description	Q'ty (A)	(B)	(C)	(D)	(E)	(F)	I	R
52	1	982212-30070	CLAMP	1	1	1					
53	1	982212-30080	BOLT	2	2	2					
54	1	982317-00070	BOLT	2	2	2					
55	1	129150-49100	COCK ASSY, 3-WAY	1	1	1					
56	1	982283-00840	HOSE	1	1	1					
57	1	982283-00870	HOSE	1	1	1					
58	1	982284-00016	CLAMP	4	4	4					
59	1	982217-30260	DRAIN, OIL	1	1	1					
60	1	982217-30420	JOINT	1	1	1					
61	1	982283-00680	HOSE	1	1	1					
62	1	982284-00025	CLIP	2	2	2					
63	1	26716-050002	NUT, M5	2	2	2					
64	1	982219-10050	WHEEL	2	2	2					
65	1	982219-10070	CASTER	2	2	2					
66	1	26116-100202	BOLT, M10X 20 PLATED	16	16	16					
67	1	26716-100002	NUT, M10	16	16	16					
68	1	982217-90620	CAP	1	1	1					

N:Old ◄Yes/No► New. Q:Old ◄No/Yes► New. R:Old ◄Yes/Yes► New. S:Old ◄No/No► New. W:Add. Z:Discontinued. F:Interchangeable by set. K:Q'ty Change

Copyright (C) YANMAR GLOBAL CS CO., LTD. All RightsReserved.

Fig.72. BONNET(TYPE BS)

(A)=YEG12SL
(B)=YEG16SL
(C)=YEG22SL
(D)=
(E)=
(F)=

No.	Lev.	Parts No.	Description	Q'ty (A)	(B)	(C)	(D)	(E)	(F)	I	R
1	1	982215-20534	BED, COMMON	1							
2	1	982215-20535	BED, COMMON		1						
3	1	982215-20536	BED, COMMON			1					
4	1	982247-00240	MOUNT, ENGINE	2	2	2					
5	1	982219-00580	RUBBER,CUSHION	4	4	4					
6	1	26116-100252	BOLT, M10X 25 PLATED	8	8	8					
7	1	22217-100000	WASHER, SPRING 10	24	24	24					
8	1	982215-20537	DUCT	1							
9	1	982215-20538	DUCT		1	1					
10	1	982215-20539	DUCT	1							
11	1	982215-20540	DUCT		1	1					
12	1	982319-60150	BOLT SET	45	45	45					
13	1	982319-60180	BOLT SET	43	43	43					
14	1	982215-20541	COVER	1	1	1					
15	1	982215-20542	PLATE	1	1	1					
16	1	982215-20543	COVER	1	1	1					
17	1	982215-20544	DUCT	1	1	1					
18	1	982215-20545	DUCT	1	1	1					
19	1	26116-060252	BOLT, M6X 25 PLATED	2	2	2					
20	1	982287-00180	CATCH, BALL	2	2	2					
21	1	982332-54010	SCREW	8	8	8					
22	1	982215-20546	COVER	1							
23	1	982215-20547	COVER		1	1					
24	1	982215-20548	COVER	1	1						
25	1	982215-20549	SHIELD	1	1	1					
26	1	982215-20550	SHIELD	1							
27	1	982215-20551	SHIELD		1	1					
28	1	982275-00450	SILENCER	1	1	1					
29	1	982277-00100	GASKET	1	1	1					
30	1	982277-00050	CLAMP	1	1	1					
31	1	26716-080002	NUT, M8	19	19	19					
32	1	982298-20010	PLATE	1							
33	1	982298-20020	BRACKET, RESERVOIR		1	1					
34	1	982319-60140	BOLT SET	2	2	2					
35	1	26716-060002	NUT, M6	2	2	2					
36	1	982215-20552	COVER	1							
37	1	982215-20553	COVER		1	1					
38	1	982217-90630	CAP	1	1	1					
39	1	982217-90620	CAP	1	1	1					
40	1	982217-90640	TANK, FUEL	1							
41	1	982217-90650	TANK, FUEL		1	1					
42	1	982217-90660	CAP	1	1	1					
43	1	982218-00250	BAND, TANK	2							
44	1	982218-00260	BAND, TANK		2	2					
45	1	982215-20555	LIFTER	1							
46	1	982215-20556	LIFTER		1	1					
47	1	982215-20557	LIFTER	1							
48	1	982274-00310	PIPE	1	1						
49	1	982274-00330	PIPE			1					
50	1	982215-20558	LIFTER		1	1					
51	1	982215-20559	BRACKET	1							

N:Old ◄Yes/No► New, Q:Old ◄No/Yes► New, R:Old ◄Yes/Yes► New, S:Old ◄No/No► New, W:Add, Z:Discontinued, F:Interchangeable by set, K:Q'ty Change

++ CONTINUE ++

Copyright (C) YANMAR GLOBAL CS CO., LTD. All RightsReserved.

Fig.72. BONNET(TYPE BS)

(A)=YEG12SL
(B)=YEG16SL
(C)=YEG22SL
(D)=
(E)=
(F)=

No.	Lev.	Parts No.	Description	Q'ty (A)	(B)	(C)	(D)	(E)	(F)	I	R
52	1	982215-20560	BRACKET		1	1					
53	1	982215-20561	BRACKET	1							
54	1	982215-20562	BRACKET		1	1					
55	1	982319-60270	BOLT SET	4	4	4					
56	1	26716-120002	NUT, M12	4	4	4					
57	1	982283-00700	HOSE	1							
58	1	982283-00720	HOSE		1	1					
59	1	982283-00710	HOSE	1							
60	1	982283-00730	HOSE		1	1					
61	1	982284-00080	CLAMP	4	4	4					
62	1	982215-20563	COVER	1							
63	1	982215-20564	COVER		1	1					
64	1	982215-20565	DUCT	1							
65	1	982215-20566	DUCT		1	1					
66	1	982215-20567	DUCT		1	1					
67	1	982319-60260	BOLT SET	8	8	8					
68	1	982215-20568	DOOR	1							
69	1	982215-20569	DOOR		1	1					
70	1	982215-20570	DOOR	1							
71	1	982215-20571	DOOR		1	1					
72	1	982287-00230	HANDLE	1	1	1					
73	1	982215-20572	HOLE, PEEP	1	1	1					
74	1	982215-20573	DUCT	1							
75	1	982215-20574	DUCT		1	1					
76	1	982215-20575	DUCT	2							
77	1	982215-20576	DUCT		2	2					
78	1	982286-00060	HINGE	6	6	6					
79	1	982336-08200	SCREW	4	4	4					
80	1	22217-080000	WASHER, SPRING 8	4	4	4					
81	1	982332-05010	SCREW	18	18	18					
82	1	982215-20577	DOOR	1	1	1					
83	1	982215-20578	HOLE, PEEP	1	1	1					
84	1	982287-00170	HANDLE	2	2	2					
85	1	982332-56016	SCREW	6	6	6					
86	1	982242-26000	WASHER	6	6	6					
87	1	982242-46000	WASHER	6	6	6					
88	1	26713-060002	NUT, M6	6	6	6					
89	1	982217-00040	BATTERY	1	1	1					
90	1	982212-30070	CLAMP	1	1	1					
91	1	982212-30080	BOLT	2	2	2					
92	1	982317-00070	BOLT	2	2	2					
93	1	121450-49110	COCK ASSY, 3-WAY	1	1	1					
94	1	982283-00880	HOSE	1	1	1					
95	1	982283-00910	HOSE	1	1	1					
96	1	982284-00016	CLAMP	4	4	4					
97	1	982217-30260	DRAIN, OIL	1	1	1					
98	1	982217-30220	JOINT	1	1	1					
99	1	982283-00750	HOSE	1	1	1					
100	1	982284-00025	CLIP	2	2	2					
101	1	26716-050002	NUT, M5	2	2	2					
102	1	982219-10050	WHEEL	2	2	2					

N:Old ◄Yes/No► New, Q:Old ◄No/Yes► New, R:Old ◄Yes/Yes► New, S:Old ◄No/No► New, W:Add, Z:Discontinued, F:Interchangeable by set, K:Q'ty Change

++ CONTINUE ++

Copyright (C) YANMAR GLOBAL CS CO., LTD. All RightsReserved.

Fig.72. BONNET(TYPE BS)

(A)=YEG12SL
(B)=YEG16SL
(C)=YEG22SL
(D)=
(E)=
(F)=

No.	Lev.	Parts No.	Description	Q'ty (A)	(B)	(C)	(D)	(E)	(F)	I	R
103	1	982219-10070	CASTER	2	2	2					
104	1	26116-100202	BOLT, M10X 20 PLATED	16	16	16					

N:Old ◄Yes/No► New. Q:Old ◄No/Yes► New. R:Old ◄Yes/Yes► New. S:Old ◄No/No► New. W:Add. Z:Discontinued. F:Interchangeable by set. K:Q'ty Change

Copyright (C) YANMAR GLOBAL CS CO., LTD. All RightsReserved.

Parts No. Index

Parts No.	Fig. No.	Ref. No.
101304-59020	14	35
	32	35
	52	35
101720-55750	14	28
	32	28
	52	28
102103-55520	14	23
	32	23
	52	23
103854-39140	14	34
	32	34
	52	34
104200-55321	14	4
		19
	32	4
		19
	52	4
		19
104200-55330	14	5
		20
	32	5
		20
	52	5
		20
104200-55341	14	21
	32	21
	52	21
104200-55750	14	6
		29
	32	6
		29
	52	6
		29
104200-92350	18	25
	36	31
	56	34
104200-92600	18	26
	36	32
	56	35
105010-39140	47	1
105025-59510	32	39
	52	39
105025-59530	31	42
	32	17
	51	42
	52	17
105025-59750	13	52
	14	17
106383-44720	16	16
	34	16

Parts No.	Fig. No.	Ref. No.
106383-44720	54	16
106383-44730	16	17
	34	17
	54	17
110250-55610	14	24
	32	24
	52	24
114250-53080	13	5
	31	5
	51	5
114250-53120	13	9
	31	9
	51	9
114250-53130	13	10
	31	10
	51	10
114250-53140	13	11
	31	11
	51	11
114250-53210	13	12
	31	12
	51	12
114250-53400	13	13
	31	13
	51	13
119131-18320	6	5
	24	5
	42	2
119259-44570	28	69
	48	69
119600-66840	50	71
119620-01750	3	3
	21	3
	39	3
119625-11871	4	25
	22	27
	36	6
	40	34
	56	6
119625-11880	4	26
	22	25
	36	7
	40	35
	56	7
119625-11900	4	27
	22	26
	40	36
119632-77920	17	9
	35	9
	55	9

Parts No.	Fig. No.	Ref. No.
119632-77920	58	116
	59	116
	60	116
	66	224
	67	224
	68	224
119643-66900	17	1
	35	1
	55	1
119643-77900	17	5
	35	5
	55	5
119650-77910	17	6
	35	6
	55	6
	58	115
	59	115
	60	115
	66	223
	67	223
	68	223
119653-77950	12	82
	30	82
	50	82
119660-61901	12	59
	30	59
	50	59
119660-77710	17	3
	35	3
	55	3
	58	118
	59	118
	60	118
	66	226
	67	226
	68	226
119660-77711	17	3 -1
	35	3 -1
	55	3 -1
119802-13650	42	6 -1
119802-13670	42	7 -1
119802-13820	42	8 -2
119810-51040	11	7
119810-53000	13	2
	31	2
119840-59560	13	39
	31	45
	51	45
119840-59570	13	40
	31	46

Parts No.	Fig. No.	Ref. No.
119840-59570	51	46
119843-61540	12	48
	30	48
	50	48
120130-11860	4	11
	22	11
	40	15
121023-01550	2	25
	20	25
	38	25
121111-21501	8	12
	26	12
	45	12
121250-44590	28	73
	48	73
121250-44901	10	39
	28	39
	48	39
121250-49121	10	67
	28	66
	48	66
121250-59550	13	38
	31	44
	51	44
121256-44600	10	52
	28	52
	48	52
121257-55720	14	25
	32	25
	52	25
121257-55731	14	26
	32	26
	52	26
121400-11340	4	22
	22	22
	36	12
	40	29
	56	12
121400-12540	5	21
	23	21
	41	21
121400-12560	5	22
	23	22
	41	22
121400-12570	5	23
	23	23
	41	23
121400-44910	10	63
	28	63
	48	63

Parts No. Index

Parts No.	Fig. No.	Ref. No.
121420-12511	5	12
	23	12
	41	12
121420-12540	5	15
	23	15
	41	15
121420-12550	5	16
	23	16
	41	16
121420-12561	5	17
	23	17
	41	17
121422-12530	5	14
	23	14
	41	14
121422-12570	5	18
	23	18
	41	18
121422-12580	5	19
	23	19
	41	19
121450-01560	2	6
	20	6
	38	6
121450-42450	10	38
	28	38
	48	38
121450-49110	10	65
	28	64
	48	64
	64	93
	72	93
121520-34810	9	14
	27	14
	46	14
121521-12400	5	6
	23	6
	41	6
121521-12500	5	11
	23	11
	41	11
121550-23200	8	30
	26	30
	45	30
121550-49111	10	18
	28	18
	48	18
121850-11860	10	1
	28	1
	48	1

Parts No.	Fig. No.	Ref. No.
121850-21680	8	11
	26	11
	45	11
121850-51960	2	13
	18	4
	20	13
	36	4
	38	13
	56	4
122117-51560	11	51
	29	51
	49	51
122710-51090	11	11
	29	11
	49	11
123682-44210	10	44
124064-55510	14	22
	32	22
	52	22
124066-59100	13	37
	14	14
	31	43
	32	14
	51	43
	52	14
124160-01751	2	7
	4	44
	20	7
	22	46
	38	7
	40	54
124160-01910	1	5
	19	5
		6
	37	5
		6
124160-11360	4	50
	22	56
	40	37
124160-39140	9	21
	27	29
	47	2
124160-39450	9	36
	27	28
	47	16
124223-39900	47	4
124240-01871	2	8
	20	8
	38	8
124240-01883	2	9

Parts No.	Fig. No.	Ref. No.
124240-01883	18	3
	20	9
	36	3
	38	9
	56	3
124450-44510	10	46
	28	46
	48	46
124450-44530	10	48
	28	48
	48	48
124450-44550	10	51
	28	51
	48	51
124450-44560	10	49
	28	49
	48	49
124460-11340	4	23
	22	23
	36	5
	40	30
	56	5
124465-44950	10	40
		42
	18	18
	28	40
		42
	36	20
	48	40
		42
	56	19
124550-21600	8	16
	26	16
	45	16
124550-51350	11	33
	29	33
	49	33
124550-51370	11	34
	29	34
	49	34
124550-59820	9	26
	27	34
	47	5
124550-66370	12	61
	30	61
	50	61
124701-11911	6	7
		17
	18	21
124736-07900	4	53

Parts No.	Fig. No.	Ref. No.
124736-07900	22	58
	40	6
124756-67510	12	85
	30	85
	50	85
124764-44800	10	61
	28	61
	48	61
124764-44810	10	62
	28	62
	48	62
124766-59050	13	51
	14	36
		37
		38
	31	41
	32	36
		37
		38
	51	41
	52	36
		37
		38
124770-11770	10	23
	28	23
	48	23
124950-51190	11	18
	29	18
	49	18
126650-12680	5	20
	23	20
	41	20
128270-13620	47	10
129001-02800	1	15
	19	15
	37	15
129001-11310	4	48
	18	7
129001-11340	4	49
129001-11350	4	45
129001-11700	4	7
129001-13100	6	1
129001-13110	6	2
	18	10
129001-21000	8	1
129001-32001	9	1
129001-35300	9	18
	27	24
	46	24
129002-01331	1	22

Parts No. Index

Parts No.	Fig. No.	Ref. No.
129002-01331	18	2
129002-22081	8	17
	26	17
129002-22090	45	17
129002-22500	8	19
	26	19
129002-22510	45	19
129002-22901	8	33
	26	33
129002-22910	45	33
129002-22950	8	35
	26	35
129002-22960	45	35
129052-61050	12	5
	30	5
	50	5
129052-61060	12	6
	30	6
	50	6
129052-61070	12	7
	30	7
	50	7
129052-61390	12	32
	30	32
	50	32
129100-01580	3	1
		15
	8	2
	21	1
		15
	26	2
	39	1
		15
	45	2
129100-01640	3	16
	21	16
	39	16
129100-01730	3	10
129100-01760	3	6
129100-11100	4	17
	22	17
	40	24
129100-11110	4	18
	22	18
129100-11130	40	25
129100-11240	4	30
129100-11650	4	37
	22	37
	40	45
129100-23910	8	29

Parts No.	Fig. No.	Ref. No.
129100-23910	26	29
	45	29
129100-25061	7	10
	25	9
	43	9
129100-35301	9	16
129100-42003	10	2
	28	2
	48	2
129100-42020	10	13
	18	13
	28	13
	36	17
	48	13
	56	17
129100-49800	10	22
	28	22
	48	22
129100-49820	10	25
	28	25
	36	21
	48	25
129100-49830	10	26
	28	26
	48	26
129100-49840	10	31
	18	16
	28	31
	36	19
	48	31
	56	15
129100-51300	11	28
	29	28
	49	28
129100-52100	11	97
	29	97
	49	97
129100-55621	14	1
	32	1
	52	1
129100-55650	14	11
	32	11
	52	11
129100-55670	14	3
	32	3
	52	3
129100-55680	14	8
	32	8
	52	8
129100-55690	14	9

Parts No.	Fig. No.	Ref. No.
129100-55690	32	9
	52	9
129100-55700	14	12
	32	12
	52	12
129100-59912	13	25
129100-59922	13	29
129100-59932	13	33
129100-59951	13	42
	31	48
	51	48
129100-61400	12	18
	30	18
	50	18
129100-61440	12	78
	30	78
	50	78
129111-13500	6	8
129111-13600	6	9
129111-13650	6	10
129111-13670	6	11
129111-13680	6	12
129111-44590	10	69
129111-67010	3	21
	21	21
	39	21
129115-91250	17	10
	35	10
	55	10
	58	114
	59	114
	60	114
	66	222
	67	222
	68	222
129115-91270	17	12
	35	12
	55	12
129120-44500	10	43
129120-44560	10	45
129120-77501	5	8
	23	8
	41	8
129122-12100	5	1
129129-14580	7	3
129129-77010	15	1
129129-77210	15	6
129129-77220	15	7
129129-77230	15	8
	33	8

Parts No.	Fig. No.	Ref. No.
129129-77230	53	8
129129-77240	15	9
	33	9
	53	9
129129-77250	15	10
129129-77260	15	21
	33	21
	53	21
129129-77270	15	22
	33	22
	53	22
129129-77280	15	23
129129-77290	15	24
	33	24
	53	24
129129-77300	15	25
129129-77310	15	27
129129-77320	15	28
	33	28
	53	28
129129-77330	15	29
129129-77340	15	30
	33	30
	53	30
129129-77350	15	31
	33	31
	53	31
129129-77362	15	32
	33	32
	53	32
129129-77380	15	34
	33	34
	53	34
129129-77390	15	14
129129-77400	15	17
	33	17
	53	17
129129-77410	15	18
	33	18
	53	18
129129-77420	15	19
	33	19
	53	19
129129-77430	15	20
	33	20
	53	20
129129-77460	15	3
	33	3
	53	3
129132-44530	28	71

Parts No. Index

Parts No.	Fig. No.	Ref. No.
129132-44530	48	71
129132-49050	10	36
	28	36
	48	36
129137-49100	10	64
	28	44
	48	44
129150-01200	1	21
	19	29
	37	28
129150-02020	1	7
	19	12
	37	12
129150-02450	7	4
	25	4
	43	4
129150-02870	1	23
	19	31
	37	30
129150-02930	1	18
	19	24
	37	24
129150-02940	1	26
	19	34
	37	33
129150-03020	22	47
	40	55
129150-03070	22	48
	40	56
129150-03080	22	49
	40	57
129150-03100	2	11
	20	11
	38	11
129150-11230	4	38
	22	38
	40	46
129150-11280	4	33
	22	33
	40	41
129150-11290	4	34
129150-11370	4	24
	22	24
	40	31
129150-11750	4	40
	22	40
	40	48
129150-11810	4	13
	22	13
	40	17

Parts No.	Fig. No.	Ref. No.
129150-12111	5	2
	18	9
129150-14101	7	7
	25	7
	43	7
129150-14200	7	1
	25	1
	43	1
129150-14400	7	2
	25	2
	43	2
129150-21200	8	5
	26	5
	45	5
129150-23600	8	31
	26	31
	45	31
129150-23610	8	39
	26	39
	45	39
129150-25101	7	11
	25	10
	43	10
129150-25900	7	16
	25	15
	43	15
129150-25920	7	14
	25	13
	43	13
129150-32020	9	29
	18	11
	27	17
	36	13
	46	17
	56	13
129150-35041	9	15
	18	20
	27	15
	36	14
	46	15
	56	14
129150-35042	27	15 -1
	46	15 -1
129150-35101	9	35
	27	21
	46	21
129150-35111	9	17
	18	12
	27	22
	36	16

Parts No.	Fig. No.	Ref. No.
129150-35111	46	22
	56	16
129150-35151	9	32
	27	23
	46	23
129150-35350	9	33
	27	25
	46	25
129150-39450	9	22
129150-49080	10	57
	28	57
	48	57
129150-49100	10	56
	28	56
	48	56
	62	33
	63	55
	70	33
	71	55
129150-49170	61	34
	69	34
129150-49811	10	30
	18	15
	28	30
	36	29
	48	30
	56	32
129150-59120	13	20
	31	20
	51	20
129150-59131	13	23
	31	23
	51	23
129150-59580	13	41
	14	15
	31	47
	32	15
	51	47
	52	15
129150-77511	5	9
	18	17
	23	9
	36	9
	41	9
	56	9
129155-11260	4	31
	22	31
	40	39
129155-11270	4	32
	22	32

Parts No.	Fig. No.	Ref. No.
129155-11270	40	40
129155-42350	10	16
	28	16
	48	16
129155-49800	10	29
	28	29
	48	29
129155-51020	11	6
	29	6
	49	6
129155-51050	11	9
	29	9
	49	9
129155-51060	11	10
	29	10
	49	10
129155-51140	11	15
	29	15
	49	15
129155-51180	11	17
	29	17
	49	17
129155-51200	11	19
	29	19
	49	19
129155-51270	11	26
	29	26
	49	26
129155-51280	11	27
	12	2
	29	27
	30	2
	49	27
	50	2
129155-51320	11	31
	29	31
	49	31
129155-51340	11	32
	29	32
	49	32
129155-51370	11	35
	29	35
	49	35
129155-51380	11	36
	29	36
	49	36
129155-51390	11	37
	29	37
	49	37
129155-51400	11	38

Parts No. Index

Parts No.	Fig. No.	Ref. No.
129155-51410	11	39
	29	39
	49	39
129155-51420	11	40
	29	40
	49	40
129155-51450	11	41
	29	41
	49	41
129155-51500	11	46
129155-51521	11	47
	29	47
	49	47
129155-51530	11	48
	29	48
	49	48
129155-51540	11	49
	29	49
	49	49
129155-51550	11	50
	29	50
	49	50
129155-51570	11	53
	29	53
	49	53
129155-51580	11	54
	29	54
	49	54
129155-51591	11	55
	29	55
	49	55
129155-51600	11	56
	29	56
	49	56
129155-51700	11	75
129155-51710	11	76
129155-51750	11	77
129155-51760	11	78
129155-51790	11	79
	29	79
	49	79
129155-51930	11	81
	29	81
	49	81
129155-51940	11	82
	29	82
	49	82
129155-52050	11	96
	29	96
	49	96

Parts No.	Fig. No.	Ref. No.
129155-61120	12	8
	30	8
	50	8
129155-61130	12	9
	30	9
	50	9
129155-61140	12	10
	30	10
	50	10
129155-61341	12	15
	30	15
	50	15
129155-61350	12	16
	30	16
	50	16
129155-61360	12	17
	30	17
	50	17
129155-61430	12	21
	30	21
	50	21
129155-61450	12	25
	30	25
	50	25
129155-61460	12	26
	30	26
	50	26
129155-61470	12	84
	30	84
	50	84
129155-61480	12	27
	30	27
	50	27
129155-61830	12	58
	30	58
	50	58
129155-61950	12	60
	30	60
	50	60
129156-51910	11	80
	29	80
	49	80
129202-22300	8	23
	26	23
	45	23
129211-49020	10	54
129335-55700	14	18
	32	18
	52	18
129350-49530	10	20

Parts No.	Fig. No.	Ref. No.
129350-49530	28	20
	48	20
129400-01520	2	5
	20	5
	38	5
129400-01730	21	10
	39	10
129400-01770	21	6
	39	6
129400-11350	22	45
	40	53
129400-13201	24	7
		17
	36	15
129400-59910	31	25
129400-59920	31	29
129400-59930	31	33
129400-59940	31	37
129400-77330	16	23
	34	23
	54	23
129400-92420	18	22
	36	37
	56	40
129403-13130	42	5
129403-13540	42	9
129403-18091	44	41
	56	30
129403-18800	44	20
129403-39450	47	3
129403-39600	47	11
129403-39610	47	12
129403-44740	28	17
129406-18010	44	1
129406-18770	44	2
129406-18780	44	11
129406-18790	44	15
129406-18820	44	23
129406-18830	44	26
129407-11700	22	7
129407-13100	24	1
129407-13110	24	2
	36	11
129407-21000	26	1
	45	1
129407-32000	27	1
	46	1
129407-77010	33	1
	53	1
129407-77210	33	6

Parts No.	Fig. No.	Ref. No.
129407-77210	53	6
129407-77220	33	7
	53	7
129407-77250	33	10
	53	10
129407-77280	33	23
	53	23
129407-77300	33	25
	53	25
129407-77310	33	27
	53	27
129407-77330	33	29
	53	29
129407-77390	33	14
	53	14
129407-77410	33	13
	53	13
129408-01330	19	30
	36	2
	37	29
	56	2
129408-44500	48	68
129411-13500	24	8
129411-13600	24	9
129411-13650	24	10
129411-13670	24	11
129411-13680	24	12
129411-44590	28	43
	48	43
129412-13500	42	13
129412-13600	42	4
129412-61500	12	33
	30	33
	50	33
129418-18320	42	2 -1
129420-44500	28	68
129420-44550	28	72
	48	72
129420-44560	28	45
	48	45
129420-59910	51	25
129420-59920	51	29
129420-59930	51	33
129420-59940	51	37
129432-44740	48	17
129436-35070	27	16 -1
	46	16 -1
129436-35091	27	16
	46	16
129470-11080	40	13

Parts No. Index

Parts No.	Fig. No.	Ref. No.
129470-11090	40	14
129470-51040	29	7
129470-51101	49	12
129477-18101	44	39
	56	31
129477-61720	12	81
	30	81
	50	81
129486-01670	3	19
	21	19
	39	19
129488-12050	41	4
129488-12060	41	29
129488-12100	23	1
	41	1
129500-11240	22	30
	40	38
129500-61650	12	80
	30	80
	50	80
129503-53000	51	2
129506-51040	49	7
129506-51100	11	12
	29	12
129550-11290	22	34
	40	42
129550-11310	22	52
	36	8
	40	60
	56	8
129550-12111	23	2
	36	10
	41	2
	56	10
129550-13110	42	1
	56	11
129550-21650	26	9
	45	9
129550-39450	27	30
129555-51400	29	38
	49	38
129555-51500	29	46
	49	46
129555-51700	29	75
	49	75
129555-51710	29	76
	49	76
129555-51750	29	77
	49	77
129555-51760	29	78

Parts No.	Fig. No.	Ref. No.
129555-51760	49	78
129555-59510	14	41
	32	41
	52	41
129612-59520	14	39
129688-01780	21	6 -1
	39	6 -1
129693-44310	42	8 -1
129795-01780	3	18
	21	18
	39	18
129795-01800	2	4
	20	4
	38	4
129795-01900	16	21
	34	21
	54	21
129795-01950	2	10
	20	10
	38	10
129795-02411	1	10
	19	27
	37	27
129795-11120	4	19
	22	19
	40	26
129795-11180	4	20
	22	20
	40	27
129795-21661	8	10
	26	10
	45	10
129795-49551	10	21
	18	14
	28	21
	36	18
	48	21
	56	18
129900-07900	4	53 -1
	22	58 -1
	40	6 -1
158552-61900	12	69 -1
	30	69 -1
	50	69 -1
170022-67100	17	2
170029-67100	35	2
	55	2
170038-91310	17	13
	35	13
	55	13

Parts No.	Fig. No.	Ref. No.
170038-91310	58	111
	59	111
	60	111
	66	219
	67	219
	68	219
171051-01921	1	6
	19	7
	37	7
171061-12520	5	13
	23	13
	41	13
171064-12600	5	7
	23	7
	41	7
171081-55910	14	30
	32	30
	52	30
171301-01640	3	8
	21	8
	39	8
171301-49010	10	53
171301-77201	16	1
	34	1
	54	1
171301-77720	17	4
	35	4
	55	4
171340-21590	8	13
171340-21650	8	9
171340-44740	10	17
171350-03090	4	1
	22	1
	40	1
171351-12210	5	4
	23	4
171351-12560	5	25
	23	25
	41	25
171351-12570	5	26
	23	26
	41	26
171351-12580	5	24
	23	24
	41	24
171353-44760	10	41
	28	41
	48	41
171420-01600	3	2
	21	2

Parts No.	Fig. No.	Ref. No.
171420-01600	39	2
171420-21590	26	13
	45	13
171420-34820	9	31
	27	19
	46	19
171420-49010	28	53
	48	53
171420-49020	28	54
	48	54
171488-61200	12	11
	30	11
	50	11
171488-61440	12	79
	30	79
	50	79
174307-51170	11	16
	29	16
	49	16
174307-51560	11	52
	29	52
	49	52
174307-51700	12	34
	30	34
	50	34
194990-22050	6	3
		13
	24	3
		13
	44	40
22117-040000	12	62
	30	62
	50	62
	57	65
	58	120
	59	120
	65	114
	66	228
	67	228
22117-050000	58	126
		134
	59	126
	60	126
	66	234
		242
	67	234
	68	234
22117-060000	57	75
	59	134
	60	134

Parts No. Index

Parts No.	Fig. No.	Ref. No.
22117-060000	62	32
	65	124
	67	242
	68	242
	70	32
22117-080000	63	48
	71	48
22117-120000	61	8
	69	8
22190-060002	12	63
	30	63
	50	63
22190-080002	2	12
		23
	20	12
		23
	27	35
	38	12
		23
	47	6
22190-100002	12	64
	30	64
	50	64
22190-120002	12	65
	14	40
	30	65
	32	40
	50	65
	52	40
22190-160002	11	91
	29	83
	49	83
22212-100000	16	18
	34	18
	54	18
22217-040000	57	64
	58	121
	59	121
	65	113
	66	229
	67	229
22217-050000	11	92
	29	84
	49	84
	58	127
	59	127
	60	127
	66	235
	67	235
	68	235

Parts No.	Fig. No.	Ref. No.
22217-060000	11	83
	29	85
	49	85
	57	74
	65	123
22217-080000	61	24
	62	21
	63	46
	64	80
	69	24
	70	21
	71	46
	72	80
22217-100000	57	58
		81
	61	12
	62	9
	63	7
	64	7
	65	107
		130
	69	12
	70	9
	71	7
	72	7
22217-120000	7	17
	25	16
	43	16
	61	9
	69	9
22252-000260	8	24
	26	24
	45	24
22272-000070	12	86
	30	86
	50	86
22287-120000	12	66
	30	66
	50	66
22351-040010	8	8
	26	8
	45	8
22351-050010	11	84
	29	86
	49	86
22351-060012	4	28
	22	28
	40	32
22372-040000	12	67
	30	67

Parts No.	Fig. No.	Ref. No.
22372-040000	50	67
22512-070140	7	8
	8	6
	25	8
	26	6
	43	8
	45	6
23000-016000	10	37
	28	37
	48	37
23000-022000	47	13
23000-050000	41	5
23000-060000	5	5
	23	5
23000-070000	41	30
23010-038000	10	55
	28	55
	48	55
23061-070230	10	50
	28	50
	48	50
23414-080000	9	27
	47	7
	56	21
23414-100000	9	28
	27	36
	36	23
	47	8
	56	22
23414-120000	13	50
	31	56
	36	22
	51	56
	56	20
23418-060000	14	31
	32	31
	52	31
23871-010000	1	11
	19	8
	37	8
23871-020000	40	19
23871-030000	10	12
		27
	19	28
	28	12
		27
	40	20
	48	12
		27
23887-100002	12	68

Parts No.	Fig. No.	Ref. No.
23887-100002	30	68
	50	68
24101-063034	11	85
	29	87
	49	87
24107-063074	57	76
	65	125
24311-000120	4	51
	18	6
	22	57
	36	24
	40	64
	56	23
24311-000160	2	14
	9	34
	10	68
	14	13
	18	8
	20	14
	27	26
	28	67
	32	13
	36	25
	38	14
	46	26
	48	67
	52	13
	56	24
24311-000320	2	15
	4	52
	18	5
	20	15
	22	53
	36	27
	38	15
	40	61
	56	26
		27
24311-240100	14	7
		32
	32	7
		32
	52	7
		32
24314-000160	47	14
	56	25
24321-000650	14	10
	32	10
	52	10
24341-000160	11	86

Parts No. Index

Parts No.	Fig. No.	Ref. No.
24341-000160	29	88
	49	88
24341-000240	2	26
	20	26
	36	26
	38	26
	56	29
24341-000250	3	9
	18	19
	21	9
	39	9
24341-000280	12	69
	30	69
	50	69
24341-000500	22	54
	36	28
	40	62
	56	28
25132-003700	10	15
	28	15
	48	15
26006-102502	57	57
	65	106
26014-060122	28	74
	48	74
26014-080252	16	24
	34	24
	54	24
26014-080302	6	14
	24	14
26014-080702	14	16
		33
	32	16
		33
	52	16
		33
26022-040252	16	8
	34	8
	54	8
26022-050102	11	87
	29	89
	49	89
26022-060162	11	88
	29	90
	49	90
26106-060102	12	70
		71
		72
	30	70
		71

Parts No.	Fig. No.	Ref. No.
26106-060102	30	72
	50	70
		72
26106-060122	2	27
	20	27
	38	27
26106-060142	12	73
	30	73
	50	73
26106-060162	47	15
26106-060202	12	74
	30	74
	50	74
26106-060352	10	19
	28	19
	48	19
26106-080102	47	9
26106-080122	2	16
	6	15
	20	16
	24	15
	38	16
	42	12
26106-080142	4	6
	5	27
	6	16
	7	9
	22	6
	23	27
	24	16
	40	7
	41	27
	42	3
26106-080162	2	17
		24
	3	12
		22
	20	17
		24
	21	12
		22
	22	55
	25	18
	38	17
		24
	39	12
		22
	40	63
	43	18
26106-080202	2	18

Parts No.	Fig. No.	Ref. No.
26106-080202	9	19
	10	32
	20	18
	27	27
	28	32
	38	18
	42	10
		11
	46	27
	48	32
26106-080252	3	13
	4	42
	5	3
	10	33
	21	13
	22	43
	28	33
	39	13
	40	51
	48	33
26106-080352	3	20
	5	10
	9	20
	21	20
	23	3
		10
	27	20
	39	20
	41	3
		10
	46	20
26106-080402	6	4
	24	4
26106-080452	2	19
	3	14
		14 -1
	7	15
	20	19
	21	14
		14 -1
	25	14
	38	19
	39	14
		14 -1
	43	14
26106-080502	3	24
	4	43
	10	34
	21	24
	22	44

Parts No.	Fig. No.	Ref. No.
26106-080502	28	34
	39	24
	40	52
	48	34
26106-080552	2	20
	20	20
	27	20 -1
	38	20
	46	20 -1
26106-080602	10	14
		35
	28	14
		35
	48	14
		35
26106-080652	42	6
26106-080852	2	21
	20	21
	38	21
	42	7
26106-081002	42	8
26116-050302	11	89
	29	91
	49	91
26116-050502	58	125
	59	125
	60	125
	66	233
	67	233
	68	233
26116-060162	10	28
	28	28
	48	28
26116-060252	64	19
	72	19
26116-060502	57	72
	65	121
26116-060602	57	73
	65	122
26116-080252	61	17
	69	17
26116-080302	63	47
	71	47
26116-100202	61	40
	63	66
	64	104
	69	40
	71	66
	72	104
26116-100250	62	8

Parts No. Index

Parts No.	Fig. No.	Ref. No.
26116-100250	70	8
26116-100252	63	6
	64	6
	71	6
	72	6
26116-100302	62	27
	70	27
26116-120252	15	35
	33	35
	53	35
26116-120752	61	7
	69	7
26206-100252	3	4
	21	4
	39	4
26206-100302	3	5
	21	5
	39	5
26216-060202	4	15
	22	15
	40	21
26216-080402	6	6
	24	6
26226-080182	4	41
	22	41
	40	49
26366-060002	4	29
	5	28
	22	29
	23	28
	40	33
	41	28
26366-080002	2	22
	12	77
	20	22
	30	77
	38	22
	50	77
26366-100002	16	22
	34	22
	54	22
26450-060252	9	30
	27	18
	46	18
26557-040402	57	63
	65	112
26687-120002	12	83
	30	83
	50	83
26713-060002	64	88

Parts No.	Fig. No.	Ref. No.
26713-060002	72	88
26716-030002	58	131
	59	131
	60	131
	66	239
		241
	67	239
	68	239
26716-040002	58	122
	59	122
	60	122
	63	14
	66	230
	67	230
	68	230
	71	14
26716-050002	58	128
	59	128
	60	128
	63	63
	64	101
	66	236
	67	236
	68	236
	71	63
	72	101
26716-060002	11	90
	29	92
	49	92
	58	133
	59	133
	60	133
	61	16
	62	13
	63	35
	64	35
	67	241
	68	241
	69	16
	70	13
	71	35
	72	35
26716-080002	59	144
	60	149
	61	18
	62	15
	63	28
	64	31
	67	262
	68	266

Parts No.	Fig. No.	Ref. No.
26716-080002	69	18
	70	15
	71	28
	72	31
26716-100002	16	19
	34	19
	54	19
	57	80
	61	41
	62	28
	63	67
	65	129
	69	41
	70	28
	71	67
26716-120002	7	18
	25	17
	43	17
	61	10
	64	56
	69	10
	72	56
26756-060002	12	75
	30	75
	50	75
26756-080002	22	42
	40	50
26776-120002	12	76
	30	76
	50	76
27231-500000	1	12
	19	9
	37	9
27241-120000	1	13
	19	10
	37	10
27241-220000	40	22
27241-300000	1	14
	19	11
	37	11
27241-400000	4	16
	22	16
	40	23
27310-080001	4	21
	22	21
	40	28
28110-100120	18	27
	36	33
	56	36
28110-140170	18	28

Parts No.	Fig. No.	Ref. No.
28110-140170	36	34
	56	37
28110-190220	18	29
	36	35
	56	38
28210-000140	18	30
	36	36
	56	39
719810-01500	2	1
	20	1
	38	1
719810-53100	13	1
	31	1
721400-92102	18	24
	36	30
	56	33
729002-01560	1	1
729002-51310	11	1
729002-92700	18	1
729218-51310	11	2
729402-14580	25	3
	43	3
729402-23100	8	25
	26	25
	45	25
729408-01560	19	1
	37	1
729408-11700	40	8
729408-51310	29	1
729408-92640	36	1
729418-51300	49	2
729418-92610	56	1
729503-53100	51	1
729613-51310	49	1
729618-51310	29	2
977770-01212	2	28
	3	23
	18	23
	20	28
	21	23
	36	38
	38	28
	39	23
	56	41
982110-20300	57	77
	65	126
982110-90100	57	70
	65	119
982110-90110	57	71
	65	120

Parts No. Index

Parts No.	Fig. No.	Ref. No.
982111-90020	57	69
	65	118
982112-00130	57	82
	65	52
982112-20160	57	28
	65	53
982116-90570	57	59
	65	108
982116-90580	57	60
	65	109
982116-90590	57	61
	65	110
982117-10011	57	62
	65	111
982117-40010	57	68
	65	117
982117-80172	57	1
982117-80173	57	2
982117-80174	57	3
982117-80175	57	4
982117-80176	57	5
982117-80177	57	6
982117-80178	57	7
982117-80179	57	8
982117-80180	57	9
982117-80181	57	10
982117-80182	57	11
982117-80183	57	12
982117-80184	57	13
982117-80185	57	14
982117-80186	57	15
982117-80187	57	16
982117-80188	57	17
982117-80189	57	18
982117-80190	57	19
982117-80191	57	20
982117-80192	57	21
982117-80193	57	22
982117-80194	57	23
982117-80195	57	24
982117-80196	57	25
982117-80197	57	26
982117-80198	57	27
982117-80277	65	1
982117-80278	65	2
982117-80279	65	3
982117-80280	65	4
982117-80281	65	5
982117-80282	65	6
982117-80283	65	7

Parts No.	Fig. No.	Ref. No.
982117-80284	65	8
982117-80285	65	9
982117-80286	65	10
982117-80287	65	11
982117-80288	65	12
982117-80289	65	13
982117-80290	65	14
982117-80291	65	15
982117-80292	65	16
982117-80293	65	17
982117-80294	65	18
982117-80295	65	19
982117-80296	65	20
982117-80297	65	21
982117-80298	65	22
982117-80299	65	23
982117-80300	65	24
982117-80301	65	25
982117-80302	65	26
982117-80303	65	27
982117-80304	65	28
982117-80305	65	29
982117-80306	65	30
982117-80307	65	31
982117-80308	65	32
982117-80309	65	33
982117-80310	65	34
982117-80311	65	35
982117-80312	65	36
982117-80313	65	37
982117-80314	65	38
982117-80315	65	39
982117-80316	65	40
982117-80317	65	41
982117-80318	65	42
982117-80319	65	43
982117-80320	65	44
982117-80321	65	45
982117-80322	65	46
982117-80323	65	47
982117-80324	65	48
982117-80325	65	49
982117-80326	65	50
982117-80327	65	51
982118-10590	57	78
	65	127
982118-10600	57	79
	65	128
982174-83110	57	29
982174-83120	57	30

Parts No.	Fig. No.	Ref. No.
982174-83130	57	31
982174-83140	57	32
982174-83150	57	33
982174-83160	57	34
982174-83170	57	35
982174-83180	57	36
982174-83190	57	37
982174-83200	57	38
982174-83210	57	39
982174-83220	57	40
982174-83230	57	41
982174-83240	57	42
982174-83250	57	43
982174-83260	57	44
982174-83270	57	45
982174-83280	57	46
982174-83290	57	47
982174-83300	57	48
982174-83310	57	49
982174-83320	57	50
982174-83330	57	51
982174-83340	57	52
982174-83350	57	53
982174-83360	57	54
982174-83370	57	55
982174-84180	65	54
982174-84190	65	55
982174-84200	65	56
982174-84210	65	57
982174-84220	65	58
982174-84230	65	59
982174-84240	65	60
982174-84250	65	61
982174-84260	65	62
982174-84270	65	63
982174-84280	65	64
982174-84290	65	65
982174-84300	65	66
982174-84310	65	67
982174-84320	65	68
982174-84330	65	69
982174-84340	65	70
982174-84350	65	71
982174-84360	65	72
982174-84370	65	73
982174-84380	65	74
982174-84390	65	75
982174-84400	65	76
982174-84410	65	77
982174-84420	65	78

Parts No.	Fig. No.	Ref. No.
982174-84430	65	79
982174-84440	65	80
982174-84450	65	81
982174-84460	65	82
982174-84470	65	83
982174-84480	65	84
982174-84490	65	85
982174-84500	65	86
982174-84510	65	87
982174-84520	65	88
982174-84530	65	89
982174-84540	65	90
982174-84550	65	91
982174-84560	65	92
982174-84570	65	93
982174-84580	65	94
982174-84590	65	95
982174-84600	65	96
982174-84610	65	97
982174-84620	65	98
982174-84630	65	99
982174-84640	65	100
982174-84650	65	101
982174-84660	65	102
982174-84670	65	103
982174-84680	65	104
982190-00030	57	56
	65	105
982210-40750	61	1
	69	1
982210-40760	61	2
	69	2
982210-40770	61	3
	69	3
982210-40830	62	1
	70	1
982210-40840	62	2
	70	2
982210-40850	62	3
	70	3
982210-40870	62	4
	70	4
982210-40880	62	5
	70	5
982212-30070	61	31
	62	30
	63	52
	64	90
	69	31
	70	30

Parts No. Index

Parts No.	Fig. No.	Ref. No.
982212-30070	71	52
	72	90
982212-30080	61	32
	62	31
	63	53
	64	91
	69	32
	70	31
	71	53
	72	91
982215-00870	60	119
	68	227
982215-00880	60	120
	68	228
982215-20466	63	1
	71	1
982215-20467	63	2
	71	2
982215-20468	63	3
	71	3
982215-20470	63	8
	71	8
982215-20472	63	9
	71	9
982215-20474	63	10
	71	10
982215-20485	63	11
	71	11
982215-20486	63	12
	71	12
982215-20488	63	15
	71	15
982215-20489	63	16
	71	16
982215-20492	63	29
	71	29
982215-20493	63	30
	71	30
982215-20495	63	36
	71	36
982215-20496	63	37
	71	37
982215-20498	63	39
	71	39
982215-20499	63	40
	71	40
982215-20500	63	42
	71	42
982215-20501	63	43
	71	43

Parts No.	Fig. No.	Ref. No.
982215-20534	64	1
	72	1
982215-20535	64	2
	72	2
982215-20536	64	3
	72	3
982215-20537	64	8
	72	8
982215-20538	64	9
	72	9
982215-20539	64	10
	72	10
982215-20540	64	11
	72	11
982215-20541	64	14
	72	14
982215-20542	64	15
	72	15
982215-20543	64	16
	72	16
982215-20544	64	17
	72	17
982215-20545	64	18
	72	18
982215-20546	64	22
	72	22
982215-20547	64	23
	72	23
982215-20548	64	24
	72	24
982215-20549	64	25
	72	25
982215-20550	64	26
	72	26
982215-20551	64	27
	72	27
982215-20552	64	36
	72	36
982215-20553	64	37
	72	37
982215-20555	64	45
	72	45
982215-20556	64	46
	72	46
982215-20557	64	47
	72	47
982215-20558	64	50
	72	50
982215-20559	64	51
	72	51

Parts No.	Fig. No.	Ref. No.
982215-20560	64	52
	72	52
982215-20561	64	53
	72	53
982215-20562	64	54
	72	54
982215-20563	64	62
	72	62
982215-20564	64	63
	72	63
982215-20565	64	64
	72	64
982215-20566	64	65
	72	65
982215-20567	64	66
	72	66
982215-20568	64	68
	72	68
982215-20569	64	69
	72	69
982215-20570	64	70
	72	70
982215-20571	64	71
	72	71
982215-20572	64	73
	72	73
982215-20573	64	74
	72	74
982215-20574	64	75
	72	75
982215-20575	64	76
	72	76
982215-20576	64	77
	72	77
982215-20577	64	82
	72	82
982215-20578	64	83
	72	83
982217-00040	61	30
	62	29
	63	51
	64	89
	69	30
	70	29
	71	51
	72	89
982217-30220	64	98
	72	98
982217-30260	63	59
	64	97

Parts No.	Fig. No.	Ref. No.
982217-30260	71	59
	72	97
982217-30420	63	60
	71	60
982217-90620	63	68
	64	39
	71	68
	72	39
982217-90630	63	31
	64	38
	71	31
	72	38
982217-90640	61	19
	62	16
	63	17
	64	40
	69	19
	70	16
	71	17
	72	40
982217-90650	61	20
	62	17
	63	18
	64	41
	69	20
	70	17
	71	18
	72	41
982217-90660	61	21
	62	18
	63	19
	64	42
	69	21
	70	18
	71	19
	72	42
982218-00140	61	22
	62	19
	69	22
	70	19
982218-00230	61	23
	62	20
	69	23
	70	20
982218-00250	63	20
	64	43
	71	20
	72	43
982218-00260	63	21
	64	44

Parts No. Index

Parts No.	Fig. No.	Ref. No.
982218-00260	71	21
	72	44
982219-00580	61	6
	62	7
	63	5
	64	5
	69	6
	70	7
	71	5
	72	5
982219-10050	61	38
	63	64
	64	102
	69	38
	71	64
	72	102
982219-10070	61	39
	63	65
	64	103
	69	39
	71	65
	72	103
982242-26000	64	86
	72	86
982242-46000	64	87
	72	87
982247-00200	61	4
	69	4
982247-00220	61	5
	69	5
982247-00240	62	6
	63	4
	64	4
	70	6
	71	4
	72	4
982274-00310	64	48
	72	48
982274-00330	64	49
	72	49
982275-00450	64	28
	72	28
982277-00050	64	30
	72	30
982277-00100	64	29
	72	29
982283-00680	63	61
	71	61
982283-00700	61	25
	62	22

Parts No.	Fig. No.	Ref. No.
982283-00700	63	22
	64	57
	69	25
	70	22
	71	22
	72	57
982283-00710	61	27
	62	24
	63	24
	64	59
	69	27
	70	24
	71	24
	72	59
982283-00720	61	26
	62	23
	63	23
	64	58
	69	26
	70	23
	71	23
	72	58
982283-00730	61	28
	62	25
	63	25
	64	60
	69	28
	70	25
	71	25
	72	60
982283-00750	64	99
	72	99
982283-00760	61	35
	69	35
982283-00790	61	36
	69	36
982283-00800	62	34
	70	34
982283-00830	62	35
	70	35
982283-00840	63	56
	71	56
982283-00870	63	57
	71	57
982283-00880	64	94
	72	94
982283-00910	64	95
	72	95
982284-00016	61	37
	62	36

Parts No.	Fig. No.	Ref. No.
982284-00016	63	58
	64	96
	69	37
	70	36
	71	58
	72	96
982284-00025	63	62
	64	100
	71	62
	72	100
982284-00080	61	29
	62	26
	63	26
	64	61
	69	29
	70	26
	71	26
	72	61
982286-00060	63	44
	64	78
	71	44
	72	78
982287-00170	64	84
	72	84
982287-00180	64	20
	72	20
982287-00210	60	135
	68	243
982287-00220	60	136
	68	244
982287-00230	63	41
	64	72
	71	41
	72	72
982298-20010	61	13
	62	10
	63	32
	64	32
	69	13
	70	10
	71	32
	72	32
982298-20020	61	14
	62	11
	63	33
	64	33
	69	14
	70	11
	71	33
	72	33

Parts No.	Fig. No.	Ref. No.
982315-10430	58	124
	59	124
	60	124
	66	232
	67	232
	68	232
982317-00070	58	137
	59	137
	61	33
	63	54
	64	92
	66	245
	67	245
	69	33
	71	54
	72	92
982319-60080	58	130
	59	130
	60	130
	66	238
		240
	67	238
	68	238
982319-60130	59	142
	67	260
982319-60140	58	132
	59	132
	60	132
	61	15
	62	12
	63	34
	64	34
	67	240
	68	240
	69	15
	70	12
	71	34
	72	34
982319-60150	59	143
	60	148
	64	12
	67	261
	68	265
	72	12
982319-60160	58	123
	59	123
	60	123
	63	13
	66	231
	67	231

Parts No. Index

Parts No.	Fig. No.	Ref. No.
982319-60160	68	231
	71	13
982319-60180	58	129
	59	129
	60	129
	63	49
	64	13
	66	237
	67	237
	68	237
	71	49
	72	13
982319-60240	60	121
	68	229
982319-60250	61	11
	62	14
	63	27
	69	11
	70	14
	71	27
982319-60260	63	38
	64	67
	71	38
	72	67
982319-60270	64	55
	72	55
982330-00480	58	119
	59	119
	66	227
	67	227
982332-05010	63	50
	64	81
	71	50
	72	81
982332-54010	64	21
	72	21
982332-56016	64	85
	72	85
982336-08200	63	45
	64	79
	71	45
	72	79
982510-50010	66	103
	67	103
	68	103
982510-50080	66	105
	67	105
	68	105
982510-50540	58	56
	59	56

Parts No.	Fig. No.	Ref. No.
982510-50540	60	56
982510-50550	58	55
	59	55
	60	55
	66	104
	67	104
	68	104
982510-80056	58	57
	59	57
	60	57
	66	107
	67	107
	68	107
982510-80220	66	106
		108
	67	106
		108
	68	106
		108
982511-00200	58	66
	59	66
	60	66
	66	120
	67	120
	68	120
982511-50320	58	103
	59	103
	60	103
982511-50670	66	197
	67	197
	68	197
982511-50680	66	198
	67	198
	68	198
982511-60010	66	109
		111
	67	109
		111
	68	109
		111
982511-60020	58	58
	59	58
	60	58
	66	110
	67	110
	68	110
982511-90060	58	59
	59	59
	60	59
	66	112

Parts No.	Fig. No.	Ref. No.
982511-90060	67	112
	68	112
982512-10040	57	66
	65	115
982512-10050	57	67
	65	116
982512-50260	58	68
		71
		73
	59	68
		71
		73
	60	68
		71
		73
982512-50270	58	70
		72
	59	70
		72
	60	70
		72
982512-50330	58	67
		69
		75
	59	67
		69
		75
	60	67
		69
		75
982512-50410	58	74
	59	74
	60	74
982512-50710	66	121
		122
		123
		125
		127
		129
	67	121
		122
		123
		125
		127
		129
	68	121
		122
		123
		125
		127

Parts No.	Fig. No.	Ref. No.
982512-50710	68	129
982512-50720	66	124
		126
		128
		131
		133
		134
	67	124
		126
		128
		131
		133
		134
	68	124
		126
		128
		131
		133
		134
982512-50730	66	130
		132
		135
		136
		137
		140
		142
	67	130
		132
		135
		136
		137
		140
		142
	68	130
		132
		135
		136
		137
		140
		142
982512-50740	66	138
		139
		141
		143
		144
		145
	67	138
		139
		141
		143

Parts No. Index

Parts No.	Fig. No.	Ref. No.
982512-50740	67	144
		145
	68	138
		139
		141
		143
		144
		145
982513-80010	58	60
		62
	59	60
		62
	60	60
		62
982513-80020	58	63
		65
	59	63
		65
	60	63
		65
982513-80040	58	61
	59	61
	60	61
	66	115
		116
	67	115
		116
	68	115
		116
982513-80060	58	64
	59	64
	60	64
982513-80090	66	117
	67	117
	68	117
982513-80130	66	114
		118
		119
	67	114
		118
		119
	68	114
		118
		119
982513-80410	66	261
	67	263
	68	267
982513-80420	66	262
	67	264
	68	268

Parts No.	Fig. No.	Ref. No.
982513-90050	58	104
		105
		107
		110
	59	104
		105
		107
		110
	60	104
		105
		107
		110
	66	200
		201
		205
		207
	67	200
		201
		205
		207
	68	200
		201
		205
		207
982513-90060	58	106
		108
	59	106
		108
	60	106
		108
	66	204
		206
		209
		210
		213
		215
	67	204
		206
		209
		210
		213
		215
	68	204
		206
		209
		210
		213
		215
982513-90070	58	109
	59	109

Parts No.	Fig. No.	Ref. No.
982513-90070	60	109
	66	199
		203
		212
		214
		217
		218
	67	199
		203
		212
		214
		217
		218
	68	199
		203
		212
		214
		217
		218
982513-90080	66	202
		208
	67	202
		208
	68	202
		208
982513-90150	66	211
		216
	67	211
		216
	68	211
		216
982514-00040	58	117
	59	117
	60	117
	66	225
	67	225
	68	225
982514-10100	58	113
	59	113
	60	113
	66	221
	67	221
	68	221
982514-20270	66	113
	67	113
	68	113
982515-60020	58	30
		31
		32
		35

Parts No.	Fig. No.	Ref. No.
982515-60020	58	36
	59	30
		31
		32
		35
		36
	60	30
		31
		32
		35
		36
982515-60030	58	34
		39
		40
		41
		44
		45
	59	34
		39
		40
		41
		44
		45
	60	34
		39
		40
		41
		44
		45
982515-60040	58	28
		29
		33
		37
		38
		43
		48
		49
		50
		52
		53
		54
	59	28
		29
		33
		37
		38
		43
		48
		49
		50

Parts No. Index

Parts No.	Fig. No.	Ref. No.
982515-60040	59	52
		53
		54
	60	28
		29
		33
		37
		38
		43
		48
		49
		50
		52
		53
		54
	66	54
		55
		56
		57
		65
	67	54
		55
		56
		57
		65
	68	54
		55
		56
		57
		65
982515-60050	58	42
		46
		47
	59	42
		46
		47
	60	42
		46
		47
	66	63
		64
		71
		72
		73
		74
		80
		81
		82
		90
		91

Parts No.	Fig. No.	Ref. No.
982515-60050	67	63
		64
		71
		72
		73
		74
		80
		81
		82
		90
		91
	68	63
		64
		71
		72
		73
		74
		80
		81
		82
		90
		91
982515-60060	58	51
	59	51
	60	51
	66	52
		53
		62
		88
		89
		97
		98
		99
	67	52
		53
		62
		88
		89
		97
		98
		99
	68	52
		53
		62
		88
		89
		97
		98
		99
982515-60070	66	60

Parts No.	Fig. No.	Ref. No.
982515-60070	66	61
		69
		70
		77
		78
		79
	67	60
		61
		69
		70
		77
		78
		79
	68	60
		61
		69
		70
		77
		78
		79
982515-60080	66	86
		87
		94
		95
		96
	67	86
		87
		94
		95
		96
	68	86
		87
		94
		95
		96
982515-60120	66	58
		59
		68
	67	58
		59
		68
	68	58
		59
		68
982515-60130	66	66
		67
		75
		76
		83
		84

Parts No.	Fig. No.	Ref. No.
982515-60130	66	85
		93
	67	66
		67
		75
		76
		83
		84
		85
		93
	68	66
		67
		75
		76
		83
		84
		85
		93
982515-60140	66	92
		100
		101
		102
	67	92
		100
		101
		102
	68	92
		100
		101
		102
982515-71000	58	138
982515-71010	58	139
982515-71020	58	140
982515-71070	58	141
	66	259
982515-71080	58	142
	66	260
982515-71090	59	138
982515-71100	59	139
982515-71110	59	140
982515-71160	59	141
	60	137
	67	259
982515-71170	60	138
982515-71180	60	139
982515-71230	60	140
	68	269
982515-71240	60	141
982515-71250	60	142
982515-71260	60	143

Parts No. Index

Parts No.	Fig. No.	Ref. No.
982515-71310	60	144
	68	270
982515-71320	60	145
982515-71330	60	146
982515-71340	60	147
982515-71390	66	246
982515-71400	66	247
982515-71410	66	248
982515-71450	66	249
982515-71460	66	250
982515-71470	66	251
982515-71480	66	252
982515-71490	66	253
982515-71500	66	254
982515-71510	66	255
982515-71520	66	256
982515-71530	66	257
982515-71540	66	258
982515-71610	67	246
982515-71620	67	247
982515-71630	67	248
982515-71670	67	249
982515-71680	67	250
982515-71690	67	251
982515-71700	67	252
982515-71710	67	253
982515-71720	67	254
982515-71730	67	255
982515-71740	67	256
982515-71750	67	257
982515-71760	67	258
982515-71850	68	245
982515-71860	68	246
982515-71870	68	247
982515-71880	68	248
982515-71890	68	249
982515-71900	68	250
982515-71910	68	251
		254
		255
		256
982515-71920	68	252
		253
		257
982515-71940	68	258
		261
		262
		263
982515-71950	68	259
		260

Parts No.	Fig. No.	Ref. No.
982515-71950	68	264
982517-70100	58	112
	59	112
	60	112
	66	220
	67	220
	68	220
982518-60240	58	135
	59	135
	66	243
	67	243
982518-60250	58	136
	59	136
	66	244
	67	244
982519-31410	58	1
982519-31420	58	2
982519-31430	58	3
982519-31440	58	4
982519-31450	58	5
982519-31460	58	6
982519-31470	58	7
982519-31480	58	8
982519-31490	58	9
982519-31500	58	10
982519-31510	58	11
982519-31520	58	12
982519-31530	58	13
982519-31540	58	14
982519-31550	58	15
982519-31560	58	16
982519-31570	58	17
982519-31580	58	18
982519-31590	58	19
982519-31600	58	20
982519-31610	58	21
982519-31620	58	22
982519-31630	58	23
982519-31640	58	24
982519-31650	58	25
982519-31660	58	26
982519-31670	58	27
982519-32090	59	1
982519-32100	59	2
982519-32110	59	3
982519-32120	59	4
982519-32130	59	5
982519-32140	59	6
982519-32150	59	7
982519-32160	59	8

Parts No.	Fig. No.	Ref. No.
982519-32170	59	9
982519-32180	59	10
982519-32190	59	11
982519-32200	59	12
982519-32210	59	13
982519-32220	59	14
982519-32230	59	15
982519-32240	59	16
982519-32250	59	17
982519-32260	59	18
982519-32270	59	19
982519-32280	59	20
982519-32290	59	21
982519-32300	59	22
982519-32310	59	23
982519-32320	59	24
982519-32330	59	25
982519-32340	59	26
982519-32350	59	27
982519-32770	60	1
982519-32780	60	2
982519-32790	60	3
982519-32800	60	4
982519-32810	60	5
982519-32820	60	6
982519-32830	60	7
982519-32840	60	8
982519-32850	60	9
982519-32860	60	10
982519-32870	60	11
982519-32880	60	12
982519-32890	60	13
982519-32900	60	14
982519-32910	60	15
982519-32920	60	16
982519-32930	60	17
982519-32940	60	18
982519-32950	60	19
982519-32960	60	20
982519-32970	60	21
982519-32980	60	22
982519-32990	60	23
982519-33000	60	24
982519-33010	60	25
982519-33020	60	26
982519-33030	60	27
982519-33800	66	1
982519-33810	66	2
982519-33820	66	3
982519-33830	66	4

Parts No.	Fig. No.	Ref. No.
982519-33840	66	5
982519-33850	66	6
982519-33860	66	7
982519-33870	66	8
982519-33880	66	9
982519-33890	66	10
982519-33900	66	11
982519-33910	66	12
982519-33920	66	13
982519-33930	66	14
982519-33940	66	15
982519-33950	66	16
982519-33960	66	17
982519-33970	66	18
982519-33980	66	19
982519-33990	66	20
982519-34000	66	21
982519-34010	66	22
982519-34020	66	23
982519-34030	66	24
982519-34040	66	25
982519-34050	66	26
982519-34060	66	27
982519-34070	66	28
982519-34080	66	29
982519-34090	66	30
982519-34100	66	31
982519-34110	66	32
982519-34120	66	33
982519-34130	66	34
982519-34140	66	35
982519-34150	66	36
982519-34160	66	37
982519-34170	66	38
982519-34180	66	39
982519-34190	66	40
982519-34200	66	41
982519-34210	66	42
982519-34220	66	43
982519-34230	66	44
982519-34240	66	45
982519-34250	66	46
982519-34260	66	47
982519-34270	66	48
982519-34280	66	49
982519-34290	66	50
982519-34300	66	51
982519-35070	67	1
982519-35080	67	2
982519-35090	67	3

Parts No. Index

Parts No.	Fig. No.	Ref. No.
982519-35100	67	4
982519-35110	67	5
982519-35120	67	6
982519-35130	67	7
982519-35140	67	8
982519-35150	67	9
982519-35160	67	10
982519-35170	67	11
982519-35180	67	12
982519-35190	67	13
982519-35200	67	14
982519-35210	67	15
982519-35220	67	16
982519-35230	67	17
982519-35240	67	18
982519-35250	67	19
982519-35260	67	20
982519-35270	67	21
982519-35280	67	22
982519-35290	67	23
982519-35300	67	24
982519-35310	67	25
982519-35320	67	26
982519-35330	67	27
982519-35340	67	28
982519-35350	67	29
982519-35360	67	30
982519-35370	67	31
982519-35380	67	32
982519-35390	67	33
982519-35400	67	34
982519-35410	67	35
982519-35420	67	36
982519-35430	67	37
982519-35440	67	38
982519-35450	67	39
982519-35460	67	40
982519-35470	67	41
982519-35480	67	42
982519-35490	67	43
982519-35500	67	44
982519-35510	67	45
982519-35520	67	46
982519-35530	67	47
982519-35540	67	48
982519-35550	67	49
982519-35560	67	50
982519-35570	67	51
982519-36340	68	1
982519-36350	68	2

Parts No.	Fig. No.	Ref. No.
982519-36360	68	3
982519-36370	68	4
982519-36380	68	5
982519-36390	68	6
982519-36400	68	7
982519-36410	68	8
982519-36420	68	9
982519-36430	68	10
982519-36440	68	11
982519-36450	68	12
982519-36460	68	13
982519-36470	68	14
982519-36480	68	15
982519-36490	68	16
982519-36500	68	17
982519-36510	68	18
982519-36520	68	19
982519-36530	68	20
982519-36540	68	21
982519-36550	68	22
982519-36560	68	23
982519-36570	68	24
982519-36580	68	25
982519-36590	68	26
982519-36600	68	27
982519-36610	68	28
982519-36620	68	29
982519-36630	68	30
982519-36640	68	31
982519-36650	68	32
982519-36660	68	33
982519-36670	68	34
982519-36680	68	35
982519-36690	68	36
982519-36700	68	37
982519-36710	68	38
982519-36720	68	39
982519-36730	68	40
982519-36740	68	41
982519-36750	68	42
982519-36760	68	43
982519-36770	68	44
982519-36780	68	45
982519-36790	68	46
982519-36800	68	47
982519-36810	68	48
982519-36820	68	49
982519-36830	68	50
982519-36840	68	51
982715-00060	58	76

Parts No.	Fig. No.	Ref. No.
982715-00060	59	76
	60	76
982715-00061	58	77
	59	77
	60	77
982715-00064	58	78
	59	78
	60	78
982715-00065	58	79
	59	79
	60	79
982715-00066	58	80
	59	80
	60	80
982715-00070	58	85
	59	85
	60	85
982715-00071	58	86
	59	86
	60	86
982715-00074	58	87
	59	87
	60	87
982715-00075	58	88
	59	88
	60	88
982715-00076	58	89
	59	89
	60	89
982715-00080	58	94
	59	94
	60	94
982715-00081	58	95
	59	95
	60	95
982715-00084	58	96
	59	96
	60	96
982715-00085	58	97
	59	97
	60	97
982715-00086	58	98
	59	98
	60	98
982715-00560	66	146
	67	146
	68	146
982715-00561	66	147
		152
	67	147

Parts No.	Fig. No.	Ref. No.
982715-00561	67	152
	68	147
		152
982715-00562	66	153
	67	153
	68	153
982715-00564	66	148
	67	148
	68	148
982715-00565	66	149
	67	149
	68	149
982715-00566	66	150
	67	150
	68	150
982715-00567	66	151
	67	151
	68	151
982715-00570	66	163
	67	163
	68	163
982715-00571	66	164
		169
	67	164
		169
	68	164
		169
982715-00572	66	170
	67	170
	68	170
982715-00574	66	165
	67	165
	68	165
982715-00575	66	166
	67	166
	68	166
982715-00576	66	167
	67	167
	68	167
982715-00577	66	168
	67	168
	68	168
982715-00580	66	180
	67	180
	68	180
982715-00581	66	181
		186
	67	181
		186
	68	181

Parts No. Index

Parts No.	Fig. No.	Ref. No.
982715-00581	68	186
982715-00582	66	187
	67	187
	68	187
982715-00584	66	182
	67	182
	68	182
982715-00585	66	183
	67	183
	68	183
982715-00586	66	184
	67	184
	68	184
982715-00587	66	185
	67	185
	68	185
982716-00061	58	81
	59	81
	60	81
982716-00064	58	82
	59	82
	60	82
982716-00067	58	83
	59	83
	60	83
982716-00068	58	84
	59	84
	60	84
982716-00071	58	90
	59	90
	60	90
982716-00074	58	91
	59	91
	60	91
982716-00077	58	92
	59	92
	60	92
982716-00078	58	93
	59	93
	60	93
982716-00081	58	99
	59	99
	60	99
982716-00084	58	100
	59	100
	60	100
982716-00087	58	101
	59	101
	60	101
982716-00088	58	102

Parts No.	Fig. No.	Ref. No.
982716-00088	59	102
	60	102
982716-00561	66	154
		160
	67	154
		160
	68	154
		160
982716-00562	66	155
		161
	67	155
		161
	68	155
		161
982716-00563	66	156
		162
	67	156
		162
	68	156
		162
982716-00565	66	157
	67	157
	68	157
982716-00566	66	158
	67	158
	68	158
982716-00567	66	159
	67	159
	68	159
982716-00571	66	171
		177
	67	171
		177
	68	171
		177
982716-00572	66	172
		178
	67	172
		178
	68	172
		178
982716-00573	66	173
		179
	67	173
		179
	68	173
		179
982716-00575	66	174
	67	174
	68	174

Parts No.	Fig. No.	Ref. No.
982716-00576	66	175
	67	175
	68	175
982716-00577	66	176
	67	176
	68	176
982716-00581	66	188
		194
	67	188
		194
	68	188
		194
982716-00582	66	189
		195
	67	189
		195
	68	189
		195
982716-00583	66	190
		196
	67	190
		196
	68	190
		196
982716-00585	66	191
	67	191
	68	191
982716-00586	66	192
	67	192
	68	192
982716-00587	66	193
	67	193
	68	193
X0280210230	15	11
	33	11
	53	11
X0283060061	15	2
	33	2
	53	2
X0283270140	15	12
	33	12
	53	12
X9490561370	15	4
	33	4
	53	4
X9491200240	15	5
	33	5
	53	5
X9491703371	15	13
X9491730461	15	26

Parts No.	Fig. No.	Ref. No.
X9491730461	33	26
	53	26
XM08137	16	2
	34	2
	54	2
XM08180	16	4
	34	4
	54	4
XM17878	16	6
	34	6
	54	6
XM27436	16	5
	34	5
	54	5
XM36410	16	7
	34	7
	54	7
XM82184	16	10
	34	10
	54	10
XYSPS4008	16	9
	34	9
	54	9