YANMAR

PARTS CATALOG

0CD50-M02480EN

Last update Apr., 2020

PREFACE

This parts catalog is the 1st edition of 4TNV94L-BVTYW for Trysun.

Published : July, 2016

Contents

0CD50-M02480

Fig. No.	Fig. Name
ENGINE	
1.	CYLINDER BLOCK
2.	GEAR HOUSING
3.	FLYWHEEL HOUSING & OIL SUMP
4.	CYLINDER HEAD & BONNET
5.	SUCTION MANIFOLD & AIR CLEANER
6.	EXHAUST MANIFOLD
7.	CAMSHAFT & DRIVING GEAR
8.	CRANKSHAFT & PISTON
9.	LUB. OIL SYSTEM
10.	COOLING WATER SYSTEM
11.	FUEL INJECTION PUMP
12.	GOVERNOR
13.	FUEL INJECTION VALVE
14.	FUEL PIPE
15.	STARTER MOTOR
16.	GENERATOR
17.	ACCESSORY

Fig.1. CYLINDER BLOCK

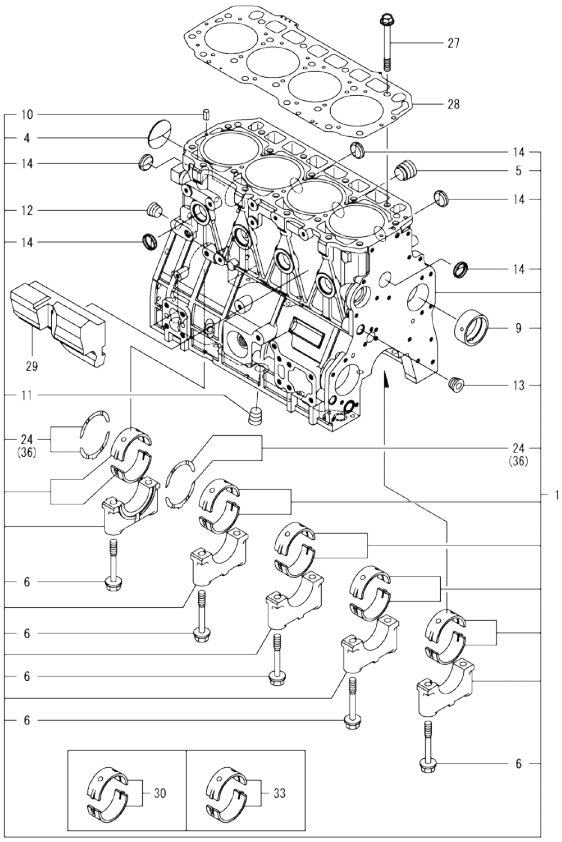

Remarks
(1)Spare parts.
(2)Under-sized(U.S.=0.25) parts.
(3)Over-sized(O.S.=0.25) parts.

(A)=4TNV94L-BVTYW (D)=
(B)= (E)=
(C)= (F)=

No.	Lev.	Parts No.	Description	Q'ty (A)	(B)	(C)	(D)	(E)	(F)	I	R
1	1	729906-01561	BLOCK ASSY, CYLINDER	1							
4	2	129900-01250	PLUG, DISH TYPE 55	1							
5	2	171051-01921	PLUG, NPTF1	1							
6	2	129900-02020	BOLT, METAL CAP	10							
9	2	129900-02410	BUSH, CAMSHAFT	1							
10	2	22351-060012	PIN, SPRING 6.0X12	2							
11	2	23876-030000	PLUG, R03	1							
12	2	23876-030000	PLUG, R03	1							
13	2	23876-030000	PLUG, R03	1							
14	2	27241-300000	PLUG 30	8							
24	2	129900-02931	BEARING ASSY, THRUST	2							
27	1	129900-01200	BOLT, CYLINDER HEAD	18							
28	1	129906-01350	GASKET, HEAD	1							
29	1	129907-01190	SPACER	1							
30	1	729900-02801	BEARING, MAIN	5							1
33	1	129900-02341	BEARING ASSY, MAIN	5							2
36	1	129900-02941	BEARING, THRUST 0.25	2							3

N:Old ←Yes/No→ New. Q:Old ←No/Yes→ New. R:Old ←Yes/Yes→ New. S:Old ←No/No→ New. W:Add. Z:Discontinued. F:Interchangeable by set. K:Q'ty Change

Copyright (C) 2016 YANMAR GLOBAL CS CO., LTD. All RightsReserved.

Fig.2. GEAR HOUSING

(A)=4TNV94L-BVTYW
(B)=
(C)=
(D)=
(E)=
(F)=

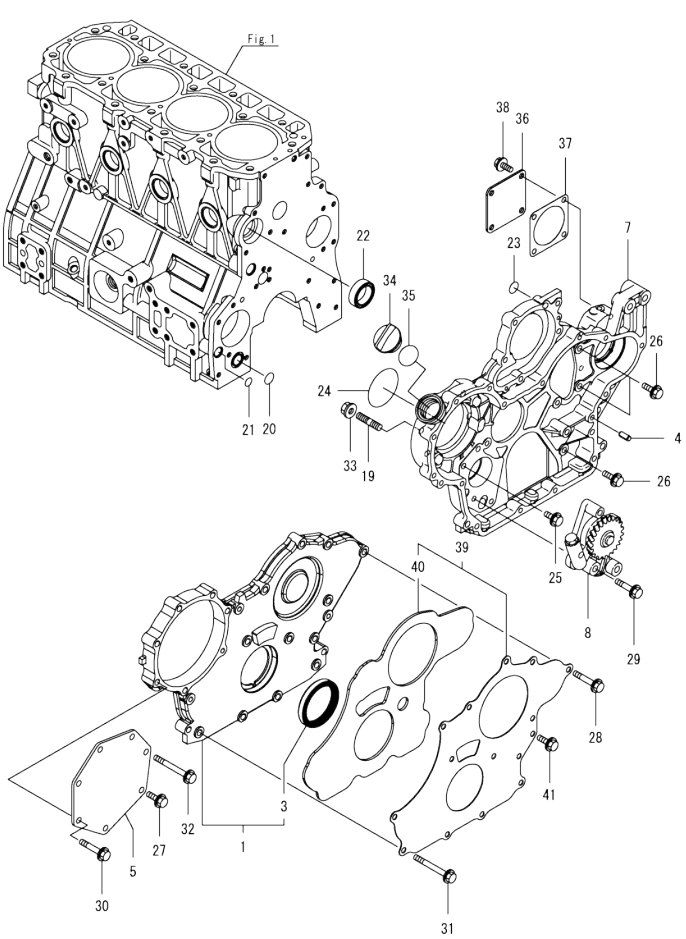

No.	Lev.	Parts No.	Description	Q'ty (A)	(B)	(C)	(D)	(E)	(F)	I	R
1	1	729907-01559	COVER ASSY,GEAR CASE	1							
3	2	129916-01800	SEAL, OIL	1							
4	1	129100-01580	PIN, PARALLEL 8X16	4							
5	1	129951-01740	COVER	1							
7	1	129907-01500	CASE, GEAR	1							
8	1	129900-32001	PUMP ASSY, OIL	1							
19	1	26216-100302	STUD, M10X 30	4							
20	1	129900-32030	O-RING, P20	1							
21	1	129900-32040	O-RING, P14	1							
22	1	129927-42140	GASKET, CW-P OUT	1							
23	1	24311-000070	O-RING, 1AP7.0	1							
24	1	24351-030750	O-RING, 1A3075	1							
25	1	26106-080162	BOLT, M8X 16 PLATED	1							
26	1	26106-080202	BOLT, M8X 20 PLATED	3							
27	1	26106-080202	BOLT, M8X 20 PLATED	1							
28	1	26106-080402	BOLT, M8X 40 PLATED	5							
29	1	26106-080452	BOLT, M8X 45 PLATED	3							
30	1	26106-080452	BOLT, M8X 45 PLATED	5							
31	1	26106-080702	BOLT, M8X 70 PLATED	6							
32	1	26106-080752	BOLT, M8X 75 PLATED	1							
33	1	26306-100002	NUT, M10	4							
34	1	124160-01751	CAP, FILLER	1							
35	1	24311-000320	O-RING, 1AP32.0	1							
36	1	124240-01871	COVER, PUMP	1							
37	1	129C26-01890	GASKET, HO-P	1							
38	1	26106-080162	BOLT, M8X 16 PLATED	4							
39	1	129900-01850	COVER ASSY,GEAR CASE	1							
40	2	129900-01870	SPONGE, GEAR CASE	1							
41	1	26106-080162	BOLT, M8X 16 PLATED	3							

N:Old ◄Yes/No► New. Q:Old ◄No/Yes► New, R:Old ◄Yes/Yes► New, S:Old ◄No/No► New. W:Add. Z:Discontinued. F:Interchangeable by set. K:Q'ty Change

Copyright (C) 2016 YANMAR GLOBAL CS CO., LTD. All RightsReserved.

Fig.3. FLYWHEEL HOUSING & OIL SUMP

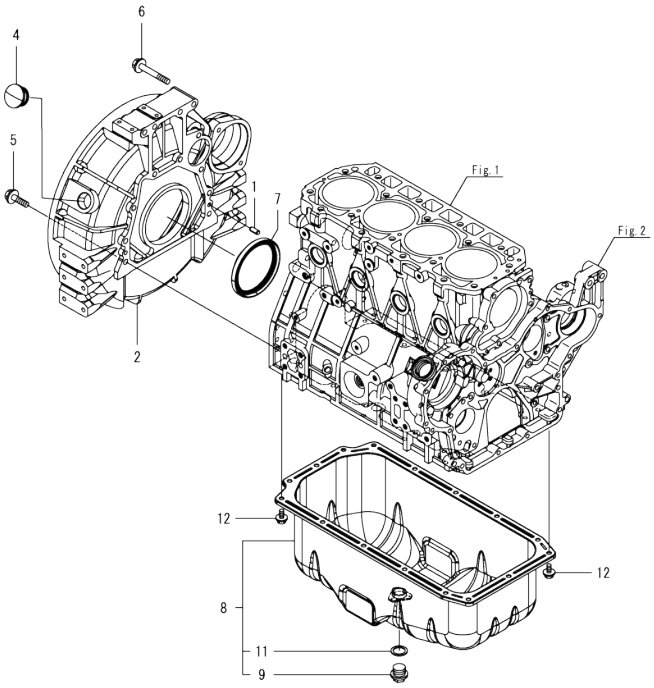

(A)=4TNV94L-BVTYW (D)=
(B)= (E)=
(C)= (F)=

No.	Lev.	Parts No.	Description	Q'ty (A)	(B)	(C)	(D)	(E)	(F)	I	R
1	1	129100-01580	PIN, PARALLEL 8X16	2							
2	1	129981-01600	HOUSING, FLYWHEEL	1							
4	1	119620-01750	CAP	1							
5	1	26206-100352	BOLT, M10X 35 PLATED	9							
6	1	26206-100702	BOLT, M10X 70 PLATED	4							
7	1	129916-01790	SEAL, D115/95XT11	1							
8	1	129916-01710	OIL PAN ASSY	1							
9	2	119640-01640	PLUG, DRAIN M22	1							
11	2	22190-220002	WASHER, SEAL 22	1							
12	1	26106-080122	BOLT, M8X 12 PLATED	16							

N:Old ←Yes/No→ New. Q:Old ←No/Yes→ New, R:Old ←Yes/Yes→ New. S:Old ←No/No→ New. W:Add. Z:Discontinued. F:Interchangeable by set. K:Q'ty Change

Copyright (C) 2016 YANMAR GLOBAL CS CO., LTD. All RightsReserved.

Fig.4. CYLINDER HEAD & BONNET

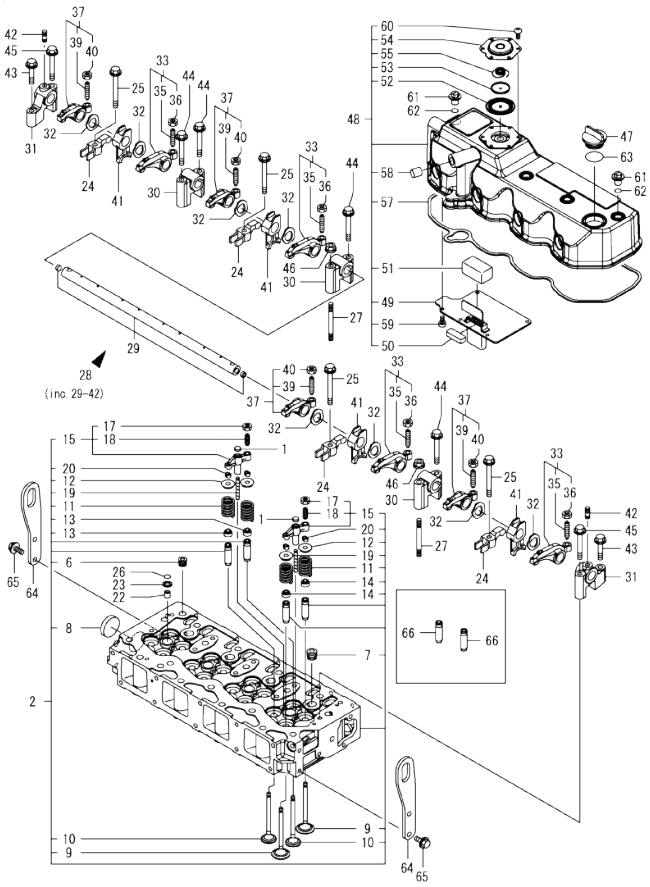

(A)=4TNV94L-BVTYW
(B)=
(C)=
(D)=
(E)=
(F)=

No.	Lev.	Parts No.	Description	Q'ty (A)	(B)	(C)	(D)	(E)	(F)	I	R
1	1	123907-11550	SEAT, VALVE BRIDGE	8							
2	1	129907-11700	HEAD ASSY, CYLINDER	1							
6	2	23876-020000	PLUG, R02	1							
7	2	23876-030000	PLUG, R03	4							
8	2	27241-400000	PLUG, 40	1							
9	2	129907-11100	VALVE, SUCTION	8							
10	2	129907-11110	VALVE, EXHAUST	8							
11	2	129907-11120	SPRING, VALVE	16							
12	2	119620-11180	RETAINER, SPRING	16							
13	2	119803-11340	SEAL, VALVE STEM	8							
14	2	124160-11340	SEAL, VALVE STEM	8							
15	2	129907-11510	BRIDGE ASSY, VALVE	8							
17	3	129150-11750	NUT, M8	8							
18	3	123907-11830	ADJUSTER	8							
19	2	123907-11820	GUIDE, BRIDGE	8							
20	2	27310-070001	COTTER, 7	16							
22	1	119802-11870	PROTECTOR, NOZZLE	4							
23	1	119625-11880	SEAT, NOZZLE	4							
24	1	129907-11910	RETAINER, NOZZLE	4							
25	1	129907-11950	BOLT, M8X75	4							
26	1	24311-000120	O-RING, 1AP12.0	4							
27	1	119593-11301	BOLT, STUD M8X80	2							
28	1	129907-11341	SHAFT ASSY, ROCKER	1							
29	2	129907-11250	SHAFT, ROCKER ARM	1							
30	2	129907-11260	SUPPORT, ROCKER ARM	3							
31	2	129907-11270	SUPPORT, ROCKER ARM	2							
32	2	123907-11280	WASHER	8							
33	2	129907-11650	ARM ASSY, ROCKER	4							
35	3	129150-11230	SCREW, VALVE ADJUST	4							
36	3	129150-11750	NUT, M8	4							
37	2	129907-11660	ARM ASSY, ROCKER	4							
39	3	129150-11230	SCREW, VALVE ADJUST	4							
40	3	129150-11750	NUT, M8	4							
41	2	129907-11920	RETAINER, NOZZLE	4							
42	2	26226-080222	STUD, M8X 22	2							
43	1	26106-080402	BOLT, M8X 40 PLATED	2							
44	1	26106-080602	BOLT, M8X 60 PLATED	4							
45	1	26106-080602	BOLT, M8X 60 PLATED	2							
46	1	26306-080002	NUT, M8	2							
47	1	124160-01751	CAP, FILLER	1							
48	1	129907-11321	BONNET ASSY, HEAD	1							
49	2	129907-03011	PLATE, BAFFLE	1							
50	2	129907-03061	BAFFLE, BREATHER	1							
51	2	129907-03070	BAFFLE, BREATHER	1							
52	2	123907-03100	DIAPHRAGM	1							
53	2	123907-03110	PLATE	1							
54	2	123907-03120	PLATE, BREATHER	1							
55	2	123907-03140	SPRING, DIAPHRAGM	1							
57	2	129933-11310	GASKET, BONNET	1							
58	2	119640-61400	PLUG	1							
59	2	22857-500100	SCREW, 5X10	6							

Remarks
(1)Spare parts.

N:Old ←Yes/No→ New. Q:Old ←No/Yes→ New. R:Old ←Yes/Yes→ New. S:Old ←No/No→ New. W:Add. Z:Discontinued. F:Interchangeable by set. K:Q'ty Change

++ CONTINUE ++

Copyright (C) 2016 YANMAR GLOBAL CS CO., LTD. All RightsReserved.

Fig.4. CYLINDER HEAD & BONNET

(A)=4TNV94L-BVTYW
(B)=
(C)=
(D)=
(E)=
(F)=

No.	Lev.	Parts No.	Description	Q'ty (A)	(B)	(C)	(D)	(E)	(F)	I	R
60	2	22857-500100	SCREW, 5X10	6							
61	1	124160-11360	KNOB	4							
62	1	24311-000120	O-RING, 1AP12.0	4							
63	1	24311-000320	O-RING, 1AP32.0	1							
64	1	129907-07900	LIFTER, ENGINE	2							
65	1	26106-080162	BOLT, M8X 16 PLATED	4							
66	1	129907-11800	GUIDE, VALVE	16							1

Remarks
(1)Spare parts.

N:Old ←Yes/No→ New. Q:Old ←No/Yes→ New. R:Old ←Yes/Yes→ New. S:Old ←No/No→ New. W:Add. Z:Discontinued. F:Interchangeable by set. K:Q'ty Change

Copyright (C) 2016 YANMAR GLOBAL CS CO., LTD. All RightsReserved.

Fig.5. SUCTION MANIFOLD & AIR CLEANER

(A)=4TNV94L-BVTYW (D)=
(B)= (E)=
(C)= (F)=

No.	Lev.	Parts No.	Description	Q'ty (A)	(B)	(C)	(D)	(E)	(F)	I	R
1	1	129907-12100	MANIFOLD, AIR INTAKE	1							
2	1	129907-12110	GASKET, MANIFOLD	1							
3	1	26106-080552	BOLT, M8X 55 PLATED	9							
4	1	26106-080852	BOLT, M8X 85 PLATED	1							
5	1	121850-77021	GASKET, AIR HEATER	1							
6	1	129915-77051	HEATER, AIR 12V	1							
7	1	26106-080352	BOLT, M8X 35 PLATED	4							

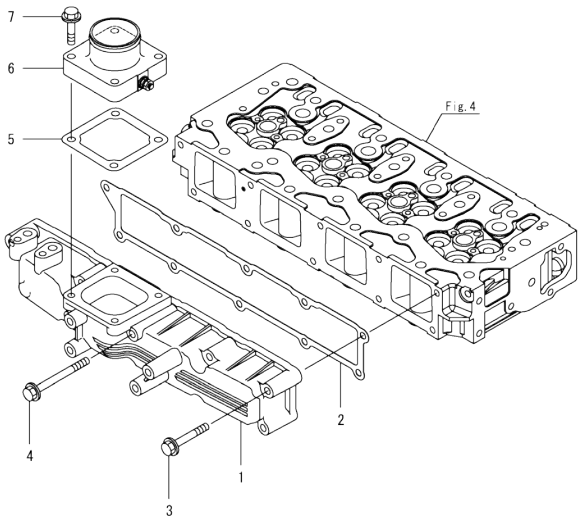

N:Old ←Yes/No→ New. Q:Old ←No/Yes→ New. R:Old ←Yes/Yes→ New. S:Old ←No/No→ New. W:Add. Z:Discontinued. F:Interchangeable by set. K:Q'ty Change

Copyright (C) 2016 YANMAR GLOBAL CS CO., LTD. All RightsReserved.

Fig.6. EXHAUST MANIFOLD

(A)=4TNV94L-BVTYW
(B)=
(C)=
(D)=
(E)=
(F)=

No.	Lev.	Parts No.	Description	Q'ty (A)	(B)	(C)	(D)	(E)	(F)	I	R
1	1	129907-13201	MANIFOLD, EXHAUST	1							
2	1	129900-13251	GASKET, EXH.MANIFOLD	1							
3	1	123900-13610	BOLT, STUD M8X80	2							
4	1	129E00-13640	BOLT, M8X80 10.9T	6							
5	1	119131-18320	BOLT, STUD M8X22	4							
6	1	26306-080002	NUT, M8	2							

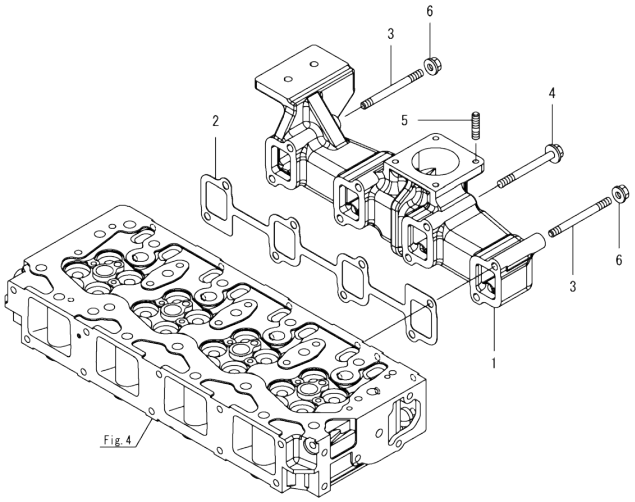

N:Old ←Yes/No→ New. Q:Old ←No/Yes→ New. R:Old ←Yes/Yes→ New. S:Old ←No/No→ New. W:Add. Z:Discontinued. F:Interchangeable by set. K:Q'ty Change

Copyright (C) 2016 YANMAR GLOBAL CS CO., LTD. All RightsReserved.

Fig.7. CAMSHAFT & DRIVING GEAR

(A)=4TNV94L-BVTYW
(B)=
(C)=
(D)=
(E)=
(F)=

No.	Lev.	Parts No.	Description	Q'ty (A)	(B)	(C)	(D)	(E)	(F)	I	R
1	1	129150-14200	TAPPET	8							
2	1	129907-14400	PUSH-ROD	8							
3	1	129908-14581	CAMSHAFT ASSY	1							
4	2	129150-02450	BEARING, THRUST	1							
6	2	129900-14100	GEAR, CAMSHAFT	1							
7	2	22512-070140	KEY, 7X 14	1							
8	1	26106-080142	BOLT, M8X 14 PLATED	2							
9	1	123900-25060	SHAFT, IDLE GEAR	1							
10	1	129900-25100	GEAR ASSY, IDLE	1							
13	1	26106-080552	BOLT, M8X 55 PLATED	3							
14	1	129953-25300	BOLT	4							
15	1	129907-25900	GEAR, PUMP	1							
16	1	129150-25920	BUSH, IDLE GEAR	1							1
17	1	158563-51150	FLANGE	1							

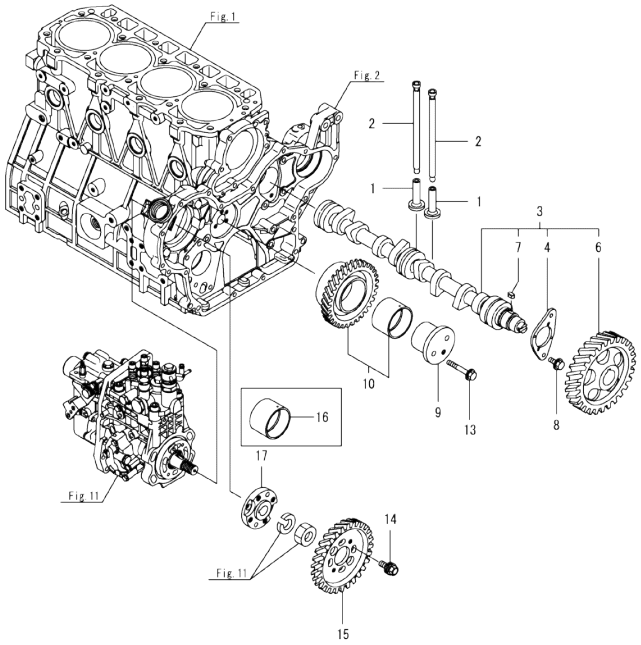

Remarks
(1)Spare parts.

N:Old ←Yes/No→ New. Q:Old ←No/Yes→ New. R:Old ←Yes/Yes→ New. S:Old ←No/No→ New. W:Add. Z:Discontinued. F:Interchangeable by set. K:Q'ty Change

Copyright (C) 2016 YANMAR GLOBAL CS CO., LTD. All RightsReserved.

Fig.8. CRANKSHAFT & PISTON

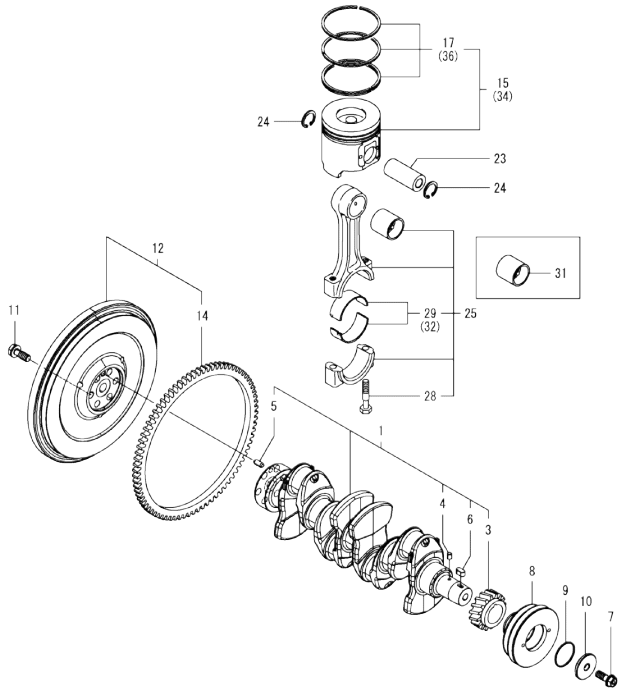

(A)=4TNV94L-BVTYW
(B)=
(C)=
(D)=
(E)=
(F)=

No.	Lev.	Parts No.	Description	Q'ty (A)	(B)	(C)	(D)	(E)	(F)	I	R
1	1	129902-21000	CRANKSHAFT ASSY	1							
3	2	129900-21200	GEAR, CRANKSHAFT	1							
4	2	121850-21290	PIN	1							
5	2	121850-21920	PIN, PARALLEL 10X22	1							
6	2	22512-070140	KEY, 7X 14	1							
7	1	129916-21610	BOLT	1							
8	1	129916-21680	V-PULLEY, CRANKSHAFT	1							
9	1	129960-21930	GASKET, WASHER	1							
10	1	129960-21940	WASHER, V-PULLEY	1							
11	1	121850-21130	BOLT, FLYWHEEL	6							
12	1	129916-21590	FLYWHEEL ASSY	1							
14	2	129900-21600	GEAR, RING	1							
15	1	129906-22090	PISTON ASSY	4							
17	2	129906-22050	RING SET, PISTON	4							
23	1	120130-22301	PIN, PISTON	4							
24	1	22252-000300	RING, 30	8							
25	1	129900-23001	ROD ASSY, CONNECTING	4							
28	2	129900-23200	BOLT, CONNECTING ROD	8							
29	2	129900-23601	BEARING, CRANK PIN	4							
31	1	129900-23911	BEARING, PISTON PIN	4							1
32	1	129900-23611	BEARING ASSY, 0.25US	4							2
34	1	129906-22910	PISTON ASSY, 0.25 OS	4							3
36	2	129916-22950	RING SET, 0.25 OS	4							3

Remarks
(1)Spare parts.
(2)Under-sized(U.S.=0.25) parts.
(3)Over-sized(O.S.=0.25) parts.

N:Old $\frac{\text{Yes}}{\text{No}}$ New. Q:Old $\frac{\text{No}}{\text{Yes}}$ New. R:Old $\frac{\text{Yes}}{\text{Yes}}$ New. S:Old $\frac{\text{No}}{\text{No}}$ New. W:Add. Z:Discontinued. F:Interchangeable by set. K:Q'ty Change

Copyright (C) 2016 YANMAR GLOBAL CS CO., LTD. All RightsReserved.

Fig.9. LUB. OIL SYSTEM

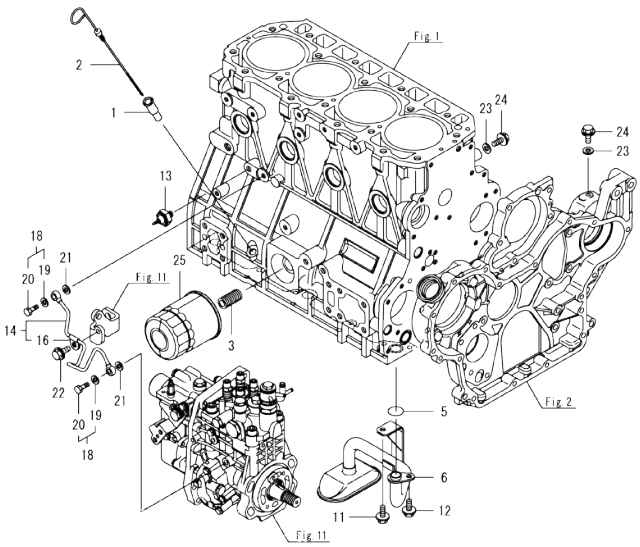

(A)=4TNV94L-BVTYW (D)=
(B)= (E)=
(C)= (F)=

No.	Lev.	Parts No.	Description	Q'ty (A)	(B)	(C)	(D)	(E)	(F)	I	R
1	1	121520-34810	GUIDE, DIPSTICK	1							
2	1	129906-34851	DIPSTICK	1							
3	1	119000-35140	BOLT, STUD FILTER	1							
5	1	129900-32030	O-RING, P20	1							
6	1	129953-35000	PIPE ASSY, OIL INLET	1							
11	1	26106-080122	BOLT, M8X 12 PLATED	1							
12	1	26106-080162	BOLT, M8X 16 PLATED	1							
13	1	114250-39450	SWITCH, HYDRAULIC	1							
14	1	129907-39061	PIPE ASSY, OIL	1							
16	2	123907-39500	RETAINER, PIPE	1							
18	1	129005-59830	BOLT ASSY, JOINT M8	2							
19	2	22190-080002	WASHER, SEAL 8	2							
20	2	23857-030000	BOLT, JOINT 3	2							
21	1	22190-080002	WASHER, SEAL 8	2							
22	1	26106-080122	BOLT, M8X 12 PLATED	1							
23	1	22190-080002	WASHER, SEAL 8	2							
24	1	26106-080122	BOLT, M8X 12 PLATED	2							
25	1	119005-35151	FILTER, D80X100	1							1

Remarks
(1)Spare parts.

N:Old $\xleftarrow[\text{No}]{\text{Yes}}$ New. Q:Old $\xleftarrow[\text{Yes}]{\text{No}}$ New, R:Old $\xleftarrow[\text{Yes}]{\text{Yes}}$ New, S:Old $\xleftarrow[\text{No}]{\text{No}}$ New. W:Add. Z:Discontinued. F:Interchangeable by set. K:Q'ty Change

Copyright (C) 2016 YANMAR GLOBAL CS CO., LTD. All RightsReserved.

Fig.10. COOLING WATER SYSTEM

(A)=4TNV94L-BVTYW
(B)=
(C)=
(D)=
(E)=
(F)=

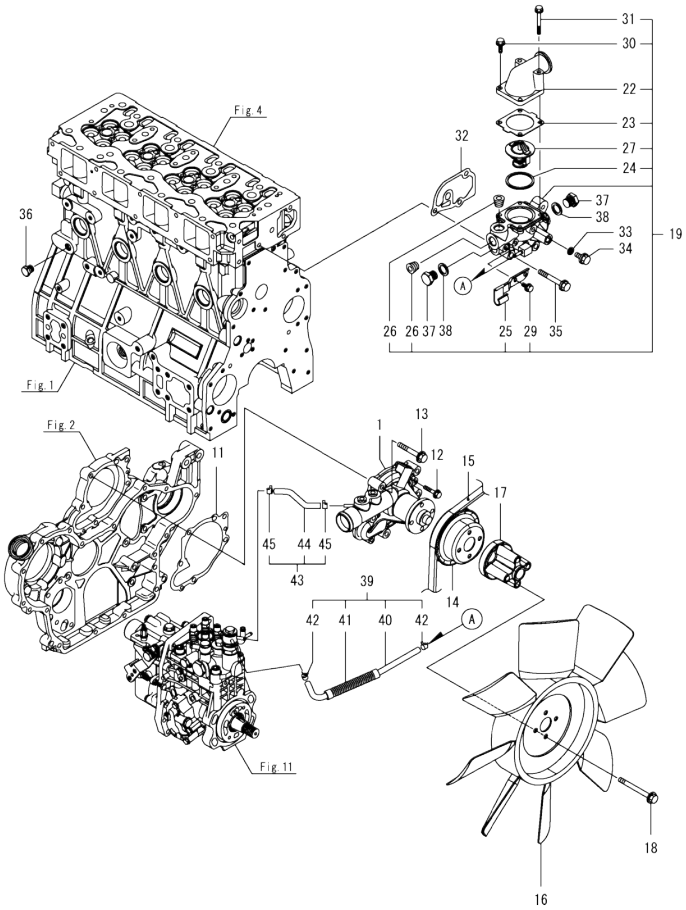

No.	Lev.	Parts No.	Description	Q'ty (A)	(B)	(C)	(D)	(E)	(F)	I	R
1	1	129907-42002	PUMP ASSY, CW LOW	1							
11	1	129900-42020	GASKET, WATER PUMP	1							
12	1	26106-060302	BOLT, M6X 30 PLATED	2							
13	1	26106-080552	BOLT, M8X 55 PLATED	5							
14	1	129930-42450	V-PULLEY, C.W.PUMP	1							
15	1	25152-004150	V-BELT, A41.5	1							
16	1	129953-44710	FAN, COOLING D=460	1							
17	1	119117-44760	SPACER, FAN	1							
18	1	26106-080802	BOLT, M8X 80 PLATED	4							
19	1	129906-49810	CASE ASSY,THERMOSTAT	1							
22	2	129980-49530	COVER, THERMOSTAT	1							
23	2	121850-49540	GASKET, THERMOSTAT	1							
24	2	121850-49550	GASKET, THERMOSTAT	1							
25	2	129907-49730	RETAINER, PIPE	1							
26	2	129916-49740	PLUG, R3/8	2							
27	2	121850-49801	THERMOSTAT, 82C	1							
29	2	26106-060122	BOLT, M6X 12 PLATED	1							
30	2	26106-060202	BOLT, M6X 20 PLATED	2							
31	2	26106-060552	BOLT, M6X 55 PLATED	2							
32	1	129900-49870	GASKET, THERMOSTAT	1							
33	1	23414-080000	GASKET, 8X1.0	1							
34	1	26106-080122	BOLT, M8X 12 PLATED	1							
35	1	26106-080602	BOLT, M8X 60 PLATED	3							
36	1	171056-49120	PLUG, DRAIN R1/4	1							
37	1	121450-42450	PLUG, M16	2							
38	1	124465-44950	GASKET, 16	2							
39	1	129907-49610	HOSE ASSY, WATER	1							
40	2	129907-49710	HOSE, WATER	1							
41	2	129907-49750	TUBE, CORRUGATED	1							
42	2	124722-59050	CLAMP, HOSE 9	2							
43	1	129907-49620	HOSE ASSY, WATER	1							
44	2	129907-49720	HOSE, WATER	1							
45	2	124722-59050	CLAMP, HOSE 9	2							

N:Old ←Yes/No→ New. Q:Old ←No/Yes→ New. R:Old ←Yes/Yes→ New. S:Old ←No/No→ New. W:Add. Z:Discontinued. F:Interchangeable by set. K:Q'ty Change

Copyright (C) 2016 YANMAR GLOBAL CS CO., LTD. All RightsReserved.

Fig.11. FUEL INJECTION PUMP

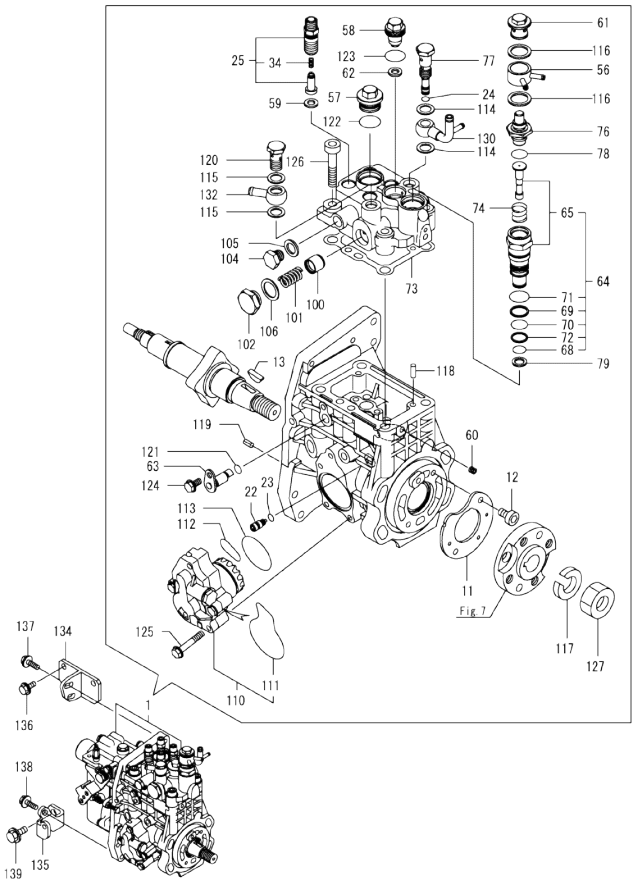

Remarks
(1)Governor(Fig.12) is incorporated in this Fuel Injection Pump(No.1).

(A)=4TNV94L-BVTYW
(B)=
(C)=
(D)=
(E)=
(F)=

No.	Lev.	Parts No.	Description	Q'ty (A)	(B)	(C)	(D)	(E)	(F)	I	R
1	1	729929-51330	FIE ASSY	1							1
11	2	129928-51900	COVER	1							
12	2	129008-51920	BOLT, SOCKET M6X10	2							
13	2	144626-51090	FEATHER KEY, 5X19	1							
22	2	158600-51270	STOPPER, TAPPET	1							
23	2	158563-51281	O-RING, 4D S6	1							
24	2	158563-51281	O-RING, 4D S6	1							
25	2	129509-51390	VALVE ASSY, DELIVERY	4							
34	3	158563-51330	SPRING, DELIVERY	4							
56	2	158553-51551	JOINT, COOLING WATER	1							
57	2	158601-51550	PLUG, M22	1							
58	2	129907-51560	PLUG, M16	1							
59	2	158552-51571	GASKET, PLUG	4							
60	2	158557-51570	PLUG, RACK	1							
61	2	158601-51570	PLUG	1							
62	2	129906-51580	GASKET, PLUG	1							
63	2	158552-51580	LIFTER, LINK	1							
64	2	119802-51590	TIMER ASSY	1							
65	3	119802-51600	TIMER ASSY	1							
68	3	158553-51670	O-RING	1							
69	3	119802-51680	RING, BACKUP	1							
70	3	119802-51690	O-RING	1							
71	3	24356-190200	O-RING, 4D19020	1							
72	3	24372-000150	RING, BACK UP T2P15	1							
73	2	158560-51600	GASKET	1							
74	2	158553-51630	SPRING, TIMER	1							
76	2	158553-51640	THERMOELEMENT	1							
77	2	158601-51650	JOINT, OVER FLOW	1							
78	2	158553-51660	O-RING, P14	1							
79	2	158553-51680	GASKET, TIMER	1							
100	2	158601-51770	PISTON, ACCUMLATOR	1							
101	2	158552-51781	SPRING, ACCUMULATOR	1							
102	2	158601-51790	PLUG	1							
104	2	158553-51930	PLUG, M12	1							
105	2	22190-120002	WASHER, SEAL 12	1							
106	2	22190-180002	WASHER, SEAL 18	1							
110	2	158552-52100	PUMP ASSY, FUEL FEED	1							
111	3	158552-52500	O-RING	1							
112	2	158552-52311	O-RING	1							
113	2	158552-52400	O-RING, 4E S42	1							
114	2	22190-120002	WASHER, SEAL 12	2							
115	2	22190-120002	WASHER, SEAL 12	2							
116	2	22190-180002	WASHER, SEAL 18	2							
117	2	22217-180000	WASHER, SPRING 18	1							
118	2	22312-050140	PIN, PARALLEL 5X14	2							
119	2	22351-050010	PIN, SPRING 5.0X10	2							
120	2	23857-060000	BOLT, JOINT 6	1							
121	2	24311-000070	O-RING, 1AP7.0	1							
122	2	24356-190200	O-RING, 4D19020	1							
123	2	24356-240210	O-RING, 4D24021	1							
124	2	26106-060102	BOLT, M6X 10 PLATED	1							

N:Old ←Yes/No→ New. Q:Old ←No/Yes→ New. R:Old ←Yes/Yes→ New. S:Old ←No/No→ New. W:Add. Z:Discontinued. F:Interchangeable by set. K:Q'ty Change

++ CONTINUE ++

Copyright (C) 2016 YANMAR GLOBAL CS CO., LTD. All RightsReserved.

Fig.11. FUEL INJECTION PUMP

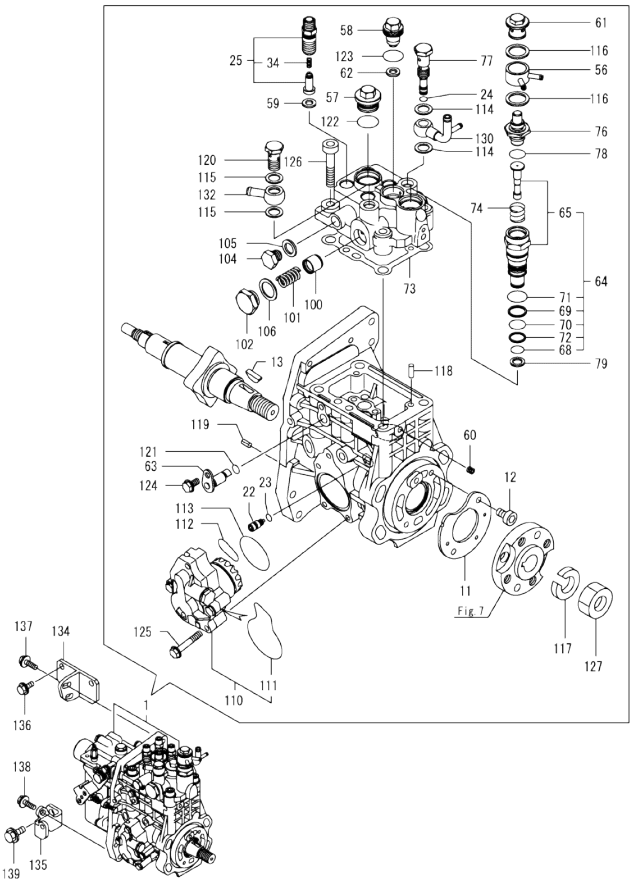

Remarks
(1)Governor(Fig.12) is incorporated in this Fuel Injection Pump(No.1).

(A)=4TNV94L-BVTYW (D)=
(B)= (E)=
(C)= (F)=

No.	Lev.	Parts No.	Description	Q'ty (A)	(B)	(C)	(D)	(E)	(F)	I	R
125	2	26106-060352	BOLT, M6X 35 PLATED	4							
126	2	26450-100452	BOLT, M10X 45	4							
127	2	26776-180002	NUT, LOCK M18	1							
130	2	158552-51670	JOINT, OVER FLOW	1							
132	2	129916-59020	JOINT, PIPE 12	1							
134	1	129907-01950	RETAINER, PUMP	1							
135	1	129907-01960	RETAINER, PUMP	1							
136	1	26106-080162	BOLT, M8X 16 PLATED	2							
137	1	26106-080222	BOLT, M8X 22 PLATED	2							
138	1	26106-080222	BOLT, M8X 22 PLATED	1							
139	1	26106-100202	BOLT, M10X 20 PLATED	1							

N:Old ←Yes/No→ New. Q:Old ←No/Yes→ New, R:Old ←Yes/Yes→ New, S:Old ←No/No→ New. W:Add. Z:Discontinued. F:Interchangeable by set. K:Q'ty Change

Copyright (C) 2016 YANMAR GLOBAL CS CO., LTD. All RightsReserved.

Fig.12. GOVERNOR

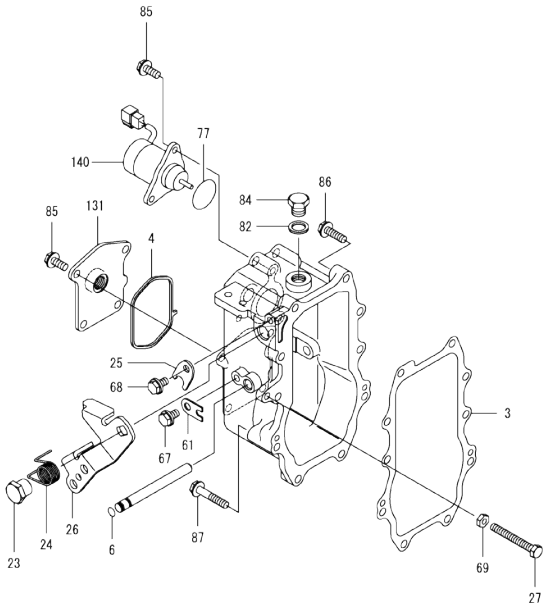

(A)=4TNV94L-BVTYW
(B)=
(C)=
(D)=
(E)=
(F)=

No.	Lev.	Parts No.	Description	Q'ty (A)	(B)	(C)	(D)	(E)	(F)	I	R
3	2	158560-61050	GASKET	1							
4	2	158560-61071	GASKET	1							
6	2	129155-51280	O-RING, S6	1							
23	2	129255-61410	NUT, M8	1							
24	2	119807-61420	SPRING, RETURN	1							
25	2	158560-61430	STOPPER, SHAFT	1							
26	2	158560-61442	LEVER, REGULATOR	1							
27	2	129155-61460	BOLT, LIMITING	1							
61	2	119660-61901	STOPPER, SHAFT	1							
67	2	26106-060102	BOLT, M6X 10 PLATED	1							
68	2	26106-060102	BOLT, M6X 10 PLATED	1							
69	2	26756-060002	NUT, LOCK M6	1							
77	2	158552-61900	O-RING	1							
82	2	22190-160002	WASHER, SEAL 16	1							
84	2	23887-160002	PLUG, 16	1							
85	2	26106-060142	BOLT, M6X 14 PLATED	6							
86	2	26106-060252	BOLT, M6X 25 PLATED	8							
87	2	26106-060402	BOLT, M6X 40 PLATED	2							
131	2	129906-61060	COVER, GOVERNOR CASE	1							
140	2	129630-77900	SOLENOID, STOP	1							

Remarks
* This figure(Governor) is incorporated in the Fuel Injection Pump(Fig.11).

N:Old ←Yes/No→ New. Q:Old ←No/Yes→ New. R:Old ←Yes/Yes→ New. S:Old ←No/No→ New. W:Add. Z:Discontinued. F:Interchangeable by set. K:Q'ty Change

Copyright (C) 2016 YANMAR GLOBAL CS CO., LTD. All RightsReserved.

Fig.13. FUEL INJECTION VALVE

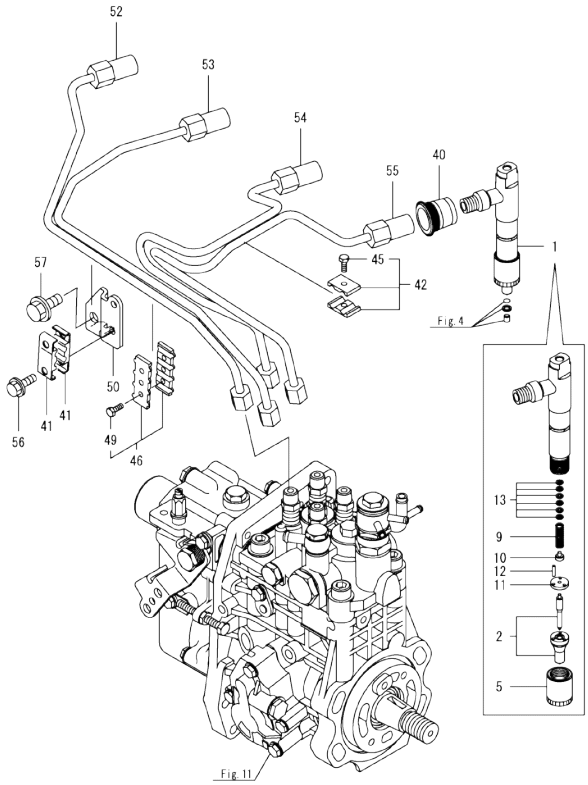

(A)=4TNV94L-BVTYW
(B)=
(C)=
(D)=
(E)=
(F)=

No.	Lev.	Parts No.	Description	Q'ty (A)	(B)	(C)	(D)	(E)	(F)	I	R
1	1	729906-53100	FUEL INJECTOR ASSY	4							
2	2	129906-53000	NOZZLE ASSY, F.I.	4							
5	2	114250-53080	NUT, NOZZLE	4							
9	2	114250-53120	SPRING, NOZZLE	4							
10	2	114250-53130	SEAT, SPRING	4							
11	2	114250-53140	SPACER	4							
12	2	114250-53210	PIN	8							
13	2	119803-53400	SHIM SET	4							1
40	1	123907-11601	SEAL, PIPE	4							
41	1	122780-59100	RETAINER	2							
42	1	119305-59120	RETAINER, PIPE	1							
45	2	129150-59131	BOLT, M4X14	1							
46	1	129550-59120	RETAINER, PIPE	1							
49	2	129150-59131	BOLT, M4X14	2							
50	1	129907-59710	SUPPORT	1							
52	1	129907-59810	PIPE ASSY, INJECTION	1							
53	1	129907-59820	PIPE ASSY, INJECTION	1							
54	1	129907-59830	PIPE ASSY, INJECTION	1							
55	1	129907-59840	PIPE ASSY, INJECTION	1							
56	1	26106-060162	BOLT, M6X 16 PLATED	2							
57	1	26106-080182	BOLT, M8X 18 PLATED	1							

Remarks
(1)Spare parts.

N:Old $\frac{\text{Yes}}{\text{No}}$ New. Q:Old $\frac{\text{No}}{\text{Yes}}$ New. R:Old $\frac{\text{Yes}}{\text{Yes}}$ New. S:Old $\frac{\text{No}}{\text{No}}$ New. W:Add. Z:Discontinued. F:Interchangeable by set. K:Q'ty Change

Copyright (C) 2016 YANMAR GLOBAL CS CO., LTD. All RightsReserved.

Fig.14. FUEL PIPE

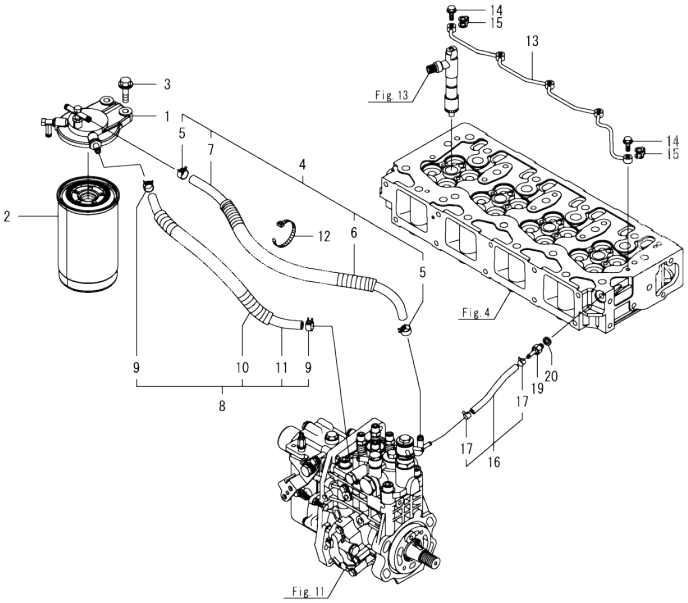

(A)=4TNV94L-BVTYW (D)=
(B)= (E)=
(C)= (F)=

No.	Lev.	Parts No.	Description	Q'ty (A)	(B)	(C)	(D)	(E)	(F)	I	R
1	1	129004-55612	BRACKET, FILTER	1							
2	1	129907-55801	FILTER, FUEL	1							
3	1	26106-080302	BOLT, M8X 30 PLATED	2							
4	1	129457-59010	HOSE ASSY, FUEL	1							
5	2	124766-59050	CLAMP, HOSE 11.5	2							
6	2	129957-59120	TUBE, CORRUGATED 15	1							
7	2	105025-59750	HOSE, FUEL	1							
8	1	129981-59010	HOSE ASSY, FUEL	1							
9	2	124766-59050	CLAMP, HOSE 11.5	2							
10	2	129950-59221	TUBE, CORRUGATED 15	1							
11	2	129980-59510	HOSE, FUEL	1							
12	1	121750-59890	BAND, NYLON	1							
13	1	129907-59140	PIPE ASSY, RETURN	1							
14	1	123907-59540	BOLT, PIPE JOINT M6	5							
15	1	123907-59550	GASKET	5							
16	1	129486-59551	HOSE ASSY, RETURN	1							
17	2	124722-59050	CLAMP, HOSE 9	2							
19	1	123907-59560	JOINT, HOSE	1							
20	1	22190-080002	WASHER, SEAL 8	1							

N:Old ←Yes/No→ New. Q:Old ←No/Yes→ New. R:Old ←Yes/Yes→ New. S:Old ←No/No→ New. W:Add. Z:Discontinued. F:Interchangeable by set. K:Q'ty Change

Copyright (C) 2016 YANMAR GLOBAL CS CO., LTD. All RightsReserved.

Fig.15. STARTER MOTOR

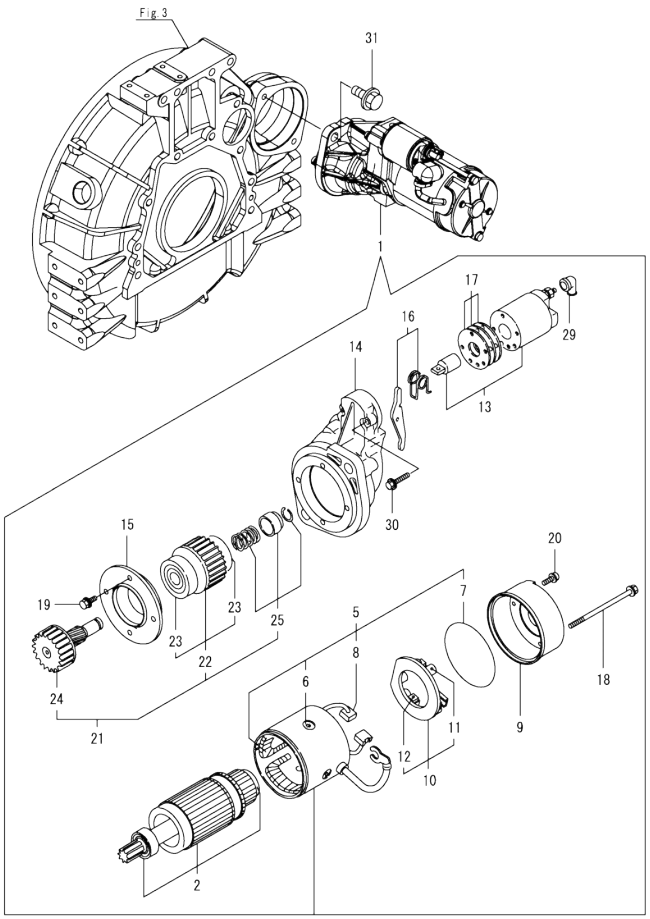

(A)=4TNV94L-BVTYW (D)=
(B)= (E)=
(C)= (F)=

No.	Lev.	Parts No.	Description	Q'ty (A)	(B)	(C)	(D)	(E)	(F)	I	R
1	1	129940-77011	STARTER ASSY	1							
2	2	129940-77100	ARMATURE ASSY	1							
5	2	129940-77130	COIL ASSY, FIELD	1							
6	3	129940-77140	SCREW, CORE SET	4							
7	3	129940-77150	O-RING	1							
8	3	129940-77160	BRUSH	2							
9	2	129940-77171	COVER	1							
10	2	129940-77181	HOLDER ASSY, BRUSH	1							
11	3	129940-77190	SPRING, BRUSH	1							
12	3	129940-77200	BRUSH	2							
13	2	129940-77210	SWITCH ASSY, MAGNET	1							
14	2	129940-77221	CASE, GEAR	1							
15	2	129940-77230	RETAINER, BEARING	1							
16	2	129940-77240	LEVER SET	1							
17	2	129940-77250	COVER KIT, DUST	1							
18	2	129940-77260	BOLT, THROUGH	2							
19	2	129940-77270	BOLT	4							
20	2	129940-77280	SCREW	2							
21	2	123900-77510	PINION ASSY	1							
22	3	123900-77520	CLUTCH ASSY	1							
23	4	X2240610100	BEARING, BALL	2							
24	3	123900-77540	SHAFT, PINION	1							
25	3	119131-77550	STOPPER SET, PINION	1							
29	2	121254-77810	COVER, TERMINAL	1							
30	2	114371-79070	BOLT	2							
31	1	26106-120252	BOLT, M12X 25 PLATED	2							

N:Old ◄Yes/No► New. Q:Old ◄No/Yes► New. R:Old ◄Yes/Yes► New. S:Old ◄No/No► New. W:Add. Z:Discontinued. F:Interchangeable by set. K:Q'ty Change

Copyright (C) 2016 YANMAR GLOBAL CS CO., LTD. All RightsReserved.

Fig.16. GENERATOR

(A)=4TNV94L-BVTYW (D)=
(B)= (E)=
(C)= (F)=

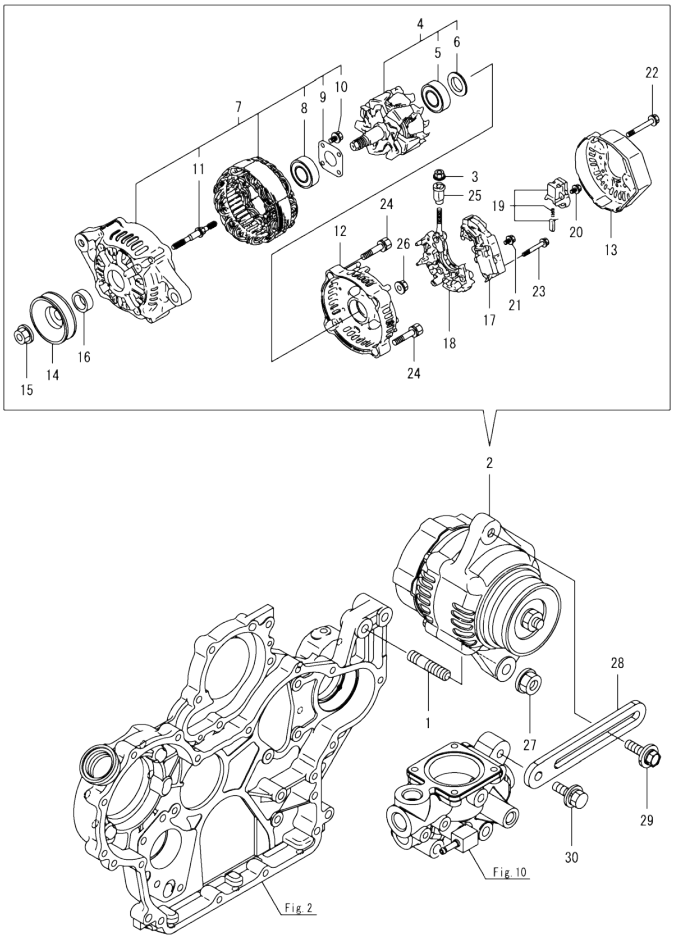

No.	Lev.	Parts No.	Description	Q'ty (A)	(B)	(C)	(D)	(E)	(F)	I	R
1	1	129795-01900	BOLT, STUD M10X33	1							
2	1	119626-77210	ALTERNATOR, 12V-55A	1							
3	2	X9490561001	NUT	1							
4	2	129052-77380	ROTOR ASSY	1							
5	3	123501-79240	BEARING, BALL	1							
6	3	119620-79250	COVER, BEARING	1							
7	2	129052-77422	FRAME ASSY	1							
8	3	119620-79200	BEARING, BALL	1							
9	3	119620-79210	RETAINER	1							
10	3	119620-79220	SCREW	4							
11	3	119620-79230	BOLT, STUD	2							
12	2	128401-77440	FRAME	1							
13	2	119626-77450	COVER	1							
14	2	119620-77461	PULLEY, GENERATOR	1							
15	2	119620-77471	NUT	1							
16	2	119620-77490	COLLAR	1							
17	2	129423-77710	REGULATOR ASSY	1							
18	2	129052-79260	HOLDER	1							
19	2	129052-79270	HOLDER, BRUSH	1							
20	2	119620-79290	SCREW	6							
21	2	119620-79300	SCREW	1							
22	2	119620-79310	BOLT	3							
23	2	119620-79320	SCREW	2							
24	2	119620-79330	BOLT	2							
25	2	119620-79340	BUSH, INSULATION	1							
26	2	119620-79350	NUT	2							
27	1	26306-100002	NUT, M10	1							
28	1	129900-77330	ADJUSTER, BELT	1							
29	1	119810-77340	BOLT, ADJUST L=30	1							
30	1	26014-080252	BOLT, M8X 25	1							

N:Old ←Yes/No→ New. Q:Old ←No/Yes→ New. R:Old ←Yes/Yes→ New. S:Old ←No/No→ New. W:Add. Z:Discontinued. F:Interchangeable by set. K:Q'ty Change

Copyright (C) 2016 YANMAR GLOBAL CS CO., LTD. All RightsReserved.

Fig.17. ACCESSORY

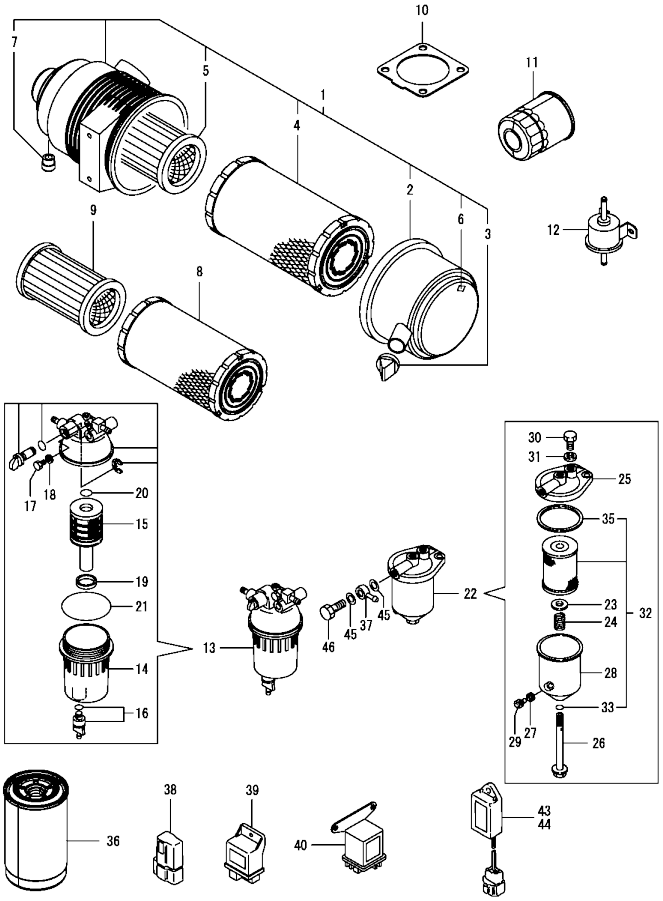

(A)=4TNV94L-BVTYW (D)=
(B)= (E)=
(C)= (F)=

No.	Lev.	Parts No.	Description	Q'ty (A)	(B)	(C)	(D)	(E)	(F)	I	R
1	1	129944-12500	AIR CLEANER ASSY	1							
2	2	129900-12530	COVER ASSY	1							
3	2	119808-12540	VALVE, UNLOAD	1							
4	2	129062-12560	ELEMENT	1							
5	2	119005-12571	ELEMENT, INNER	1							
6	2	129612-12650	LABEL, MARKING	1							
7	2	119140-12680	INDICATOR, CLEANER	1							
8	1	129906-12520	ELEMENT, AIR CLEANER	1							
9	1	119005-12571	ELEMENT, INNER	1							
10	1	129930-13201	GASKET, SILENCER	1							
11	1	119005-35151	FILTER, D80X100	1							
12	1	119225-52102	PUMP, FUEL FEED	1							
13	1	129242-55701	SEPARATOR ASSY,WATER	1							
14	2	129242-55720	CUP, SEPARATOR	1							
15	2	129242-55730	ELEMENT, FUEL	1							
16	2	129242-55740	PLUG, DRAIN	1							
17	2	129242-55750	VALVE, AIR VENT	1							
18	2	129242-55760	GASKET, PLUG	1							
19	2	129242-55770	FLOAT	1							
20	2	24311-000160	O-RING, 1AP16.0	1							
21	2	24321-000750	O-RING, 1AG75.0	1							
22	1	129065-55750	SEPARATOR ASSY,WATER	1							
23	2	123325-35160	WASHER	1							
24	2	129065-55170	SPRING, FILTER	1							
25	2	129495-55610	BODY, STRAINER	1							
26	2	129495-55620	BOLT	1							
27	2	123672-55760	GASKET	1							
28	2	129065-55760	CASE, SEPARATOR	1							
29	2	129065-55770	PLUG, DRAIN M8	1							
30	2	129065-55800	PLUG, M14	1							
31	2	123678-55890	GASKET, PLUG	1							
32	2	41650-502320	ELEMENT ASSY(D72XL90	1							
33	3	24311-000120	O-RING, 1AP12.0	1							
35	3	123325-35140	GASKET	1							
36	1	129907-55801	FILTER, FUEL	1							
37	1	121855-59880	JOINT, PIPE	2							
38	1	119643-66900	DIODE	1							
39	1	119802-77200	RELAY, SAFETY	1							
40	1	119650-77911	RELAY ASSY, GLOW	1							
43	1	128300-77920	TIMER	1							
44	1	129211-77920	TIMER	1							
45	1	22190-140002	WASHER, SEAL 14	4							
46	1	23857-080000	BOLT, JOINT 8	2							

N:Old ←Yes/No→ New. Q:Old ←No/Yes→ New. R:Old ←Yes/Yes→ New. S:Old ←No/No→ New. W:Add. Z:Discontinued. F:Interchangeable by set. K:Q'ty Change

Copyright (C) 2016 YANMAR GLOBAL CS CO., LTD. All RightsReserved.

Parts No. Index

Parts No.	Fig. No.	Ref. No.
105025-59750	14	7
114250-39450	9	13
114250-53080	13	5
114250-53120	13	9
114250-53130	13	10
114250-53140	13	11
114250-53210	13	12
114371-79070	15	30
119000-35140	9	3
119005-12571	17	5
		9
119005-35151	9	25
	17	11
119117-44760	10	17
119131-18320	6	5
119131-77550	15	25
119140-12680	17	7
119225-52102	17	12
119305-59120	13	42
119593-11301	4	27
119620-01750	3	4
119620-11180	4	12
119620-77461	16	14
119620-77471	16	15
119620-77490	16	16
119620-79200	16	8
119620-79210	16	9
119620-79220	16	10
119620-79230	16	11
119620-79250	16	6
119620-79290	16	20
119620-79300	16	21
119620-79310	16	22
119620-79320	16	23
119620-79330	16	24
119620-79340	16	25
119620-79350	16	26
119625-11880	4	23
119626-77210	16	2
119626-77450	16	13
119640-01640	3	9
119640-61400	4	58
119643-66900	17	38
119650-77911	17	40
119660-61901	12	61
119802-11870	4	22
119802-51590	11	64
119802-51600	11	65
119802-51680	11	69
119802-51690	11	70

Parts No.	Fig. No.	Ref. No.
119802-77200	17	39
119803-11340	4	13
119803-53400	13	13
119807-61420	12	24
119808-12540	17	3
119810-77340	16	29
120130-22301	8	23
121254-77810	15	29
121450-42450	10	37
121520-34810	9	1
121750-59890	14	12
121850-21130	8	11
121850-21290	8	4
121850-21920	8	5
121850-49540	10	23
121850-49550	10	24
121850-49801	10	27
121850-77021	5	5
121855-59880	17	37
122780-59100	13	41
123325-35140	17	35
123325-35160	17	23
123501-79240	16	5
123672-55760	17	27
123678-55890	17	31
123900-13610	6	3
123900-25060	7	9
123900-77510	15	21
123900-77520	15	22
123900-77540	15	24
123907-03100	4	52
123907-03110	4	53
123907-03120	4	54
123907-03140	4	55
123907-11280	4	32
123907-11550	4	1
123907-11601	13	40
123907-11820	4	19
123907-11830	4	18
123907-39500	9	16
123907-59540	14	14
123907-59550	14	15
123907-59560	14	19
124160-01751	2	34
	4	47
124160-11340	4	14
124160-11360	4	61
124240-01871	2	36
124465-44950	10	38
124722-59050	10	42

Parts No.	Fig. No.	Ref. No.
124722-59050	10	45
	14	17
124766-59050	14	5
		9
128300-77920	17	43
128401-77440	16	12
129004-55612	14	1
129005-59830	9	18
129008-51920	11	12
129052-77380	16	4
129052-77422	16	7
129052-79260	16	18
129052-79270	16	19
129062-12560	17	4
129065-55170	17	24
129065-55750	17	22
129065-55760	17	28
129065-55770	17	29
129065-55800	17	30
129100-01580	2	4
	3	1
129150-02450	7	4
129150-11230	4	35
		39
129150-11750	4	17
		36
		40
129150-14200	7	1
129150-25920	7	16
129150-59131	13	45
		49
129155-51280	12	6
129155-61460	12	27
129211-77920	17	44
129242-55701	17	13
129242-55720	17	14
129242-55730	17	15
129242-55740	17	16
129242-55750	17	17
129242-55760	17	18
129242-55770	17	19
129255-61410	12	23
129423-77710	16	17
129457-59010	14	4
129486-59551	14	16
129495-55610	17	25
129495-55620	17	26
129509-51390	11	25
129550-59120	13	46
129612-12650	17	6

Parts No.	Fig. No.	Ref. No.
129630-77900	12	140
129795-01900	16	1
129900-01200	1	27
129900-01250	1	4
129900-01850	2	39
129900-01870	2	40
129900-02020	1	6
129900-02341	1	33
129900-02410	1	9
129900-02931	1	24
129900-02941	1	36
129900-12530	17	2
129900-13251	6	2
129900-14100	7	6
129900-21200	8	3
129900-21600	8	14
129900-23001	8	25
129900-23200	8	28
129900-23601	8	29
129900-23611	8	32
129900-23911	8	31
129900-25100	7	10
129900-32001	2	8
129900-32030	2	20
	9	5
129900-32040	2	21
129900-42020	10	11
129900-49870	10	32
129900-77330	16	28
129902-21000	8	1
129906-01350	1	28
129906-12520	17	8
129906-22050	8	17
129906-22090	8	15
129906-22910	8	34
129906-34851	9	2
129906-49810	10	19
129906-51580	11	62
129906-53000	13	2
129906-61060	12	131
129907-01190	1	29
129907-01500	2	7
129907-01950	11	134
129907-01960	11	135
129907-03011	4	49
129907-03061	4	50
129907-03070	4	51
129907-07900	4	64
129907-11100	4	9
129907-11110	4	10

Parts No. Index

Parts No.	Fig. No.	Ref. No.
129907-11120	4	11
129907-11250	4	29
129907-11260	4	30
129907-11270	4	31
129907-11321	4	48
129907-11341	4	28
129907-11510	4	15
129907-11650	4	33
129907-11660	4	37
129907-11700	4	2
129907-11800	4	66
129907-11910	4	24
129907-11920	4	41
129907-11950	4	25
129907-12100	5	1
129907-12110	5	2
129907-13201	6	1
129907-14400	7	2
129907-25900	7	15
129907-39061	9	14
129907-42002	10	1
129907-49610	10	39
129907-49620	10	43
129907-49710	10	40
129907-49720	10	44
129907-49730	10	25
129907-49750	10	41
129907-51560	11	58
129907-55801	14	2
	17	36
129907-59140	14	13
129907-59710	13	50
129907-59810	13	52
129907-59820	13	53
129907-59830	13	54
129907-59840	13	55
129908-14581	7	3
129915-77051	5	6
129916-01710	3	8
129916-01790	3	7
129916-01800	2	3
129916-21590	8	12
129916-21610	8	7
129916-21680	8	8
129916-22950	8	36
129916-49740	10	26
129916-59020	11	132
129927-42140	2	22
129928-51900	11	11
129930-13201	17	10

Parts No.	Fig. No.	Ref. No.
129930-42450	10	14
129933-11310	4	57
129940-77011	15	1
129940-77100	15	2
129940-77130	15	5
129940-77140	15	6
129940-77150	15	7
129940-77160	15	8
129940-77171	15	9
129940-77181	15	10
129940-77190	15	11
129940-77200	15	12
129940-77210	15	13
129940-77221	15	14
129940-77230	15	15
129940-77240	15	16
129940-77250	15	17
129940-77260	15	18
129940-77270	15	19
129940-77280	15	20
129944-12500	17	1
129950-59221	14	10
129951-01740	2	5
129953-25300	7	14
129953-35000	9	6
129953-44710	10	16
129957-59120	14	6
129960-21930	8	9
129960-21940	8	10
129980-49530	10	22
129980-59510	14	11
129981-01600	3	2
129981-59010	14	8
129C26-01890	2	37
129E00-13640	6	4
144626-51090	11	13
158552-51571	11	59
158552-51580	11	63
158552-51670	11	130
158552-51781	11	101
158552-52100	11	110
158552-52311	11	112
158552-52400	11	113
158552-52500	11	111
158552-61900	12	77
158553-51551	11	56
158553-51630	11	74
158553-51640	11	76
158553-51660	11	78
158553-51670	11	68

Parts No.	Fig. No.	Ref. No.
158553-51680	11	79
158553-51930	11	104
158557-51570	11	60
158560-51600	11	73
158560-61050	12	3
158560-61071	12	4
158560-61430	12	25
158560-61442	12	26
158563-51150	7	17
158563-51281	11	23
		24
158563-51330	11	34
158600-51270	11	22
158601-51550	11	57
158601-51570	11	61
158601-51650	11	77
158601-51770	11	100
158601-51790	11	102
171051-01921	1	5
171056-49120	10	36
22190-080002	9	19
		21
		23
	14	20
22190-120002	11	105
		114
		115
22190-140002	17	45
22190-160002	12	82
22190-180002	11	106
		116
22190-220002	3	11
22217-180000	11	117
22252-000300	8	24
22312-050140	11	118
22351-050010	11	119
22351-060012	1	10
22512-070140	7	7
	8	6
22857-500100	4	59
		60
23414-080000	10	33
23857-030000	9	20
23857-060000	11	120
23857-080000	17	46
23876-020000	4	6
23876-030000	1	11
		12
		13
	4	7

Parts No.	Fig. No.	Ref. No.
23887-160002	12	84
24311-000070	2	23
	11	121
24311-000120	4	26
		62
	17	33
24311-000160	17	20
24311-000320	2	35
	4	63
24321-000750	17	21
24351-030750	2	24
24356-190200	11	71
		122
24356-240210	11	123
24372-000150	11	72
25152-004150	10	15
26014-080252	16	30
26106-060102	11	124
	12	67
		68
26106-060122	10	29
26106-060142	12	85
26106-060162	13	56
26106-060202	10	30
26106-060252	12	86
26106-060302	10	12
26106-060352	11	125
26106-060402	12	87
26106-060552	10	31
26106-080122	3	12
	9	11
		22
		24
	10	34
26106-080142	7	8
26106-080162	2	25
		38
		41
	4	65
	9	12
	11	136
26106-080182	13	57
26106-080202	2	26
		27
26106-080222	11	137
		138
26106-080302	14	3
26106-080352	5	7
26106-080402	2	28
	4	43

Parts No. Index

Parts No.	Fig. No.	Ref. No.
26106-080452	2	29
		30
26106-080552	5	3
	7	13
	10	13
26106-080602	4	44
		45
	10	35
26106-080702	2	31
26106-080752	2	32
26106-080802	10	18
26106-080852	5	4
26106-100202	11	139
26106-120252	15	31
26206-100352	3	5
26206-100702	3	6
26216-100302	2	19
26226-080222	4	42
26306-080002	4	46
	6	6
26306-100002	2	33
	16	27
26450-100452	11	126
26756-060002	12	69
26776-180002	11	127
27241-300000	1	14
27241-400000	4	8
27310-070001	4	20
41650-502320	17	32
729900-02801	1	30
729906-01561	1	1
729906-53100	13	1
729907-01559	2	1
729929-51330	11	1
X2240610100	15	23
X9490561001	16	3

Parts No.	Fig. No.	Ref. No.

Parts No.	Fig. No.	Ref. No.

Parts No.	Fig. No.	Ref. No.