YANMAR

PARTS CATALOG

0CV10-M91300EN

Last update Feb., 2013

PREFACE

1.This Parts Catalog carries all parts incorporated in YANMAR Model 4TNV94L-NCKM, 4TNV94L-NCKS engine manufactured since October, 2003.

2.Each illustration corresponds to the parts list on the following page.

3.When ordering parts,clearly write down the engine model and serial number,as well as the name and number of each part in your order sheet. This will help insure reliable delivery of the parts you have ordered.

Directions for the Parts Catalog.

1.The parts stipulated in this Parts Catalog are not necessarily standard equipped parts.
2.Parts may change without prior notice.
3.The following is an example of the Parts Catalog format.

0CF10-G21601 29. FUEL INJECTION PUMP(W/BOOST)

(A)=4JH-DT
(B)=4JH-DTZ
(C)=4JH-DTZP
(D)=4JH-DTZA
(E)=4JH-DTZY
(F)=

① REF.	② LEV.	PARTS NO.	DESCRIPTION	Q'TY (A)	(B)	(C)	(D)	(E)	(F)	③ I	⑤ R
1	1	729595-51390	FUEL INJECTION PUMP	1	1	1	1	1			1
1-1	1	729595-51391	FUEL INJECTION PUMP	1	1	1	1	1		N	1
	(A=E00185)	(B=E00200)									
3	2	26022-060162	SCREW M 6X 16	9	9	9	9	9			
3-1 ④	2	26022-060162	SCREW M 6X 16	4	4	4	4	4		K	
	(A=E00156)	(B=E00156)	(C=E00156) (D=E00156)	(E=E00156)							
4	2	129470-51040	CAMSHAFT	1	1	1	1	1			
5	2	122710-51050	BEARING, ROLLER	2	2	2	2	2			
6	2	129470-51060	RETAINER	1	1	1	1	1			

Remarks
(1) BOOST COMPEMSATOR TYPE. OPTIONAL PART, TO E00155,(4JH-DT, 4JH-DTZ

① Ref. No.

The Ref. No. listed may not be in accordance with the illustration Ref. No.

(Ex.) Illustration No. 1 — List Ref No. 1 (Before change) → 1- 1 (After change)

For interchangeable symbols N, R and K, illustrations for new parts may be abbreviated.

② Lev. (Level)

Level indication
The numbers below indicate the level of relativity towards the main part.
1 ----- Main parts (Assembly parts)
2 ----- Sub component included in " 1 ".
3 ----- Sub component included in " 2 ".
Note) Parts that are not for sale are partially illustrated but not listed.

③ Interchangeability Mark

When a part change takes place, one of the following interchangeability symbols is indicated beside the part.

Symbol	Interchangeability	Contents note
N	Old ← Yes / No → New	New Part is interchangeable for Old Part but Old Part is not interchangeable for New Part.
Q	Old ← No / Yes → New	New Part is not interchangeable for Old Part but Old Part is interchangeable for New Part.
R	Old ← Yes / Yes → New	New/ Old Parts are both interchangeable.
S	Old ← No / No → New	New/ Old Parts are both not interchangeable.
W		Part newly added.
Z		Part discontinued.
F		Not interchangeable by a single part but interchangeable together with related parts.
K		Changes only for used parts quantities.

④ Effective Machine No.

When a part changes, the effective Machine No. will be indicated in the (A)-(F) column.

Product Symbol	Product No.	Product Symbol	Product No.
C	Clutch No. Compressor No.	F	Machine No. (Agricultural Equip.)
D	Drive No.	M	Machine No.
E	Engine No.		

Note 1) A date may follow the symbol. (Ex.) 1996.01
Note 2) " XXXXX " and " ZZZZZ " are for parts that could not be predicted or for engine models that could not be identified.
Note 3) (A=E00185) is the E (Engine Serial Number) for the column (A) model (in this case 4JH-DT) after the parts design change.

⑤ Remarks Mark

Figures or alphabets (symbols) are entered in the remarks column.
The comments (remarks) on parts that are indicated at the bottom of the illustration are the same symbols as those stated above.

Contents

0CV10-M91300

Fig. No.	Fig. Name
4TNV94L-NCKM,NCKS	
1.	CYLINDER BLOCK
2.	GEAR HOUSING
3.	FLYWHEEL HOUSING & OIL SUMP
4.	CYLINDER HEAD & BONNET
5.	SUCTION MANIFOLD
6.	EXHAUST MANIFOLD
7.	CAMSHAFT & DRIVING GEAR
8.	CRANKSHAFT & PISTON
9.	LUB. OIL SYSTEM
10.	COOLING WATER SYSTEM
11.	FUEL INJECTION PUMP
12.	FUEL INJECTION VALVE
13.	FUEL LINE
14.	GENERATOR
18.	(14A)GENERATOR
15.	GASKET SET
16.	FUEL INJECTION PUMP(INNER PARTS)
17.	GOVERNOR (INNER PARTS)

Fig.1. CYLINDER BLOCK

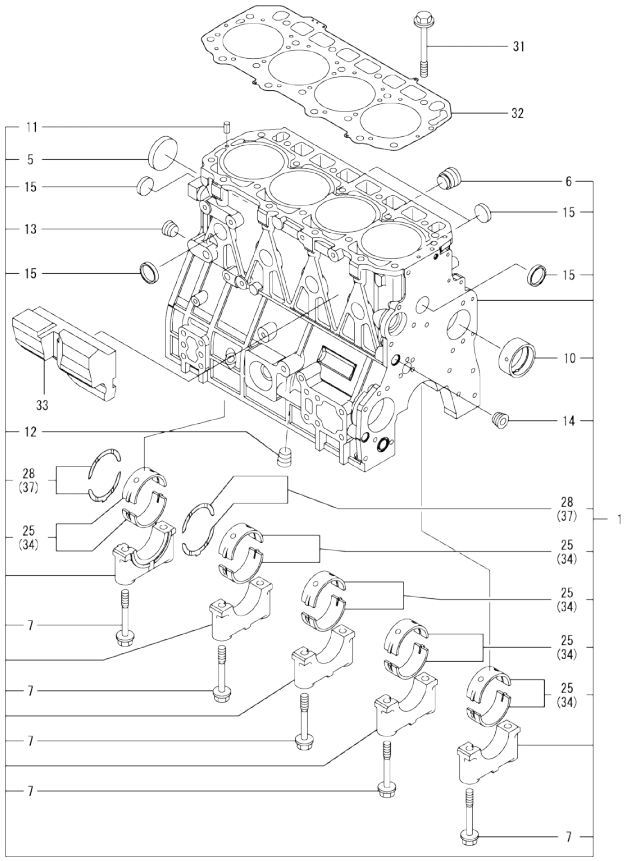

Remarks
(1) UNDER-SIZED(U.S=0.25)PART.
(2) OVER-SIZED(O.S=0.25)PART.
(3) REPAIR PART.

(A)=4TNV94L-NCKM (D)=
(B)=4TNV94L-NCKS (E)=
(C)= (F)=

No.	Lev.	Parts No.	Description	Q'ty (A)	(B)	(C)	(D)	(E)	(F)	I	R
1	1	729906-01560	BLOCK ASSY, CYLINDER	1	1						
5	2	129900-01250	PLUG, 55	1	1						
6	2	171051-01921	PLUG, NPTF1	1	1						
7	2	129900-02020	BOLT, METAL CAP	10	10						
10	2	129900-02410	BUSH, CAMSHAFT	1	1						
11	2	22351-060012	PIN, SPRING 6.0X12	2	2						
12	2	23876-030000	PLUG, R03	1	1						
13	2	23876-030000	PLUG, R03	1	1						
14	2	23876-030000	PLUG, R03	1	1						
15	2	27241-300000	PLUG 30	8	8						
25	2	729900-02800	BEARING, MAIN	5	5						3
28	2	129900-02930	BEARING, THRUST	2	2						
31	1	129900-01200	BOLT, HEAD	18	18						
32	1	129906-01340	GASKET, HEAD	1	1						
32-1	1	129907-01331	GASKET, HEAD	1	1					N	
32-2	(A=*2009.09) 1 (A=*2009.12)	129906-01350 (B=*2009.12)	GASKET, HEAD	1	1					N	
33	1	129907-01190	SPACER	1	1						
34	1	129900-02340	BEARING, 0.25 US	5	5						1
37	1	129900-02940	BEARING, THRUST 0.25	2	2						2

N:Old ←Yes/No→ New. Q:Old ←No/Yes→ New. R:Old ←Yes/Yes→ New. S:Old ←No/No→ New. W:Add. Z:Discontinued. F:Interchangeable by set. K:Q'ty Change

Copyright (C) YANMAR GLOBAL CS CO., LTD. All RightsReserved.

Fig.2. GEAR HOUSING

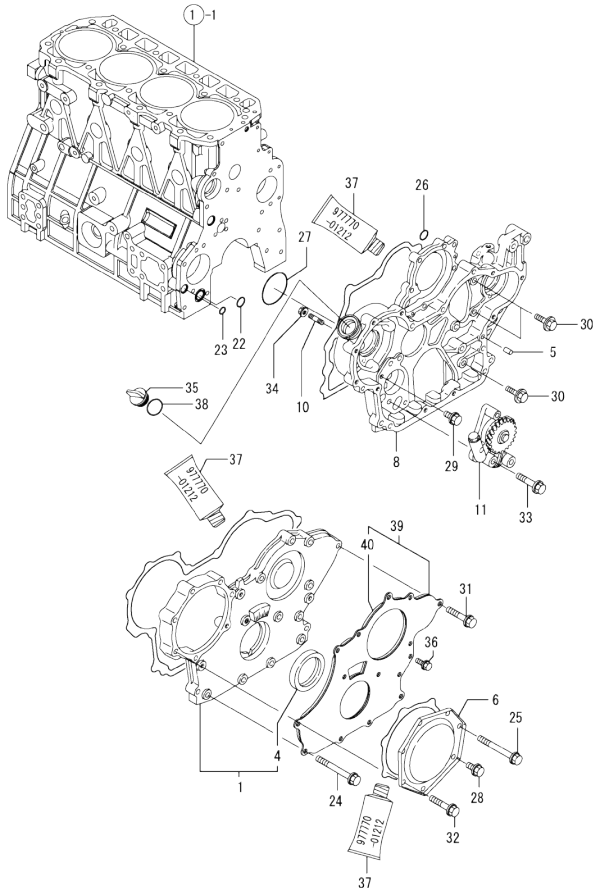

(A)=4TNV94L-NCKM
(B)=4TNV94L-NCKS
(C)=
(D)=
(E)=
(F)=

No.	Lev.	Parts No.	Description	Q'ty (A)	(B)	(C)	(D)	(E)	(F)	I	R
1	1	729907-01550	COVER ASSY,GEAR CASE	1	1						
4	2	129900-01780	SEAL, OIL	1	1						
5	1	129100-01580	PIN, M8X16	4	4						
6	1	129900-01740	COVER	1	1						
8	1	129906-01500	CASE ASSY, GEAR	1	1						
10	1	26216-100302	STUD, M10X 30	4	4						
11	1	129900-32001	PUMP ASSY, OIL	1	1						
22	1	129900-32030	O-RING, P20	1	1						
23	1	129900-32040	O-RING, P14	1	1						
24	1	129001-91810	BOLT, M8X70	6	6						
25	1	129001-91810	BOLT, M8X70	1	1						
26	1	24311-000070	O-RING, 1AP7.0	1	1						
27	1	24351-030750	O-RING, 1A3075	1	1						
28	1	26106-080162	BOLT, M8X 16 PLATED	1	1						
29	1	26106-080162	BOLT, M8X 16 PLATED	1	1						
30	1	26106-080202	BOLT, M8X 20 PLATED	3	3						
31	1	26106-080402	BOLT, M8X 40 PLATED	5	5						
32	1	26106-080402	BOLT, M8X 40 PLATED	5	5						
33	1	26106-080452	BOLT, M8X 45 PLATED	3	3						
34	1	26306-100002	NUT, M10	4	4						
35	1	124160-01751	COVER, FILLER	1	1						
36	1	26106-080162	BOLT, M8X 16 PLATED	3	3						
37	1	977770-01212	GASKET, LIQUID	1	1						1
38	1	24311-000320	O-RING, 1AP32.0	1	1						
39	1	129900-01850	COVER ASSY,GEAR CASE	1	1						
40	2	129900-01870	SPONGE	1	1						

Remarks
(1) OPTIONAL PART.

N:Old ←Yes/No→ New. Q:Old ←No/Yes→ New. R:Old ←Yes/Yes→ New. S:Old ←No/No→ New. W:Add. Z:Discontinued. F:Interchangeable by set. K:Q'ty Change

Copyright (C) YANMAR GLOBAL CS CO., LTD. All RightsReserved.

Fig.3. FLYWHEEL HOUSING & OIL SUMP

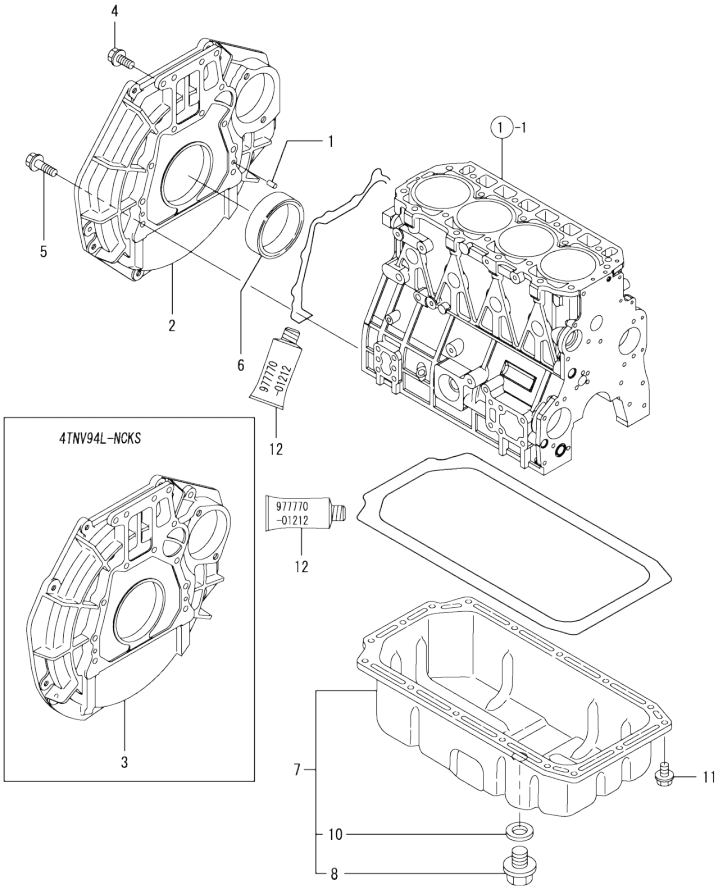

Remarks
(1) OPTIONAL PART.

(A)=4TNV94L-NCKM
(B)=4TNV94L-NCKS
(C)=
(D)=
(E)=
(F)=

No.	Lev.	Parts No.	Description	Q'ty (A)	(B)	(C)	(D)	(E)	(F)	I	R
1	1	129100-01580	PIN, M8X16	2	2						
2	1	129916-01600	HOUSING, FLYWHEEL	1							
3	1	129916-01630	HOUSING, FLYWHEEL		1						
4	1	26206-100202	BOLT, M10X 20 PLATED	4	4						
5	1	26206-100352	BOLT, M10X 35 PLATED	9	9						
6	1	124411-01780	SEAL, HTC95X115X12	1	1						
7	1	129930-01710	SUMP ASSY, OIL	1	1						
8	2	119640-01640	PLUG, DRAIN M22	1	1						
10	2	22190-220002	WASHER, SEAL 22	1	1						
11	1	26106-080122	BOLT, M8X 12 PLATED	16	16						
12	1	977770-01212	GASKET, LIQUID	1	1						1

N:Old ◄Yes/No► New. Q:Old ◄No/Yes► New. R:Old ◄Yes/Yes► New. S:Old ◄No/No► New. W:Add. Z:Discontinued. F:Interchangeable by set. K:Q'ty Change

Copyright (C) YANMAR GLOBAL CS CO., LTD. All RightsReserved.

Fig.4. CYLINDER HEAD & BONNET

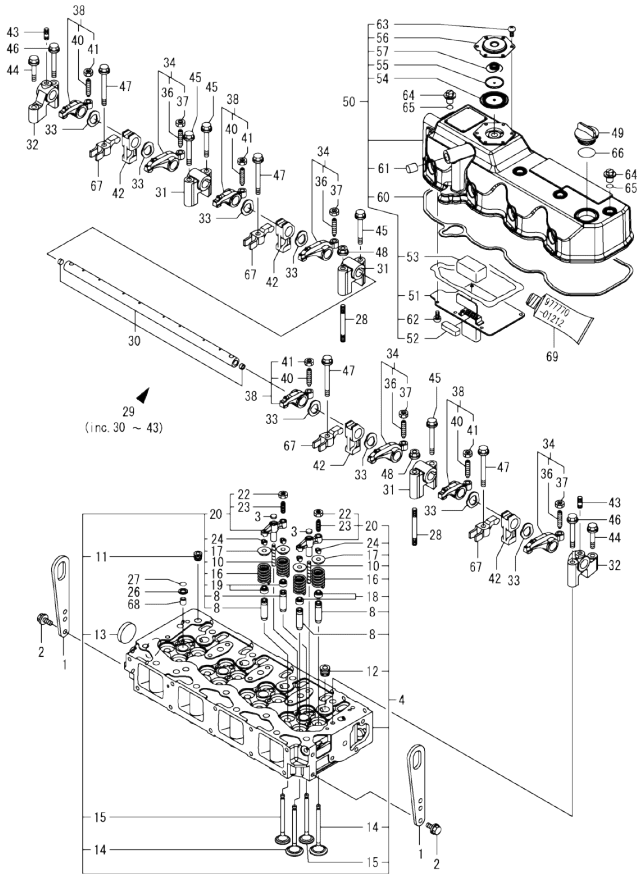

(A)=4TNV94L-NCKM
(B)=4TNV94L-NCKS
(C)=
(D)=
(E)=
(F)=

No.	Lev.	Parts No.	Description	Q'ty (A)	(B)	(C)	(D)	(E)	(F)	I	R
1	1	129900-07900	LIFTER	2	2						
2	1	26106-080162	BOLT, M8X 16 PLATED	4	4						
3	1	123907-11550	SEAT, VALVE BRIDGE	8	8						
4	1	129907-11700	HEAD ASSY, CYLINDER	1	1						
8	2	129907-11800	GUIDE, VALVE	16	16						1
10	2	123907-11820	GUIDE	8	8						
11	2	23876-020000	PLUG, R02	1	1						
12	2	23876-030000	PLUG, R03	4	4						
13	2	27241-400000	PLUG, 40	1	1						
14	2	129907-11100	VALVE, INTAKE	8	8						
15	2	129907-11110	VALVE, EXHAUST	8	8						
16	2	129907-11120	SPRING, VALVE	16	16						
17	2	119620-11180	RETAINER, SPRING	16	16						
18	2	124160-11340	SEAL, VALVE STEM	8	8						
19	2	124950-11340	SEAL, VALVE STEM	8	8						
20	2	129907-11510	BRIDGE ASSY, VALVE	8	8						
22	3	129150-11750	NUT, M8	8	8						
23	3	123907-11830	ADJUSTER	8	8						
24	2	27310-070001	COTTER, 7	16	16						
26	1	119625-11880	SEAT, NOZZLE	4	4						
27	1	24311-000120	O-RING, 1AP12.0	4	4						
28	1	119593-11301	STUD, M8X80	2	2						
29	1	129907-11341	SHAFT ASSY, ROCKER	1	1						
30	2	129907-11250	SHAFT, ROCKER ARM	1	1						
31	2	129907-11260	SUPPORT, ROCKER ARM	3	3						
32	2	129907-11270	SUPPORT, ROCKER ARM	2	2						
33	2	123907-11280	WASHER	8	8						
34	2	129907-11650	ARM, ROCKER	4	4						
36	3	129150-11230	SCREW, VALVE ADJUST	4	4						
37	3	129150-11750	NUT, M8	4	4						
38	2	129907-11660	ARM, ROCKER	4	4						
40	3	129150-11230	SCREW, VALVE ADJUST	4	4						
41	3	129150-11750	NUT, M8	4	4						
42	2	129907-11920	RETAINER	4	4						
43	2	26226-080222	STUD, M8X 22	2	2						
44	1	26106-080402	BOLT, M8X 40 PLATED	2	2						
45	1	26106-080602	BOLT, M8X 60 PLATED	4	4						
46	1	26106-080602	BOLT, M8X 60 PLATED	2	2						
47	1	129907-11950	BOLT, M8X75	4	4						
48	1	26306-080002	NUT, M8	2	2						
49	1	124160-01751	COVER, FILLER	1	1						
50	1	129907-11320	BONNET ASSY, HEAD	1	1						
51	2	129907-03010	PLATE	1	1						
52	2	129907-03060	BAFFLE, BREATHER	1	1						
53	2	129907-03070	BAFFLE, BREATHER	1	1						
54	2	123907-03100	DIAPHRAGM	1	1						
55	2	123907-03110	PLATE	1	1						
56	2	123907-03120	PLATE, BREATHER	1	1						
57	2	123907-03140	SPRING, DIAPHRAGM	1	1						
60	2	129907-11310	GASKET, BONNET	1	1						
61	2	119640-61400	PLUG	1	1						

Remarks
(1) REPAIR PART.
(2) OPTIONAL PART.

N:Old ←Yes/No→ New. Q:Old ←No/Yes→ New. R:Old ←Yes/Yes→ New. S:Old ←No/No→ New. W:Add. Z:Discontinued. F:Interchangeable by set. K:Q'ty Change

++ CONTINUE ++

Copyright (C) YANMAR GLOBAL CS CO., LTD. All RightsReserved.

Fig.4. CYLINDER HEAD & BONNET

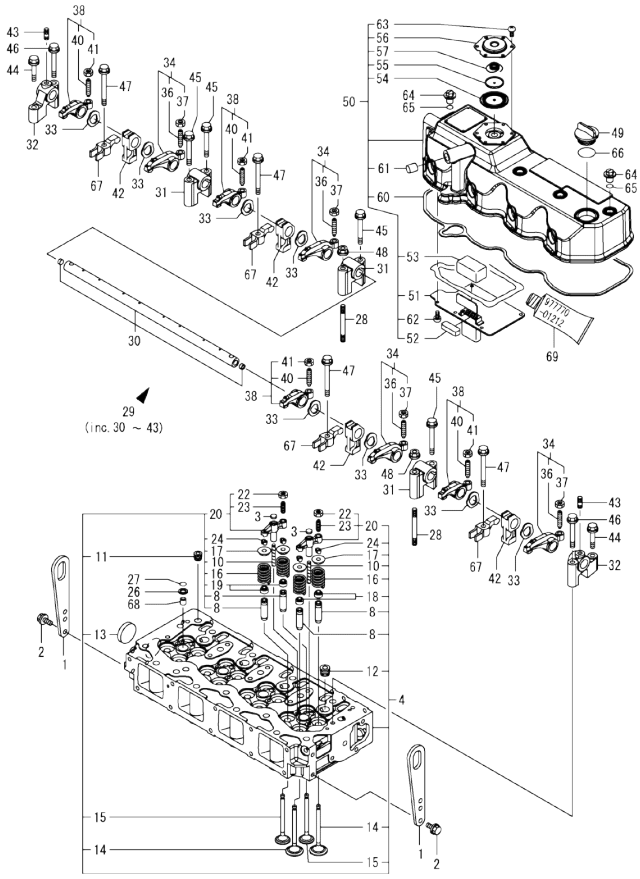

Remarks
(1) REPAIR PART.
(2) OPTIONAL PART.

(A)=4TNV94L-NCKM
(B)=4TNV94L-NCKS
(C)=
(D)=
(E)=
(F)=

No.	Lev.	Parts No.	Description	Q'ty (A)	(B)	(C)	(D)	(E)	(F)	I	R
62	2	22857-500100	SCREW, 5X10	6	6						
63	2	22857-500100	SCREW, 5X10	6	6						
64	1	124160-11360	KNOB	4	4						
65	1	24311-000120	O-RING, 1AP12.0	4	4						
66	1	24311-000320	O-RING, 1AP32.0	1	1						
67	1	129907-11910	RETAINER, NOZZLE	4	4						
68	1	119802-11870	PROTECTOR, NOZZLE	4	4						
69	1	977770-01212	GASKET, LIQUID	1	1						2

N:Old ←Yes/No→ New. Q:Old ←No/Yes→ New, R:Old ←Yes/Yes→ New, S:Old ←No/No→ New, W:Add, Z:Discontinued, F:Interchangeable by set, K:Q'ty Change

Copyright (C) YANMAR GLOBAL CS CO., LTD. All RightsReserved.

Fig.5. SUCTION MANIFOLD

(A)=4TNV94L-NCKM
(B)=4TNV94L-NCKS
(C)=
(D)=
(E)=
(F)=

No.	Lev.	Parts No.	Description	Q'ty (A)	(B)	(C)	(D)	(E)	(F)	I	R
1	1	129907-12100	MANIFOLD, AIR INTAKE	1	1						
2	1	129907-12110	GASKET, MANIFOLD	1	1						
3	1	26106-080552	BOLT, M8X 55 PLATED	9	9						
4	1	26106-080852	BOLT, M8X 85 PLATED	1	1						
5	1	119129-77020	GASKET	1	1						
6	1	121850-77021	GASKET	1	1						
7	1	119005-77050	HEATER	1	1						
8	1	119129-77520	BEND	1	1						
8-1	1	129927-77520	BEND, INTAKE	1						N	
	(A=E36882)										
9	1	26106-080402	BOLT, M8X 40 PLATED	2	2						
10	1	26106-080902	BOLT, M8X 90 PLATED	2	2						

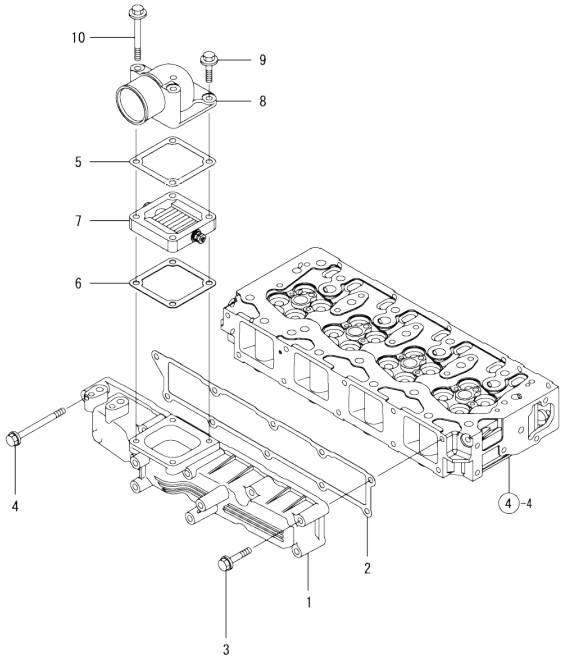

発行No. 000Y00V9130-2
更新年月: 2007 06
REVISED June. 2007

N:Old ←Yes/No→ New. Q:Old ←No/Yes→ New. R:Old ←Yes/Yes→ New. S:Old ←No/No→ New. W:Add. Z:Discontinued. F:Interchangeable by set. K:Q'ty Change

Copyright (C) YANMAR GLOBAL CS CO., LTD. All RightsReserved.

Fig.6. EXHAUST MANIFOLD

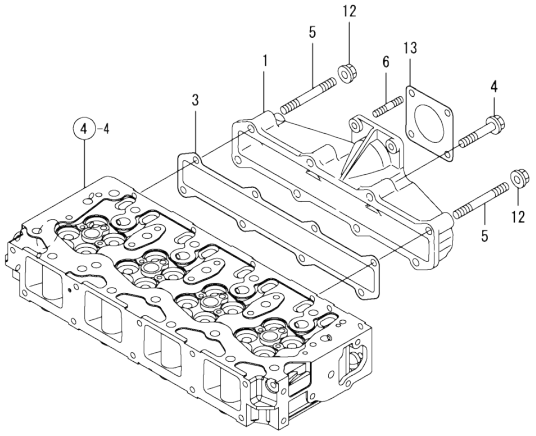

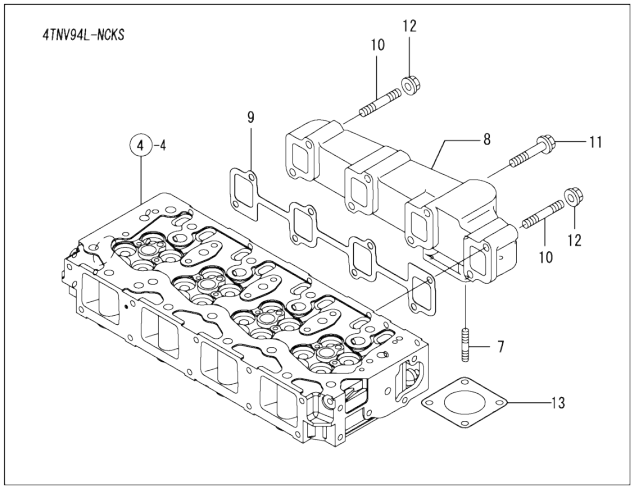

(A)=4TNV94L-NCKM (D)=
(B)=4TNV94L-NCKS (E)=
(C)= (F)=

No.	Lev.	Parts No.	Description	Q'ty (A)	(B)	(C)	(D)	(E)	(F)	I	R
1	1	129900-13120	MANIFOLD, EXHAUST	1							
3	1	129900-13150	GASKET	1							
4	1	119802-13610	BOLT, M8X45	6							
5	1	119802-13720	STUD, M8X45	2							
6	1	119131-18320	STUD, M8X22	4							
7	1	119107-13190	STUD, M10X30		4						
8	1	129916-13210	MANIFOLD, EXHAUST		1						
9	1	129900-13251	GASKET		1						
10	1	123900-13610	STUD, M8X80		2						
11	1	123900-13630	BOLT, M8X80		6						
12	1	26306-080002	NUT, M8	2	2						
13	1	128300-13230	GASKET, SILENCER	1	1						

N:Old ◄Yes/No► New. Q:Old ◄No/Yes► New. R:Old ◄Yes/Yes► New. S:Old ◄No/No► New. W:Add. Z:Discontinued. F:Interchangeable by set. K:Q'ty Change

Copyright (C) YANMAR GLOBAL CS CO., LTD. All RightsReserved.

Fig.7. CAMSHAFT & DRIVING GEAR

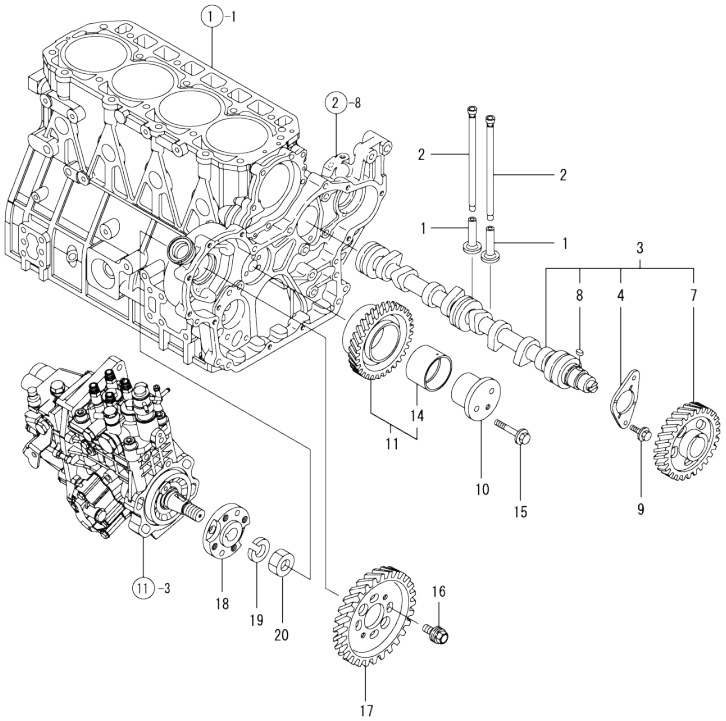

(A)=4TNV94L-NCKM
(B)=4TNV94L-NCKS
(C)=
(D)=
(E)=
(F)=

No.	Lev.	Parts No.	Description	Q'ty (A)	(B)	(C)	(D)	(E)	(F)	I	R
1	1	129150-14200	TAPPET	8	8						
2	1	129907-14400	ROD, PUSH	8	8						
3	1	129907-14581	CAMSHAFT ASSY	1	1						
3-1	1	129908-14581	CAMSHAFT ASSY	1	1					N	
	(A=EZZZZZ)	(B=EZZZZZ)									
4	2	129150-02450	BEARING, THRUST	1	1						
7	2	129900-14100	GEAR, CAMSHAFT	1	1						
8	2	22512-070140	KEY, 7X 14	1	1						
9	1	26106-080162	BOLT, M8X 16 PLATED	2	2						
10	1	123900-25060	SHAFT, IDLE GEAR	1	1						
11	1	129900-25100	GEAR ASSY, IDLE	1	1						
14	2	129150-25920	BUSH, IDLE GEAR	1	1						1
15	1	26106-080552	BOLT, M8X 55 PLATED	3	3						
16	1	129953-25300	BOLT	4	4						
17	1	123907-25909	GEAR, PUMP	1	1						
18	1	158563-51150	FLANGE	1	1						
19	1	22217-180000	WASHER, SPRING 18	1	1						
20	1	26776-180002	NUT, LOCK M18	1	1						

Remarks
(1) REPAIR PART.

N:Old $\frac{\text{Yes}}{\text{No}}$ New. Q:Old $\frac{\text{No}}{\text{Yes}}$ New. R:Old $\frac{\text{Yes}}{\text{Yes}}$ New. S:Old $\frac{\text{No}}{\text{No}}$ New. W:Add. Z:Discontinued. F:Interchangeable by set. K:Q'ty Change

Copyright (C) YANMAR GLOBAL CS CO., LTD. All RightsReserved.

Fig.8. CRANKSHAFT & PISTON

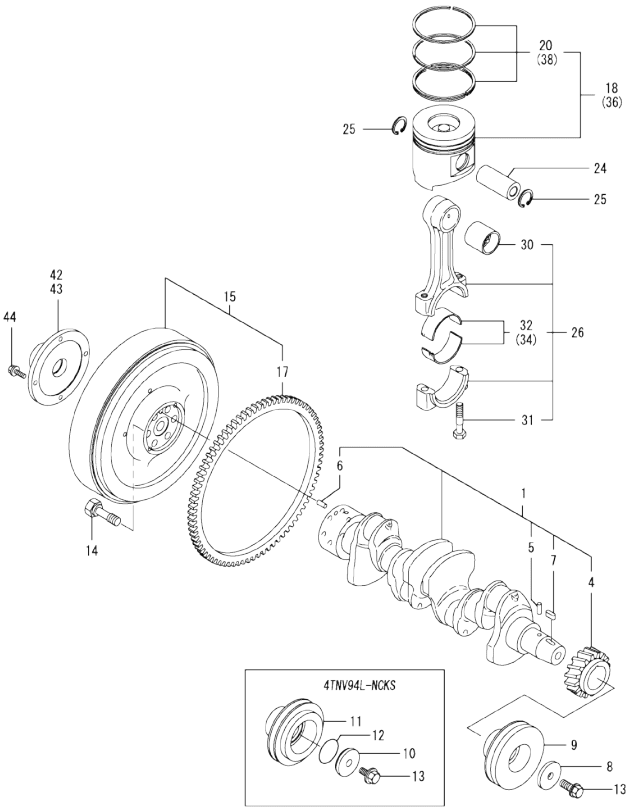

(A)=4TNV94L-NCKM (D)=
(B)=4TNV94L-NCKS (E)=
(C)= (F)=

No.	Lev.	Parts No.	Description	Q'ty (A)	(B)	(C)	(D)	(E)	(F)	I	R
1	1	129902-21000	CRANKSHAFT ASSY	1	1						
4	2	129900-21200	GEAR, CRANKSHAFT	1	1						
5	2	121850-21290	PIN	1	1						
6	2	121850-21920	PIN, M10X22	1	1						
7	2	22512-070140	KEY, 7X 14	1	1						
8	1	129900-21640	WASHER	1							
9	1	129907-21660	V-PULLEY, 130	1							
10	1	129960-21640	WASHER		1						
11	1	129916-21670	PULLEY, DAMPER		1						
12	1	24341-000530	O-RING, 1AS53.0		1						
13	1	121850-21680	BOLT	1	1						
14	1	121850-21130	BOLT, FLYWHEEL	6	6						
15	1	129916-21570	FLYWHEEL ASSY	1	1						
17	2	129900-21600	GEAR, RING	1	1						
18	1	129906-22080	PISTON ASSY	4	4						
18-1	1	129906-22090	PISTON ASSY	4	4					F	4
	(A=*2009.12)		(B=*2009.12)								
20	2	129906-22050	RING SET, PISTON	4	4						
24	1	120130-22301	PIN, PISTON	4	4						
25	1	22252-000300	RING, 30	8	8						
26	1	129900-23000	ROD ASSY, CONNECTING	4	4						
30	2	129900-23910	BEARING, PISTON PIN	4	4						1
31	2	129900-23200	BOLT, CONNECTING ROD	8	8						
32	2	129900-23600	BEARING, CRANK PIN	4	4						
34	1	129900-23610	BEARING, 0.25 US	4	4						2
36	1	729906-22900	PISTON ASSY, 0.25 OS	4	4						3
36-1	1	129906-22900	PISTON ASSY, 0.25 OS	4	4					R	3
	(A=EXXXXX)		(B=EXXXXX)								
36-2	1	129906-22910	PISTON ASSY, 0.25 OS	4	4					F	3
	(A=*2009.12)		(B=*2009.12)								
38	2	729906-22950	RING SET, 0.25 OS	4	4						3
38-1	2	129916-22950	RING SET, 0.25 OS	4	4					R	3
	(A=EXXXXX)		(B=EXXXXX)								
42	1	129916-21450	CASE, BEARING	1							
43	1	129916-21460	FLANGE		1						
44	1	26106-080222	BOLT, M8X 22 PLATED	4	4						

Remarks
(1) Repair part.
(2) Under-sized (U.S.=0.25) part.
(3) Over-sized (O.S.=0.25) part.
(4) Ref. No.18 is interchangeable with a set of Ref. No.18-1 and Fig.1 Ref. No.32-2.

N:Old ←Yes/No→ New. Q:Old ←No/Yes→ New. R:Old ←Yes/Yes→ New. S:Old ←No/No→ New. W:Add. Z:Discontinued. F:Interchangeable by set. K:Q'ty Change

Copyright (C) YANMAR GLOBAL CS CO., LTD. All RightsReserved.

Fig.9. LUB. OIL SYSTEM

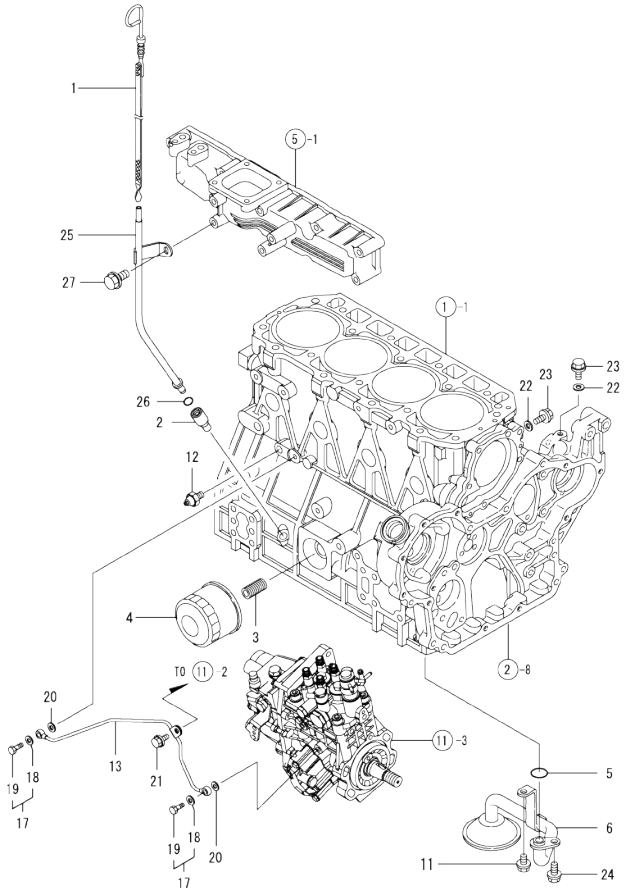

(A)=4TNV94L-NCKM
(B)=4TNV94L-NCKS
(C)=
(D)=
(E)=
(F)=

No.	Lev.	Parts No.	Description	Q'ty (A)	(B)	(C)	(D)	(E)	(F)	I	R
1	1	129906-34810	DIPSTICK, OIL	1	1						
2	1	119260-34810	GUIDE, DIPSTICK	1	1						
3	1	119000-35140	BOLT, FILTER	1	1						
4	1	119005-35151	FILTER, D80X100L	1	1						1
5	1	129900-32030	O-RING, P20	1	1						
6	1	129930-35000	PIPE ASSY, OIL INLET	1	1						
11	1	26106-080122	BOLT, M8X 12 PLATED	1	1						
12	1	121252-39450	SWITCH, 0.5KG	1	1						
13	1	129907-39060	PIPE ASSY, OIL	1	1						
17	1	129005-59830	BOLT ASSY, JOINT M8	2	2						
18	2	22190-080002	WASHER, SEAL 6	2	2						
19	2	23857-030000	BOLT, JOINT 3	2	2						
20	1	22190-080002	WASHER, SEAL 6	2	2						
21	1	26106-080122	BOLT, M8X 12 PLATED	1	1						
22	1	22190-080002	WASHER, SEAL 6	2	2						
23	1	26106-080122	BOLT, M8X 12 PLATED	2	2						
24	1	26106-080122	BOLT, M8X 12 PLATED	1	1						
25	1	129940-34840	GUIDE, DIPSTICK	1	1						
26	1	24311-240100	O-RING, 1AP10A	1	1						
27	1	26106-080162	BOLT, M8X 16 PLATED	1	1						

Remarks
(1) REPAIR PART.

N:Old ←Yes/No→ New. Q:Old ←No/Yes→ New. R:Old ←Yes/Yes→ New. S:Old ←No/No→ New. W:Add. Z:Discontinued. F:Interchangeable by set. K:Q'ty Change

Copyright (C) YANMAR GLOBAL CS CO., LTD. All RightsReserved.

Fig.10. COOLING WATER SYSTEM

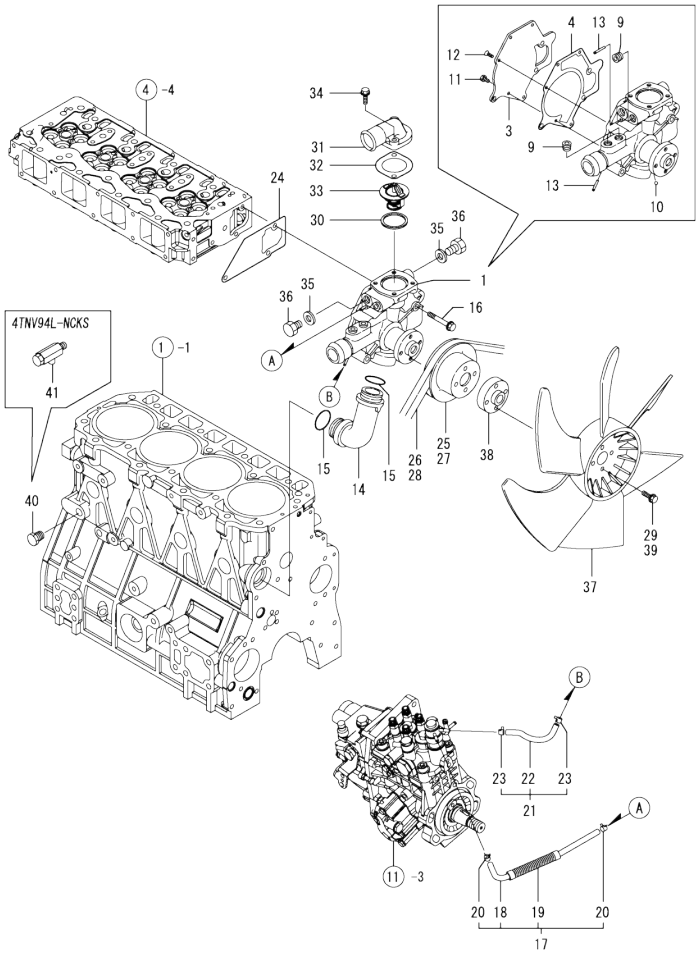

(A)=4TNV94L-NCKM
(B)=4TNV94L-NCKS
(C)=
(D)=
(E)=
(F)=

No.	Lev.	Parts No.	Description	Q'ty (A)	(B)	(C)	(D)	(E)	(F)	I	R
1	1	129907-42050	PUMP ASSY, WATER	1	1						
3	2	129900-42161	COVER	1	1						
4	2	129900-42170	GASKET	1	1						
9	2	23876-030000	PLUG, R03	3	3						
10	2	24190-080001	BALL, STEEL 1/4	1	1						
11	2	26116-060162	BOLT, M6X 16 PLATED	2	2						
12	2	26577-060142	SCREW M 6X 14	3	3						
13	2	119802-49113	JOINT, PIPE	2	2						
14	1	129900-42070	PIPE, WATER	1	1						
15	1	129900-42140	O-RING, P36	2	2						
16	1	26106-080552	BOLT, M8X 55 PLATED	3	3						
17	1	129907-49610	HOSE ASSY, WATER	1	1						
18	2	129907-49710	PIPE ASSY, WATER	1	1						
19	2	129907-49750	TUBE, CORRUGATED	1	1						
20	2	124722-59050	CLIP, HOSE 9	2	2						
21	1	129962-49620	HOSE ASSY, WATER	1	1						
22	2	129962-49720	PIPE ASSY, WATER	1	1						
23	2	124722-59050	CLIP, HOSE 9	2	2						
24	1	129900-42061	GASKET, WATER PUMP	1	1						
25	1	129900-42461	V-PULLEY	1							
26	1	25132-004600	V-BELT, A46	1							
27	1	129930-42400	V-PULLEY		1						
28	1	25132-004700	V-BELT, A47		1						
29	1	26106-080102	BOLT, M8X 10 PLATED		4						
30	1	121850-49550	GASKET, THERMOSTAT	1	1						
31	1	129900-49551	COVER, THERMOSTAT	1	1						
32	1	129900-49560	GASKET	1	1						
33	1	121850-49800	THERMOSTAT, 82	1	1						
34	1	26106-080252	BOLT, M8X 25 PLATED	2	2						
35	1	124465-44950	GASKET, 16	2	2						
36	1	121450-42450	PLUG, M16	2	2						
37	1	129916-44740	FAN, COOLING D=430	1							
38-1	1	129935-44710	SPACER, FAN	1							
39-1	1	26106-080402	BOLT, M8X 40 PLATED	4							
40	1	171056-49120	PLUG, DRAIN	1							
41	1	119620-49290	COCK ASSY, 1/4		1						

N:Old ←Yes/No→ New. Q:Old ←No/Yes→ New. R:Old ←Yes/Yes→ New. S:Old ←No/No→ New. W:Add. Z:Discontinued. F:Interchangeable by set. K:Q'ty Change

Copyright (C) YANMAR GLOBAL CS CO., LTD. All RightsReserved.

Fig.11. FUEL INJECTION PUMP

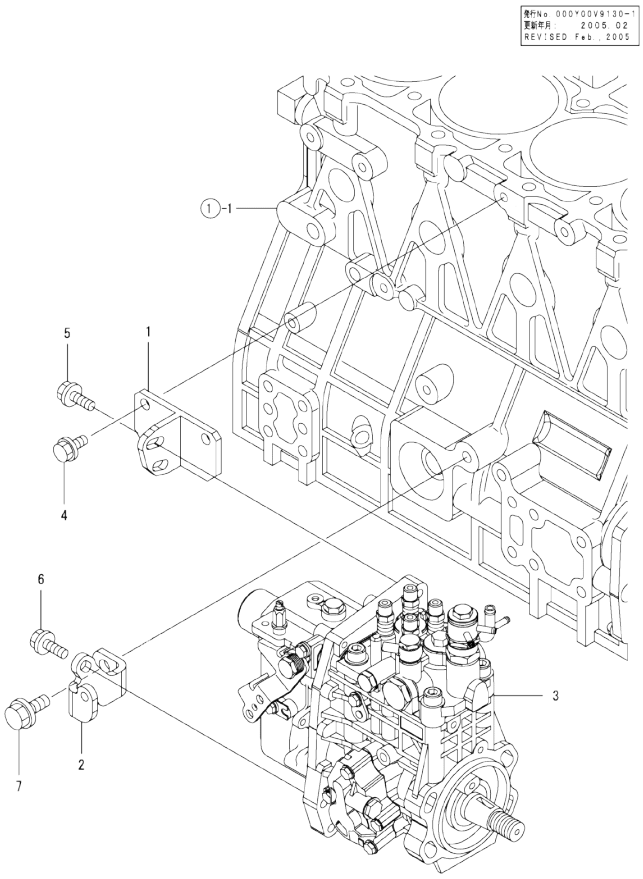

(A)=4TNV94L-NCKM
(B)=4TNV94L-NCKS
(C)=
(D)=
(E)=
(F)=

No.	Lev.	Parts No.	Description	Q'ty (A)	(B)	(C)	(D)	(E)	(F)	I	R
1	1	129907-01950	RETAINER	1	1						
2	1	129907-01960	RETAINER	1	1						
3	1	729906-51340	PUMP ASSY, INJECTION	1	1						1
4	1	26106-080162	BOLT, M8X 16 PLATED	2	2						
5	1	26106-080222	BOLT, M8X 22 PLATED	2	2						
6	1	26106-080222	BOLT, M8X 22 PLATED	1	1						
7	1	26106-100202	BOLT, M10X 20 PLATED	1	1						

Remarks
(1) REFER TO FI.16 & 17 FOR INNER PARTS.

N:Old ←Yes/No→ New. Q:Old ←No/Yes→ New. R:Old ←Yes/Yes→ New. S:Old ←No/No→ New. W:Add. Z:Discontinued. F:Interchangeable by set. K:Q'ty Change

Copyright (C) YANMAR GLOBAL CS CO., LTD. All RightsReserved.

Fig.12. FUEL INJECTION VALVE

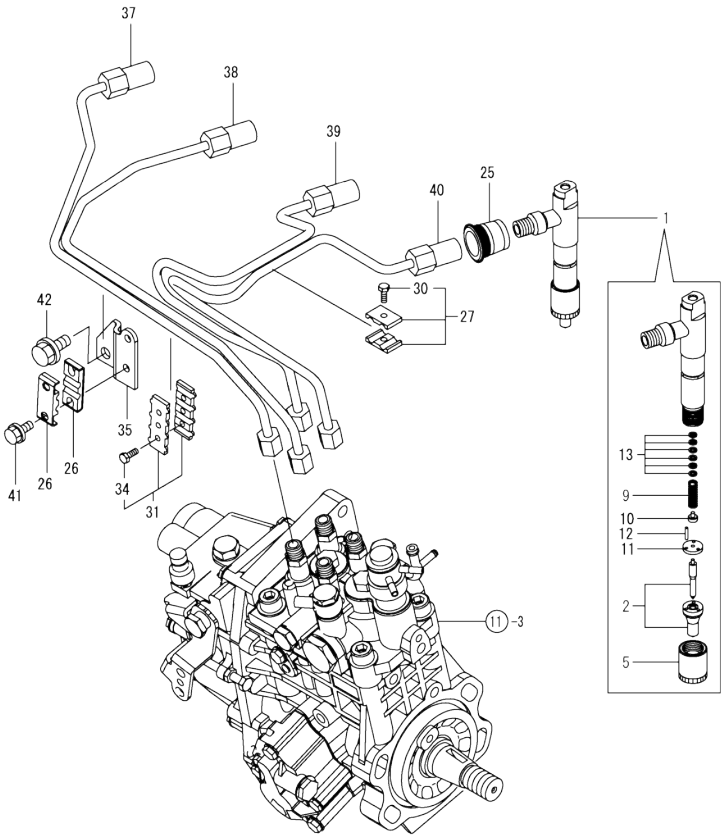

(A)=4TNV94L-NCKM
(B)=4TNV94L-NCKS
(C)=
(D)=
(E)=
(F)=

No.	Lev.	Parts No.	Description	Q'ty (A)	(B)	(C)	(D)	(E)	(F)	I	R
1	1	729906-53100	VALVE ASSY,INJECTION	4	4						
2	2	129906-53000	VALVE ASSY,INJECTION	4	4						
5	2	114250-53080	NUT, NOZZLE D16.95	4	4						
9	2	114250-53120	SPRING, NOZZLE	4	4						
10	2	114250-53130	SEAT, SPRING	4	4						
11	2	114250-53140	PLATE	4	4						
12	2	114250-53210	PIN	8	8						
13	2	114250-53400	SHIM SET	4	4						
25	1	123907-11601	SEAL	4	4						
26	1	122780-59100	RETAINER	2	2						
27	1	119305-59120	RETAINER, PIPE	1	1						
30	2	129150-59131	BOLT, M4X14	1	1						
31	1	129550-59120	RETAINER, PIPE	1	1						
34	2	129150-59131	BOLT, M4X14	2	2						
35	1	129907-59710	SUPPORT	1	1						
37	1	129907-59810	PIPE ASSY, INJECTION	1	1						
38	1	129906-59820	PIPE ASSY, INJECTION	1	1						
39	1	129906-59830	PIPE ASSY, INJECTION	1	1						
40	1	129906-59840	PIPE ASSY, INJECTION	1	1						
41	1	26106-060162	BOLT, M6X 16 PLATED	2	2						
42	1	26106-080182	BOLT, M8X 18 PLATED	1	1						

N:Old ←Yes/No→ New. Q:Old ←No/Yes→ New. R:Old ←Yes/Yes→ New. S:Old ←No/No→ New. W:Add. Z:Discontinued. F:Interchangeable by set. K:Q'ty Change

Copyright (C) YANMAR GLOBAL CS CO., LTD. All RightsReserved.

Fig.13. FUEL LINE

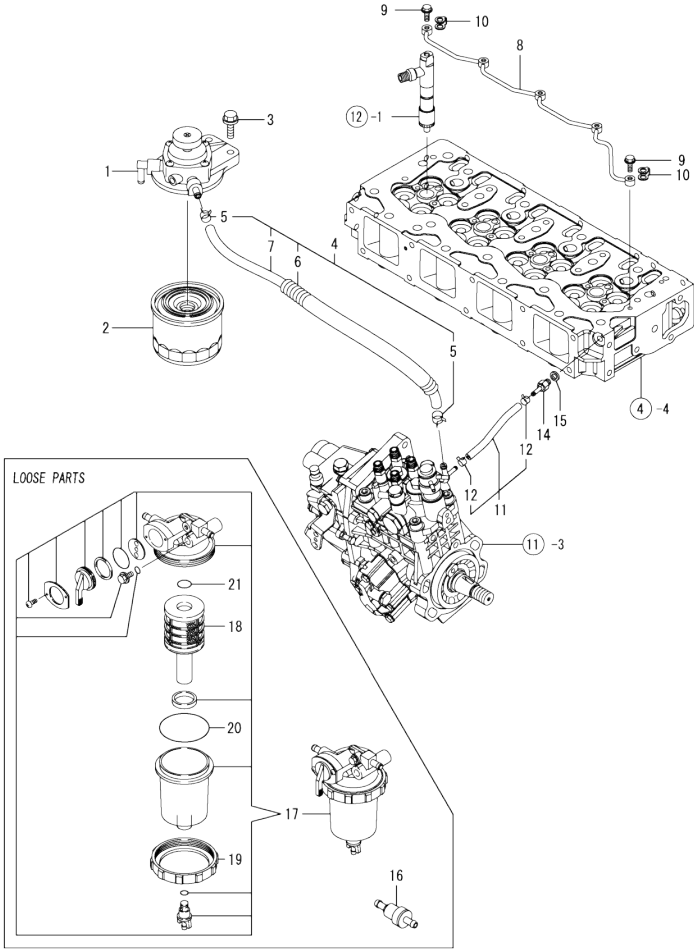

(A)=4TNV94L-NCKM
(B)=4TNV94L-NCKS
(C)=
(D)=
(E)=
(F)=

No.	Lev.	Parts No.	Description	Q'ty (A)	(B)	(C)	(D)	(E)	(F)	I	R
1	1	119802-55610	BRACKET, FILTER	1	1						
2	1	119802-55800	FILTER, FUEL	1	1						
3	1	26106-080302	BOLT, M8X 30 PLATED	2	2						
4	1	129457-59010	PIPE ASSY, FUEL	1	1						
5	2	124766-59050	CLIP, HOSE 12	2	2						
6	2	129957-59120	TUBE, CORRUGATED	1	1						
7	2	105025-59750	PIPE, FUEL	1	1						
8	1	129907-59140	PIPE ASSY, RETURN	1	1						
9	1	123907-59540	BOLT, PIPE JOINT M6	5	5						
10	1	123907-59550	GASKET	5	5						
11	1	129486-59551	PIPE ASSY, RETURN	1	1						
12	2	124722-59050	CLIP, HOSE 9	2	2						
14	1	123907-59560	JOINT	1	1						
15	1	22190-080002	WASHER, SEAL 6	1	1						
16	1	119802-59950	VALVE, CHECK	1	1						
17	1	119802-55700	SEPARATOR ASSY	1	1						
18	2	119802-55710	ELEMENT	1	1						
19	2	129100-55690	RING, RETAINING	1	1						
20	2	24321-000650	O-RING, 1AG65.0	1	1						
21	2	24311-000160	O-RING, 1AP16.0	1	1						

N:Old ←Yes/No→ New. Q:Old ←No/Yes→ New. R:Old ←Yes/Yes→ New. S:Old ←No/No→ New. W:Add. Z:Discontinued. F:Interchangeable by set. K:Q'ty Change

Copyright (C) YANMAR GLOBAL CS CO., LTD. All RightsReserved.

Fig.14. GENERATOR

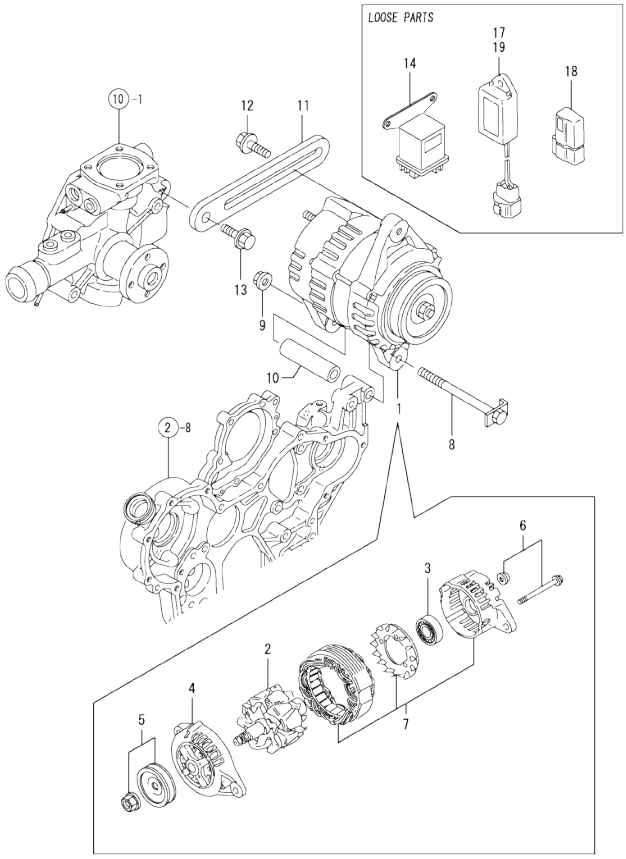

Remarks
*This item is applicable to
[(A)=EZZZZZ-1] or previous machines.
Refer to Fig.18.

(A)=4TNV94L-NCKM (D)=
(B)=4TNV94L-NCKS (E)=
(C)= (F)=

No.	Lev.	Parts No.	Description	Q'ty (A)	(B)	(C)	(D)	(E)	(F)	I	R
1	1	119836-77201	GENERATOR (AC)	1	1						
2	2	129612-77700	ROTOR ASSY	1	1						
3	2	129612-77710	BEARING, BALL	1	1						
4	2	129612-77730	BRACKET ASSY, FILTER	1	1						
5	2	129612-77740	PULLEY	1	1						
6	2	129612-77750	SCREW KIT	1	1						
7	2	119836-77920	BRACKET ASSY	1	1						
8	1	129136-77251	BOLT, M8X110	1	1						
9	1	129612-77260	NUT, ALTERNATOR	1	1						
10	1	129150-77340	SPACER	1	1						
11	1	129900-77330	ADJUSTER	1	1						
12	1	119810-77340	BOLT, ADJUSTER	1	1						
13	1	26014-080252	BOLT, M8X 25	1	1						
14	1	119650-77910	RELAY ASSY, GLOW	1	1						
17	1	129211-77920	TIMER	1	1						
18	1	119643-66900	DIODE	1	1						
19	1	128300-77920	TIMER	1	1						

N:Old $\frac{\text{Yes}}{\text{No}}$ New. Q:Old $\frac{\text{No}}{\text{Yes}}$ New. R:Old $\frac{\text{Yes}}{\text{Yes}}$ New. S:Old $\frac{\text{No}}{\text{No}}$ New. W:Add. Z:Discontinued. F:Interchangeable by set. K:Q`ty Change

Copyright (C) YANMAR GLOBAL CS CO., LTD. All RightsReserved.

Fig.18. (14A)GENERATOR

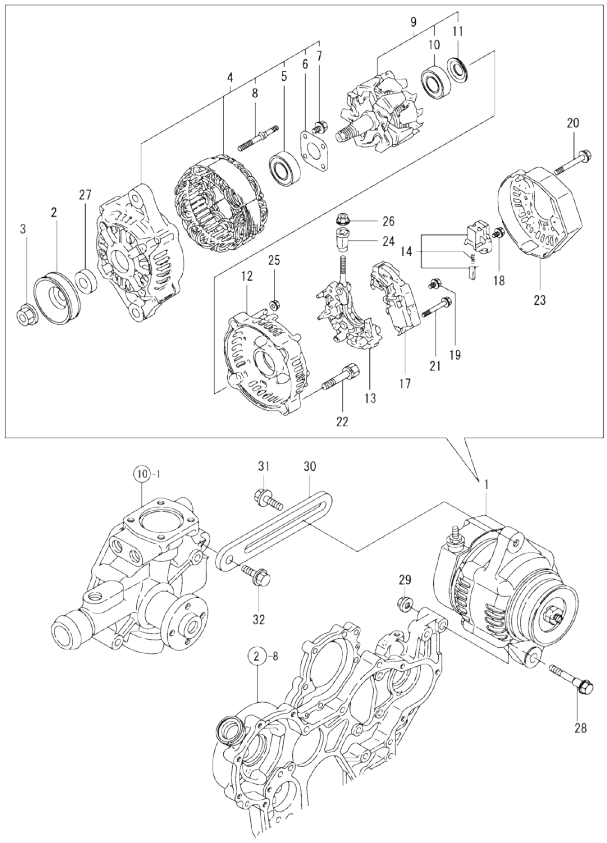

Remarks
*This item is applicable to
[(A)=EZZZZZ]or following machines.
Refer to Fig.14.

(A)=4TNV94L-NCKM
(B)=4TNV94L-NCKS
(C)=
(D)=
(E)=
(F)=

No.	Lev.	Parts No.	Description	Q'ty (A)	(B)	(C)	(D)	(E)	(F)	I	R
1	1	129961-77200	GENERATOR, 12V-55A	1	1						
2	2	119620-77461	PULLEY	1	1						
3	2	119620-77471	NUT	1	1						
4	2	129961-77421	FRAME ASSY	1	1						
5	3	119620-79200	BALL BEARING	1	1						
6	3	119620-79210	PLATE, RETAINER	1	1						
7	3	119620-79220	SCREW	4	4						
8	3	119620-79230	STUD	2	2						
9	2	129052-77380	ROTOR ASSY	1	1						
10	3	123501-79240	BEARING, BALL	1	1						
11	3	119620-79250	COVER, BEARING	1	1						
12	2	128401-77440	FRAME	1	1						
13	2	129052-79260	HOLDER	1	1						
14	2	129052-79270	HOLDER, BRUSH	1	1						
17	2	119620-77710	REGULATOR ASSY	1	1						
18	2	119620-79290	SCREW	6	6						
19	2	119620-79300	SCREW	1	1						
20	2	119620-79310	BOLT	3	3						
21	2	119620-79320	SCREW	2	2						
22	2	119620-79330	BOLT	2	2						
23	2	128401-77450	COVER	1	1						
24	2	119620-79340	BUSH, INSULATION	1	1						
25	2	119620-79350	NUT	2	2						
26	2	X9490561001	NUT	1	1						
27	2	119620-77490	COLLAR	1	1						
28	1	129960-77250	BOLT, GENERATOR	1	1						
29	1	129612-77260	NUT, ALTERNATOR	1	1						
30	1	129900-77330	ADJUSTER	1	1						
31	1	119810-77340	BOLT, ADJUSTER	1	1						
32	1	26014-080252	BOLT, M8X 25	1	1						

N:Old ←Yes/No→ New. Q:Old ←No/Yes→ New. R:Old ←Yes/Yes→ New. S:Old ←No/No→ New. W:Add. Z:Discontinued. F:Interchangeable by set. K:Q'ty Change

Copyright (C) YANMAR GLOBAL CS CO., LTD. All RightsReserved.

Fig.15. GASKET SET

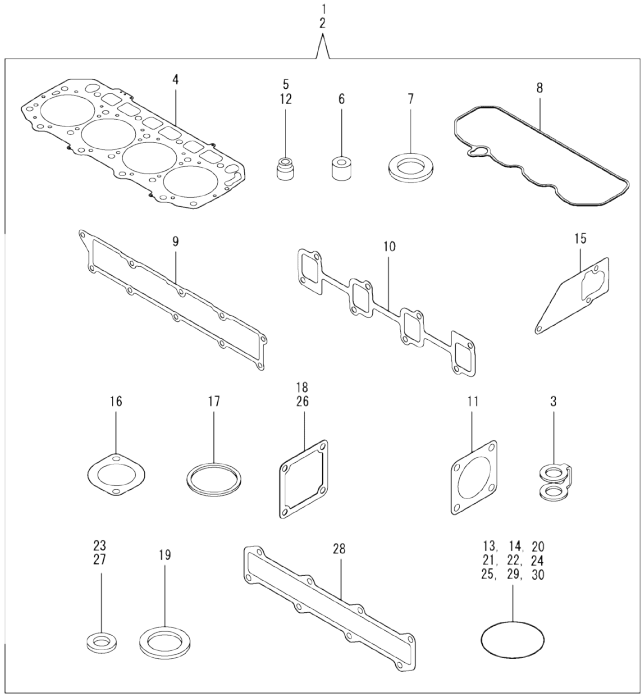

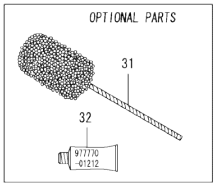

(A)=4TNV94L-NCKM (D)=
(B)=4TNV94L-NCKS (E)=
(C)= (F)=

No.	Lev.	Parts No.	Description	Q'ty (A)	(B)	(C)	(D)	(E)	(F)	I	R
1	1	729906-92650	GASKET SET	1							1
1-1	1	129906-92630	GASKET SET	1						N	1
	(A=*2009.12)										
2	1	729906-92660	GASKET SET		1						1
2-1	1	129906-92640	GASKET SET		1					N	1
		(B=*2009.12)									
3	2	123907-59550	GASKET	5	5						
4	2	129906-01340	GASKET, HEAD	1	1						
4-1	2	129906-01350	GASKET, HEAD	1	1					N	
	(A=*2009.12)	(B=*2009.12)									
5	2	124160-11340	SEAL, VALVE STEM	8	8						
6	2	119802-11870	PROTECTOR, NOZZLE	4	4						
7	2	119625-11880	SEAT, NOZZLE	4	4						
8	2	129907-11310	GASKET, BONNET	1	1						
9	2	129907-12110	GASKET, MANIFOLD	1	1						
10	2	129900-13251	GASKET		1						
11	2	128300-13230	GASKET, SILENCER	1	1						
12	2	124950-11340	SEAL, VALVE STEM	8	8						
13	2	129900-32030	O-RING, P20	2	2						
14	2	129900-32040	O-RING, P14	1	1						
15	2	129900-42061	GASKET, WATER PUMP	1	1						
16	2	129900-49560	GASKET	1	1						
17	2	121850-49550	GASKET, THERMOSTAT	1	1						
18	2	121850-77021	GASKET	1	1						
19	2	124465-44950	GASKET, 16	2	2						
20	2	24311-000070	O-RING, 1AP7.0	1	1						
21	2	24311-000120	O-RING, 1AP12.0	8	8						
22	2	24311-000320	O-RING, 1AP32.0	2	2						
23	2	22190-080002	WASHER, SEAL 6	7	7						
24	2	24341-000530	O-RING, 1AS53.0		1						
25	2	24351-030750	O-RING, 1A3075	1	1						
26	2	119129-77020	GASKET	1	1						
27	2	22190-220002	WASHER, SEAL 22	1	1						
28	2	129900-13150	GASKET	1							
29	2	24311-240100	O-RING, 1AP10A	1	1						
30	2	129900-42140	O-RING, P36	2	2						
31	1	129400-92440	HONE	1	1						1
32	1	977770-01212	GASKET, LIQUID	1	1						1

Remarks
(1) OPTIONAL PART.

N:Old $\xleftarrow[\text{No}]{\text{Yes}}$ New. Q:Old $\xleftarrow[\text{Yes}]{\text{No}}$ New. R:Old $\xleftarrow[\text{Yes}]{\text{Yes}}$ New. S:Old $\xleftarrow[\text{No}]{\text{No}}$ New. W:Add. Z:Discontinued. F:Interchangeable by set. K:Q'ty Change

Copyright (C) YANMAR GLOBAL CS CO., LTD. All RightsReserved.

Fig.16. FUEL INJECTION PUMP(INNER PARTS)

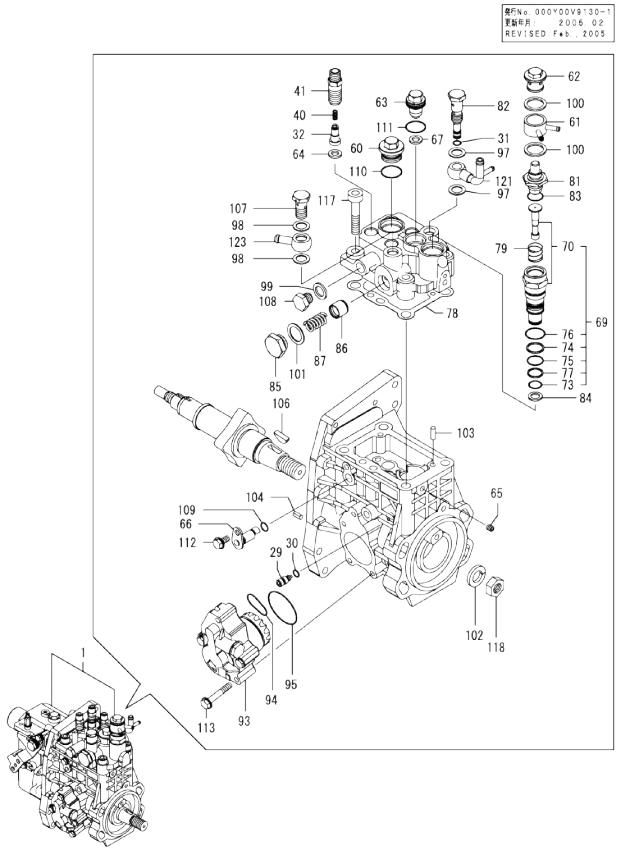

Remarks
(1) GOVERNOR ASSY(FIG.17) IS INCORPORATED IN THIS FOP.CMP (REF.NO.1).

(A)=4TNV94L-NCKM
(B)=4TNV94L-NCKS
(C)=
(D)=
(E)=
(F)=

No.	Lev.	Parts No.	Description	Q'ty (A)	(B)	(C)	(D)	(E)	(F)	I	R
1	1	729906-51340	PUMP ASSY, INJECTION	1	1						1
29	2	158600-51270	STOPPER, TAPPET	1	1						
30	2	158563-51281	O-RING, 4D S6	1	1						
31	2	158563-51281	O-RING, 4D S6	1	1						
32	2	158560-51300	VALVE ASSY, DELIVERY	4	4						
40	2	158563-51330	SPRING, DELIVERY	4	4						
41	2	158560-51340	HOLDER, DELIVERY	4	4						
60	2	158601-51550	PLUG	1	1						
61	2	158553-51551	JOINT	1	1						
62	2	158601-51570	PLUG	1	1						
63	2	129906-51560	PLUG, BARREL	1	1						
64	2	158552-51570	GASKET	4	4						
65	2	158557-51570	PLUG	1	1						
66	2	158552-51580	LIFTER	1	1						
67	2	129906-51580	GASKET	1	1						
69	2	119802-51590	TIMER SET	1	1						
70	3	119802-51600	TIMER ASSY	1	1						
73	3	158553-51670	O-RING, 1011	1	1						
74	3	119802-51680	RING, BACK UP	1	1						
75	3	119802-51690	O-RING	1	1						
76	3	24356-010200	O-RING, 4D1020	1	1						
77	3	24372-000150	RING, BACK UP T2P15	1	1						
78	2	158560-51600	GASKET	1	1						
79	2	158553-51630	SPRING, TIMER	1	1						
81	2	158553-51640	ELEMENT	1	1						
82	2	158601-51650	JOINT, OVER FLOW	1	1						
83	2	158553-51660	O-RING, P14	1	1						
84	2	158553-51680	GASKET	1	1						
85	2	158601-51790	PLUG	1	1						
86	2	158601-51770	PISTON	1	1						
87	2	158552-51780	SPRING	1	1						
93	2	158552-52100	PUMP ASSY, FUEL FEED	1	1						
94	2	158552-52310	O-RING	1	1						
95	2	158552-52400	O-RING, 4E S42	1	1						
97	2	22190-120002	WASHER, SEAL 12	2	2						
98	2	22190-120002	WASHER, SEAL 12	2	2						
99	2	22190-120002	WASHER, SEAL 12	1	1						
100	2	22190-180002	WASHER, SEAL 18	2	2						
101	2	22190-180002	WASHER, SEAL 18	1	1						
102	2	22217-180000	WASHER, SPRING 18	1	1						
103	2	22312-050140	PIN, PARALLEL M5X14	2	2						
104	2	22351-050010	PIN, SPRING 5.0X10	2	2						
106	2	144626-51090	KEY, 5X19	1	1						
107	2	23857-060000	BOLT, JOINT 6	1	1						
108	2	23887-120002	PLUG, 12	1	1						
109	2	24311-000070	O-RING, 1AP7.0	1	1						
110	2	24356-010200	O-RING, 4D1020	1	1						
111	2	24356-020210	O-RING, 4D2021	1	1						
112	2	26106-060102	BOLT, M6X 10 PLATED	1	1						
113	2	26106-060352	BOLT, M6X 35 PLATED	4	4						
117	2	26450-100452	BOLT, M10X 45	4	4						

N:Old ←Yes/No→ New. Q:Old ←No/Yes→ New. R:Old ←Yes/Yes→ New. S:Old ←No/No→ New. W:Add. Z:Discontinued. F:Interchangeable by set. K:Q'ty Change

++ CONTINUE ++

Copyright (C) YANMAR GLOBAL CS CO., LTD. All RightsReserved.

Fig.16. FUEL INJECTION PUMP(INNER PARTS)

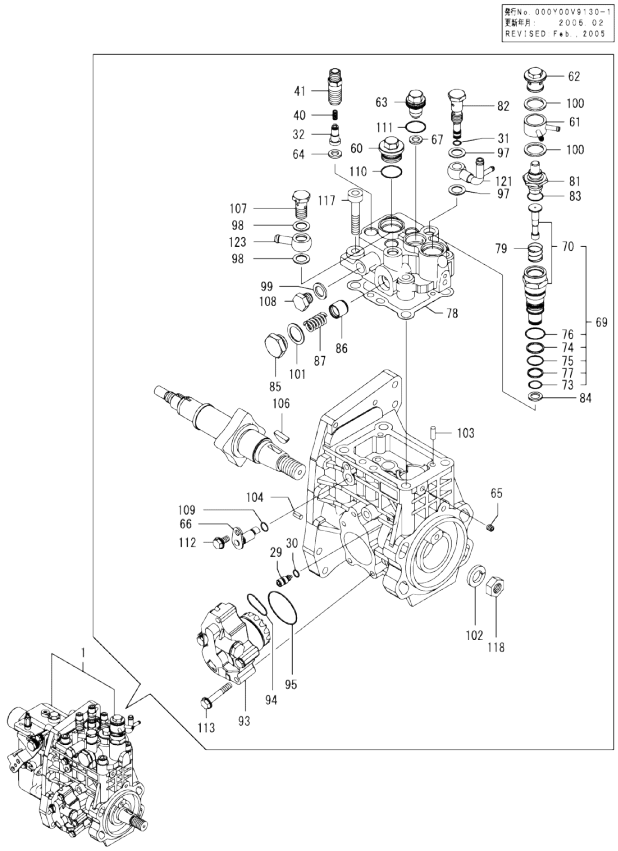

Remarks
(1) GOVERNOR ASSY(FIG.17) IS INCORPORATED IN THIS FOP.CMP (REF.NO.1).

(A)=4TNV94L-NCKM
(B)=4TNV94L-NCKS
(C)=
(D)=
(E)=
(F)=

No.	Lev.	Parts No.	Description	Q'ty (A)	(B)	(C)	(D)	(E)	(F)	I	R
118	2	26776-180002	NUT, LOCK M18	1	1						
121	2	158552-51670	JOINT, OVER FLOW	1	1						
123	2	129916-59020	JOINT, PIPE 12	1	1						

N:Old ←Yes/No→ New. Q:Old ←No/Yes→ New. R:Old ←Yes/Yes→ New. S:Old ←No/No→ New. W:Add. Z:Discontinued. F:Interchangeable by set. K:Q'ty Change

Copyright (C) YANMAR GLOBAL CS CO., LTD. All RightsReserved.

Fig.17. GOVERNOR (INNER PARTS)

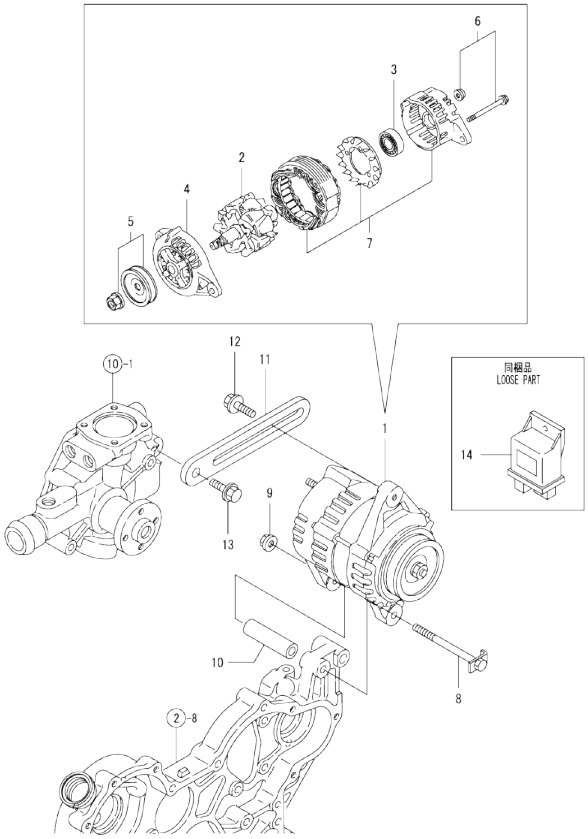

Remarks
* THIS FIGURE(GOVERNOR ASSY)IS INCORPORATED IN THE FUEL INJECTION PUMP ASSY(FIG.16).

(A)=4TNV94L-NCKM
(B)=4TNV94L-NCKS
(C)=
(D)=
(E)=
(F)=

No.	Lev.	Parts No.	Description	Q'ty (A)	(B)	(C)	(D)	(E)	(F)	I	R
2	2	158560-61050	GASKET	1	1						
3	2	158560-61061	COVER, GOVERNOR CASE	1	1						
4	2	158560-61071	GASKET	1	1						
6	2	129155-51280	O-RING, S6	1	1						
26	2	129255-61410	NUT, LOCK	1	1						
27	2	129255-61420	SPRING, RETURN	1	1						
28	2	158560-61430	RETAINER, SHAFT	1	1						
29	2	158560-61441	LEVER, REGULATOR	1	1						
31	2	129155-61460	BOLT, IDLE	1	1						
52	2	26116-060102	BOLT, M6X 10 PLATED	1	1						
60	2	119660-61901	RETAINER, SHAFT	1	1						
61	2	22190-120002	WASHER, SEAL 12	1	1						
63	2	23887-120002	PLUG, 12	1	1						
64	2	26106-060102	BOLT, M6X 10 PLATED	1	1						
65	2	26106-060102	BOLT, M6X 10 PLATED	1	1						
66	2	26756-060002	NUT, LOCK M6	1	1						
75	2	24341-000280	O-RING, 1AS28.0	1	1						
76	2	26106-060142	BOLT, M6X 14 PLATED	6	6						
77	2	26106-060252	BOLT, M6X 25 PLATED	8	8						
78	2	26106-060402	BOLT, M6X 40 PLATED	2	2						
123	2	119233-77932	SOLENOID, STOP	1	1						

N:Old ←Yes/No→ New. Q:Old ←No/Yes→ New. R:Old ←Yes/Yes→ New. S:Old ←No/No→ New. W:Add. Z:Discontinued. F:Interchangeable by set. K:Q'ty Change

Copyright (C) YANMAR GLOBAL CS CO., LTD. All RightsReserved.

Parts No. Index

Parts No.	Fig. No.	Ref. No.
105025-59750	13	7
114250-53080	12	5
114250-53120	12	9
114250-53130	12	10
114250-53140	12	11
114250-53210	12	12
114250-53400	12	13
119000-35140	9	3
119005-35151	9	4
119005-77050	5	7
119107-13190	6	7
119129-77020	5	5
	15	26
119129-77520	5	8
119131-18320	6	6
119233-77932	17	123
119260-34810	9	2
119305-59120	12	27
119593-11301	4	28
119620-11180	4	17
119620-49290	10	41
119620-77461	18	2
119620-77471	18	3
119620-77490	18	27
119620-77710	18	17
119620-79200	18	5
119620-79210	18	6
119620-79220	18	7
119620-79230	18	8
119620-79250	18	11
119620-79290	18	18
119620-79300	18	19
119620-79310	18	20
119620-79320	18	21
119620-79330	18	22
119620-79340	18	24
119620-79350	18	25
119625-11880	4	26
	15	7
119640-01640	3	8
119640-61400	4	61
119643-66900	14	18
119650-77910	14	14
119660-61901	17	60
119802-11870	4	68
	15	6
119802-13610	6	4
119802-13720	6	5
119802-49113	10	13
119802-51590	16	69

Parts No.	Fig. No.	Ref. No.
119802-51600	16	70
119802-51680	16	74
119802-51690	16	75
119802-55610	13	1
119802-55700	13	17
119802-55710	13	18
119802-55800	13	2
119802-59950	13	16
119810-77340	14	12
	18	31
119836-77201	14	1
119836-77920	14	7
120130-22301	8	24
121252-39450	9	12
121450-42450	10	36
121850-21130	8	14
121850-21290	8	5
121850-21680	8	13
121850-21920	8	6
121850-49550	10	30
	15	17
121850-49800	10	33
121850-77021	5	6
	15	18
122780-59100	12	26
123501-79240	18	10
123900-13610	6	10
123900-13630	6	11
123900-25060	7	10
123907-03100	4	54
123907-03110	4	55
123907-03120	4	56
123907-03140	4	57
123907-11280	4	33
123907-11550	4	3
123907-11601	12	25
123907-11820	4	10
123907-11830	4	23
123907-25909	7	17
123907-59540	13	9
123907-59550	13	10
	15	3
123907-59560	13	14
124160-01751	2	35
	4	49
124160-11340	4	18
	15	5
124160-11360	4	64
124411-01780	3	6
124465-44950	10	35

Parts No.	Fig. No.	Ref. No.
124465-44950	15	19
124722-59050	10	20
		23
	13	12
124766-59050	13	5
124950-11340	4	19
	15	12
128300-13230	6	13
	15	11
128300-77920	14	19
128401-77440	18	12
128401-77450	18	23
129001-91810	2	24
		25
129005-59830	9	17
129052-77380	18	9
129052-79260	18	13
129052-79270	18	14
129100-01580	2	5
	3	1
129100-55690	13	19
129136-77251	14	8
129150-02450	7	4
129150-11230	4	36
		40
129150-11750	4	22
		37
		41
129150-14200	7	1
129150-25920	7	14
129150-59131	12	30
		34
129150-77340	14	10
129155-51280	17	6
129155-61460	17	31
129211-77920	14	17
129255-61410	17	26
129255-61420	17	27
129400-92440	15	31
129457-59010	13	4
129486-59551	13	11
129550-59120	12	31
129612-77260	14	9
	18	29
129612-77700	14	2
129612-77710	14	3
129612-77730	14	4
129612-77740	14	5
129612-77750	14	6
129900-01200	1	31

Parts No.	Fig. No.	Ref. No.
129900-01250	1	5
129900-01740	2	6
129900-01780	2	4
129900-01850	2	39
129900-01870	2	40
129900-02020	1	7
129900-02340	1	34
129900-02410	1	10
129900-02930	1	28
129900-02940	1	37
129900-07900	4	1
129900-13120	6	1
129900-13150	6	3
	15	28
129900-13251	6	9
	15	10
129900-14100	7	7
129900-21200	8	4
129900-21600	8	17
129900-21640	8	8
129900-23000	8	26
129900-23200	8	31
129900-23600	8	32
129900-23610	8	34
129900-23910	8	30
129900-25100	7	11
129900-32001	2	11
129900-32030	2	22
	9	5
	15	13
129900-32040	2	23
	15	14
129900-42061	10	24
	15	15
129900-42070	10	14
129900-42140	10	15
	15	30
129900-42161	10	3
129900-42170	10	4
129900-42461	10	25
129900-49551	10	31
129900-49560	10	32
	15	16
129900-77330	14	11
	18	30
129902-21000	8	1
129906-01340	1	32
	15	4
129906-01350	1	32 -2
	15	4 -1

Parts No. Index

Parts No.	Fig. No.	Ref. No.
129906-01500	2	8
129906-22050	8	20
129906-22080	8	18
129906-22090	8	18 -1
129906-22900	8	36 -1
129906-22910	8	36 -2
129906-34810	9	1
129906-51560	16	63
129906-51580	16	67
129906-53000	12	2
129906-59820	12	38
129906-59830	12	39
129906-59840	12	40
129906-92630	15	1 -1
129906-92640	15	2 -1
129907-01190	1	33
129907-01331	1	32 -1
129907-01950	11	1
129907-01960	11	2
129907-03010	4	51
129907-03060	4	52
129907-03070	4	53
129907-11100	4	14
129907-11110	4	15
129907-11120	4	16
129907-11250	4	30
129907-11260	4	31
129907-11270	4	32
129907-11310	4	60
	15	8
129907-11320	4	50
129907-11341	4	29
129907-11510	4	20
129907-11650	4	34
129907-11660	4	38
129907-11700	4	4
129907-11800	4	8
129907-11910	4	67
129907-11920	4	42
129907-11950	4	47
129907-12100	5	1
129907-12110	5	2
	15	9
129907-14400	7	2
129907-14581	7	3
129907-21660	8	9
129907-39060	9	13
129907-42050	10	1
129907-49610	10	17
129907-49710	10	18

Parts No.	Fig. No.	Ref. No.
129907-49750	10	19
129907-59140	13	8
129907-59710	12	35
129907-59810	12	37
129908-14581	7	3 -1
129916-01600	3	2
129916-01630	3	3
129916-13210	6	8
129916-21450	8	42
129916-21460	8	43
129916-21570	8	15
129916-21670	8	11
129916-22950	8	38 -1
129916-44740	10	37
129916-59020	16	123
129927-77520	5	8 -1
129930-01710	3	7
129930-35000	9	6
129930-42400	10	27
129935-44710	10	38 -1
129940-34840	9	25
129953-25300	7	16
129957-59120	13	6
129960-21640	8	10
129960-77250	18	28
129961-77200	18	1
129961-77421	18	4
129962-49620	10	21
129962-49720	10	22
144626-51090	16	106
158552-51570	16	64
158552-51580	16	66
158552-51670	16	121
158552-51780	16	87
158552-52100	16	93
158552-52310	16	94
158552-52400	16	95
158553-51551	16	61
158553-51630	16	79
158553-51640	16	81
158553-51660	16	83
158553-51670	16	73
158553-51680	16	84
158557-51570	16	65
158560-51300	16	32
158560-51340	16	41
158560-51600	16	78
158560-61050	17	2
158560-61061	17	3
158560-61071	17	4

Parts No.	Fig. No.	Ref. No.
158560-61430	17	28
158560-61441	17	29
158563-51150	7	18
158563-51281	16	30
		31
158563-51330	16	40
158600-51270	16	29
158601-51550	16	60
158601-51570	16	62
158601-51650	16	82
158601-51770	16	86
158601-51790	16	85
171051-01921	1	6
171056-49120	10	40
22190-080002	9	18
		20
		22
	13	15
	15	23
22190-120002	16	97
		98
		99
	17	61
22190-180002	16	100
		101
22190-220002	3	10
	15	27
22217-180000	7	19
	16	102
22252-000300	8	25
22312-050140	16	103
22351-050010	16	104
22351-060012	1	11
22512-070140	7	8
	8	7
22857-500100	4	62
		63
23857-030000	9	19
23857-060000	16	107
23876-020000	4	11
23876-030000	1	12
		13
		14
	4	12
	10	9
23887-120002	16	108
	17	63
24190-080001	10	10
24311-000070	2	26
	15	20

Parts No.	Fig. No.	Ref. No.
24311-000070	16	109
24311-000120	4	27
		65
	15	21
24311-000160	13	21
24311-000320	2	38
	4	66
	15	22
24311-240100	9	26
	15	29
24321-000650	13	20
24341-000280	17	75
24341-000530	8	12
	15	24
24351-030750	2	27
	15	25
24356-010200	16	76
		110
24356-020210	16	111
24372-000150	16	77
25132-004600	10	26
25132-004700	10	28
26014-080252	14	13
	18	32
26106-060102	16	112
	17	64
		65
26106-060142	17	76
26106-060162	12	41
26106-060252	17	77
26106-060352	16	113
26106-060402	17	78
26106-080102	10	29
26106-080122	3	11
	9	11
		21
		23
		24
26106-080162	2	28
		29
		36
	4	2
	7	9
	9	27
	11	4
26106-080182	12	42
26106-080202	2	30
26106-080222	8	44
	11	5
		6

Parts No. Index

Parts No.	Fig. No.	Ref. No.
26106-080252	10	34
26106-080302	13	3
26106-080402	2	31
		32
	4	44
	5	9
	10	39 -1
26106-080452	2	33
26106-080552	5	3
	7	15
	10	16
26106-080602	4	45
		46
26106-080852	5	4
26106-080902	5	10
26106-100202	11	7
26116-060102	17	52
26116-060162	10	11
26206-100202	3	4
26206-100352	3	5
26216-100302	2	10
26226-080222	4	43
26306-080002	4	48
	6	12
26306-100002	2	34
26450-100452	16	117
26577-060142	10	12
26756-060002	17	66
26776-180002	7	20
	16	118
27241-300000	1	15
27241-400000	4	13
27310-070001	4	24
729900-02800	1	25
729906-01560	1	1
729906-22900	8	36
729906-22950	8	38
729906-51340	11	3
	16	1
729906-53100	12	1
729906-92650	15	1
729906-92660	15	2
729907-01550	2	1
977770-01212	2	37
	3	12
	4	69
	15	32
X9490561001	18	26

Parts No.	Fig. No.	Ref. No.

Parts No.	Fig. No.	Ref. No.

Parts No.	Fig. No.	Ref. No.