YANMAR

PARTS CATALOG

0CW10-M22100EN

Last update Feb., 2013

PREFACE

1. This parts catalog is the 1st edition of 4TNV94L-PDBWK for Doosan Infracore Ltd.

Pub.No. : 000Y00W2210

Published : September,2007

Contents

0CW10-M22100

Fig. No.	Fig. Name
4TNV94L-PDBWK	
1.	CYLINDER BLOCK
2.	GEAR HOUSING
3.	FLYWHEEL HOUSING & OIL SUMP
4.	CYLINDER HEAD & BONNET
5.	SUCTION MANIFOLD
6.	EXHAUST MANIFOLD
7.	CAMSHAFT & DRIVING GEAR
8.	CRANKSHAFT & PISTON
9.	LUB. OIL SYSTEM
10.	COOLING WATER SYSTEM
11.	FUEL INJECTION PUMP
12.	GOVERNOR
13.	FUEL INJECTION VALVE
14.	FUEL PIPE
15.	STARTER MOTOR
16.	GENERATOR
17.	GASKET SET

Fig.1. CYLINDER BLOCK

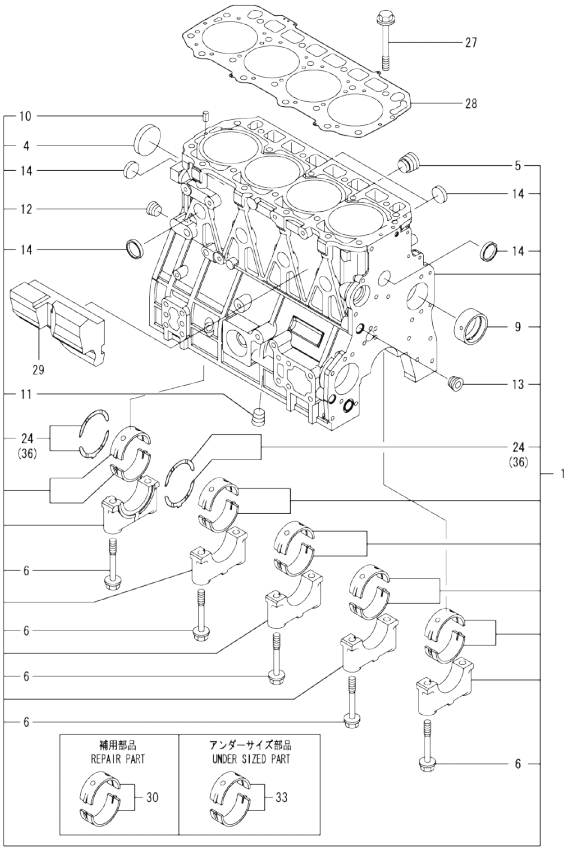

Remarks
(1) REPAIR PART.
(2) UNDER-SIZED(U.S=0.25)PART.
(3) OVER-SIZED(O.S=0.25)PART.

(A)=4TNV94L-PDBWK (D)=
(B)= (E)=
(C)= (F)=

No.	Lev.	Parts No.	Description	Q'ty (A)	(B)	(C)	(D)	(E)	(F)	I	R
1	1	729906-01561	BLOCK ASSY, CYLINDER	1							
4	2	129900-01250	PLUG, DISH TYPE 55	1							
5	2	171051-01921	PLUG, NPTF1	1							
6	2	129900-02020	BOLT, METAL CAP	10							
9	2	129900-02410	BUSH, CAMSHAFT	1							
10	2	22351-060012	PIN, SPRING 6.0X12	2							
11	2	23876-030000	PLUG, R03	1							
12	2	23876-030000	PLUG, R03	1							
13	2	23876-030000	PLUG, R03	1							
14	2	27241-300000	PLUG 30	8							
24	2	129900-02931	BEARING ASSY, THRUST	2							
27	1	129900-01200	BOLT, CYLINDER HEAD	18							
28	1	129906-01340	GASKET, HEAD	1							
28-1	1	129907-01331	GASKET, HEAD	1						N	
	(A=*2006.06)										
28-2	1	129906-01350	GASKET, HEAD	1						N	
	(A=*2009.12)										
29	1	129907-01190	SPACER	1							
30	1	729900-02801	BEARING, MAIN	5							1
33	1	129900-02341	BEARING ASSY, MAIN	5							2
36	1	129900-02941	BEARING, THRUST 0.25	2							3

N:Old ←Yes/No→ New. Q:Old ←No/Yes→ New. R:Old ←Yes/Yes→ New. S:Old ←No/No→ New. W:Add. Z:Discontinued. F:Interchangeable by set. K:Q'ty Change

Copyright (C) YANMAR GLOBAL CS CO., LTD. All RightsReserved.

Fig.2. GEAR HOUSING

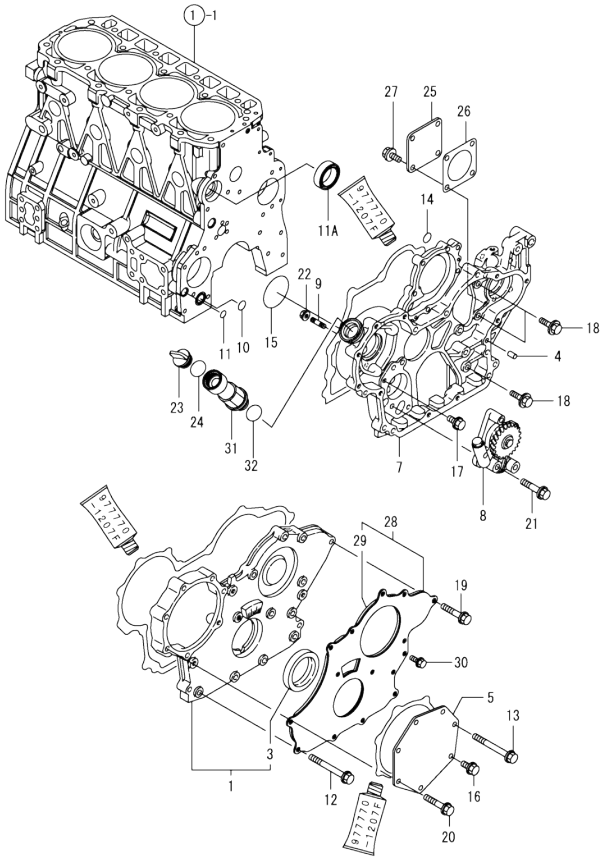

(A)=4TNV94L-PDBWK (D)=
(B)= (E)=
(C)= (F)=

No.	Lev.	Parts No.	Description	Q'ty (A)	(B)	(C)	(D)	(E)	(F)	I	R
1	1	729907-01559	COVER ASSY, CASE	1							
3	2	129916-01800	SEAL, OIL	1							
4	1	129100-01580	PIN, PARALLEL 8X16	4							
5	1	129951-01740	COVER	1							
7	1	129907-01500	CASE, GEAR	1							
8	1	129900-32001	PUMP ASSY, OIL	1							
9	1	26216-100302	STUD, M10X 30	4							
10	1	129900-32030	O-RING, P20	1							
11	1	129900-32040	O-RING, P14	1							
11A	1	129927-42140	GASKET, PUMP OUTLET	1						W	
	(A=EG2851)										
12	1	129001-91810	BOLT, M8X70	6							
13	1	129001-91810	BOLT, M8X70	1							
14	1	24311-000070	O-RING, 1AP7.0	1							
15	1	24351-030750	O-RING, 1A3075	1							
16	1	26106-080162	BOLT, M8X 16 PLATED	1							
17	1	26106-080162	BOLT, M8X 16 PLATED	1							
18	1	26106-080202	BOLT, M8X 20 PLATED	3							
19	1	26106-080402	BOLT, M8X 40 PLATED	5							
20	1	26106-080402	BOLT, M8X 40 PLATED	5							
21	1	26106-080452	BOLT, M8X 45 PLATED	3							
22	1	26306-100002	NUT, M10	4							
23	1	124160-01751	CAP, FILLER	1							
24	1	24311-000320	O-RING, 1AP32.0	1							
25	1	124240-01871	COVER, PUMP	1							
26	1	124240-01883	GASKET	1							
27	1	26106-080162	BOLT, M8X 16 PLATED	4							
28	1	129900-01850	COVER ASSY,GEAR CASE	1							
29	2	129900-01870	SPONGE, GEAR CASE	1							
30	1	26106-080162	BOLT, M8X 16 PLATED	3							
31	1	171031-11741	PIPE	1							
32	1	24311-000320	O-RING, 1AP32.0	1							

N:Old ◄Yes/No► New. Q:Old ◄No/Yes► New. R:Old ◄Yes/Yes► New. S:Old ◄No/No► New. W:Add. Z:Discontinued. F:Interchangeable by set. K:Q'ty Change

Copyright (C) YANMAR GLOBAL CS CO., LTD. All RightsReserved.

Fig.3. FLYWHEEL HOUSING & OIL SUMP

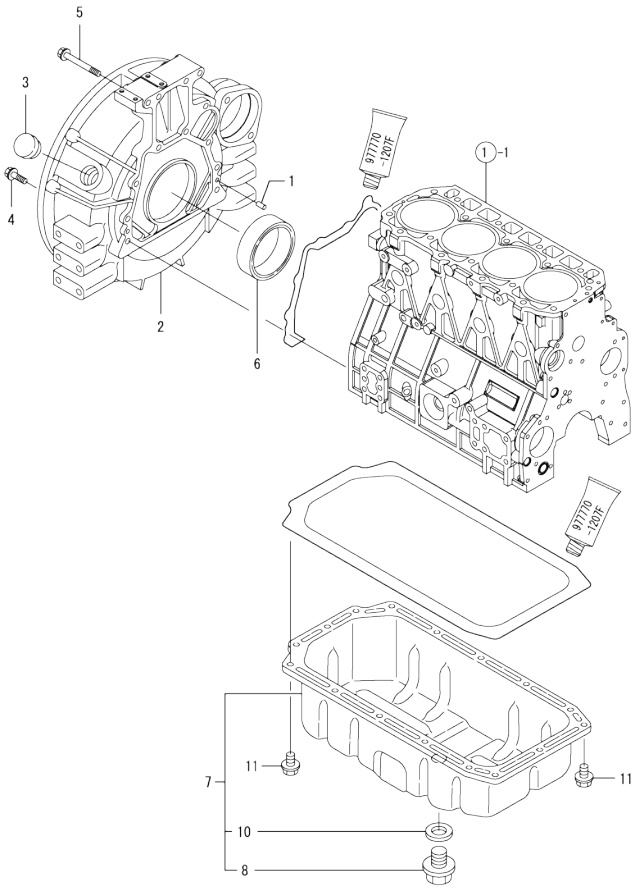

(A)=4TNV94L-PDBWK
(B)=
(C)=
(D)=
(E)=
(F)=

No.	Lev.	Parts No.	Description	Q'ty (A)	(B)	(C)	(D)	(E)	(F)	I	R
1	1	129100-01580	PIN, PARALLEL 8X16	2							
2	1	129981-01600	HOUSING, FLYWHEEL	1							
3	1	119620-01750	CAP	1							
4	1	26206-100352	BOLT, M10X 35 PLATED	9							
5	1	26206-100702	BOLT, M10X 70 PLATED	4							
6	1	129916-01790	SEAL, D115/95XT11	1							
7	1	129916-01710	OIL PAN ASSY	1							
8	2	119640-01640	PLUG, DRAIN M22	1							
10	2	22190-220002	WASHER, SEAL 22	1							
11	1	26106-080122	BOLT, M8X 12 PLATED	16							

N:Old ◄Yes/No► New. Q:Old ◄No/Yes► New. R:Old ◄Yes/Yes► New. S:Old ◄No/No► New. W:Add. Z:Discontinued. F:Interchangeable by set. K:Q'ty Change

Copyright (C) YANMAR GLOBAL CS CO., LTD. All RightsReserved.

Fig.4. CYLINDER HEAD & BONNET

(A)=4TNV94L-PDBWK
(B)=
(C)=
(D)=
(E)=
(F)=

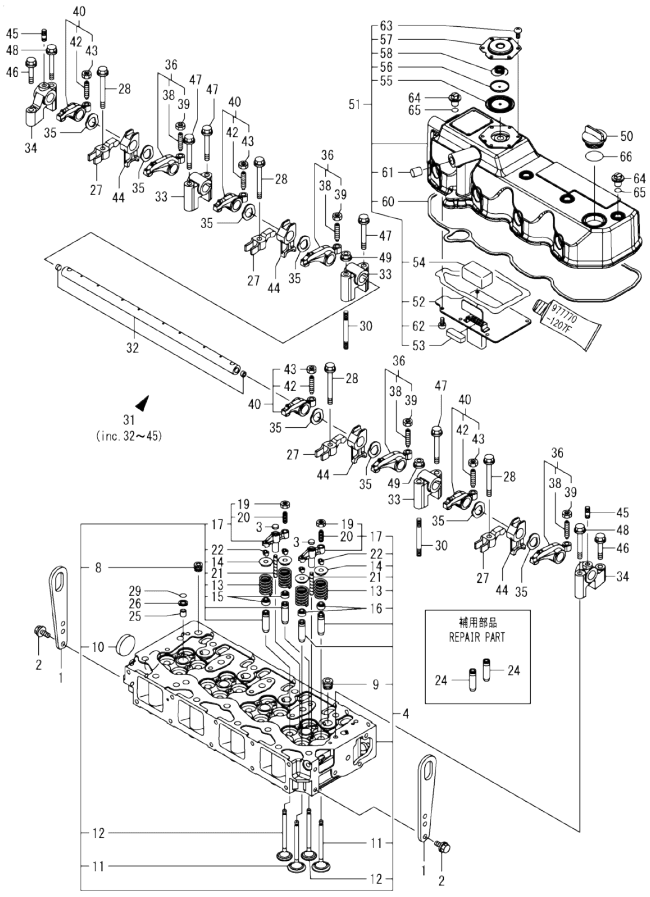

No.	Lev.	Parts No.	Description	Q'ty (A)	(B)	(C)	(D)	(E)	(F)	I	R
1	1	129900-07900	LIFTER, ENGINE	2							
2	1	26106-080162	BOLT, M8X 16 PLATED	4							
3	1	123907-11550	SEAT, VALVE BRIDGE	8							
4	1	129907-11700	HEAD ASSY, CYLINDER	1							
8	2	23876-020000	PLUG, R02	1							
9	2	23876-030000	PLUG, R03	4							
10	2	27241-400000	PLUG, 40	1							
11	2	129907-11100	VALVE, SUCTION	8							
12	2	129907-11110	VALVE, EXHAUST	8							
13	2	129907-11120	SPRING, VALVE	16							
14	2	119620-11180	RETAINER, SPRING	16							
15	2	119803-11340	SEAL, VALVE STEM	8							
16	2	124160-11340	SEAL, VALVE STEM	8							
17	2	129907-11510	BRIDGE ASSY, VALVE	8							
19	3	129150-11750	NUT, M8	8							
20	3	123907-11830	ADJUSTER	8							
21	2	123907-11820	GUIDE, BRIDGE	8							
22	2	27310-070001	COTTER, 7	16							
24	1	129907-11800	GUIDE, VALVE	16							1
25	1	119802-11870	PROTECTOR, NOZZLE	4							
26	1	119625-11880	SEAT, NOZZLE	4							
27	1	129907-11910	RETAINER, NOZZLE	4							
28	1	129907-11950	BOLT, M8X75	4							
29	1	24311-000120	O-RING, 1AP12.0	4							
30	1	119593-11301	BOLT, STUD M8X80	2							
31	1	129907-11341	SHAFT ASSY, ROCKER	1							
32	2	129907-11250	SHAFT, ROCKER ARM	1							
33	2	129907-11260	SUPPORT, ROCKER ARM	3							
34	2	129907-11270	SUPPORT, ROCKER ARM	2							
35	2	123907-11280	WASHER	8							
36	2	129907-11650	ARM ASSY, ROCKER	4							
38	3	129150-11230	SCREW, VALVE ADJUST	4							
39	3	129150-11750	NUT, M8	4							
40	2	129907-11660	ARM ASSY, ROCKER	4							
42	3	129150-11230	SCREW, VALVE ADJUST	4							
43	3	129150-11750	NUT, M8	4							
44	2	129907-11920	RETAINER, NOZZLE	4							
45	2	26226-080222	STUD, M8X 22	2							
46	1	26106-080402	BOLT, M8X 40 PLATED	2							
47	1	26106-080602	BOLT, M8X 60 PLATED	4							
48	1	26106-080602	BOLT, M8X 60 PLATED	2							
49	1	26306-080002	NUT, M8	2							
50	1	124160-01751	CAP, FILLER	1							
51	1	129907-11321	BONNET ASSY, HEAD	1							
52	2	129907-03011	PLATE, BAFFLE	1							
53	2	129907-03061	BAFFLE, BREATHER	1							
54	2	129907-03070	BAFFLE, BREATHER	1							
55	2	123907-03100	DIAPHRAGM	1							
56	2	123907-03110	PLATE	1							
57	2	123907-03120	PLATE, BREATHER	1							
58	2	123907-03140	SPRING, DIAPHRAGM	1							

Remarks
(1) REPAIR PART.

N:Old ←Yes/No→ New. Q:Old ←No/Yes→ New. R:Old ←Yes/Yes→ New. S:Old ←No/No→ New. W:Add. Z:Discontinued. F:Interchangeable by set. K:Q'ty Change

++ CONTINUE ++

Copyright (C) YANMAR GLOBAL CS CO., LTD. All RightsReserved.

Fig.4. CYLINDER HEAD & BONNET

(A)=4TNV94L-PDBWK (D)=
(B)= (E)=
(C)= (F)=

No.	Lev.	Parts No.	Description	Q'ty (A)	(B)	(C)	(D)	(E)	(F)	I	R
60	2	129907-11310	GASKET, BONNET	1							
61	2	119640-61400	PLUG	1							
62	2	22857-500100	SCREW, 5X10	6							
63	2	22857-500100	SCREW, 5X10	6							
64	1	124160-11360	KNOB	4							
65	1	24311-000120	O-RING, 1AP12.0	4							
66	1	24311-000320	O-RING, 1AP32.0	1							

Remarks
(1) REPAIR PART.

N:Old ←Yes/No→ New. Q:Old ←No/Yes→ New. R:Old ←Yes/Yes→ New. S:Old ←No/No→ New. W:Add. Z:Discontinued. F:Interchangeable by set. K:Q'ty Change

Copyright (C) YANMAR GLOBAL CS CO., LTD. All RightsReserved.

Fig.5. SUCTION MANIFOLD

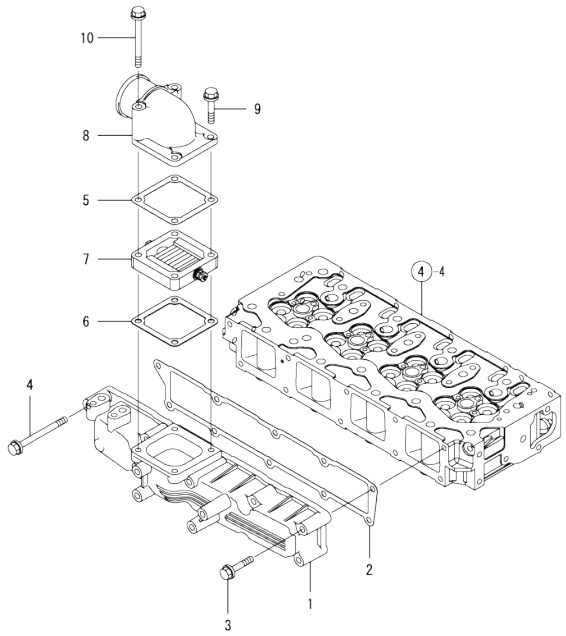

(A)=4TNV94L-PDBWK
(B)=
(C)=
(D)=
(E)=
(F)=

No.	Lev.	Parts No.	Description	Q'ty (A)	(B)	(C)	(D)	(E)	(F)	I	R
1	1	129907-12100	MANIFOLD, AIR INTAKE	1							
2	1	129907-12110	GASKET, MANIFOLD	1							
3	1	26106-080552	BOLT, M8X 55 PLATED	9							
4	1	26106-080852	BOLT, M8X 85 PLATED	1							
5	1	119129-77020	GASKET	1							
6	1	121850-77021	GASKET, AIR HEATER	1							
7	1	119005-77050	HEATER, AIR	1							
8	1	119129-77520	BEND	1							
9	1	26106-080402	BOLT, M8X 40 PLATED	2							
10	1	26106-080902	BOLT, M8X 90 PLATED	2							

N:Old ←Yes/No→ New. Q:Old ←No/Yes→ New. R:Old ←Yes/Yes→ New. S:Old ←No/No→ New. W:Add. Z:Discontinued. F:Interchangeable by set. K:Q'ty Change

Copyright (C) YANMAR GLOBAL CS CO., LTD. All RightsReserved.

Fig.6. EXHAUST MANIFOLD

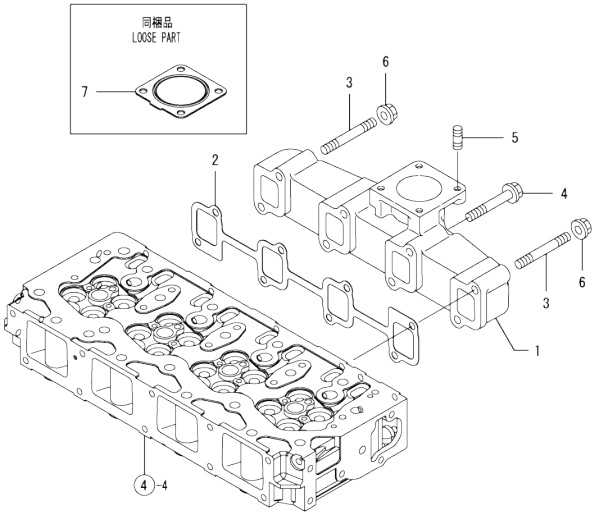

(A)=4TNV94L-PDBWK (D)=
(B)= (E)=
(C)= (F)=

No.	Lev.	Parts No.	Description	Q'ty (A)	(B)	(C)	(D)	(E)	(F)	I	R
1	1	129900-13200	MANIFOLD, EXHAUST	1							
2	1	129900-13251	GASKET, EXH.MANIFOLD	1							
3	1	123900-13610	BOLT, STUD M8X80	2							
4	1	123900-13630	BOLT, M8X80	6							
5	1	119131-18320	BOLT, STUD M8X22	4							
6	1	26306-080002	NUT, M8	2							
7	1	129930-13201	GASKET, SILENCER	1							

N:Old ←Yes/No→ New. Q:Old ←No/Yes→ New. R:Old ←Yes/Yes→ New. S:Old ←No/No→ New. W:Add. Z:Discontinued. F:Interchangeable by set. K:Q'ty Change

Copyright (C) YANMAR GLOBAL CS CO., LTD. All RightsReserved.

Fig.7. CAMSHAFT & DRIVING GEAR

(A)=4TNV94L-PDBWK
(B)=
(C)=
(D)=
(E)=
(F)=

No.	Lev.	Parts No.	Description	Q'ty (A)	(B)	(C)	(D)	(E)	(F)	I	R
1	1	129150-14200	TAPPET	8							
2	1	129907-14400	PUSH-ROD	8							
3	1	129907-14581	CAMSHAFT ASSY	1							
3-1	1	129908-14581	CAMSHAFT ASSY	1						N	
	(A=EZZZZZ)										
4	2	129150-02450	BEARING, THRUST	1							
6	2	129900-14100	GEAR, CAMSHAFT	1							
7	2	22512-070140	KEY, 7X 14	1							
8	1	26106-080162	BOLT, M8X 16 PLATED	2							
9	1	123900-25060	SHAFT, IDLE GEAR	1							
10	1	129900-25100	GEAR ASSY, IDLE	1							
13	1	129150-25920	BUSH, IDLE GEAR	1							1
14	1	26106-080552	BOLT, M8X 55 PLATED	3							
15	1	129953-25300	BOLT	4							
16	1	129907-25900	GEAR, PUMP	1							
17	1	158563-51150	FLANGE	1							
18	1	22217-180000	WASHER, SPRING 18	1							
19	1	26776-180002	NUT, LOCK M18	1							

Remarks
(1) REPAIR PART.

N:Old $\xleftarrow[\text{No}]{\text{Yes}}$ New. Q:Old $\xleftarrow[\text{Yes}]{\text{No}}$ New. R:Old $\xleftarrow[\text{Yes}]{\text{Yes}}$ New. S:Old $\xleftarrow[\text{No}]{\text{No}}$ New. W:Add. Z:Discontinued. F:Interchangeable by set. K:Q'ty Change

Copyright (C) YANMAR GLOBAL CS CO., LTD. All RightsReserved.

Fig.8. CRANKSHAFT & PISTON

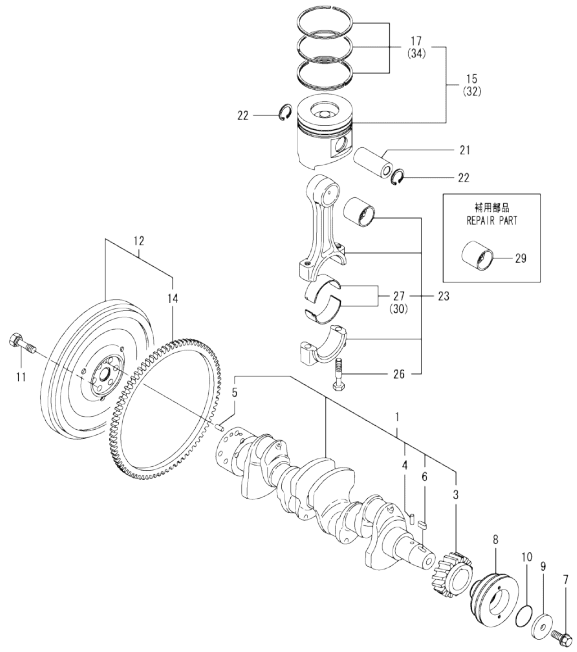

(A)=4TNV94L-PDBWK
(B)=
(C)=
(D)=
(E)=
(F)=

No.	Lev.	Parts No.	Description	Q'ty (A)	(B)	(C)	(D)	(E)	(F)	I	R
1	1	129902-21000	CRANKSHAFT ASSY	1							
3	2	129900-21200	GEAR, CRANKSHAFT	1							
4	2	121850-21290	PIN	1							
5	2	121850-21920	PIN, PARALLEL 10X22	1							
6	2	22512-070140	KEY, 7X 14	1							
7	1	129916-21610	BOLT	1							
8	1	129916-21620	V-PULLEY, CRANKSHAFT	1							
9	1	129960-21640	WASHER	1							
10	1	24341-000530	O-RING, 1AS53.0	1							
11	1	121850-21130	BOLT, FLYWHEEL	6							
12	1	129916-21590	FLYWHEEL ASSY	1							
14	2	129900-21600	GEAR, RING	1							
15	1	129906-22080	PISTON ASSY	4							
15-1	1	129906-22090	PISTON ASSY	4						F	4
	(A=*2009.12)										
17	2	129906-22050	RING SET, PISTON	4							
21	1	120130-22301	PIN, PISTON	4							
22	1	22252-000300	RING, 30	8							
23	1	129900-23001	ROD ASSY, CONNECTING	4							
26	2	129900-23200	BOLT, CONNECTING ROD	8							
27	2	129900-23601	BEARING, CRANK PIN	4							
29	1	129900-23911	BEARING, PISTON PIN	4							1
30	1	129900-23610	BEARING ASSY, 0.25US	4							2
32	1	729906-22900	PISTON ASSY, 0.25 OS	4							3
32-1	1	129906-22900	PISTON ASSY, 0.25 OS	4						R	3
	(A=EXXXXX)										
32-2	1	129906-22910	PISTON ASSY, 0.25 OS	4						F	3
	(A=*2009.12)										
34	2	729906-22950	RING SET, 0.25 OS	4							3
34-1	2	129916-22950	RING SET, 0.25 OS	4						R	3
	(A=EXXXXX)										

Remarks
(1) Repair part.
(2) Under-sized (U.S.=0.25) part.
(3) Over-sized (O.S.=0.25) part.
(4) Ref. No.15 is interchangeable with a set of Ref. No.15-1 and Fig.1 Ref. No.28-2.

N:Old ←Yes/No→ New. Q:Old ←No/Yes→ New. R:Old ←Yes/Yes→ New. S:Old ←No/No→ New. W:Add. Z:Discontinued. F:Interchangeable by set. K:Q'ty Change

Copyright (C) YANMAR GLOBAL CS CO., LTD. All RightsReserved.

Fig.9. LUB. OIL SYSTEM

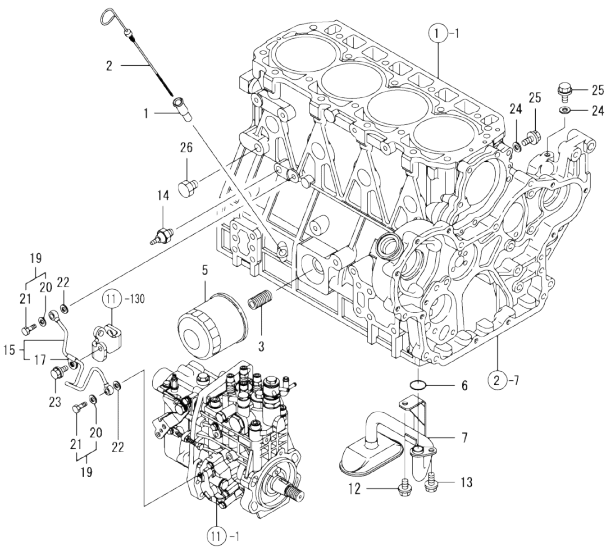

(A)=4TNV94L-PDBWK (D)=
(B)= (E)=
(C)= (F)=

No.	Lev.	Parts No.	Description	Q'ty (A)	(B)	(C)	(D)	(E)	(F)	I	R
1	1	121520-34810	GUIDE, DIPSTICK	1							
2	1	129906-34851	DIPSTICK	1							
3	1	119000-35140	BOLT, STUD FILTER	1							
5	1	119005-35151	FILTER, D80X100	1							1
6	1	129900-32030	O-RING, P20	1							
7	1	129953-35000	PIPE ASSY, OIL INLET	1							
12	1	26106-080122	BOLT, M8X 12 PLATED	1							
13	1	26106-080162	BOLT, M8X 16 PLATED	1							
14	1	114250-39450	SWITCH, HYDRAULIC	1							
15	1	129907-39061	PIPE ASSY, OIL	1							
17	2	123907-39500	RETAINER, PIPE	1							
19	1	129005-59830	BOLT ASSY, JOINT M8	2							
20	2	22190-080002	WASHER, SEAL 6	2							
21	2	23857-030000	BOLT, JOINT 3	2							
22	1	22190-080002	WASHER, SEAL 6	2							
23	1	26106-080122	BOLT, M8X 12 PLATED	1							
24	1	22190-080002	WASHER, SEAL 6	2							
25	1	26106-080122	BOLT, M8X 12 PLATED	2							
26	1	171056-49120	PLUG, DRAIN R1/4	1							

Remarks
(1) REPAIR PART.

N:Old $\frac{\text{Yes}}{\text{No}}$ New. Q:Old $\frac{\text{No}}{\text{Yes}}$ New. R:Old $\frac{\text{Yes}}{\text{Yes}}$ New. S:Old $\frac{\text{No}}{\text{No}}$ New. W:Add. Z:Discontinued. F:Interchangeable by set. K:Q'ty Change

Copyright (C) YANMAR GLOBAL CS CO., LTD. All RightsReserved.

Fig.10. COOLING WATER SYSTEM

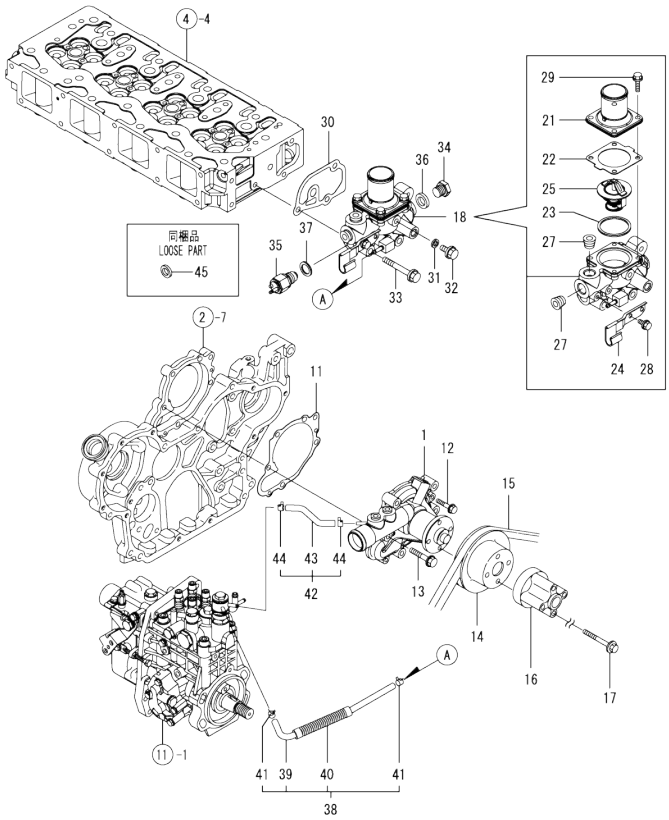

(A)=4TNV94L-PDBWK
(B)=
(C)=
(D)=
(E)=
(F)=

No.	Lev.	Parts No.	Description	Q'ty (A)	(B)	(C)	(D)	(E)	(F)	I	R
1	1	129907-42000	PUMP ASSY, WATER	1							
11	1	129900-42020	GASKET, WATER PUMP	1							
12	1	26106-060302	BOLT, M6X 30 PLATED	2							
13	1	26106-080552	BOLT, M8X 55 PLATED	5							
14	1	129916-42410	V-PULLEY, PUMP	1							
14-1	1	129906-42421	V-PULLEY, PUMP	1						N	
	(A=EG2851)										
15	1	25153-004500	V-BELT, B45	1							
16	1	119117-44760	SPACER, FAN	1							
17	1	26106-080802	BOLT, M8X 80 PLATED	4							
18	1	129946-49810	CASE ASSY,THERMOSTAT	1							
21	2	129916-49530	COVER, THERMOSTAT	1							
22	2	121850-49540	GASKET, THERMOSTAT	1							
23	2	121850-49550	GASKET, THERMOSTAT	1							
24	2	129907-49730	RETAINER, PIPE	1							
25	2	121850-49800	THERMOSTAT, 82C	1							
27	2	23875-030000	PLUG, R03	2							
28	2	26106-060122	BOLT, M6X 12 PLATED	1							
29	2	26106-060202	BOLT, M6X 20 PLATED	4							
30	1	129900-49870	GASKET, THERMOSTAT	1							
31	1	23414-080000	GASKET, 8X1.0	1							
32	1	26106-080122	BOLT, M8X 12 PLATED	1							
33	1	26106-080602	BOLT, M8X 60 PLATED	3							
34	1	121450-42450	PLUG, M16	1							
35	1	121250-44901	SWITCH, THERMO 110	1							
36	1	124465-44950	GASKET, 16	1							
37	1	124465-44950	GASKET, 16	1							
38	1	129907-49610	HOSE ASSY, WATER	1							
39	2	129907-49710	HOSE, WATER	1							
40	2	129907-49750	TUBE, CORRUGATED	1							
41	2	124722-59050	CLAMP, HOSE 9	2							
42	1	129907-49620	HOSE ASSY, WATER	1							
43	2	129907-49720	HOSE, WATER	1							
44	2	124722-59050	CLAMP, HOSE 9	2							
45	1	129150-49360	GASKET	1						Z	
	(A=FROM 1ST)										

N:Old ←Yes/No→ New. Q:Old ←No/Yes→ New. R:Old ←Yes/Yes→ New. S:Old ←No/No→ New. W:Add. Z:Discontinued. F:Interchangeable by set. K:Q'ty Change

Copyright (C) YANMAR GLOBAL CS CO., LTD. All RightsReserved.

Fig.11. FUEL INJECTION PUMP

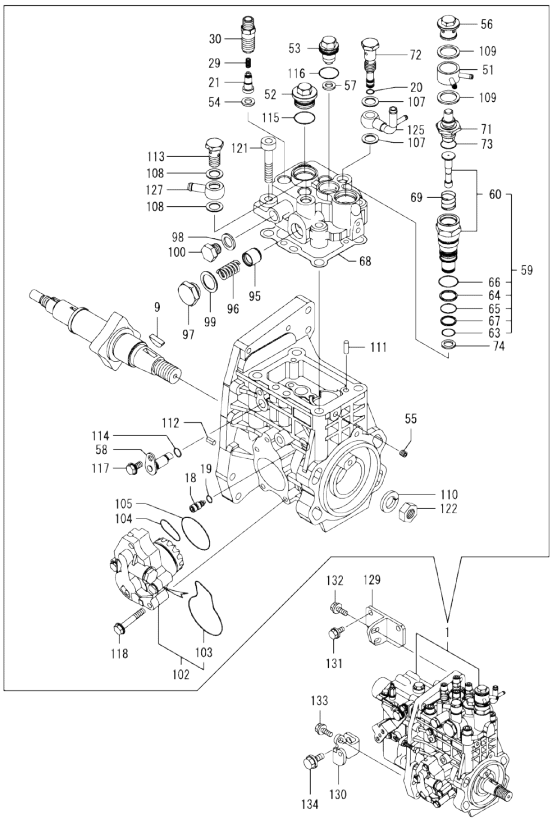

Remarks
(1) GOVERNOR ASSY(FIG.12) IS INCORPORATED IN THIS FUEL INJECTION PUMP.(REF.NO.1).

(A)=4TNV94L-PDBWK (D)=
(B)= (E)=
(C)= (F)=

No.	Lev.	Parts No.	Description	Q'ty (A)	(B)	(C)	(D)	(E)	(F)	I	R
1	1	729906-51312	PUMP ASSY, INJECTION	1							1
9	2	144626-51090	FEATHER KEY, 5X19	1							
18	2	158600-51270	STOPPER, TAPPET	1							
19	2	158563-51281	O-RING, 4D S6	1							
20	2	158563-51281	O-RING, 4D S6	1							
21	2	158560-51300	VALVE ASSY, DELIVERY	4							
29	2	158563-51330	SPRING, DELIVERY	4							
30	2	129907-51340	HOLDER, DELIVERY	4							
51	2	158553-51551	JOINT, COOLING WATER	1							
52	2	158601-51550	PLUG, M22	1							
53	2	129907-51560	PLUG, M16	1							
54	2	158552-51570	GASKET, PLUG	4							
55	2	158557-51570	PLUG, RACK	1							
56	2	158601-51570	PLUG	1							
57	2	129906-51580	GASKET, PLUG	1							
58	2	158552-51580	LIFTER, LINK	1							
59	2	119802-51590	TIMER ASSY	1							
60	3	119802-51600	TIMER ASSY	1							
63	3	158553-51670	O-RING	1							
64	3	119802-51680	RING, BACKUP	1							
65	3	119802-51690	O-RING	1							
66	3	24356-010200	O-RING, 4D1020	1							
67	3	24372-000150	RING, BACK UP T2P15	1							
68	2	158560-51600	GASKET	1							
69	2	158553-51630	SPRING, TIMER	1							
71	2	158553-51640	THERMOELEMENT	1							
72	2	158601-51650	JOINT, OVER FLOW	1							
73	2	158553-51660	O-RING, P14	1							
74	2	158553-51680	GASKET, TIMER	1							
95	3	158601-51770	PISTON, ACCUMLATOR	1							
96	3	158552-51781	SPRING, ACCUMULATOR	1							
97	3	158601-51790	PLUG	1							
98	3	22190-120002	WASHER, SEAL 12	1							
99	3	22190-180002	WASHER, SEAL 18	1							
100	3	23887-120002	PLUG, 12	1							
102	2	158552-52100	PUMP ASSY, FUEL FEED	1							
103	3	158552-52500	O-RING	1							
104	2	158552-52310	O-RING	1							
105	2	158552-52400	O-RING, 4E S42	1							
107	2	22190-120002	WASHER, SEAL 12	2							
108	2	22190-120002	WASHER, SEAL 12	2							
109	2	22190-180002	WASHER, SEAL 18	2							
110	2	22217-180000	WASHER, SPRING 18	1							
111	2	22312-050140	PIN, PARALLEL M5X14	2							
112	2	22351-050010	PIN, SPRING 5.0X10	2							
113	2	23857-060000	BOLT, JOINT 6	1							
114	2	24311-000070	O-RING, 1AP7.0	1							
115	2	24356-010200	O-RING, 4D1020	1							
116	2	24356-020210	O-RING, 4D2021	1							
117	2	26106-060102	BOLT, M6X 10 PLATED	1							
118	2	26106-060352	BOLT, M6X 35 PLATED	4							

N:Old ←Yes/No→ New. Q:Old ←No/Yes→ New. R:Old ←Yes/Yes→ New. S:Old ←No/No→ New. W:Add. Z:Discontinued. F:Interchangeable by set. K:Q'ty Change

++ CONTINUE ++

Copyright (C) YANMAR GLOBAL CS CO., LTD. All RightsReserved.

Fig.11. FUEL INJECTION PUMP

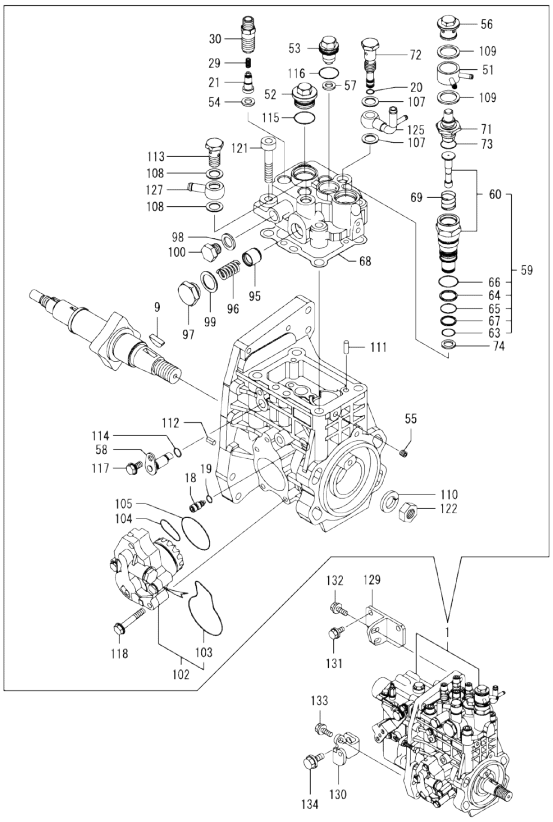

Remarks
(1) GOVERNOR ASSY(FIG.12) IS INCORPORATED IN THIS FUEL INJECTION PUMP.(REF.NO.1).

(A)=4TNV94L-PDBWK (D)=
(B)= (E)=
(C)= (F)=

No.	Lev.	Parts No.	Description	Q'ty (A)	(B)	(C)	(D)	(E)	(F)	I	R
121	2	26450-100452	BOLT, M10X 45	4							
122	2	26776-180002	NUT, LOCK M18	1							
125	2	158552-51670	JOINT, OVER FLOW	1							
127	2	129916-59020	JOINT, PIPE 12	1							
129	1	129907-01950	RETAINER, PUMP	1							
130	1	129907-01960	RETAINER, PUMP	1							
131	1	26106-080162	BOLT, M8X 16 PLATED	2							
132	1	26106-080222	BOLT, M8X 22 PLATED	2							
133	1	26106-080222	BOLT, M8X 22 PLATED	1							
134	1	26106-100202	BOLT, M10X 20 PLATED	1							

N:Old ←Yes/No→ New. Q:Old ←No/Yes→ New. R:Old ←Yes/Yes→ New. S:Old ←No/No→ New. W:Add. Z:Discontinued. F:Interchangeable by set. K:Q'ty Change

Copyright (C) YANMAR GLOBAL CS CO., LTD. All RightsReserved.

Fig.12. GOVERNOR

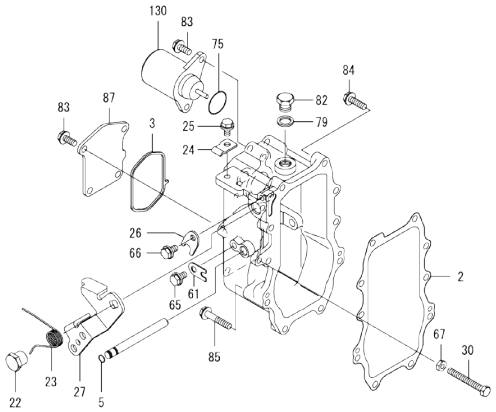

Remarks
* THIS FIGURE(GOVERNOR ASSY)IS INCORPORATED IN THE FUEL INJECTION PUMP ASSY(FIG.11).

(A)=4TNV94L-PDBWK (D)=
(B)= (E)=
(C)= (F)=

No.	Lev.	Parts No.	Description	Q'ty (A)	(B)	(C)	(D)	(E)	(F)	I	R
2	2	158560-61050	GASKET	1							
3	2	158560-61071	GASKET	1							
5	2	129155-51280	O-RING, S6	1							
22	2	129255-61410	NUT, M8	1							
23	2	123944-61420	SPRING, LEVER	1							
24	2	123944-61430	RETAINER	1							
25	2	26106-060102	BOLT, M6X 10 PLATED	1							
26	2	158560-61430	STOPPER, SHAFT	1							
27	2	158560-61442	LEVER, REGULATOR	1							
30	2	129155-61460	BOLT, LIMITING	1							
61	2	119660-61901	STOPPER, SHAFT	1							
65	2	26106-060102	BOLT, M6X 10 PLATED	1							
66	2	26106-060102	BOLT, M6X 10 PLATED	1							
67	2	26756-060002	NUT, LOCK M6	1							
75	2	158552-61900	O-RING	1							
79	2	22190-160002	WASHER, SEAL 16	1							
82	2	23887-160002	PLUG, 16	1							
83	2	26106-060142	BOLT, M6X 14 PLATED	6							
84	2	26106-060252	BOLT, M6X 25 PLATED	8							
85	2	26106-060402	BOLT, M6X 40 PLATED	2							
87	2	158560-61061	COVER, GOVERNOR CASE	1							
130	2	119233-77932	SOLENOID, STOP	1							

N:Old ←Yes/No→ New. Q:Old ←No/Yes→ New. R:Old ←Yes/Yes→ New. S:Old ←No/No→ New. W:Add. Z:Discontinued. F:Interchangeable by set. K:Q'ty Change

Copyright (C) YANMAR GLOBAL CS CO., LTD. All RightsReserved.

Fig.13. FUEL INJECTION VALVE

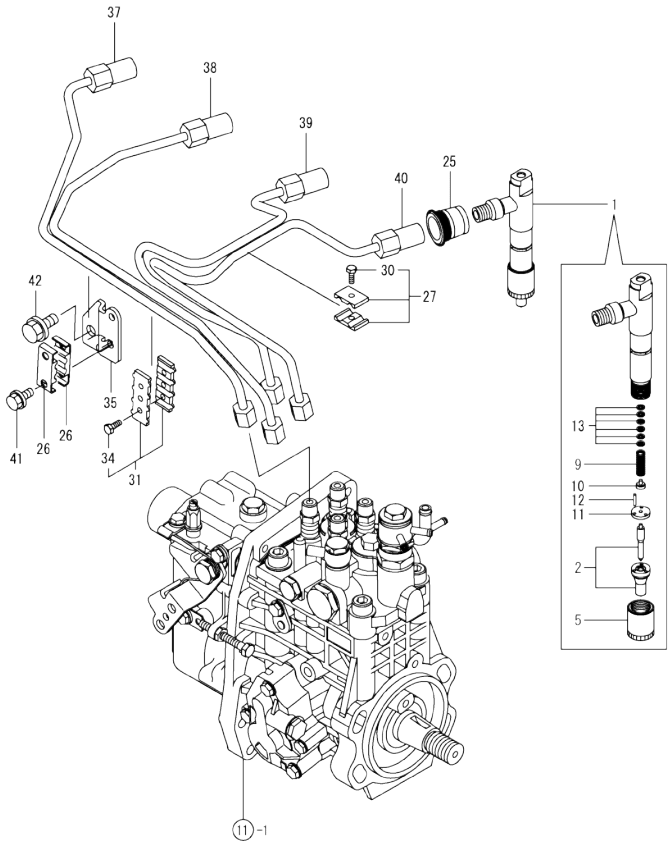

(A)=4TNV94L-PDBWK (D)=
(B)= (E)=
(C)= (F)=

No.	Lev.	Parts No.	Description	Q'ty (A)	(B)	(C)	(D)	(E)	(F)	I	R
1	1	729906-53100	FUEL INJECTOR ASSY	4							
2	2	129906-53000	NOZZLE ASSY, F.I.	4							
5	2	114250-53080	NUT, NOZZLE	4							
9	2	114250-53120	SPRING, NOZZLE	4							
10	2	114250-53130	SEAT, SPRING	4							
11	2	114250-53140	SPACER	4							
12	2	114250-53210	PIN	8							
13	2	114250-53400	SHIM SET	4							
25	1	123907-11601	SEAL, PIPE	4							
26	1	122780-59100	RETAINER	2							
27	1	119305-59120	RETAINER, PIPE	1							
30	2	129150-59131	BOLT, M4X14	1							
31	1	129550-59120	RETAINER, PIPE	1							
34	2	129150-59131	BOLT, M4X14	2							
35	1	129907-59710	SUPPORT	1							
37	1	129907-59810	PIPE ASSY, INJECTION	1							
38	1	129907-59820	PIPE ASSY, INJECTION	1							
39	1	129907-59830	PIPE ASSY, INJECTION	1							
40	1	129907-59840	PIPE ASSY, INJECTION	1							
41	1	26106-060162	BOLT, M6X 16 PLATED	2							
42	1	26106-080182	BOLT, M8X 18 PLATED	1							

N:Old ←Yes/No→ New. Q:Old ←No/Yes→ New. R:Old ←Yes/Yes→ New. S:Old ←No/No→ New. W:Add. Z:Discontinued. F:Interchangeable by set. K:Q'ty Change

Copyright (C) YANMAR GLOBAL CS CO., LTD. All RightsReserved.

Fig.14. FUEL PIPE

(A)=4TNV94L-PDBWK (D)=
(B)= (E)=
(C)= (F)=

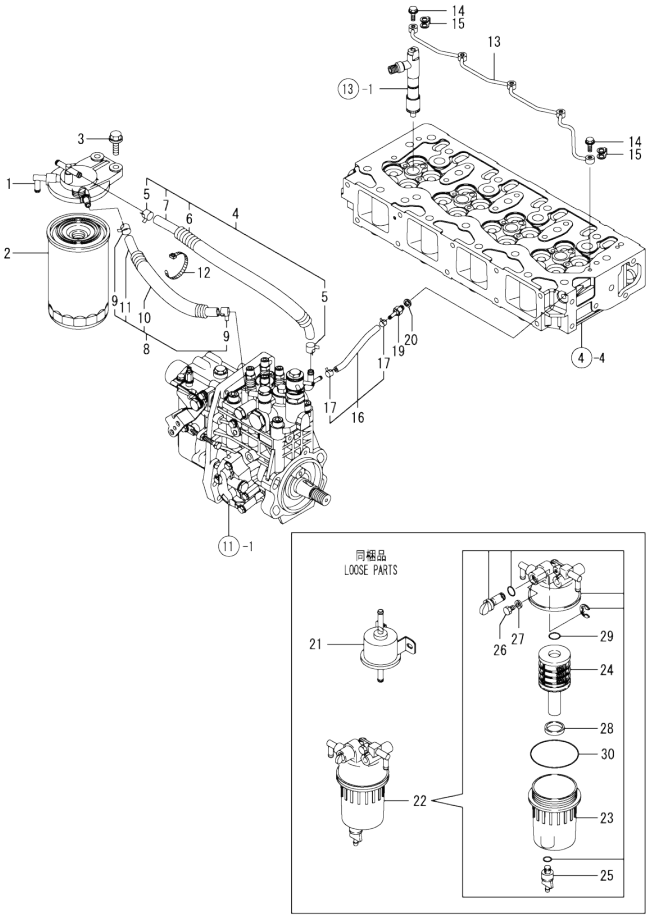

No.	Lev.	Parts No.	Description	Q'ty (A)	(B)	(C)	(D)	(E)	(F)	I	R
1	1	129004-55612	BRACKET, FILTER	1							
2	1	129907-55801	FILTER, FUEL	1							
3	1	26106-080302	BOLT, M8X 30 PLATED	2							
4	1	129457-59010	HOSE ASSY, FUEL	1							
5	2	124766-59050	CLAMP, HOSE 11.5	2							
6	2	129957-59120	TUBE, CORRUGATED 15	1							
7	2	105025-59750	HOSE, FUEL	1							
8	1	129981-59010	HOSE ASSY, FUEL	1							
9	2	124766-59050	CLAMP, HOSE 11.5	2							
10	2	129950-59221	TUBE, CORRUGATED 15	1							
11	2	129980-59510	HOSE, FUEL	1							
12	1	121750-59890	BAND, NYLON	1							
13	1	129907-59140	PIPE ASSY, RETURN	1							
14	1	123907-59540	BOLT, PIPE JOINT M6	5							
15	1	123907-59550	GASKET	5							
16	1	129486-59551	HOSE ASSY, RETURN	1							
17	2	124722-59050	CLAMP, HOSE 9	2							
19	1	123907-59560	JOINT, HOSE	1							
20	1	22190-080002	WASHER, SEAL 6	1							
21	1	129612-52100	PUMP, FUEL FEED	1							
22	1	129245-55710	SEPARATOR ASSY,WATER	1							
23	2	129245-55720	CUP ASSY, SEPARATOR	1							
24	2	129242-55730	ELEMENT, FUEL	1							
25	2	129242-55740	PLUG, DRAIN	1							
26	2	129242-55750	VALVE, AIR VENT	1							
27	2	129242-55760	GASKET, PLUG	1							
28	2	129242-55770	FLOAT	1							
29	2	24311-000160	O-RING, 1AP16.0	1							
30	2	24321-000750	O-RING, 1AG75.0	1							

N:Old ←Yes/No→ New. Q:Old ←No/Yes→ New. R:Old ←Yes/Yes→ New. S:Old ←No/No→ New. W:Add. Z:Discontinued. F:Interchangeable by set. K:Q'ty Change

Copyright (C) YANMAR GLOBAL CS CO., LTD. All RightsReserved.

Fig.15. STARTER MOTOR

(A)=4TNV94L-PDBWK
(B)=
(C)=
(D)=
(E)=
(F)=

No.	Lev.	Parts No.	Description	Q'ty (A)	(B)	(C)	(D)	(E)	(F)	I	R
1	1	129940-77010	STARTER ASSY	1							
2	2	129940-77100	ARMATURE ASSY	1							
5	2	129940-77130	COIL ASSY, FIELD	1							
6	3	129940-77140	SCREW, CORE SET	4							
7	3	129940-77150	O-RING	1							
8	3	129940-77160	BRUSH	2							
9	2	129940-77170	COVER	1							
10	2	129940-77180	HOLDER ASSY, BRUSH	1							
11	3	129940-77190	SPRING, BRUSH	1							
12	3	129940-77200	BRUSH	2							
13	2	129940-77210	SWITCH ASSY, MAGNET	1							
14	2	129940-77220	CASE, GEAR	1							
15	2	129940-77230	RETAINER, BEARING	1							
16	2	129940-77240	LEVER SET	1							
17	2	129940-77250	COVER KIT, DUST	1							
18	2	129940-77260	BOLT, THROUGH	2							
19	2	129940-77270	BOLT	4							
20	2	129940-77280	SCREW	2							
21	2	123900-77510	PINION ASSY	1							
22	3	123900-77520	CLUTCH ASSY	1							
23	4	X2240610100	BEARING, BALL	2							
24	3	123900-77540	SHAFT, PINION	1							
25	3	119131-77550	STOPPER SET, PINION	1							
29	2	121254-77810	COVER, TERMINAL	1							
30	2	114371-79070	BOLT	2							
31	1	26116-120252	BOLT, M12X 25 PLATED	2							

N:Old ←Yes/No→ New. Q:Old ←No/Yes→ New. R:Old ←Yes/Yes→ New. S:Old ←No/No→ New. W:Add. Z:Discontinued. F:Interchangeable by set. K:Q'ty Change

Copyright (C) YANMAR GLOBAL CS CO., LTD. All RightsReserved.

Fig.16. GENERATOR

(A)=4TNV94L-PDBWK (D)=
(B)= (E)=
(C)= (F)=

No.	Lev.	Parts No.	Description	Q'ty (A)	(B)	(C)	(D)	(E)	(F)	I	R
1	1	123900-77210	ALTERNATOR, 12V-60A	1							
1-1	1	129908-77210	ALTERNATOR	1						F	1
	(A=ED4332)										
2	2	123900-77700	ROTOR ASSY	1						Z	
	(A=ED4332)										
3	2	129612-77710	BEARING, BALL	1						Z	
	(A=ED4332)										
4	2	123900-77720	BRACKET ASSY	1						Z	
	(A=ED4332)										
5	2	123900-77730	BRACKET ASSY	1						Z	
	(A=ED4332)										
6	2	123900-77740	PULLEY, GENERATOR	1						Z	
	(A=ED4332)										
7	2	123900-77750	SCREW KIT	1						Z	
	(A=ED4332)										
8	1	129470-77340	PIECE, DISTANCE	1							
8-1	1	129908-77360	PIECE, DISTANCE	1						F	1
	(A=ED4332)										
9	1	26116-101202	BOLT, M10X120 PLATED	1							
9-1	1	129908-77220	BOLT, STOPPER M10	1						F	1
	(A=ED4332)										
10	1	26306-100002	NUT, M10	1							
11	1	129916-77300	ADJUSTER, BELT	1							
12	1	119810-77340	BOLT, ADJUST L=30	1							
13	1	26014-080252	BOLT, M8X 25	1							
14	1	129211-77920	TIMER	1							
15	1	129908-77940	HARNESS	1						F	1
	(A=ED4332)										

Remarks
(1)Interchangeable by simultaneous replacement with No.1-1, 8-1, 9-1, 15.

N:Old $\frac{\text{Yes}}{\text{No}}$ New. Q:Old $\frac{\text{No}}{\text{Yes}}$ New. R:Old $\frac{\text{Yes}}{\text{Yes}}$ New. S:Old $\frac{\text{No}}{\text{No}}$ New. W:Add. Z:Discontinued. F:Interchangeable by set. K:Q'ty Change

Copyright (C) YANMAR GLOBAL CS CO., LTD. All RightsReserved.

Fig.17. GASKET SET

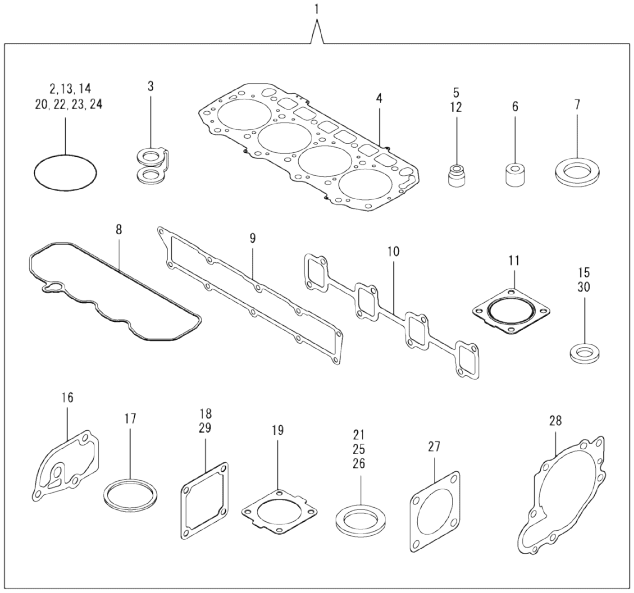

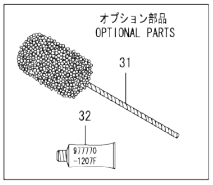

(A)=4TNV94L-PDBWK (D)=
(B)= (E)=
(C)= (F)=

No.	Lev.	Parts No.	Description	Q'ty (A)	(B)	(C)	(D)	(E)	(F)	I	R
1	1	729906-92820	GASKET SET	1							1
1-1	1	129906-92740	GASKET SET	1						N	1
	(A=*2009.12)										
2	2	24351-030750	O-RING, 1A3075	1							
3	2	123907-59550	GASKET	5							
4	2	129906-01340	GASKET, HEAD	1							
4-1	2	129906-01350	GASKET, HEAD	1						N	
	(A=*2009.12)										
5	2	124160-11340	SEAL, VALVE STEM	8							
6	2	119802-11870	PROTECTOR, NOZZLE	4							
7	2	119625-11880	SEAT, NOZZLE	4							
8	2	129907-11310	GASKET, BONNET	1							
9	2	129907-12110	GASKET, MANIFOLD	1							
10	2	129900-13251	GASKET, EXH.MANIFOLD	1							
11	2	129930-13201	GASKET, SILENCER	2							
12	2	119803-11340	SEAL, VALVE STEM	8							
13	2	129900-32030	O-RING, P20	2							
14	2	129900-32040	O-RING, P14	1							
15	2	124465-44950	GASKET, 16	2							
16	2	129900-49870	GASKET, THERMOSTAT	1							
17	2	121850-49550	GASKET, THERMOSTAT	1							
18	2	121850-77021	GASKET, AIR HEATER	1							
19	2	121850-49540	GASKET, THERMOSTAT	1							
20	2	24341-000530	O-RING, 1AS53.0	1							
21	2	22190-220002	WASHER, SEAL 22	1							
22	2	24311-000070	O-RING, 1AP7.0	1							
23	2	24311-000120	O-RING, 1AP12.0	8							
24	2	24311-000320	O-RING, 1AP32.0	3							
25	2	22190-080002	WASHER, SEAL 6	7							
26	2	23414-080000	GASKET, 8X1.0	1							
27	2	124240-01883	GASKET	1							
28	2	129900-42020	GASKET, WATER PUMP	1							
29	2	119129-77020	GASKET	1							
30	2	129150-49360	GASKET	1						Z	
	(A=FROM 1ST)										
31	1	129400-92440	HONE, FLEX	1							1
32	1	977770-1207F	GASKET.LIQUID	1							1

Remarks
(1) OPTIONAL PART.

N:Old ◄Yes/No► New. Q:Old ◄No/Yes► New. R:Old ◄Yes/Yes► New. S:Old ◄No/No► New. W:Add. Z:Discontinued. F:Interchangeable by set. K:Q'ty Change

Copyright (C) YANMAR GLOBAL CS CO., LTD. All RightsReserved.

Parts No. Index

Parts No.	Fig. No.	Ref. No.
105025-59750	14	7
114250-39450	9	14
114250-53080	13	5
114250-53120	13	9
114250-53130	13	10
114250-53140	13	11
114250-53210	13	12
114250-53400	13	13
114371-79070	15	30
119000-35140	9	3
119005-35151	9	5
119005-77050	5	7
119117-44760	10	16
119129-77020	5	5
	17	29
119129-77520	5	8
119131-18320	6	5
119131-77550	15	25
119233-77932	12	130
119305-59120	13	27
119593-11301	4	30
119620-01750	3	3
119620-11180	4	14
119625-11880	4	26
	17	7
119640-01640	3	8
119640-61400	4	61
119660-61901	12	61
119802-11870	4	25
	17	6
119802-51590	11	59
119802-51600	11	60
119802-51680	11	64
119802-51690	11	65
119803-11340	4	15
	17	12
119810-77340	16	12
120130-22301	8	21
121250-44901	10	35
121254-77810	15	29
121450-42450	10	34
121520-34810	9	1
121750-59890	14	12
121850-21130	8	11
121850-21290	8	4
121850-21920	8	5
121850-49540	10	22
	17	19
121850-49550	10	23
	17	17

Parts No.	Fig. No.	Ref. No.
121850-49800	10	25
121850-77021	5	6
	17	18
122780-59100	13	26
123900-13610	6	3
123900-13630	6	4
123900-25060	7	9
123900-77210	16	1
123900-77510	15	21
123900-77520	15	22
123900-77540	15	24
123900-77700	16	2
123900-77720	16	4
123900-77730	16	5
123900-77740	16	6
123900-77750	16	7
123907-03100	4	55
123907-03110	4	56
123907-03120	4	57
123907-03140	4	58
123907-11280	4	35
123907-11550	4	3
123907-11601	13	25
123907-11820	4	21
123907-11830	4	20
123907-39500	9	17
123907-59540	14	14
123907-59550	14	15
	17	3
123907-59560	14	19
123944-61420	12	23
123944-61430	12	24
124160-01751	2	23
	4	50
124160-11340	4	16
	17	5
124160-11360	4	64
124240-01871	2	25
124240-01883	2	26
	17	27
124465-44950	10	36
		37
	17	15
124722-59050	10	41
		44
	14	17
124766-59050	14	5
		9
129001-91810	2	12
		13

Parts No.	Fig. No.	Ref. No.
129004-55612	14	1
129005-59830	9	19
129100-01580	2	4
	3	1
129150-02450	7	4
129150-11230	4	38
		42
129150-11750	4	19
		39
		43
129150-14200	7	1
129150-25920	7	13
129150-49360	10	45
	17	30
129150-59131	13	30
		34
129155-51280	12	5
129155-61460	12	30
129211-77920	16	14
129242-55730	14	24
129242-55740	14	25
129242-55750	14	26
129242-55760	14	27
129242-55770	14	28
129245-55710	14	22
129245-55720	14	23
129255-61410	12	22
129400-92440	17	31
129457-59010	14	4
129470-77340	16	8
129486-59551	14	16
129550-59120	13	31
129612-52100	14	21
129612-77710	16	3
129900-01200	1	27
129900-01250	1	4
129900-01850	2	28
129900-01870	2	29
129900-02020	1	6
129900-02341	1	33
129900-02410	1	9
129900-02931	1	24
129900-02941	1	36
129900-07900	4	1
129900-13200	6	1
129900-13251	6	2
	17	10
129900-14100	7	6
129900-21200	8	3
129900-21600	8	14

Parts No.	Fig. No.	Ref. No.
129900-23001	8	23
129900-23200	8	26
129900-23601	8	27
129900-23610	8	30
129900-23911	8	29
129900-25100	7	10
129900-32001	2	8
129900-32030	2	10
	9	6
	17	13
129900-32040	2	11
	17	14
129900-42020	10	11
	17	28
129900-49870	10	30
	17	16
129902-21000	8	1
129906-01340	1	28
	17	4
129906-01350	1	28 -2
	17	4 -1
129906-22050	8	17
129906-22080	8	15
129906-22090	8	15 -1
129906-22900	8	32 -1
129906-22910	8	32 -2
129906-34851	9	2
129906-42421	10	14 -1
129906-51580	11	57
129906-53000	13	2
129906-92740	17	1 -1
129907-01190	1	29
129907-01331	1	28 -1
129907-01500	2	7
129907-01950	11	129
129907-01960	11	130
129907-03011	4	52
129907-03061	4	53
129907-03070	4	54
129907-11100	4	11
129907-11110	4	12
129907-11120	4	13
129907-11250	4	32
129907-11260	4	33
129907-11270	4	34
129907-11310	4	60
	17	8
129907-11321	4	51
129907-11341	4	31
129907-11510	4	17

Parts No. Index

Parts No.	Fig. No.	Ref. No.
129907-11650	4	36
129907-11660	4	40
129907-11700	4	4
129907-11800	4	24
129907-11910	4	27
129907-11920	4	44
129907-11950	4	28
129907-12100	5	1
129907-12110	5	2
	17	9
129907-14400	7	2
129907-14581	7	3
129907-25900	7	16
129907-39061	9	15
129907-42000	10	1
129907-49610	10	38
129907-49620	10	42
129907-49710	10	39
129907-49720	10	43
129907-49730	10	24
129907-49750	10	40
129907-51340	11	30
129907-51560	11	53
129907-55801	14	2
129907-59140	14	13
129907-59710	13	35
129907-59810	13	37
129907-59820	13	38
129907-59830	13	39
129907-59840	13	40
129908-14581	7	3 -1
129908-77210	16	1 -1
129908-77220	16	9 -1
129908-77360	16	8 -1
129908-77940	16	15
129916-01710	3	7
129916-01790	3	6
129916-01800	2	3
129916-21590	8	12
129916-21610	8	7
129916-21620	8	8
129916-22950	8	34 -1
129916-42410	10	14
129916-49530	10	21
129916-59020	11	127
129916-77300	16	11
129927-42140	2	11 A
129930-13201	6	7
	17	11
129940-77010	15	1

Parts No.	Fig. No.	Ref. No.
129940-77100	15	2
129940-77130	15	5
129940-77140	15	6
129940-77150	15	7
129940-77160	15	8
129940-77170	15	9
129940-77180	15	10
129940-77190	15	11
129940-77200	15	12
129940-77210	15	13
129940-77220	15	14
129940-77230	15	15
129940-77240	15	16
129940-77250	15	17
129940-77260	15	18
129940-77270	15	19
129940-77280	15	20
129946-49810	10	18
129950-59221	14	10
129951-01740	2	5
129953-25300	7	15
129953-35000	9	7
129957-59120	14	6
129960-21640	8	9
129980-59510	14	11
129981-01600	3	2
129981-59010	14	8
144626-51090	11	9
158552-51570	11	54
158552-51580	11	58
158552-51670	11	125
158552-51781	11	96
158552-52100	11	102
158552-52310	11	104
158552-52400	11	105
158552-52500	11	103
158552-61900	12	75
158553-51551	11	51
158553-51630	11	69
158553-51640	11	71
158553-51660	11	73
158553-51670	11	63
158553-51680	11	74
158557-51570	11	55
158560-51300	11	21
158560-51600	11	68
158560-61050	12	2
158560-61061	12	87
158560-61071	12	3
158560-61430	12	26

Parts No.	Fig. No.	Ref. No.
158560-61442	12	27
158563-51150	7	17
158563-51281	11	19
		20
158563-51330	11	29
158600-51270	11	18
158601-51550	11	52
158601-51570	11	56
158601-51650	11	72
158601-51770	11	95
158601-51790	11	97
171031-11741	2	31
171051-01921	1	5
171056-49120	9	26
22190-080002	9	20
		22
		24
	14	20
	17	25
22190-120002	11	98
		107
		108
22190-160002	12	79
22190-180002	11	99
		109
22190-220002	3	10
	17	21
22217-180000	7	18
	11	110
22252-000300	8	22
22312-050140	11	111
22351-050010	11	112
22351-060012	1	10
22512-070140	7	7
	8	6
22857-500100	4	62
		63
23414-080000	10	31
	17	26
23857-030000	9	21
23857-060000	11	113
23875-030000	10	27
23876-020000	4	8
23876-030000	1	11
		12
		13
	4	9
23887-120002	11	100
23887-160002	12	82
24311-000070	2	14

Parts No.	Fig. No.	Ref. No.
24311-000070	11	114
	17	22
24311-000120	4	29
		65
	17	23
24311-000160	14	29
24311-000320	2	24
		32
	4	66
	17	24
24321-000750	14	30
24341-000530	8	10
	17	20
24351-030750	2	15
	17	2
24356-010200	11	66
		115
24356-020210	11	116
24372-000150	11	67
25153-004500	10	15
26014-080252	16	13
26106-060102	11	117
	12	25
		65
		66
26106-060122	10	28
26106-060142	12	83
26106-060162	13	41
26106-060202	10	29
26106-060252	12	84
26106-060302	10	12
26106-060352	11	118
26106-060402	12	85
26106-080122	3	11
	9	12
		23
		25
	10	32
26106-080162	2	16
		17
		27
		30
	4	2
	7	8
	9	13
	11	131
26106-080182	13	42
26106-080202	2	18
26106-080222	11	132
		133

Parts No. Index

Parts No.	Fig. No.	Ref. No.
26106-080302	14	3
26106-080402	2	19
		20
	4	46
	5	9
26106-080452	2	21
26106-080552	5	3
	7	14
	10	13
26106-080602	4	47
		48
	10	33
26106-080802	10	17
26106-080852	5	4
26106-080902	5	10
26106-100202	11	134
26116-101202	16	9
26116-120252	15	31
26206-100352	3	4
26206-100702	3	5
26216-100302	2	9
26226-080222	4	45
26306-080002	4	49
	6	6
26306-100002	2	22
	16	10
26450-100452	11	121
26756-060002	12	67
26776-180002	7	19
	11	122
27241-300000	1	14
27241-400000	4	10
27310-070001	4	22
729900-02801	1	30
729906-01561	1	1
729906-22900	8	32
729906-22950	8	34
729906-51312	11	1
729906-53100	13	1
729906-92820	17	1
729907-01559	2	1
977770-1207F	17	32
X2240610100	15	23

Parts No.	Fig. No.	Ref. No.

Parts No.	Fig. No.	Ref. No.

Parts No.	Fig. No.	Ref. No.