YANMAR

PARTS CATALOG

0CD10-M93000EN

Last update Apr., 2013

PREFACE

1. This parts catalog is the 1st edition of 4TNV94L-PIKA2 for KATO WORKS CO.,LTD.

Pub.No. : 000Y00D9300

Published : December.2006

2. Model name

Engine model	Vehicle		Vehicle made by
	Products	Model name	
4TNV94L-PIKA2	Excavator	55N	KATO WORKS CO.,LTD.

Contents

0CD10-M93000

Fig. No.	Fig. Name	Fig. No.	Fig. Name
4TNV94L-PIKA2			
1.	CYLINDER BLOCK		
2.	GEAR HOUSING		
3.	FLYWHEEL HOUSING & OIL SUMP		
4.	CYLINDER HEAD & BONNET		
5.	SUCTION MANIFOLD & AIR CLEANER		
6.	EXHAUST MANIFOLD & SILENCER		
7.	CAMSHAFT & DRIVING GEAR		
8.	CRANKSHAFT & PISTON		
9.	LUB. OIL SYSTEM		
10.	COOLING WATER SYSTEM		
11.	FUEL INJECTION PUMP		
12.	GOVERNOR		
13.	FUEL INJECTION VALVE		
14.	FUEL LINE		
15.	STARTING MOTOR		
16.	GENERATOR		
17.	GASKET SET		

Fig.1. CYLINDER BLOCK

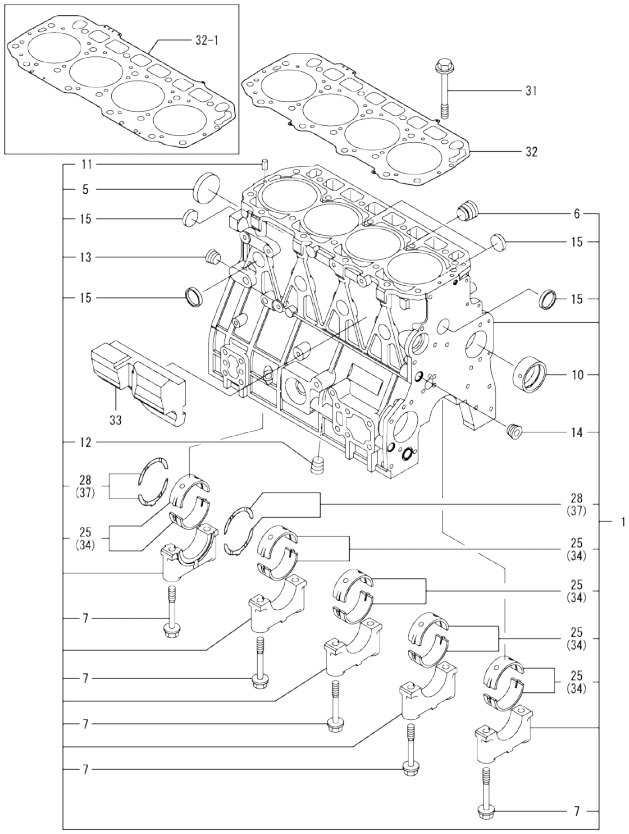

Remarks
(1) UNDER-SIZE(U.S=0.25)PART.
(2) OVER-SIZE(O.S=0.25)PART.
(3) REPAIR PART.

(A)=4TNV94L-PIKA2 (D)=
(B)= (E)=
(C)= (F)=

No.	Lev.	Parts No.	Description	Q'ty (A)	(B)	(C)	(D)	(E)	(F)	I	R
1	1	729906-01560	BLOCK ASSY, CYLINDER	1							
5	2	129900-01250	PLUG, 55	1							
6	2	171051-01921	PLUG, NPTF1	1							
7	2	129900-02020	BOLT, METAL CAP	10							
10	2	129900-02410	BUSH, CAMSHAFT	1							
11	2	22351-060012	PIN, SPRING 6.0X12	2							
12	2	23876-030000	PLUG, R03	1							
13	2	23876-030000	PLUG, R03	1							
14	2	23876-030000	PLUG, R03	1							
15	2	27241-300000	PLUG 30	8							
25	2	729900-02801	BEARING, MAIN	5							3
28	2	129900-02931	BEARING, THRUST	2							
31	1	129900-01200	BOLT, HEAD	18							
32	1	129906-01340	GASKET, HEAD	1							
32-1	1	129906-01350	GASKET, HEAD	1						S	
	(A=*2009.12)										
33	1	129907-01190	SPACER	1							
34	1	129900-02341	BEARING, 0.25 US	5							1
37	1	129900-02941	BEARING, THRUST 0.25	2							2

N:Old ←Yes/No→ New. Q:Old ←No/Yes→ New. R:Old ←Yes/Yes→ New. S:Old ←No/No→ New. W:Add. Z:Discontinued. F:Interchangeable by set. K:Q'ty Change

Copyright (C) YANMAR GLOBAL CS CO., LTD. All RightsReserved.

Fig.2. GEAR HOUSING

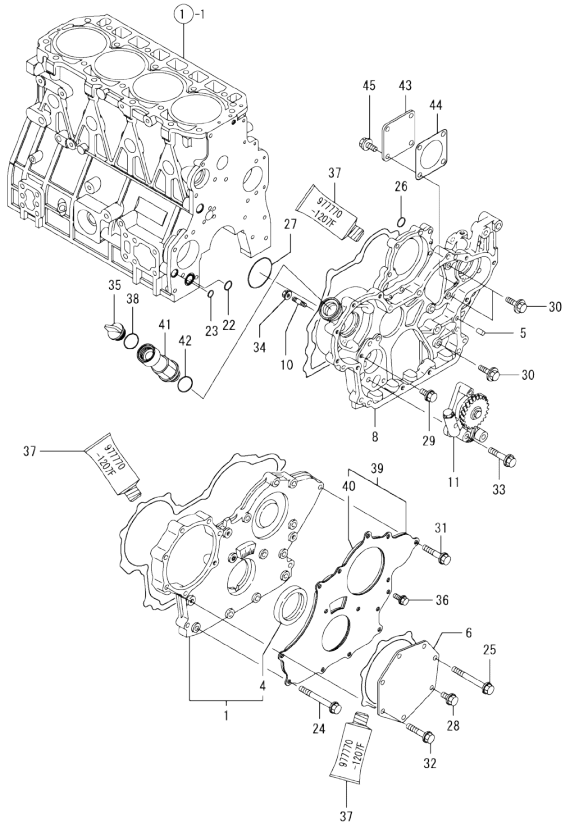

(A)=4TNV94L-PIKA2
(B)=
(C)=
(D)=
(E)=
(F)=

No.	Lev.	Parts No.	Description	Q'ty (A)	(B)	(C)	(D)	(E)	(F)	I	R
1	1	729907-01550	COVER ASSY,GEAR CASE	1							
4	1	129900-01780	SEAL, OIL	1							
5	1	129100-01580	PIN, M8X16	4							
6	1	129900-01740	COVER	1							
8	1	129907-01500	CASE, GEAR	1							
10	1	26216-100302	STUD, M10X 30	4							
11	1	129900-32001	PUMP ASSY, OIL	1							
22	1	129900-32030	O-RING, P20	1							
23	1	129900-32040	O-RING, P14	1							
24	1	129001-91810	BOLT, M8X70	6							
25	1	129001-91810	BOLT, M8X70	1							
26	1	24311-000070	O-RING, 1AP7.0	1							
27	1	24351-030750	O-RING, 1A3075	1							
28	1	26106-080162	BOLT, M8X 16 PLATED	1							
29	1	26106-080162	BOLT, M8X 16 PLATED	1							
30	1	26106-080202	BOLT, M8X 20 PLATED	3							
31	1	26106-080402	BOLT, M8X 40 PLATED	5							
32	1	26106-080402	BOLT, M8X 40 PLATED	5							
33	1	26106-080452	BOLT, M8X 45 PLATED	3							
34	1	26306-100002	NUT, M10	4							
35	1	124160-01751	COVER, FILLER	1							
36	1	26106-080162	BOLT, M8X 16 PLATED	3							
37	1	977770-1207F	GASKET.LIQUID	1							1
38	1	24311-000320	O-RING, 1AP32.0	1							
39	1	129900-01850	COVER ASSY,GEAR CASE	1							
40	2	129900-01870	SPONGE	1							
41	1	171031-11741	PIPE	1							
42	1	24311-000320	O-RING, 1AP32.0	1							
43	1	124240-01871	COVER	1							
44	1	124240-01883	GASKET	1							
45	1	26106-080162	BOLT, M8X 16 PLATED	4							

Remarks
(1) OPTIONAL PART.

N:Old ←Yes/No→ New. Q:Old ←No/Yes→ New. R:Old ←Yes/Yes→ New. S:Old ←No/No→ New. W:Add. Z:Discontinued. F:Interchangeable by set. K:Q'ty Change

Copyright (C) YANMAR GLOBAL CS CO., LTD. All RightsReserved.

Fig.3. FLYWHEEL HOUSING & OIL SUMP

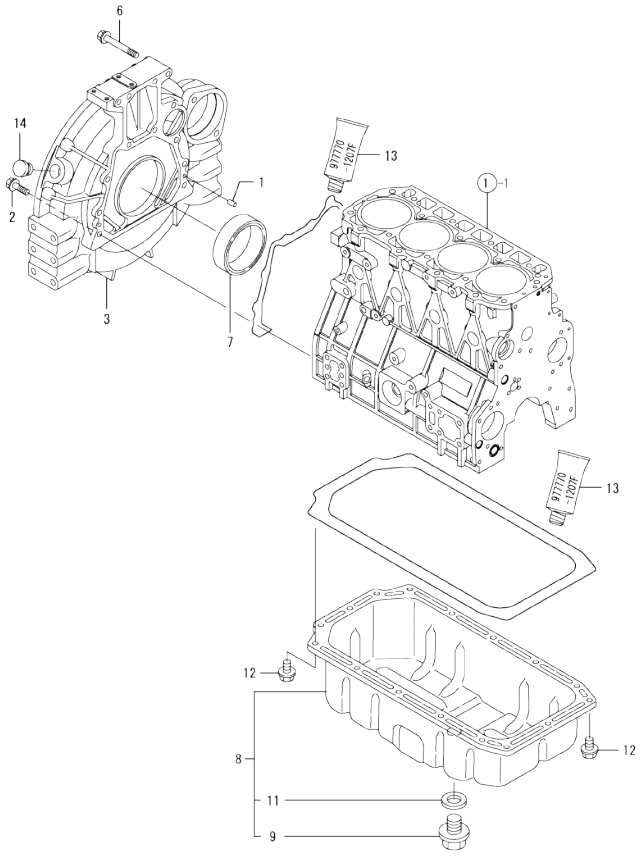

Remarks
(1) OPTIONAL PART.

(A)=4TNV94L-PIKA2
(B)=
(C)=
(D)=
(E)=
(F)=

No.	Lev.	Parts No.	Description	Q'ty (A)	(B)	(C)	(D)	(E)	(F)	I	R
1	1	129100-01580	PIN, M8X16	2							
2	1	26206-100352	BOLT, M10X 35 PLATED	9							
3	1	129953-01620	HOUSING, FLYWHEEL	1							
6	1	26206-100702	BOLT, M10X 70 PLATED	4							
7	1	124411-01780	SEAL, HTC95X115X12	1							
8	1	129916-01710	SUMP ASSY, OIL	1							
9	2	119640-01640	PLUG, DRAIN M22	1							
11	2	22190-220002	WASHER, SEAL 22	1							
12	1	26106-080122	BOLT, M8X 12 PLATED	16							
13	1	977770-1207F	GASKET.LIQUID	1							1
14	1	119620-01750	CAP	1							

N:Old ◄Yes/No► New. Q:Old ◄No/Yes► New. R:Old ◄Yes/Yes► New. S:Old ◄No/No► New. W:Add. Z:Discontinued. F:Interchangeable by set. K:Q'ty Change

Copyright (C) YANMAR GLOBAL CS CO., LTD. All RightsReserved.

Fig.4. CYLINDER HEAD & BONNET

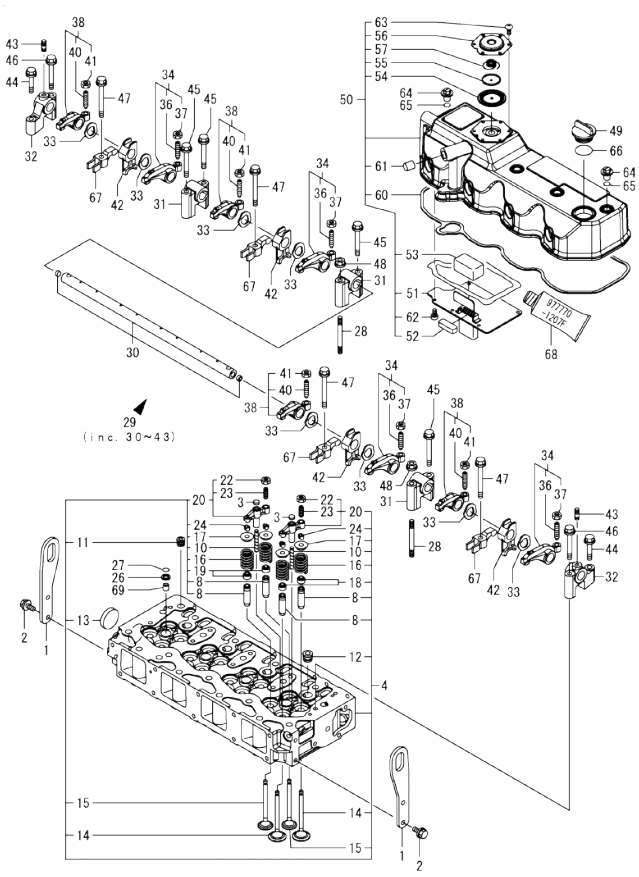

(A)=4TNV94L-PIKA2
(B)=
(C)=
(D)=
(E)=
(F)=

No.	Lev.	Parts No.	Description	Q'ty (A)	(B)	(C)	(D)	(E)	(F)	I	R
1	1	129907-07900	LIFTER	2							
2	1	26106-080162	BOLT, M8X 16 PLATED	4							
3	1	123907-11550	SEAT, VALVE BRIDGE	8							
4	1	129907-11700	HEAD ASSY, CYLINDER	1							
8	2	129907-11800	GUIDE, VALVE	16							2
10	2	123907-11820	GUIDE	8							
11	2	23876-020000	PLUG, R02	1							
12	2	23876-030000	PLUG, R03	4							
13	2	27241-400000	PLUG, 40	1							
14	2	129907-11100	VALVE, INTAKE	8							
15	2	129907-11110	VALVE, EXHAUST	8							
16	2	129907-11120	SPRING, VALVE	16							
17	2	119620-11180	RETAINER, SPRING	16							
18	2	124160-11340	SEAL, VALVE STEM	8							
19	2	119803-11340	SEAL, VALVE STEM	8							
20	2	129907-11510	BRIDGE ASSY, VALVE	8							
22	3	129150-11750	NUT, M8	8							
23	3	123907-11830	ADJUSTER	8							
24	2	27310-070001	COTTER, 7	16							
26	1	119625-11880	SEAT, NOZZLE	4							
27	1	24311-000120	O-RING, 1AP12.0	4							
28	1	119593-11301	STUD, M8X80	2							
29	1	129907-11341	SHAFT ASSY, ROCKER	1							
30	2	129907-11250	SHAFT, ROCKER ARM	1							
31	2	129907-11260	SUPPORT, ROCKER ARM	3							
32	2	129907-11270	SUPPORT, ROCKER ARM	2							
33	2	123907-11280	WASHER	8							
34	2	129907-11650	ARM, ROCKER	4							
36	3	129150-11230	SCREW, VALVE ADJUST	4							
37	3	129150-11750	NUT, M8	4							
38	2	129907-11660	ARM, ROCKER	4							
40	3	129150-11230	SCREW, VALVE ADJUST	4							
41	3	129150-11750	NUT, M8	4							
42	2	129907-11920	RETAINER	4							
43	2	26226-080222	STUD, M8X 22	2							
44	1	26106-080402	BOLT, M8X 40 PLATED	2							
45	1	26106-080602	BOLT, M8X 60 PLATED	4							
46	1	26106-080602	BOLT, M8X 60 PLATED	2							
47	1	129907-11950	BOLT, M8X75	4							
48	1	26306-080002	NUT, M8	2							
49	1	124160-01751	COVER, FILLER	1							
50	1	129907-11320	BONNET ASSY, HEAD	1							
51	2	129907-03011	PLATE	1							
52	2	129907-03061	BAFFLE, BREATHER	1							
53	2	129907-03070	BAFFLE, BREATHER	1							
54	2	123907-03100	DIAPHRAGM	1							
55	2	123907-03110	PLATE	1							
56	2	123907-03120	PLATE, BREATHER	1							
57	2	123907-03140	SPRING, DIAPHRAGM	1							
60	2	129907-11310	GASKET, BONNET	1							
61	2	119640-61400	PLUG	1							

Remarks
(1) OPTIONAL PART.
(2) REPAIR PART.

N:Old ←Yes/No→ New. Q:Old ←No/Yes→ New. R:Old ←Yes/Yes→ New. S:Old ←No/No→ New. W:Add. Z:Discontinued. F:Interchangeable by set. K:Q'ty Change

++ CONTINUE ++

Copyright (C) YANMAR GLOBAL CS CO., LTD. All RightsReserved.

Fig.4. CYLINDER HEAD & BONNET

(A)=4TNV94L-PIKA2
(B)=
(C)=
(D)=
(E)=
(F)=

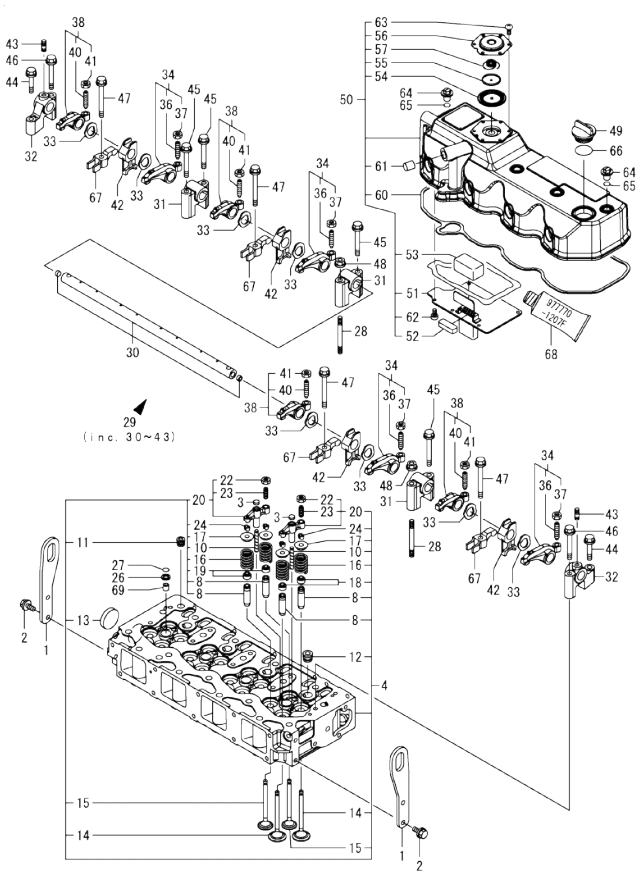

No.	Lev.	Parts No.	Description	Q'ty (A)	(B)	(C)	(D)	(E)	(F)	I	R
62	2	22857-500100	SCREW, 5X10	6							
63	2	22857-500100	SCREW, 5X10	6							
64	1	124160-11360	KNOB	4							
65	1	24311-000120	O-RING, 1AP12.0	4							
66	1	24311-000320	O-RING, 1AP32.0	1							
67	1	129907-11910	RETAINER, NOZZLE	4							
68	1	977770-1207F	GASKET.LIQUID	1							1
69	1	119802-11870	PROTECTOR, NOZZLE	4							

Remarks
(1) OPTIONAL PART.
(2) REPAIR PART.

N:Old ←Yes/No→ New. Q:Old ←No/Yes→ New, R:Old ←Yes/Yes→ New, S:Old ←No/No→ New, W:Add, Z:Discontinued. F:Interchangeable by set. K:Q'ty Change

Copyright (C) YANMAR GLOBAL CS CO., LTD. All RightsReserved.

Fig.5. SUCTION MANIFOLD & AIR CLEANER

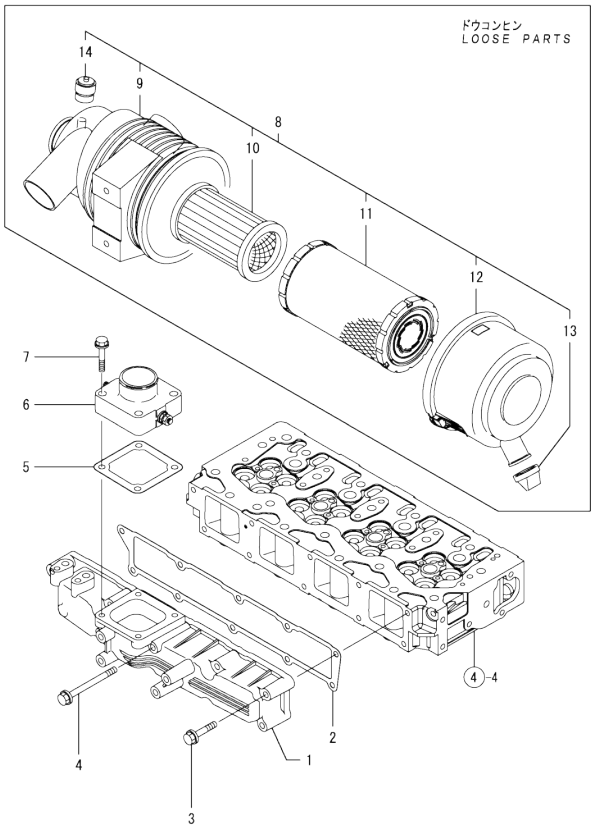

(A)=4TNV94L-PIKA2
(B)=
(C)=
(D)=
(E)=
(F)=

No.	Lev.	Parts No.	Description	Q'ty (A)	(B)	(C)	(D)	(E)	(F)	I	R
1	1	129907-12100	MANIFOLD, AIR INTAKE	1							
2	1	129907-12110	GASKET, MANIFOLD	1							
3	1	26106-080552	BOLT, M8X 55 PLATED	9							
4	1	26106-080852	BOLT, M8X 85 PLATED	1							
5	1	121850-77021	GASKET	1							
6	1	129915-77050	HEATER	1							
7	1	26106-080352	BOLT, M8X 35 PLATED	4							
8	1	129916-12500	CLEANER ASSY, AIR	1							
9	2	129916-12510	BODY ASSY	1							
10	2	119005-12571	ELEMENT	1							
11	2	129062-12560	ELEMENT	1							
12	2	129900-12530	COVER ASSY	1							
13	2	119808-12540	VALVE, UNLOADER	1							
14	2	126650-12680	INDICATOR	1							

N:Old ◄Yes/No► New. Q:Old ◄No/Yes► New. R:Old ◄Yes/Yes► New. S:Old ◄No/No► New. W:Add. Z:Discontinued. F:Interchangeable by set. K:Q'ty Change

Copyright (C) YANMAR GLOBAL CS CO., LTD. All RightsReserved.

Fig.6. EXHAUST MANIFOLD & SILENCER

(A)=4TNV94L-PIKA2
(B)=
(C)=
(D)=
(E)=
(F)=

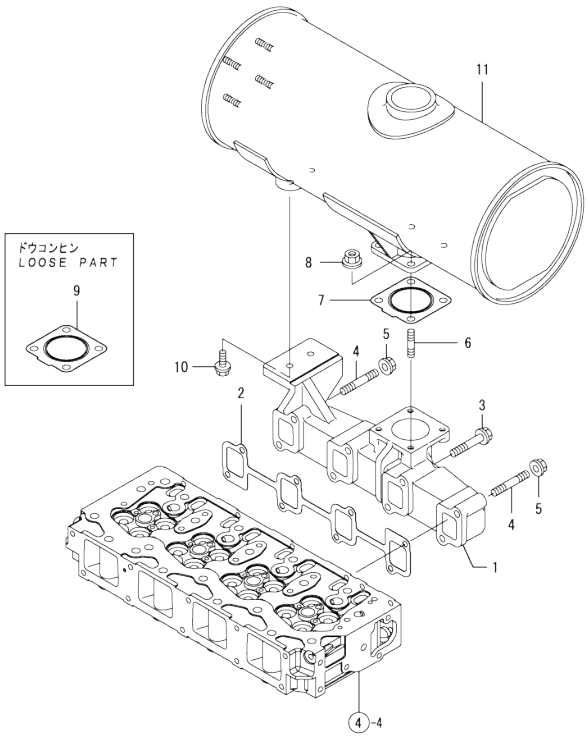

No.	Lev.	Parts No.	Description	Q'ty (A)	(B)	(C)	(D)	(E)	(F)	I	R
1	1	129907-13200	MANIFOLD, EXHAUST	1							
2	1	129900-13251	GASKET	1							
3	1	123900-13630	BOLT, M8X80	6							
4	1	123900-13610	STUD, M8X80	2							
5	1	26306-080002	NUT, M8	2							
6	1	119131-18320	STUD, M8X22	4							
7	1	129930-13201	GASKET, SILENCER	1							
8	1	26306-080002	NUT, M8	4							
9	1	129930-13201	GASKET, SILENCER	1							
10	1	26106-080252	BOLT, M8X 25 PLATED	2							
11	1	129907-13500	SILENCER	1							

N:Old ◄Yes/No► New. Q:Old ◄No/Yes► New. R:Old ◄Yes/Yes► New. S:Old ◄No/No► New. W:Add. Z:Discontinued. F:Interchangeable by set. K:Q'ty Change

Copyright (C) YANMAR GLOBAL CS CO., LTD. All RightsReserved.

Fig.7. CAMSHAFT & DRIVING GEAR

(A)=4TNV94L-PIKA2
(B)=
(C)=
(D)=
(E)=
(F)=

No.	Lev.	Parts No.	Description	Q'ty (A)	(B)	(C)	(D)	(E)	(F)	I	R
1	1	129150-14200	TAPPET	8							
2	1	129907-14400	ROD, PUSH	8							
3	1	129907-14581	CAMSHAFT ASSY	1							
3-1	1	129908-14581	CAMSHAFT ASSY	1						N	
	(A=EZZZZZ)										
4	2	129150-02450	BEARING, THRUST	1							
7	2	129900-14100	GEAR, CAMSHAFT	1							
8	2	22512-070140	KEY, 7X 14	1							
9	1	26106-080162	BOLT, M8X 16 PLATED	2							
10	1	123900-25060	SHAFT, IDLE GEAR	1							
11	1	129900-25100	GEAR ASSY, IDLE	1							
14	2	129150-25920	BUSH, IDLE GEAR	1							1
15	1	26106-080552	BOLT, M8X 55 PLATED	3							
16	1	129953-25300	BOLT	4							
17	1	129907-25900	GEAR, PUMP	1							
18	1	158563-51150	FLANGE	1							
19	1	22217-180000	WASHER, SPRING 18	1							
20	1	26776-180002	NUT, LOCK M18	1							

Remarks
(1) REPAIR PART.

N:Old $\frac{\text{Yes}}{\text{No}}$ New. Q:Old $\frac{\text{No}}{\text{Yes}}$ New. R:Old $\frac{\text{Yes}}{\text{Yes}}$ New. S:Old $\frac{\text{No}}{\text{No}}$ New. W:Add. Z:Discontinued. F:Interchangeable by set. K:Q'ty Change

Copyright (C) YANMAR GLOBAL CS CO., LTD. All RightsReserved.

Fig.8. CRANKSHAFT & PISTON

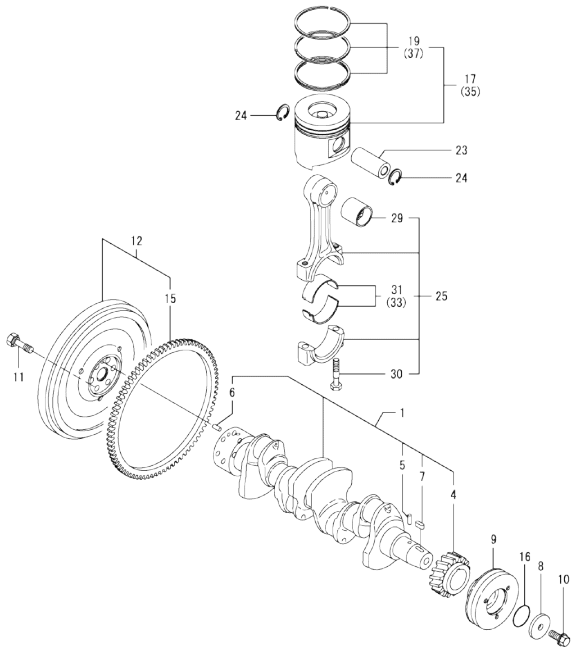

Remarks
(1) Repair part.
(2) Under-sized (U.S.=0.25) part.
(3) Over-sized (O.S.=0.25) part.
(4) Ref. No.17 is interchangeable with a set of Ref. No.17-1 and Fig.1 Ref. No.32-1.

(A)=4TNV94L-PIKA2 (D)=
(B)= (E)=
(C)= (F)=

No.	Lev.	Parts No.	Description	Q'ty (A)	(B)	(C)	(D)	(E)	(F)	I	R
1	1	129902-21000	CRANKSHAFT ASSY	1							
4	2	129900-21200	GEAR, CRANKSHAFT	1							
5	2	121850-21290	PIN	1							
6	2	121850-21920	PIN, PARALLEL 10X22	1							
7	2	22512-070140	KEY, 7X 14	1							
8	1	129960-21640	WASHER	1							
8-1	1	129960-21940	WASHER, V-PULLEY	1						N	
	(A=ED4975)										
9	1	129907-21650	V-PULLEY, CRANK 130	1							
10	1	129916-21610	BOLT	1							
11	1	121850-21130	BOLT, FLYWHEEL	6							
12	1	129916-21590	FLYWHEEL ASSY	1							
15	2	129900-21600	GEAR, RING	1							
16	1	24341-000530	O-RING, 1AS53.0	1							
16-1	1	129960-21930	GASKET, WASHER	1						N	
	(A=ED4975)										
17	1	129906-22080	PISTON ASSY	4							
17-1	1	129906-22090	PISTON ASSY	4						F	4
	(A=ED2495)										
19	2	129906-22050	RING SET, PISTON	4							
23	1	120130-22301	PIN, PISTON	4							
24	1	22252-000300	RING, 30	8							
25	1	129900-23001	ROD ASSY, CONNECTING	4							
29	2	129900-23911	BEARING, PISTON PIN	4							1
30	2	129900-23200	BOLT, CONNECTING ROD	8							
31	2	129900-23601	BEARING, CRANK PIN	4							
33	1	129900-23611	BEARING ASSY, 0.25US	4							2
35	1	129906-22900	PISTON ASSY, 0.25 OS	4							3
35-1	1	129906-22910	PISTON ASSY, 0.25 OS	4						F	3
	(A=ED2495)										
37	2	129916-22950	RING SET, PISTON .25	4							3

N:Old ←Yes/No→ New, Q:Old ←No/Yes→ New, R:Old ←Yes/Yes→ New, S:Old ←No/No→ New, W:Add, Z:Discontinued, F:Interchangeable by set, K:Q'ty Change

Copyright (C) YANMAR GLOBAL CS CO., LTD. All RightsReserved.

Fig.9. LUB. OIL SYSTEM

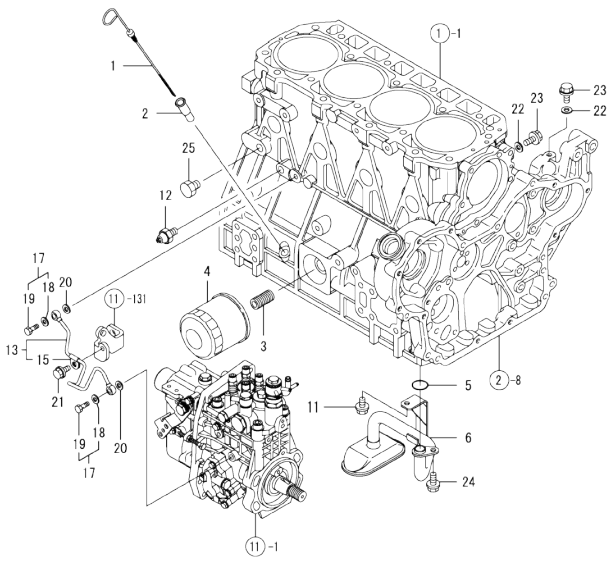

(A)=4TNV94L-PIKA2
(B)=
(C)=
(D)=
(E)=
(F)=

No.	Lev.	Parts No.	Description	Q'ty (A)	(B)	(C)	(D)	(E)	(F)	I	R
1	1	129953-34830	DIPSTICK, OIL	1							
2	1	121520-34810	GUIDE, DIPSTICK	1							
3	1	119000-35140	BOLT, FILTER	1							
4	1	129150-35153	FILTER 80X80L	1							1
5	1	129900-32030	O-RING, P20	1							
6	1	129953-35000	PIPE ASSY, OIL INLET	1							
11	1	26106-080122	BOLT, M8X 12 PLATED	1							
12	1	121252-39450	SWITCH, 0.5KG	1							
13	1	129907-39061	PIPE ASSY, OIL	1							
15	2	123907-39500	RETAINER	1							
17	1	129005-59830	BOLT ASSY, JOINT M8	2							
18	2	22190-080002	WASHER, SEAL 6	2							
19	2	23857-030000	BOLT, JOINT 3	2							
20	1	22190-080002	WASHER, SEAL 6	2							
21	1	26106-080122	BOLT, M8X 12 PLATED	1							
22	1	22190-080002	WASHER, SEAL 6	2							
23	1	26106-080122	BOLT, M8X 12 PLATED	2							
24	1	26106-080162	BOLT, M8X 16 PLATED	1							
25	1	171056-49120	PLUG, DRAIN	1							

Remarks
(1) REPAIR PART.

N:Old ←Yes/No→ New. Q:Old ←No/Yes→ New. R:Old ←Yes/Yes→ New. S:Old ←No/No→ New. W:Add. Z:Discontinued. F:Interchangeable by set. K:Q'ty Change

Copyright (C) YANMAR GLOBAL CS CO., LTD. All RightsReserved.

Fig.10. COOLING WATER SYSTEM

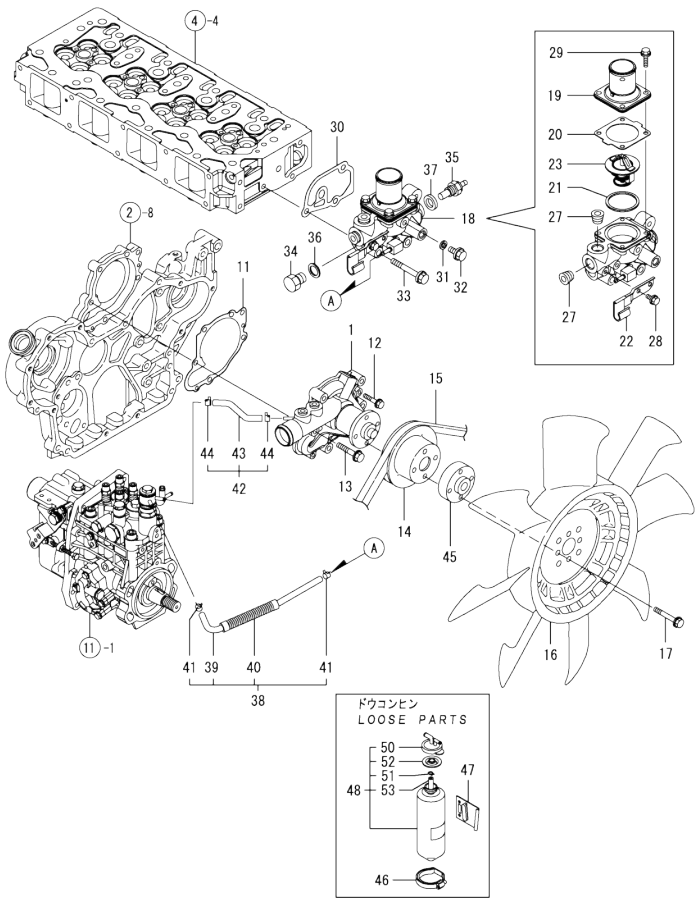

(A)=4TNV94L-PIKA2 (D)=
(B)= (E)=
(C)= (F)=

No.	Lev.	Parts No.	Description	Q'ty (A)	(B)	(C)	(D)	(E)	(F)	I	R
1	1	129907-42000	PUMP ASSY, WATER	1							
11	1	129900-42020	GASKET, WATER PUMP	1							
12	1	26106-060302	BOLT, M6X 30 PLATED	2							
13	1	26106-080552	BOLT, M8X 55 PLATED	5							
14	1	129900-42461	V-PULLEY	1							
15	1	25132-004100	V-BELT, A41	1							
16	1	119130-44740	FAN, COOLING D=410	1							
17	1	26106-080302	BOLT, M8X 30 PLATED	4							
18	1	129907-49800	CASE ASSY,THERMOSTAT	1							
19	2	129916-49530	COVER, THERMOSTAT	1							
20	2	121850-49540	GASKET, THERMOSTAT	1							
21	2	121850-49550	GASKET, THERMOSTAT	1							
22	2	129907-49730	RETAINER, PIPE	1							
23	2	121850-49810	THERMOSTAT, 71	1							
27	2	23875-030000	PLUG, R03	2							
28	2	26106-060122	BOLT, M6X 12 PLATED	1							
29	2	26106-060202	BOLT, M6X 20 PLATED	4							
30	1	129900-49870	GASKET	1							
31	1	23414-080000	GASKET, 8X1.0	1							
32	1	26106-080122	BOLT, M8X 12 PLATED	1							
33	1	26106-080602	BOLT, M8X 60 PLATED	3							
34	1	121450-42450	PLUG, M16	1							
35	1	171056-49351	SENSOR	1							
36	1	124465-44950	GASKET, 16	1							
37	1	129150-49360	GASKET	1							
38	1	129907-49610	HOSE ASSY, WATER	1							
39	2	129907-49710	PIPE ASSY, WATER	1							
40	2	129907-49750	TUBE, CORRUGATED	1							
41	2	124722-59050	CLIP, HOSE 9	2							
42	1	129907-49620	HOSE ASSY, WATER	1							
43	2	129907-49720	PIPE ASSY, WATER	1							
44	2	124722-59050	CLIP, HOSE 9	2							
45	1	119130-44760	SPACER, FAN	1							
46	1	124450-44550	BAND	1							
47	1	121256-44600	BRACKET, SUB TANK	1							
48	1	171064-44510	TANK ASSY, SUB	1							
50	2	121450-44531	CAP	1							
51	2	124450-44560	RETAINER	1							
52	2	121470-44581	GASKET	1							
53	2	23065-070225	HOSE 7X 225	1							

N:Old ◄Yes/No► New. Q:Old ◄No/Yes► New. R:Old ◄Yes/Yes► New. S:Old ◄No/No► New. W:Add. Z:Discontinued. F:Interchangeable by set. K:Q'ty Change

Copyright (C) YANMAR GLOBAL CS CO., LTD. All RightsReserved.

Fig.11. FUEL INJECTION PUMP

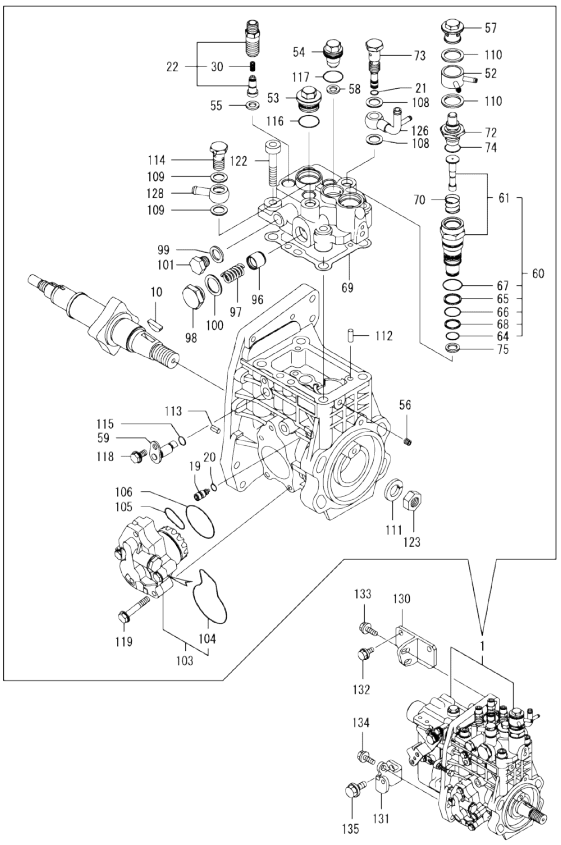

Remarks
(1) GOVERNOR ASSY(FIG.12) IS INCORPORATED IN THIS FOP.CMP (REF.NO.1).

(A)=4TNV94L-PIKA2
(B)=
(C)=
(D)=
(E)=
(F)=

No.	Lev.	Parts No.	Description	Q'ty (A)	(B)	(C)	(D)	(E)	(F)	I	R
1	1	729932-51330	PUMP ASSY, INJECTION	1							1
10	2	144626-51090	KEY, 5X19	1							
19	2	158600-51270	STOPPER, TAPPET	1							
20	2	158563-51281	O-RING, 4D S6	1							
21	2	158563-51281	O-RING, 4D S6	1							
22	2	129509-51390	VALVE ASSY, DELIVERY	4						W	
	(A=*2008.02.)										
30	3	158563-51330	SPRING, DELIVERY	4							
52	2	158553-51551	JOINT	1							
53	2	158601-51550	PLUG	1							
54	2	129907-51560	PLUG, BARREL	1							
55	2	158552-51570	GASKET	4							
56	2	158557-51570	PLUG	1							
57	2	158601-51570	PLUG	1							
58	2	129906-51580	GASKET	1							
59	2	158552-51580	LIFTER	1							
60	2	119802-51590	TIMER SET	1							
61	3	119802-51600	TIMER ASSY	1							
64	3	158553-51670	O-RING, 1011	1							
65	3	119802-51680	RING, BACK UP	1							
66	3	119802-51690	O-RING	1							
67	3	24356-010200	O-RING, 4D1020	1							
68	3	24372-000150	RING, BACK UP T2P15	1							
69	2	158560-51600	GASKET	1							
70	2	158553-51630	SPRING, TIMER	1							
72	2	158553-51640	ELEMENT	1							
73	2	158601-51650	JOINT, OVER FLOW	1							
74	2	158553-51660	O-RING, P14	1							
75	2	158553-51680	GASKET	1							
96	2	158601-51770	PISTON	1							
97	2	158552-51781	SPRING	1							
98	2	158601-51790	PLUG	1							
99	2	22190-120002	WASHER, SEAL 12	1							
100	2	22190-180002	WASHER, SEAL 18	1							
101	2	23887-120002	PLUG, 12	1							
103	2	158552-52100	PUMP ASSY, FUEL FEED	1							
104	3	158552-52500	O-RING	1							
105	2	158552-52310	O-RING	1							
106	2	158552-52400	O-RING, 4E S42	1							
108	2	22190-120002	WASHER, SEAL 12	2							
109	2	22190-120002	WASHER, SEAL 12	2							
110	2	22190-180002	WASHER, SEAL 18	2							
111	2	22217-180000	WASHER, SPRING 18	1							
112	2	22312-050140	PIN, PARALLEL M5X14	2							
113	2	22351-050010	PIN, SPRING 5.0X10	2							
114	2	23857-060000	BOLT, JOINT 6	1							
115	2	24311-000070	O-RING, 1AP7.0	1							
116	2	24356-010200	O-RING, 4D1020	1							
117	2	24356-020210	O-RING, 4D2021	1							
118	2	26106-060102	BOLT, M6X 10 PLATED	1							
119	2	26106-060352	BOLT, M6X 35 PLATED	4							

N:Old ←Yes/No→ New. Q:Old ←No/Yes→ New. R:Old ←Yes/Yes→ New. S:Old ←No/No→ New. W:Add. Z:Discontinued. F:Interchangeable by set. K:Q'ty Change

++ CONTINUE ++

Copyright (C) YANMAR GLOBAL CS CO., LTD. All RightsReserved.

Fig.11. FUEL INJECTION PUMP

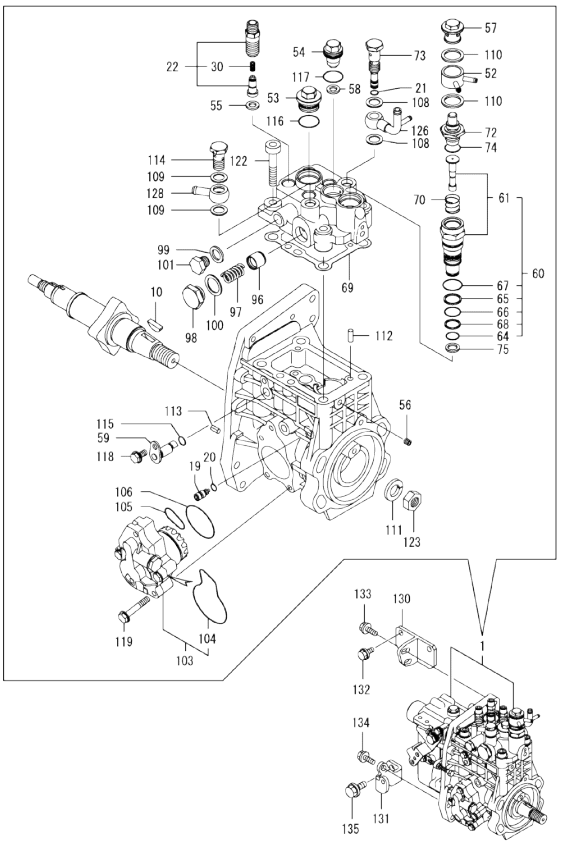

Remarks
(1) GOVERNOR ASSY(FIG.12) IS INCORPORATED IN THIS FOP.CMP (REF.NO.1).

(A)=4TNV94L-PIKA2 (D)=
(B)= (E)=
(C)= (F)=

No.	Lev.	Parts No.	Description	Q'ty (A)	(B)	(C)	(D)	(E)	(F)	I	R
122	2	26450-100452	BOLT, M10X 45	4							
123	2	26776-180002	NUT, LOCK M18	1							
126	2	158552-51670	JOINT, OVER FLOW	1							
128	2	129916-59020	JOINT, PIPE 12	1							
130	1	129907-01950	RETAINER	1							
131	1	129907-01960	RETAINER	1							
132	1	26106-080162	BOLT, M8X 16 PLATED	2							
133	1	26106-080222	BOLT, M8X 22 PLATED	2							
134	1	26106-080222	BOLT, M8X 22 PLATED	1							
135	1	26106-100202	BOLT, M10X 20 PLATED	1							

N:Old ←Yes/No→ New. Q:Old ←No/Yes→ New. R:Old ←Yes/Yes→ New. S:Old ←No/No→ New. W:Add. Z:Discontinued. F:Interchangeable by set. K:Q'ty Change

Copyright (C) YANMAR GLOBAL CS CO., LTD. All RightsReserved.

Fig.12. GOVERNOR

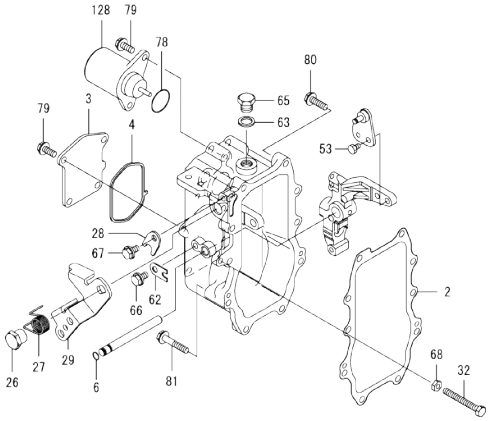

Remarks
* THIS FIGURE(GOVERNOR ASSY)IS INCORPORATED IN THE FUEL INJECTION PUMP ASSY(FIG.11).

(A)=4TNV94L-PIKA2 (D)=
(B)= (E)=
(C)= (F)=

No.	Lev.	Parts No.	Description	Q'ty (A)	(B)	(C)	(D)	(E)	(F)	I	R
2	2	158560-61050	GASKET	1							
3	2	158560-61061	COVER, GOVERNOR CASE	1							
4	2	158560-61071	GASKET	1							
6	2	129155-51280	O-RING, S6	1							
26	2	129255-61410	NUT, LOCK	1							
27	2	119807-61420	SPRING, RETURN	1							
28	2	158560-61430	RETAINER, SHAFT	1							
29	2	158560-61442	LEVER, REGULATOR	1							
32	2	129155-61460	BOLT, IDLE	1							
53	2	26116-060102	BOLT, M6X 10 PLATED	1							
62	2	119660-61901	RETAINER, SHAFT	1							
63	2	22190-160002	WASHER, SEAL 16	1							
65	2	23887-160002	PLUG, 16	1							
66	2	26106-060102	BOLT, M6X 10 PLATED	1							
67	2	26106-060102	BOLT, M6X 10 PLATED	1							
68	2	26756-060002	NUT, LOCK M6	1							
78	2	158552-61900	O-RING	1							
79	2	26106-060142	BOLT, M6X 14 PLATED	6							
80	2	26106-060252	BOLT, M6X 25 PLATED	8							
81	2	26106-060402	BOLT, M6X 40 PLATED	2							
128	2	119233-77932	SOLENOID, STOP	1							

N:Old ←Yes/No→ New. Q:Old ←No/Yes→ New. R:Old ←Yes/Yes→ New. S:Old ←No/No→ New. W:Add. Z:Discontinued. F:Interchangeable by set. K:Q'ty Change

Copyright (C) YANMAR GLOBAL CS CO., LTD. All RightsReserved.

Fig.13. FUEL INJECTION VALVE

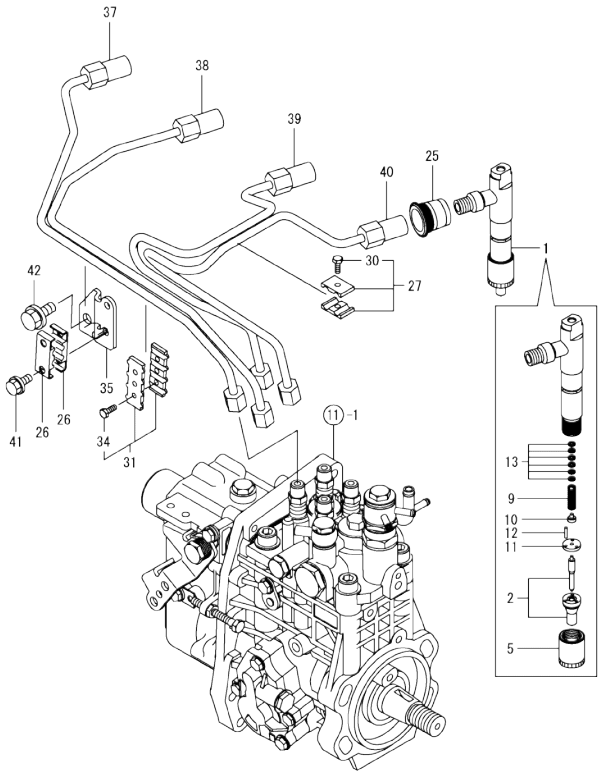

(A)=4TNV94L-PIKA2 (D)=
(B)= (E)=
(C)= (F)=

No.	Lev.	Parts No.	Description	Q'ty (A)	(B)	(C)	(D)	(E)	(F)	I	R
1	1	729906-53100	VALVE ASSY,INJECTION	4							
2	2	129906-53000	VALVE ASSY,INJECTION	4							
5	2	114250-53080	NUT, NOZZLE D16.95	4							
9	2	114250-53120	SPRING, NOZZLE	4							
10	2	114250-53130	SEAT, SPRING	4							
11	2	114250-53140	PLATE	4							
12	2	114250-53210	PIN	8							
13	2	114250-53400	SHIM SET	4							
25	1	123907-11601	SEAL	4							
26	1	122780-59100	RETAINER	2							
27	1	119305-59120	RETAINER, PIPE	1							
30	2	129150-59131	BOLT, M4X14	1							
31	1	129550-59120	RETAINER, PIPE	1							
34	2	129150-59131	BOLT, M4X14	2							
35	1	129907-59710	SUPPORT	1							
37	1	129907-59810	PIPE ASSY, INJECTION	1							
38	1	129907-59820	PIPE ASSY, INJECTION	1							
39	1	129907-59830	PIPE ASSY, INJECTION	1							
40	1	129907-59840	PIPE ASSY, INJECTION	1							
41	1	26106-060162	BOLT, M6X 16 PLATED	2							
42	1	26106-080182	BOLT, M8X 18 PLATED	1							

N:Old ◄Yes/No► New. Q:Old ◄No/Yes► New. R:Old ◄Yes/Yes► New. S:Old ◄No/No► New. W:Add. Z:Discontinued. F:Interchangeable by set. K:Q'ty Change

Copyright (C) YANMAR GLOBAL CS CO., LTD. All RightsReserved.

Fig.14. FUEL LINE

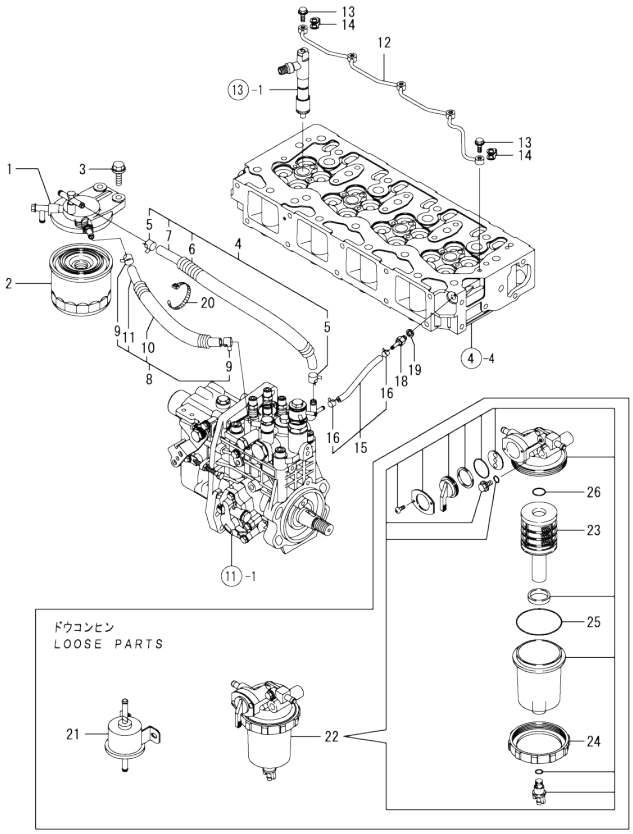

(A)=4TNV94L-PIKA2
(B)=
(C)=
(D)=
(E)=
(F)=

No.	Lev.	Parts No.	Description	Q'ty (A)	(B)	(C)	(D)	(E)	(F)	I	R
1	1	129004-55612	BRACKET, FILTER	1							
2	1	119802-55801	FILTER, FUEL	1							
3	1	26106-080302	BOLT, M8X 30 PLATED	2							
4	1	129457-59010	PIPE ASSY, FUEL	1							
5	2	124766-59050	CLIP, HOSE 12	2							
6	2	129957-59120	TUBE, CORRUGATED	1							
7	2	105025-59750	PIPE, FUEL	1							
8	1	129981-59010	PIPE ASSY, FUEL	1							
9	2	124766-59050	CLIP, HOSE 12	2							
10	2	129950-59221	TUBE, CORRUGATED	1							
11	2	129980-59510	PIPE, FUEL	1							
12	1	129907-59140	PIPE ASSY, RETURN	1							
13	1	123907-59540	BOLT, PIPE JOINT M6	5							
14	1	123907-59550	GASKET	5							
15	1	129486-59551	PIPE ASSY, RETURN	1							
16	2	124722-59050	CLIP, HOSE 9	2							
18	1	123907-59560	JOINT	1							
19	1	22190-080002	WASHER, SEAL 6	1							
20	1	121750-59890	BAND, 140	1							
21	1	119225-52102	PUMP ASSY, FUEL FEED	1							
22	1	119802-55700	SEPARATOR ASSY	1							
23	2	119802-55710	ELEMENT	1							
24	2	129100-55690	RING, RETAINING	1							
25	2	24321-000650	O-RING, 1AG65.0	1							
26	2	24311-000160	O-RING, 1AP16.0	1							

N:Old ←Yes/No→ New. Q:Old ←No/Yes→ New. R:Old ←Yes/Yes→ New. S:Old ←No/No→ New. W:Add. Z:Discontinued. F:Interchangeable by set. K:Q'ty Change

Copyright (C) YANMAR GLOBAL CS CO., LTD. All RightsReserved.

Fig.15. STARTING MOTOR

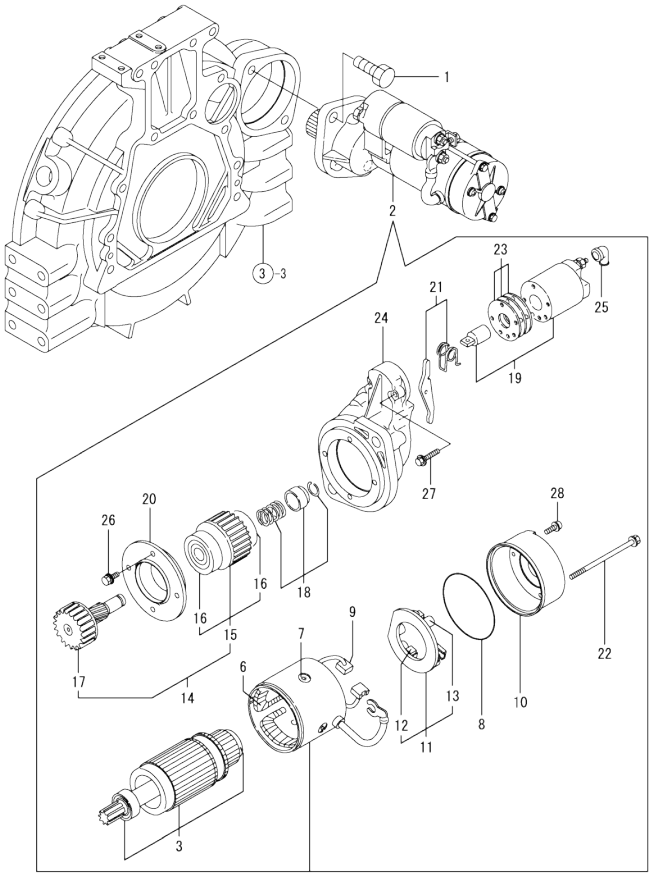

(A)=4TNV94L-PIKA2 (D)=
(B)= (E)=
(C)= (F)=

No.	Lev.	Parts No.	Description	Q'ty (A)	(B)	(C)	(D)	(E)	(F)	I	R
1	1	26116-120302	BOLT, M12X 30 PLATED	2							
2	1	129940-77010	STARTER 12V,3KW	1							
3	2	129940-77100	ARMATURE ASSY	1							
6	2	129940-77130	COIL ASSY, FIELD	1							
7	2	129940-77140	SCREW, POLE CORE SET	4							
8	2	129940-77150	O-RING	1							
9	2	129940-77160	BRUSH (+)	2							
10	2	129940-77170	COVER, REAR	1							
11	2	129940-77180	HOLDER, BRUSH	1							
12	3	129940-77200	BRUSH (-)	2							
13	3	129940-77190	SPRING, BRUSH	1							
14	2	123900-77510	PINION ASSY	1							
15	3	123900-77520	CLUTCH ASSY	1							
16	4	X2240610100	BALL BEARING (3	2							
17	3	123900-77540	SHAFT, PINION	1							
18	2	119131-77550	STOPPER KIT, PINION	1							
19	2	129940-77210	SWITCH ASSY,MAGNETIC	1							
20	2	129940-77230	RETAINER, BEARING	1							
21	2	129940-77240	SHIFT LEVER SET	1							
22	2	129940-77260	THROUGHT BOLT	2							
23	2	129940-77250	COVER ASSY, DUST	1							
24	2	129940-77220	HOUSING, GEARS	1							
25	2	121254-77810	COVER, TERMINAL	1							
26	2	129940-77270	BOLT M6X 20	4							
27	2	114371-79070	BOLT M 6X 37	2							
28	2	129940-77280	SCREW M4X 10	2							

N:Old ←Yes/No→ New. Q:Old ←No/Yes→ New. R:Old ←Yes/Yes→ New. S:Old ←No/No→ New. W:Add. Z:Discontinued. F:Interchangeable by set. K:Q'ty Change

Copyright (C) YANMAR GLOBAL CS CO., LTD. All RightsReserved.

Fig.16. GENERATOR

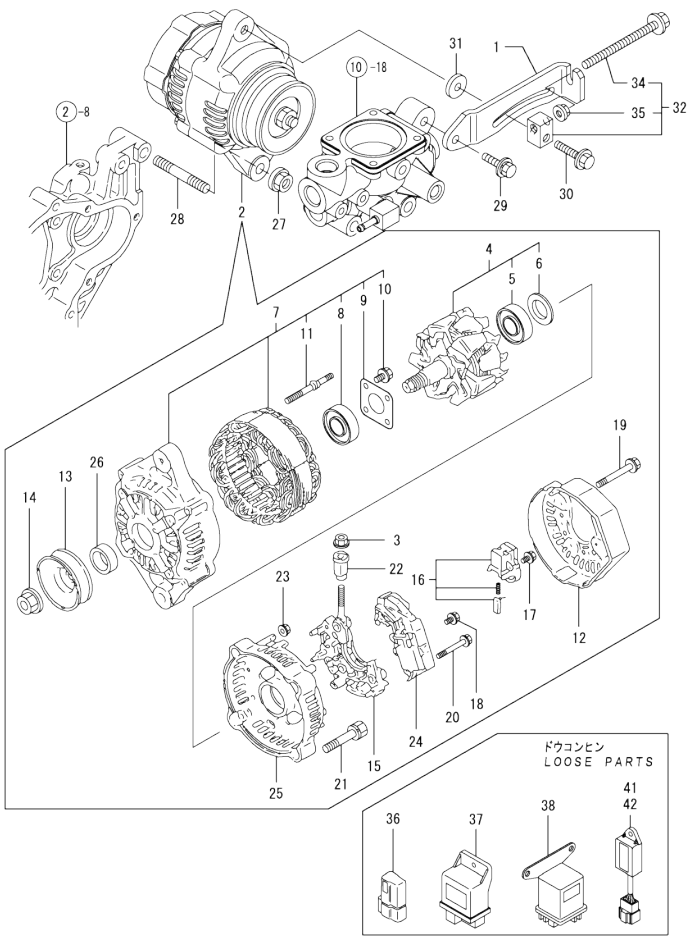

(A)=4TNV94L-PIKA2
(B)=
(C)=
(D)=
(E)=
(F)=

No.	Lev.	Parts No.	Description	Q'ty (A)	(B)	(C)	(D)	(E)	(F)	I	R
1	1	129906-77300	ADJUSTER	1							
2	1	119626-77210	ALTERNATOR, 12V-55A	1							
3	2	X9490561001	NUT	1							
4	2	129052-77380	ROTOR ASSY	1							
5	3	123501-79240	BEARING, BALL	1							
6	3	119620-79250	COVER, BEARING	1							
7	2	129052-77422	FRAME ASSY	1							
8	3	119620-79200	BALL BEARING	1							
9	3	119620-79210	PLATE	1							
10	3	119620-79220	SCREW	4							
11	3	119620-79230	BOLT, STUD	2							
12	2	128401-77440	FRAME	1							
13	2	119620-77461	PULLEY	1							
14	2	119620-77471	NUT	1							
15	2	129052-79260	HOLDER	1							
16	2	129052-79270	HOLDER, BRUSH	1							
17	2	119620-79290	SCREW	6							
18	2	119620-79300	SCREW	1							
19	2	119620-79310	BOLT	3							
20	2	119620-79320	SCREW W/WASHER	2							
21	2	119620-79330	BOLT	2							
22	2	119620-79340	INSULATION BUSH	1							
23	2	119620-79350	NUT	2							
24	2	129423-77710	REGULATOR ASSY	1							
25	2	119626-79410	COVER	1							
25-1	2	119626-77450	COVER, END, RR	1						N	
	(A=FROM 1ST)										
26	2	119620-77490	COLLAR	1							
27	1	26306-100002	NUT, M10	1							
28	1	129795-01900	STUD	1							
29	1	26014-080252	BOLT, M8X 25	1							
30	1	26106-080552	BOLT, M8X 55 PLATED	1							
31	1	121236-77340	SPACER	1							
32	1	119624-77351	BLOCK ASSY, ADJUSTER	1							
34	2	26106-081004	BOLT, M8X100 PLATED	1							
35	2	26306-080002	NUT, M8	1							
36	1	119643-66900	DIODE	1							
37	1	119802-77200	RELAY, SAFETY	1							
38	1	119650-77910	RELAY ASSY, GLOW	1							
41	1	128300-77920	TIMER	1							
42	1	129211-77920	TIMER	1							

N:Old ◄Yes/No► New. Q:Old ◄No/Yes► New. R:Old ◄Yes/Yes► New. S:Old ◄No/No► New. W:Add. Z:Discontinued. F:Interchangeable by set. K:Q'ty Change

Copyright (C) YANMAR GLOBAL CS CO., LTD. All RightsReserved.

Fig.17. GASKET SET

(A)=4TNV94L-PIKA2
(B)=
(C)=
(D)=
(E)=
(F)=

No.	Lev.	Parts No.	Description	Q'ty (A)	(B)	(C)	(D)	(E)	(F)	I	R
1	1	729906-92751	GASKET SET	1							1
1-1	1	129932-92650	GASKET SET	1						S	1
	(A=*2009.12)										
2	2	24351-030750	O-RING, 1A3075	1							
3	2	123907-59550	GASKET	5							
4	2	129906-01340	GASKET, HEAD	1							
4-1	2	129906-01350	GASKET, HEAD	1						S	
	(A=*2009.12)										
5	2	124160-11340	SEAL, VALVE STEM	8							
6	2	119802-11870	PROTECTOR, NOZZLE	4							
7	2	119625-11880	SEAT, NOZZLE	4							
8	2	129907-11310	GASKET, BONNET	1							
9	2	129907-12110	GASKET, MANIFOLD	1							
10	2	129900-13251	GASKET	1							
11	2	129930-13201	GASKET, SILENCER	2							
12	2	119803-11340	SEAL, VALVE STEM	8							
13	2	129900-32030	O-RING, P20	2							
14	2	129900-32040	O-RING, P14	1							
15	2	124465-44950	GASKET, 16	1							
16	2	129900-49870	GASKET	1							
17	2	121850-49550	GASKET, THERMOSTAT	1							
18	2	121850-77021	GASKET	1							
19	2	121850-49540	GASKET, THERMOSTAT	1							
20	2	24341-000530	O-RING, 1AS53.0	1							
21	2	129150-49360	GASKET	1							
22	2	24311-000070	O-RING, 1AP7.0	1							
23	2	24311-000120	O-RING, 1AP12.0	8							
24	2	24311-000320	O-RING, 1AP32.0	3							
25	2	22190-080002	WASHER, SEAL 6	7							
26	2	23414-080000	GASKET, 8X1.0	1							
27	2	124240-01883	GASKET	1							
28	2	129900-42020	GASKET, WATER PUMP	1							
29	2	22190-220002	WASHER, SEAL 22	1							
30	1	129400-92440	HONE	1							1
31	1	977770-1207F	GASKET.LIQUID	1							1

Remarks
(1) OPTIONAL PARTS.

N:Old ←Yes/No→ New. Q:Old ←No/Yes→ New. R:Old ←Yes/Yes→ New. S:Old ←No/No→ New. W:Add. Z:Discontinued. F:Interchangeable by set. K:Q'ty Change

Copyright (C) YANMAR GLOBAL CS CO., LTD. All RightsReserved.

Parts No. Index

Parts No.	Fig. No.	Ref. No.
105025-59750	14	7
114250-53080	13	5
114250-53120	13	9
114250-53130	13	10
114250-53140	13	11
114250-53210	13	12
114250-53400	13	13
114371-79070	15	27
119000-35140	9	3
119005-12571	5	10
119130-44740	10	16
119130-44760	10	45
119131-18320	6	6
119131-77550	15	18
119225-52102	14	21
119233-77932	12	128
119305-59120	13	27
119593-11301	4	28
119620-01750	3	14
119620-11180	4	17
119620-77461	16	13
119620-77471	16	14
119620-77490	16	26
119620-79200	16	8
119620-79210	16	9
119620-79220	16	10
119620-79230	16	11
119620-79250	16	6
119620-79290	16	17
119620-79300	16	18
119620-79310	16	19
119620-79320	16	20
119620-79330	16	21
119620-79340	16	22
119620-79350	16	23
119624-77351	16	32
119625-11880	4	26
	17	7
119626-77210	16	2
119626-77450	16	25 -1
119626-79410	16	25
119640-01640	3	9
119640-61400	4	61
119643-66900	16	36
119650-77910	16	38
119660-61901	12	62
119802-11870	4	69
	17	6
119802-51590	11	60
119802-51600	11	61

Parts No.	Fig. No.	Ref. No.
119802-51680	11	65
119802-51690	11	66
119802-55700	14	22
119802-55710	14	23
119802-55801	14	2
119802-77200	16	37
119803-11340	4	19
	17	12
119807-61420	12	27
119808-12540	5	13
120130-22301	8	23
121236-77340	16	31
121252-39450	9	12
121254-77810	15	25
121256-44600	10	47
121450-42450	10	34
121450-44531	10	50
121470-44581	10	52
121520-34810	9	2
121750-59890	14	20
121850-21130	8	11
121850-21290	8	5
121850-21920	8	6
121850-49540	10	20
	17	19
121850-49550	10	21
	17	17
121850-49810	10	23
121850-77021	5	5
	17	18
122780-59100	13	26
123501-79240	16	5
123900-13610	6	4
123900-13630	6	3
123900-25060	7	10
123900-77510	15	14
123900-77520	15	15
123900-77540	15	17
123907-03100	4	54
123907-03110	4	55
123907-03120	4	56
123907-03140	4	57
123907-11280	4	33
123907-11550	4	3
123907-11601	13	25
123907-11820	4	10
123907-11830	4	23
123907-39500	9	15
123907-59540	14	13
123907-59550	14	14

Parts No.	Fig. No.	Ref. No.
123907-59550	17	3
123907-59560	14	18
124160-01751	2	35
	4	49
124160-11340	4	18
	17	5
124160-11360	4	64
124240-01871	2	43
124240-01883	2	44
	17	27
124411-01780	3	7
124450-44550	10	46
124450-44560	10	51
124465-44950	10	36
	17	15
124722-59050	10	41
		44
	14	16
124766-59050	14	5
		9
126650-12680	5	14
128300-77920	16	41
128401-77440	16	12
129001-91810	2	24
		25
129004-55612	14	1
129005-59830	9	17
129052-77380	16	4
129052-77422	16	7
129052-79260	16	15
129052-79270	16	16
129062-12560	5	11
129100-01580	2	5
	3	1
129100-55690	14	24
129150-02450	7	4
129150-11230	4	36
		40
129150-11750	4	22
		37
		41
129150-14200	7	1
129150-25920	7	14
129150-35153	9	4
129150-49360	10	37
	17	21
129150-59131	13	30
		34
129155-51280	12	6
129155-61460	12	32

Parts No.	Fig. No.	Ref. No.
129211-77920	16	42
129255-61410	12	26
129400-92440	17	30
129423-77710	16	24
129457-59010	14	4
129486-59551	14	15
129509-51390	11	22
129550-59120	13	31
129795-01900	16	28
129900-01200	1	31
129900-01250	1	5
129900-01740	2	6
129900-01780	2	4
129900-01850	2	39
129900-01870	2	40
129900-02020	1	7
129900-02341	1	34
129900-02410	1	10
129900-02931	1	28
129900-02941	1	37
129900-12530	5	12
129900-13251	6	2
	17	10
129900-14100	7	7
129900-21200	8	4
129900-21600	8	15
129900-23001	8	25
129900-23200	8	30
129900-23601	8	31
129900-23611	8	33
129900-23911	8	29
129900-25100	7	11
129900-32001	2	11
129900-32030	2	22
	9	5
	17	13
129900-32040	2	23
	17	14
129900-42020	10	11
	17	28
129900-42461	10	14
129900-49870	10	30
	17	16
129902-21000	8	1
129906-01340	1	32
	17	4
129906-01350	1	32 -1
	17	4 -1
129906-22050	8	19
129906-22080	8	17

Parts No. Index

Parts No.	Fig. No.	Ref. No.
129906-22090	8	17 -1
129906-22900	8	35
129906-22910	8	35 -1
129906-51580	11	58
129906-53000	13	2
129906-77300	16	1
129907-01190	1	33
129907-01500	2	8
129907-01950	11	130
129907-01960	11	131
129907-03011	4	51
129907-03061	4	52
129907-03070	4	53
129907-07900	4	1
129907-11100	4	14
129907-11110	4	15
129907-11120	4	16
129907-11250	4	30
129907-11260	4	31
129907-11270	4	32
129907-11310	4	60
	17	8
129907-11320	4	50
129907-11341	4	29
129907-11510	4	20
129907-11650	4	34
129907-11660	4	38
129907-11700	4	4
129907-11800	4	8
129907-11910	4	67
129907-11920	4	42
129907-11950	4	47
129907-12100	5	1
129907-12110	5	2
	17	9
129907-13200	6	1
129907-13500	6	11
129907-14400	7	2
129907-14581	7	3
129907-21650	8	9
129907-25900	7	17
129907-39061	9	13
129907-42000	10	1
129907-49610	10	38
129907-49620	10	42
129907-49710	10	39
129907-49720	10	43
129907-49730	10	22
129907-49750	10	40
129907-49800	10	18

Parts No.	Fig. No.	Ref. No.
129907-51560	11	54
129907-59140	14	12
129907-59710	13	35
129907-59810	13	37
129907-59820	13	38
129907-59830	13	39
129907-59840	13	40
129908-14581	7	3 -1
129915-77050	5	6
129916-01710	3	8
129916-12500	5	8
129916-12510	5	9
129916-21590	8	12
129916-21610	8	10
129916-22950	8	37
129916-49530	10	19
129916-59020	11	128
129930-13201	6	7
		9
	17	11
129932-92650	17	1 -1
129940-77010	15	2
129940-77100	15	3
129940-77130	15	6
129940-77140	15	7
129940-77150	15	8
129940-77160	15	9
129940-77170	15	10
129940-77180	15	11
129940-77190	15	13
129940-77200	15	12
129940-77210	15	19
129940-77220	15	24
129940-77230	15	20
129940-77240	15	21
129940-77250	15	23
129940-77260	15	22
129940-77270	15	26
129940-77280	15	28
129950-59221	14	10
129953-01620	3	3
129953-25300	7	16
129953-34830	9	1
129953-35000	9	6
129957-59120	14	6
129960-21640	8	8
129960-21930	8	16 -1
129960-21940	8	8 -1
129980-59510	14	11
129981-59010	14	8

Parts No.	Fig. No.	Ref. No.
144626-51090	11	10
158552-51570	11	55
158552-51580	11	59
158552-51670	11	126
158552-51781	11	97
158552-52100	11	103
158552-52310	11	105
158552-52400	11	106
158552-52500	11	104
158552-61900	12	78
158553-51551	11	52
158553-51630	11	70
158553-51640	11	72
158553-51660	11	74
158553-51670	11	64
158553-51680	11	75
158557-51570	11	56
158560-51600	11	69
158560-61050	12	2
158560-61061	12	3
158560-61071	12	4
158560-61430	12	28
158560-61442	12	29
158563-51150	7	18
158563-51281	11	20
		21
158563-51330	11	30
158600-51270	11	19
158601-51550	11	53
158601-51570	11	57
158601-51650	11	73
158601-51770	11	96
158601-51790	11	98
171031-11741	2	41
171051-01921	1	6
171056-49120	9	25
171056-49351	10	35
171064-44510	10	48
22190-080002	9	18
		20
		22
	14	19
	17	25
22190-120002	11	99
		108
		109
22190-160002	12	63
22190-180002	11	100
		110
22190-220002	3	11

Parts No.	Fig. No.	Ref. No.
22190-220002	17	29
22217-180000	7	19
	11	111
22252-000300	8	24
22312-050140	11	112
22351-050010	11	113
22351-060012	1	11
22512-070140	7	8
	8	7
22857-500100	4	62
		63
23065-070225	10	53
23414-080000	10	31
	17	26
23857-030000	9	19
23857-060000	11	114
23875-030000	10	27
23876-020000	4	11
23876-030000	1	12
		13
		14
	4	12
23887-120002	11	101
23887-160002	12	65
24311-000070	2	26
	11	115
	17	22
24311-000120	4	27
		65
	17	23
24311-000160	14	26
24311-000320	2	38
		42
	4	66
	17	24
24321-000650	14	25
24341-000530	8	16
	17	20
24351-030750	2	27
	17	2
24356-010200	11	67
		116
24356-020210	11	117
24372-000150	11	68
25132-004100	10	15
26014-080252	16	29
26106-060102	11	118
	12	66
		67
26106-060122	10	28

Parts No. Index

Parts No.	Fig. No.	Ref. No.
26106-060142	12	79
26106-060162	13	41
26106-060202	10	29
26106-060252	12	80
26106-060302	10	12
26106-060352	11	119
26106-060402	12	81
26106-080122	3	12
	9	11
		21
		23
	10	32
26106-080162	2	28
		29
		36
		45
	4	2
	7	9
	9	24
	11	132
26106-080182	13	42
26106-080202	2	30
26106-080222	11	133
		134
26106-080252	6	10
26106-080302	10	17
	14	3
26106-080352	5	7
26106-080402	2	31
		32
	4	44
26106-080452	2	33
26106-080552	5	3
	7	15
	10	13
	16	30
26106-080602	4	45
		46
	10	33
26106-080852	5	4
26106-081004	16	34
26106-100202	11	135
26116-060102	12	53
26116-120302	15	1
26206-100352	3	2
26206-100702	3	6
26216-100302	2	10
26226-080222	4	43
26306-080002	4	48
	6	5

Parts No.	Fig. No.	Ref. No.
26306-080002	6	8
	16	35
26306-100002	2	34
	16	27
26450-100452	11	122
26756-060002	12	68
26776-180002	7	20
	11	123
27241-300000	1	15
27241-400000	4	13
27310-070001	4	24
729900-02801	1	25
729906-01560	1	1
729906-53100	13	1
729906-92751	17	1
729907-01550	2	1
729932-51330	11	1
977770-1207F	2	37
	3	13
	4	68
	17	31
X2240610100	15	16
X9490561001	16	3

Parts No.	Fig. No.	Ref. No.

Parts No.	Fig. No.	Ref. No.