YANMAR

PARTS CATALOG

0CD50-M00600EN

Last update May., 2020

PREFACE

This parts catalog is the 1st edition of 4TNV94L-SFN2C for FOTON.

Published : June, 2014

Contents

0CD50-M00600

Fig. No.	Fig. Name
ENGINE	
1.	CYLINDER BLOCK
2.	GEAR HOUSING
3.	FLYWHEEL HOUSING & OIL SUMP
4.	CYLINDER HEAD & BONNET
5.	SUCTION MANIFOLD & AIR CLEANER
6.	EXHAUST MANIFOLD
7.	CAMSHAFT & DRIVING GEAR
8.	CRANKSHAFT & PISTON
9.	LUB. OIL SYSTEM
10.	COOLING WATER SYSTEM
11.	FUEL INJECTION PUMP
12.	GOVERNOR
13.	FUEL INJECTION VALVE
14.	FUEL PIPING
15.	STARTER MOTOR
16.	GENERATOR
17.	GASKET SET

Fig.1. CYLINDER BLOCK

(A)=4TNV94L-SFN2C
(B)=
(C)=
(D)=
(E)=
(F)=

No.	Lev.	Parts No.	Description	Q'ty (A)	(B)	(C)	(D)	(E)	(F)	I	R
1	1	729906-01561	BLOCK ASSY, CYLINDER	1							
5	2	129900-01250	PLUG, DISH TYPE 55	1							
6	2	171051-01921	PLUG, NPTF1	1							
7	2	129900-02020	BOLT, METAL CAP	10							
10	2	129900-02410	BUSH, CAMSHAFT	1							
11	2	22351-060012	PIN, SPRING 6.0X12	2							
12	2	23876-030000	PLUG, R03	1							
13	2	23876-030000	PLUG, R03	1							
14	2	23876-030000	PLUG, R03	1							
15	2	27241-300000	PLUG 30	8							
25	2	129900-02931	BEARING ASSY, THRUST	2							
28	1	129900-01200	BOLT, CYLINDER HEAD	18							
29	1	129906-01350	GASKET, HEAD	1							
30	1	129907-01190	SPACER	1							
31	1	729900-02801	BEARING, MAIN	5							1
34	1	129900-02341	BEARING ASSY, MAIN	5							2
37	1	129900-02941	BEARING, THRUST 0.25	2							3

Remarks
(1)Spare parts.
(2)Under-sized(U.S.=0.25) parts.
(3)Over-sized(O.S.=0.25) parts.

N:Old ←Yes/No→ New. Q:Old ←No/Yes→ New, R:Old ←Yes/Yes→ New. S:Old ←No/No→ New. W:Add. Z:Discontinued. F:Interchangeable by set. K:Q'ty Change

Copyright (C) 2014 YANMAR GLOBAL CS CO., LTD. All RightsReserved.

Fig.2. GEAR HOUSING

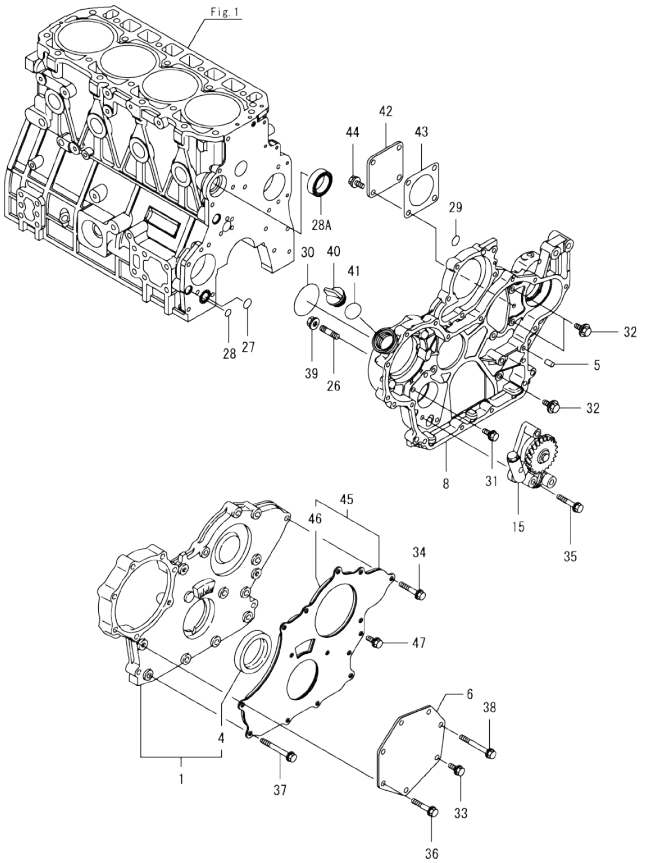

(A)=4TNV94L-SFN2C
(B)=
(C)=
(D)=
(E)=
(F)=

No.	Lev.	Parts No.	Description	Q'ty (A)	(B)	(C)	(D)	(E)	(F)	I	R
1	1	729907-01559	COVER ASSY,GEAR CASE	1							
4	2	129916-01800	SEAL, OIL	1							
5	1	129100-01580	PIN, PARALLEL 8X16	4							
6	1	129951-01740	COVER	1							
8	1	129907-01500	CASE, GEAR	1							
15	1	129900-32001	PUMP ASSY, OIL	1							
26	1	26216-100302	STUD, M10X 30	4							
27	1	129900-32030	O-RING, P20	1							
28	1	129900-32040	O-RING, P14	1							
28A	1	129927-42140	GASKET, PUMP OUTLET	1						W	
	(A=*2014.09)										
29	1	24311-000070	O-RING, 1AP7.0	1							
30	1	24351-030750	O-RING, 1A3075	1							
31	1	26106-080162	BOLT, M8X 16 PLATED	1							
32	1	26106-080202	BOLT, M8X 20 PLATED	3							
33	1	26106-080202	BOLT, M8X 20 PLATED	1							
34	1	26106-080402	BOLT, M8X 40 PLATED	5							
35	1	26106-080452	BOLT, M8X 45 PLATED	3							
36	1	26106-080452	BOLT, M8X 45 PLATED	5							
37	1	26106-080702	BOLT, M8X 70 PLATED	6							
38	1	26106-080752	BOLT, M8X 75 PLATED	1							
39	1	26306-100002	NUT, M10	4							
40	1	124160-01751	CAP, FILLER	1							
41	1	24311-000320	O-RING, 1AP32.0	1							
42	1	124240-01871	COVER, PUMP	1							
43	1	129C26-01890	GASKET, HO-P	1							
44	1	26106-080162	BOLT, M8X 16 PLATED	4							
45	1	129900-01850	COVER ASSY,GEAR CASE	1							
46	2	129900-01870	SPONGE, GEAR CASE	1							
47	1	26106-080162	BOLT, M8X 16 PLATED	3							

N:Old ◄Yes/No► New. Q:Old ◄No/Yes► New. R:Old ◄Yes/Yes► New. S:Old ◄No/No► New. W:Add. Z:Discontinued. F:Interchangeable by set. K:Q'ty Change

Copyright (C) 2014 YANMAR GLOBAL CS CO., LTD. All RightsReserved.

Fig.3. FLYWHEEL HOUSING & OIL SUMP

(A)=4TNV94L-SFN2C
(B)=
(C)=
(D)=
(E)=
(F)=

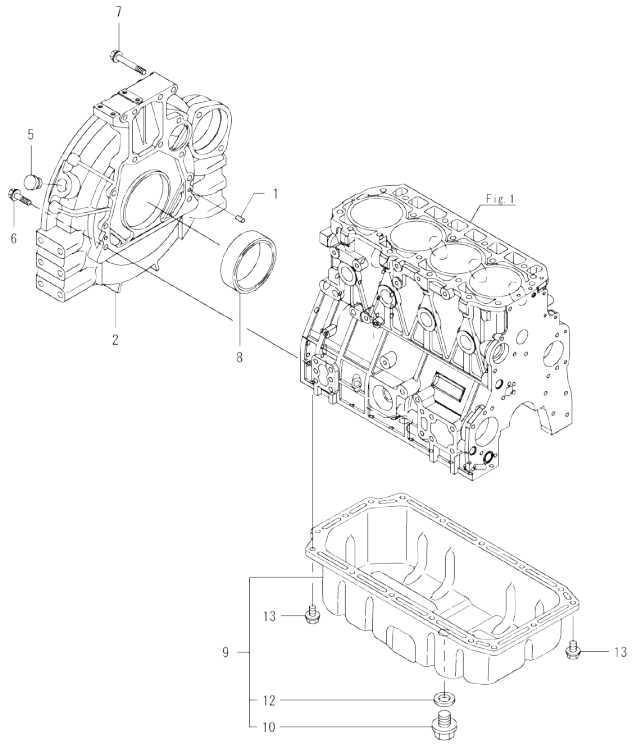

No.	Lev.	Parts No.	Description	Q'ty (A)	(B)	(C)	(D)	(E)	(F)	I	R
1	1	129100-01580	PIN, PARALLEL 8X16	2							
2	1	129900-01620	HOUSING, FLYWHEEL	1							
5	1	119620-01750	CAP	1							
6	1	26206-100352	BOLT, M10X 35 PLATED	9							
7	1	26206-100702	BOLT, M10X 70 PLATED	4							
8	1	129916-01790	SEAL, D115/95XT11	1							
9	1	129916-01710	OIL PAN ASSY	1							
10	2	119640-01640	PLUG, DRAIN M22	1							
12	2	22190-220002	WASHER, SEAL 22	1							
13	1	26106-080122	BOLT, M8X 12 PLATED	16							

N:Old ←Yes/No→ New. Q:Old ←No/Yes→ New. R:Old ←Yes/Yes→ New. S:Old ←No/No→ New. W:Add. Z:Discontinued. F:Interchangeable by set. K:Q'ty Change

Copyright (C) 2014 YANMAR GLOBAL CS CO., LTD. All RightsReserved.

Fig.4. CYLINDER HEAD & BONNET

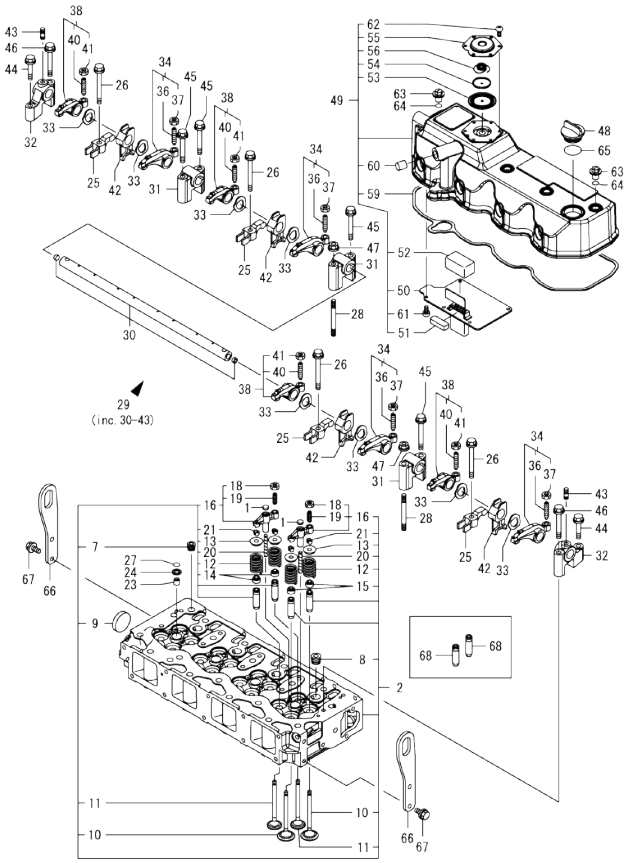

(A)=4TNV94L-SFN2C
(B)=
(C)=
(D)=
(E)=
(F)=

No.	Lev.	Parts No.	Description	Q'ty (A)	(B)	(C)	(D)	(E)	(F)	I	R
1	1	123907-11550	SEAT, VALVE BRIDGE	8							
2	1	129907-11700	HEAD ASSY, CYLINDER	1							
7	2	23876-020000	PLUG, R02	1							
8	2	23876-030000	PLUG, R03	4							
9	2	27241-400000	PLUG, 40	1							
10	2	129907-11100	VALVE, SUCTION	8							
11	2	129907-11110	VALVE, EXHAUST	8							
12	2	129907-11120	SPRING, VALVE	16							
13	2	119620-11180	RETAINER, SPRING	16							
14	2	119803-11340	SEAL, VALVE STEM	8							
15	2	124160-11340	SEAL, VALVE STEM	8							
16	2	129907-11510	BRIDGE ASSY, VALVE	8							
18	3	129150-11750	NUT, M8	8							
19	3	123907-11830	ADJUSTER	8							
20	2	123907-11820	GUIDE, BRIDGE	8							
21	2	27310-070001	COTTER, 7	16							
23	1	119802-11870	PROTECTOR, NOZZLE	4							
24	1	119625-11880	SEAT, NOZZLE	4							
25	1	129907-11910	RETAINER, NOZZLE	4							
26	1	129907-11950	BOLT, M8X75	4							
27	1	24311-000120	O-RING, 1AP12.0	4							
28	1	119593-11301	BOLT, STUD M8X80	2							
29	1	129907-11341	SHAFT ASSY, ROCKER	1							
30	2	129907-11250	SHAFT, ROCKER ARM	1							
31	2	129907-11260	SUPPORT, ROCKER ARM	3							
32	2	129907-11270	SUPPORT, ROCKER ARM	2							
33	2	123907-11280	WASHER	8							
34	2	129907-11650	ARM ASSY, ROCKER	4							
36	3	129150-11230	SCREW, VALVE ADJUST	4							
37	3	129150-11750	NUT, M8	4							
38	2	129907-11660	ARM ASSY, ROCKER	4							
40	3	129150-11230	SCREW, VALVE ADJUST	4							
41	3	129150-11750	NUT, M8	4							
42	2	129907-11920	RETAINER, NOZZLE	4							
43	2	26226-080222	STUD, M8X 22	2							
44	1	26106-080402	BOLT, M8X 40 PLATED	2							
45	1	26106-080602	BOLT, M8X 60 PLATED	4							
46	1	26106-080602	BOLT, M8X 60 PLATED	2							
47	1	26306-080002	NUT, M8	2							
48	1	124160-01751	CAP, FILLER	1							
49	1	129907-11321	BONNET ASSY, HEAD	1							
50	2	129907-03011	PLATE, BAFFLE	1							
51	2	129907-03061	BAFFLE, BREATHER	1							
52	2	129907-03070	BAFFLE, BREATHER	1							
53	2	123907-03100	DIAPHRAGM	1							
54	2	123907-03110	PLATE	1							
55	2	123907-03120	PLATE, BREATHER	1							
56	2	123907-03140	SPRING, DIAPHRAGM	1							
59	2	129933-11310	GASKET, BONNET	1							
60	2	119640-61400	PLUG	1							
61	2	22857-500100	SCREW, 5X10	6							

Remarks
(1)Spare parts.

N:Old ←Yes/No→ New. Q:Old ←No/Yes→ New. R:Old ←Yes/Yes→ New. S:Old ←No/No→ New. W:Add. Z:Discontinued. F:Interchangeable by set. K:Q'ty Change

++ CONTINUE ++

Copyright (C) 2014 YANMAR GLOBAL CS CO., LTD. All RightsReserved.

Fig.4. CYLINDER HEAD & BONNET

(A)=4TNV94L-SFN2C
(B)=
(C)=
(D)=
(E)=
(F)=

No.	Lev.	Parts No.	Description	Q'ty (A)	(B)	(C)	(D)	(E)	(F)	I	R
62	2	22857-500100	SCREW, 5X10	6							
63	1	124160-11360	KNOB	4							
64	1	24311-000120	O-RING, 1AP12.0	4							
65	1	24311-000320	O-RING, 1AP32.0	1							
66	1	129907-07900	LIFTER, ENGINE	2							
67	1	26106-080162	BOLT, M8X 16 PLATED	4							
68	1	129907-11800	GUIDE, VALVE	16							1

Remarks
(1)Spare parts.

N:Old ←Yes/No→ New. Q:Old ←No/Yes→ New. R:Old ←Yes/Yes→ New. S:Old ←No/No→ New. W:Add. Z:Discontinued. F:Interchangeable by set. K:Q'ty Change

Copyright (C) 2014 YANMAR GLOBAL CS CO., LTD. All RightsReserved.

Fig.5. SUCTION MANIFOLD & AIR CLEANER

(A)=4TNV94L-SFN2C
(B)=
(C)=
(D)=
(E)=
(F)=

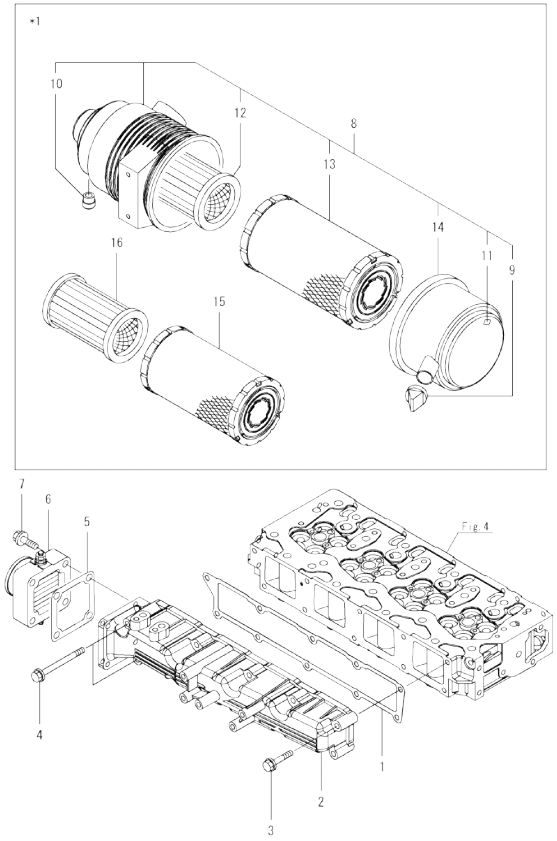

No.	Lev.	Parts No.	Description	Q'ty (A)	(B)	(C)	(D)	(E)	(F)	I	R
1	1	129907-12110	GASKET, MANIFOLD	1							
2	1	129944-12111	MANIFOLD, AIR INTAKE	1							
3	1	26106-080452	BOLT, M8X 45 PLATED	8							
4	1	26106-080802	BOLT, M8X 80 PLATED	2							
5	1	121850-77021	GASKET, AIR HEATER	1							
6	1	129915-77051	HEATER, AIR 12V	1							
7	1	26106-080352	BOLT, M8X 35 PLATED	4							
8	1	129944-12500	AIR CLEANER ASSY	1							
9	2	119808-12540	VALVE, UNLOAD	1							
10	2	119140-12680	INDICATOR, CLEANER	1							
11	2	129612-12650	LABEL, MARKING	1							
12	2	119005-12571	ELEMENT, INNER	1							
13	2	129062-12560	ELEMENT	1							
14	2	129900-12530	COVER ASSY	1							
15	1	129906-12520	ELEMENT, AIR CLEANER	1							
16	1	119005-12571	ELEMENT, INNER	1							

Remarks
*1. Loose parts.

N:Old $\frac{\text{Yes}}{\text{No}}$ New. Q:Old $\frac{\text{No}}{\text{Yes}}$ New. R:Old $\frac{\text{Yes}}{\text{Yes}}$ New. S:Old $\frac{\text{No}}{\text{No}}$ New. W:Add. Z:Discontinued. F:Interchangeable by set. K:Q'ty Change

Copyright (C) 2014 YANMAR GLOBAL CS CO., LTD. All RightsReserved.

Fig.6. EXHAUST MANIFOLD

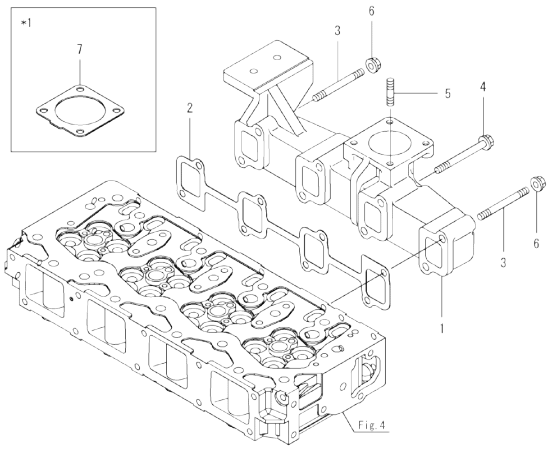

Remarks
*1. Loose parts.

(A)=4TNV94L-SFN2C
(B)=
(C)=
(D)=
(E)=
(F)=

No.	Lev.	Parts No.	Description	Q'ty (A)	(B)	(C)	(D)	(E)	(F)	I	R
1	1	129907-13201	MANIFOLD, EXHAUST	1							
2	1	129900-13251	GASKET, EXH.MANIFOLD	1							
3	1	123900-13610	BOLT, STUD M8X80	2							
4	1	123900-13630	BOLT, M8X80	6							
5	1	119131-18320	BOLT, STUD M8X22	4							
6	1	26306-080002	NUT, M8	2							
7	1	129930-13201	GASKET, SILENCER	2							

N:Old ◄Yes/No► New. Q:Old ◄No/Yes► New. R:Old ◄Yes/Yes► New. S:Old ◄No/No► New. W:Add. Z:Discontinued. F:Interchangeable by set. K:Q'ty Change

Copyright (C) 2014 YANMAR GLOBAL CS CO., LTD. All RightsReserved.

Fig.7. CAMSHAFT & DRIVING GEAR

(A)=4TNV94L-SFN2C
(B)=
(C)=
(D)=
(E)=
(F)=

No.	Lev.	Parts No.	Description	Q'ty (A)	(B)	(C)	(D)	(E)	(F)	I	R
1	1	129150-14200	TAPPET	8							
2	1	129907-14400	PUSH-ROD	8							
3	1	129908-14581	CAMSHAFT ASSY	1							
4	2	129150-02450	BEARING, THRUST	1							
7	2	129900-14100	GEAR, CAMSHAFT	1							
8	2	22512-070140	KEY, 7X 14	1							
9	1	26106-080142	BOLT, M8X 14 PLATED	2							
10	1	123900-25060	SHAFT, IDLE GEAR	1							
11	1	129900-25100	GEAR ASSY, IDLE	1							
14	1	26106-080552	BOLT, M8X 55 PLATED	3							
15	1	129953-25300	BOLT	4							
16	1	129907-25900	GEAR, PUMP	1							
17	1	129150-25920	BUSH, IDLE GEAR	1							1
18	1	158563-51150	FLANGE	1							

Remarks
(1)Spare parts.

N:Old ←Yes/No→ New. Q:Old ←No/Yes→ New. R:Old ←Yes/Yes→ New. S:Old ←No/No→ New. W:Add. Z:Discontinued. F:Interchangeable by set. K:Q'ty Change

Copyright (C) 2014 YANMAR GLOBAL CS CO., LTD. All RightsReserved.

Fig.8. CRANKSHAFT & PISTON

(A)=4TNV94L-SFN2C
(B)=
(C)=
(D)=
(E)=
(F)=

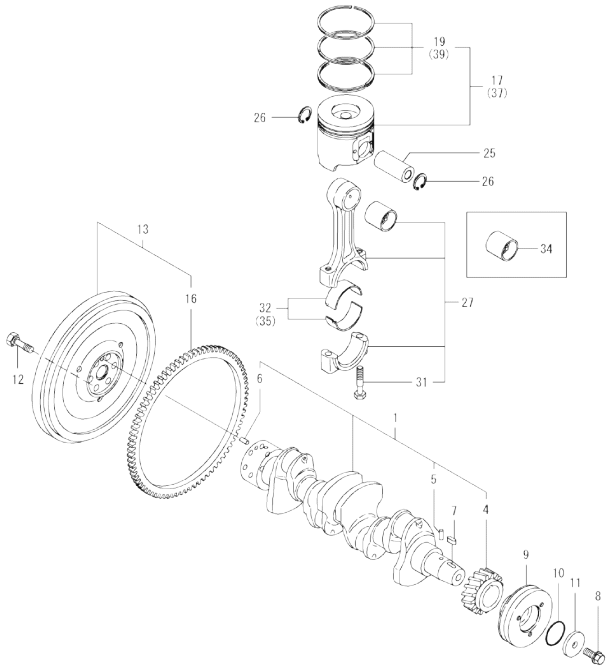

No.	Lev.	Parts No.	Description	Q'ty (A)	(B)	(C)	(D)	(E)	(F)	I	R
1	1	129902-21000	CRANKSHAFT ASSY	1							
4	2	129900-21200	GEAR, CRANKSHAFT	1							
5	2	121850-21290	PIN	1							
6	2	121850-21920	PIN, PARALLEL 10X22	1							
7	1	22512-070140	KEY, 7X 14	1							
8	1	129916-21610	BOLT	1							
9	1	129907-21650	V-PULLEY, CRANK 130	1							
10	1	129960-21930	GASKET, WASHER	1							
11	1	129960-21940	WASHER, V-PULLEY	1							
12	1	121850-21130	BOLT, FLYWHEEL	6							
13	1	129916-21590	FLYWHEEL ASSY	1							
16	2	129900-21600	GEAR, RING	1							
17	1	129986-22080	PISTON ASSY	4							
19	2	129986-22050	RING ASSY, PISTON	4							
25	1	120130-22301	PIN, PISTON	4							
26	1	22252-000300	RING, 30	8							
27	1	129900-23001	ROD ASSY, CONNECTING	4							
31	2	129900-23200	BOLT, CONNECTING ROD	8							
32	1	129900-23601	BEARING, CRANK PIN	4							
34	1	129900-23911	BEARING, PISTON PIN	4							1
35	1	129900-23611	BEARING ASSY, 0.25US	4							2
37	1	129906-22910	PISTON ASSY, 0.25 OS	4							3
39	2	129916-22950	RING SET, 0.25 OS	4							3

Remarks
(1)Spare parts.
(2)Under-sized(U.S.=0.25) parts.
(3)Over-sized(O.S.=0.25) parts.

N:Old ←Yes/No→ New. Q:Old ←No/Yes→ New, R:Old ←Yes/Yes→ New, S:Old ←No/No→ New, W:Add, Z:Discontinued, F:Interchangeable by set, K:Q'ty Change

Copyright (C) 2014 YANMAR GLOBAL CS CO., LTD. All RightsReserved.

Fig.9. LUB. OIL SYSTEM

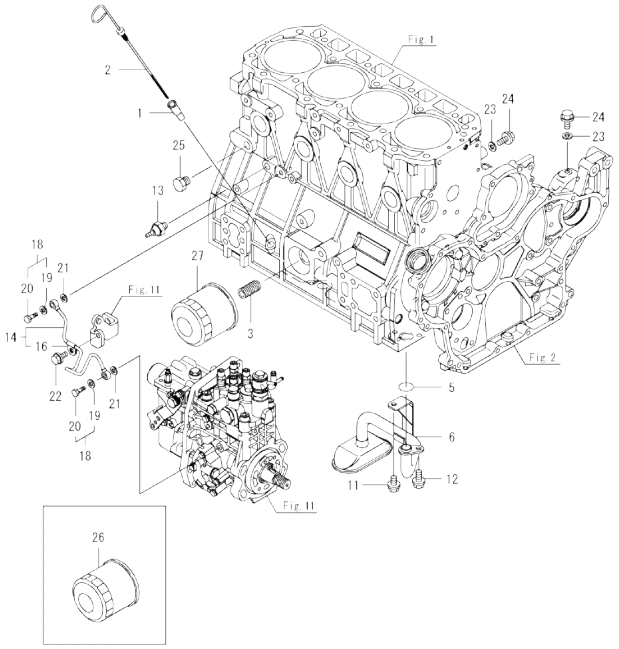

(A)=4TNV94L-SFN2C
(B)=
(C)=
(D)=
(E)=
(F)=

No.	Lev.	Parts No.	Description	Q'ty (A)	(B)	(C)	(D)	(E)	(F)	I	R
1	1	121520-34810	GUIDE, DIPSTICK	1							
2	1	129906-34851	DIPSTICK	1							
3	1	119000-35140	BOLT, STUD FILTER	1							
5	1	129900-32030	O-RING, P20	1							
6	1	129953-35000	PIPE ASSY, OIL INLET	1							
11	1	26106-080122	BOLT, M8X 12 PLATED	1							
12	1	26106-080162	BOLT, M8X 16 PLATED	1							
13	1	114250-39450	SWITCH, HYDRAULIC	1							
14	1	129907-39061	PIPE ASSY, OIL	1							
16	2	123907-39500	RETAINER, PIPE	1							
18	1	129005-59830	BOLT ASSY, JOINT M8	2							
19	2	22190-080002	WASHER, SEAL 8	2							
20	2	23857-030000	BOLT, JOINT 3	2							
21	1	22190-080002	WASHER, SEAL 8	2							
22	1	26106-080122	BOLT, M8X 12 PLATED	1							
23	1	22190-080002	WASHER, SEAL 8	2							
24	1	26106-080122	BOLT, M8X 12 PLATED	2							
25	1	171056-49120	PLUG, DRAIN R1/4	1							
26	1	119005-35151	FILTER, D80X100	1							1
27	1	119005-35151	FILTER, D80X100	1							2

Remarks
(1)Loose parts.
(2)Spare parts.

N:Old ←Yes/No→ New. Q:Old ←No/Yes→ New, R:Old ←Yes/Yes→ New. S:Old ←No/No→ New. W:Add. Z:Discontinued. F:Interchangeable by set. K:Q`ty Change

Copyright (C) 2014 YANMAR GLOBAL CS CO., LTD. All RightsReserved.

Fig.10. COOLING WATER SYSTEM

(A)=4TNV94L-SFN2C
(B)=
(C)=
(D)=
(E)=
(F)=

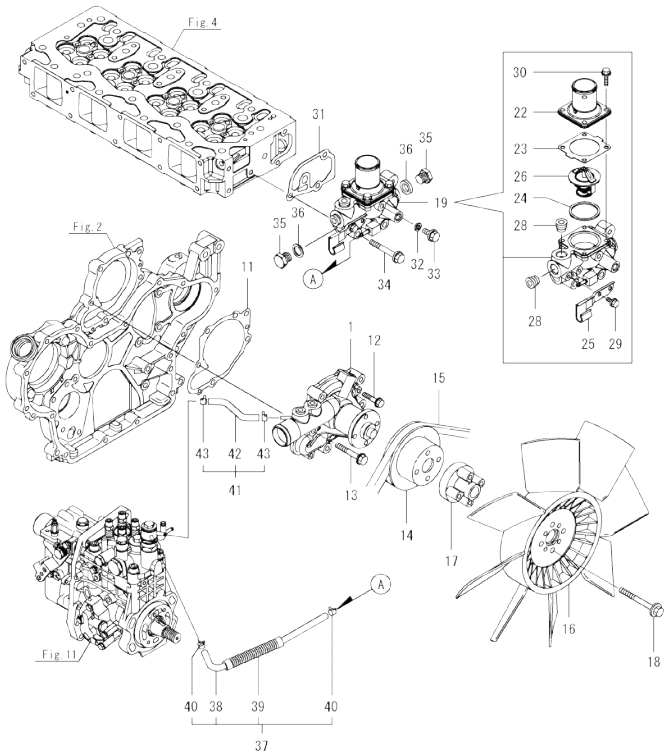

No.	Lev.	Parts No.	Description	Q'ty (A)	(B)	(C)	(D)	(E)	(F)	I	R
1	1	129907-42002	PUMP ASSY, CW LOW	1							
11	1	129900-42020	GASKET, WATER PUMP	1							
12	1	26106-060302	BOLT, M6X 30 PLATED	2							
13	1	26106-080552	BOLT, M8X 55 PLATED	5							
14	1	129900-42462	V-PULLEY, PUMP	1							
15	1	25152-004100	V-BELT, A41	1							
16	1	129953-44710	FAN, COOLING D=460	1							
17	1	119117-44760	SPACER, FAN	1							
18	1	26106-080802	BOLT, M8X 80 PLATED	4							
19	1	129907-49800	CASE ASSY,THERMOSTAT	1							
22	2	129916-49530	COVER, THERMOSTAT	1							
23	2	121850-49540	GASKET, THERMOSTAT	1							
24	2	121850-49550	GASKET, THERMOSTAT	1							
25	2	129907-49730	RETAINER, PIPE	1							
26	2	121850-49811	THERMOSTAT, 71C	1							
28	2	23875-030000	PLUG, R03	2							
29	2	26106-060122	BOLT, M6X 12 PLATED	1							
30	2	26106-060202	BOLT, M6X 20 PLATED	4							
31	1	129900-49870	GASKET, THERMOSTAT	1							
32	1	23414-080000	GASKET, 8X1.0	1							
33	1	26106-080122	BOLT, M8X 12 PLATED	1							
34	1	26106-080602	BOLT, M8X 60 PLATED	3							
35	1	121450-42450	PLUG, M16	2							
36	1	124465-44950	GASKET, 16	2							
37	1	129907-49610	HOSE ASSY, WATER	1							
38	2	129907-49710	HOSE, WATER	1							
39	2	129907-49750	TUBE, CORRUGATED	1							
40	2	124722-59050	CLAMP, HOSE 9	2							
41	1	129907-49620	HOSE ASSY, WATER	1							
42	2	129907-49720	HOSE, WATER	1							
43	2	124722-59050	CLAMP, HOSE 9	2							

N:Old ◄Yes/No► New. Q:Old ◄No/Yes► New. R:Old ◄Yes/Yes► New. S:Old ◄No/No► New. W:Add. Z:Discontinued. F:Interchangeable by set. K:Q'ty Change

Copyright (C) 2014 YANMAR GLOBAL CS CO., LTD. All RightsReserved.

Fig.11. FUEL INJECTION PUMP

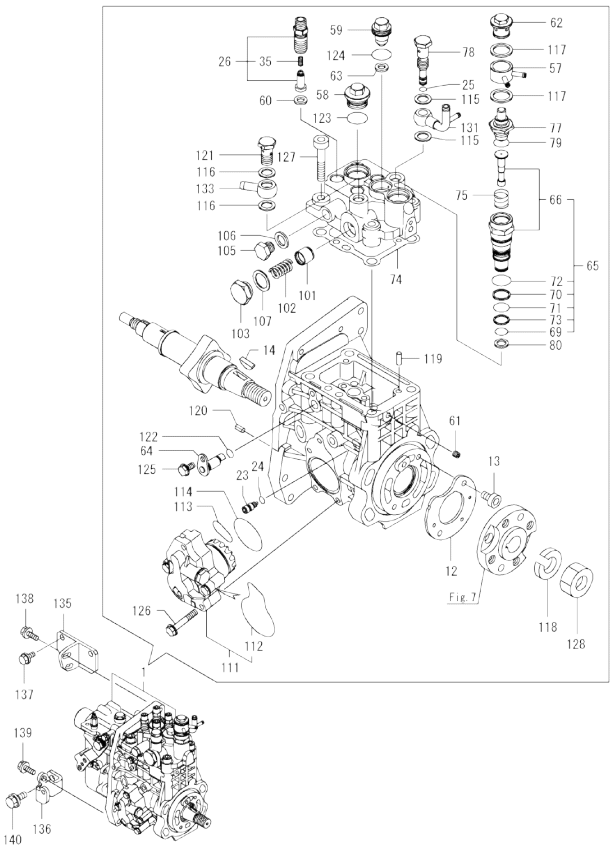

Remarks
(1)Governor(Fig.12) is incorporated in this Fuel Injection Pump(No.1).

(A)=4TNV94L-SFN2C
(B)=
(C)=
(D)=
(E)=
(F)=

No.	Lev.	Parts No.	Description	Q'ty (A)	(B)	(C)	(D)	(E)	(F)	I	R
1	1	729932-51360	FIE ASSY	1							
12	2	129928-51900	COVER	1							
13	2	129008-51920	BOLT, SOCKET M6X10	2							
14	2	144626-51090	FEATHER KEY, 5X19	1							
23	2	158600-51270	STOPPER, TAPPET	1							
24	2	158563-51281	O-RING, 4D S6	1							
25	2	158563-51281	O-RING, 4D S6	1							
26	2	129509-51390	VALVE ASSY, DELIVERY	4							
35	3	158563-51330	SPRING, DELIVERY	4							
57	2	158553-51551	JOINT, COOLING WATER	1							
58	2	158601-51550	PLUG, M22	1							
59	2	129907-51560	PLUG, M16	1							
60	2	158552-51571	GASKET, PLUG	4							
61	2	158557-51570	PLUG, RACK	1							
62	2	158601-51570	PLUG	1							
63	2	129906-51580	GASKET, PLUG	1							
64	2	158552-51580	LIFTER, LINK	1							
65	2	119802-51590	TIMER ASSY	1							
66	3	119802-51600	TIMER ASSY	1							
69	3	158553-51670	O-RING	1							
70	3	119802-51680	RING, BACKUP	1							
71	3	119802-51690	O-RING	1							
72	3	24356-190200	O-RING, 4D19020	1							
73	3	24372-000150	RING, BACK UP T2P15	1							
74	2	158560-51600	GASKET	1							
75	2	158553-51630	SPRING, TIMER	1							
77	2	158553-51640	THERMOELEMENT	1							
78	2	158601-51650	JOINT, OVER FLOW	1							
79	2	158553-51660	O-RING, P14	1							
80	2	158553-51680	GASKET, TIMER	1							
101	2	158601-51770	PISTON, ACCUMLATOR	1							
102	2	158552-51781	SPRING, ACCUMULATOR	1							
103	2	158601-51790	PLUG	1							
105	2	158553-51930	PLUG, M12	1							
106	2	22190-120002	WASHER, SEAL 12	1							
107	2	22190-180002	WASHER, SEAL 18	1							
111	2	158552-52100	PUMP ASSY, FUEL FEED	1							
112	3	158552-52500	O-RING	1							
113	2	158552-52311	O-RING	1							
114	2	158552-52400	O-RING, 4E S42	1							
115	2	22190-120002	WASHER, SEAL 12	2							
116	2	22190-120002	WASHER, SEAL 12	2							
117	2	22190-180002	WASHER, SEAL 18	2							
118	2	22217-180000	WASHER, SPRING 18	1							
119	2	22312-050140	PIN, PARALLEL 5X14	2							
120	2	22351-050010	PIN, SPRING 5.0X10	2							
121	2	23857-060000	BOLT, JOINT 6	1							
122	2	24311-000070	O-RING, 1AP7.0	1							
123	2	24356-190200	O-RING, 4D19020	1							
124	2	24356-240210	O-RING, 4D24021	1							
125	2	26106-060102	BOLT, M6X 10 PLATED	1							

N:Old ←Yes/No→ New. Q:Old ←No/Yes→ New. R:Old ←Yes/Yes→ New. S:Old ←No/No→ New. W:Add. Z:Discontinued. F:Interchangeable by set. K:Q'ty Change

++ CONTINUE ++

Copyright (C) 2014 YANMAR GLOBAL CS CO., LTD. All RightsReserved.

Fig.11. FUEL INJECTION PUMP

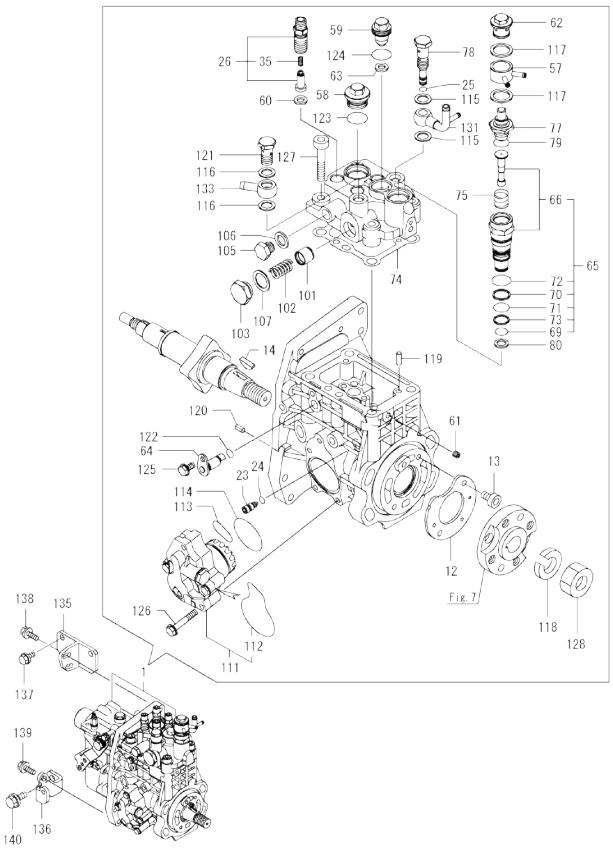

(A)=4TNV94L-SFN2C
(B)=
(C)=
(D)=
(E)=
(F)=

No.	Lev.	Parts No.	Description	Q'ty (A)	(B)	(C)	(D)	(E)	(F)	I	R
126	2	26106-060352	BOLT, M6X 35 PLATED	4							
127	2	26450-100452	BOLT, M10X 45	4							
128	2	26776-180002	NUT, LOCK M18	1							
131	2	158552-51670	JOINT, OVER FLOW	1							
133	2	129916-59020	JOINT, PIPE 12	1							
135	1	129907-01950	RETAINER, PUMP	1							
136	1	129907-01960	RETAINER, PUMP	1							
137	1	26106-080162	BOLT, M8X 16 PLATED	2							
138	1	26106-080222	BOLT, M8X 22 PLATED	2							
139	1	26106-080222	BOLT, M8X 22 PLATED	1							
140	1	26106-100202	BOLT, M10X 20 PLATED	1							

Remarks
(1)Governor(Fig.12) is incorporated in this Fuel Injection Pump(No.1).

N:Old ←Yes/No→ New. Q:Old ←No/Yes→ New. R:Old ←Yes/Yes→ New. S:Old ←No/No→ New. W:Add. Z:Discontinued. F:Interchangeable by set. K:Q'ty Change

Copyright (C) 2014 YANMAR GLOBAL CS CO., LTD. All RightsReserved.

Fig.12. GOVERNOR

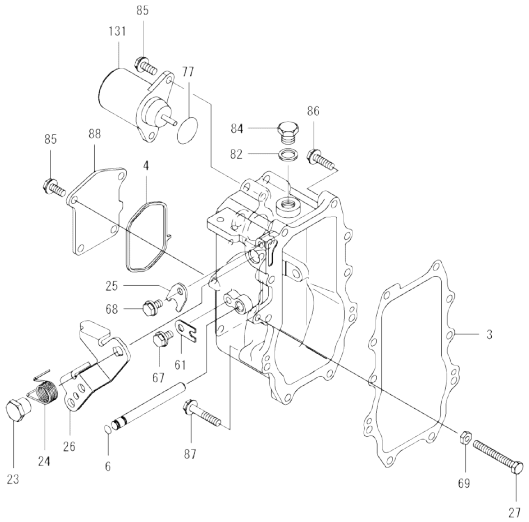

(A)=4TNV94L-SFN2C
(B)=
(C)=
(D)=
(E)=
(F)=

No.	Lev.	Parts No.	Description	Q'ty (A)	(B)	(C)	(D)	(E)	(F)	I	R
3	2	158560-61050	GASKET	1							
4	2	158560-61071	GASKET	1							
6	2	129155-51280	O-RING, S6	1							
23	2	129255-61410	NUT, M8	1							
24	2	119807-61420	SPRING, RETURN	1							
25	2	158560-61430	STOPPER, SHAFT	1							
26	2	158560-61442	LEVER, REGULATOR	1							
27	2	129155-61460	BOLT, LIMITING	1							
61	2	119660-61901	STOPPER, SHAFT	1							
67	2	26106-060102	BOLT, M6X 10 PLATED	1							
68	2	26106-060102	BOLT, M6X 10 PLATED	1							
69	2	26756-060002	NUT, LOCK M6	1							
77	2	158552-61900	O-RING	1							
82	2	22190-160002	WASHER, SEAL 16	1							
84	2	23887-160002	PLUG, 16	1							
85	2	26106-060142	BOLT, M6X 14 PLATED	6							
86	2	26106-060252	BOLT, M6X 25 PLATED	8							
87	2	26106-060402	BOLT, M6X 40 PLATED	2							
88	2	158560-61061	COVER, GOVERNOR CASE	1							
131	2	119653-77950	SOLENOID, STOP	1							

Remarks
* This figure(Governor) is incorporated in the Fuel Injection Pump(Fig.11).

N:Old ◄Yes/No► New. Q:Old ◄No/Yes► New, R:Old ◄Yes/Yes► New, S:Old ◄No/No► New. W:Add. Z:Discontinued. F:Interchangeable by set. K:Q'ty Change

Copyright (C) 2014 YANMAR GLOBAL CS CO., LTD. All RightsReserved.

Fig.13. FUEL INJECTION VALVE

(A)=4TNV94L-SFN2C
(B)=
(C)=
(D)=
(E)=
(F)=

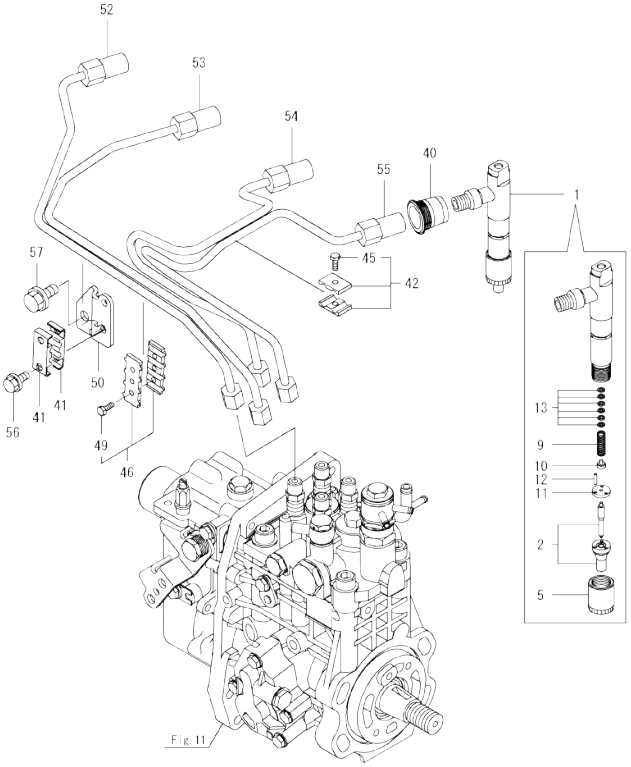

No.	Lev.	Parts No.	Description	Q'ty (A)	(B)	(C)	(D)	(E)	(F)	I	R
1	1	729906-53100	FUEL INJECTOR ASSY	4							
2	2	129906-53000	NOZZLE ASSY, F.I.	4							
5	2	114250-53080	NUT, NOZZLE	4							
9	2	114250-53120	SPRING, NOZZLE	4							
10	2	114250-53130	SEAT, SPRING	4							
11	2	114250-53140	SPACER	4							
12	2	114250-53210	PIN	8							
13	2	119803-53400	SHIM SET	4							
40	1	123907-11601	SEAL, PIPE	4							
41	1	122780-59100	RETAINER	2							
42	1	119305-59120	RETAINER, PIPE	1							
45	2	129150-59131	BOLT, M4X14	1							
46	1	129550-59120	RETAINER, PIPE	1							
49	2	129150-59131	BOLT, M4X14	2							
50	1	129907-59710	SUPPORT	1							
52	1	129907-59810	PIPE ASSY, INJECTION	1							
53	1	129907-59820	PIPE ASSY, INJECTION	1							
54	1	129907-59830	PIPE ASSY, INJECTION	1							
55	1	129907-59840	PIPE ASSY, INJECTION	1							
56	1	26106-060162	BOLT, M6X 16 PLATED	2							
57	1	26106-080182	BOLT, M8X 18 PLATED	1							

N:Old ◄Yes/No► New. Q:Old ◄No/Yes► New. R:Old ◄Yes/Yes► New. S:Old ◄No/No► New. W:Add. Z:Discontinued. F:Interchangeable by set. K:Q'ty Change

Copyright (C) 2014 YANMAR GLOBAL CS CO., LTD. All RightsReserved.

Fig.14. FUEL PIPING

(A)=4TNV94L-SFN2C
(B)=
(C)=
(D)=
(E)=
(F)=

No.	Lev.	Parts No.	Description	Q'ty (A)	(B)	(C)	(D)	(E)	(F)	I	R
1	1	129004-55612	BRACKET, FILTER	1							
2	1	129907-55801	FILTER, FUEL	1							
3	1	26106-080302	BOLT, M8X 30 PLATED	2							
4	1	129457-59010	HOSE ASSY, FUEL	1							
5	2	124766-59050	CLAMP, HOSE 11.5	2							
6	2	129957-59120	TUBE, CORRUGATED 15	1							
7	2	105025-59750	HOSE, FUEL	1							
8	1	129981-59010	HOSE ASSY, FUEL	1							
9	2	124766-59050	CLAMP, HOSE 11.5	2							
10	2	129950-59221	TUBE, CORRUGATED 15	1							
11	2	129980-59510	HOSE, FUEL	1							
12	1	121750-59890	BAND, NYLON	1							
13	1	129907-59140	PIPE ASSY, RETURN	1							
14	1	123907-59540	BOLT, PIPE JOINT M6	5							
15	1	123907-59550	GASKET	5							
16	1	129486-59551	HOSE ASSY, RETURN	1							
17	2	124722-59050	CLAMP, HOSE 9	2							
19	1	123907-59560	JOINT, HOSE	1							
20	1	22190-080002	WASHER, SEAL 8	1							
21	1	119225-52102	PUMP, FUEL FEED	1							
22	1	119802-55700	SEPARATOR ASSY,WATER	1							
23	2	129100-55690	RING, CUP RETAINING	1							
24	2	119802-55710	ELEMENT	1							
25	2	119802-55730	CUP ASSY, SEPARATOR	1							
26	2	24311-000160	O-RING, 1AP16.0	1							
27	2	24321-000650	O-RING, 1AG65.0	1							
28	1	129907-55801	FILTER, FUEL	1							

Remarks
*1. Loose parts.

N:Old $\xleftarrow[\text{No}]{\text{Yes}}$ New. Q:Old $\xleftarrow[\text{Yes}]{\text{No}}$ New, R:Old $\xleftarrow[\text{Yes}]{\text{Yes}}$ New. S:Old $\xleftarrow[\text{No}]{\text{No}}$ New. W:Add. Z:Discontinued. F:Interchangeable by set. K:Q'ty Change

Copyright (C) 2014 YANMAR GLOBAL CS CO., LTD. All RightsReserved.

Fig.15. STARTER MOTOR

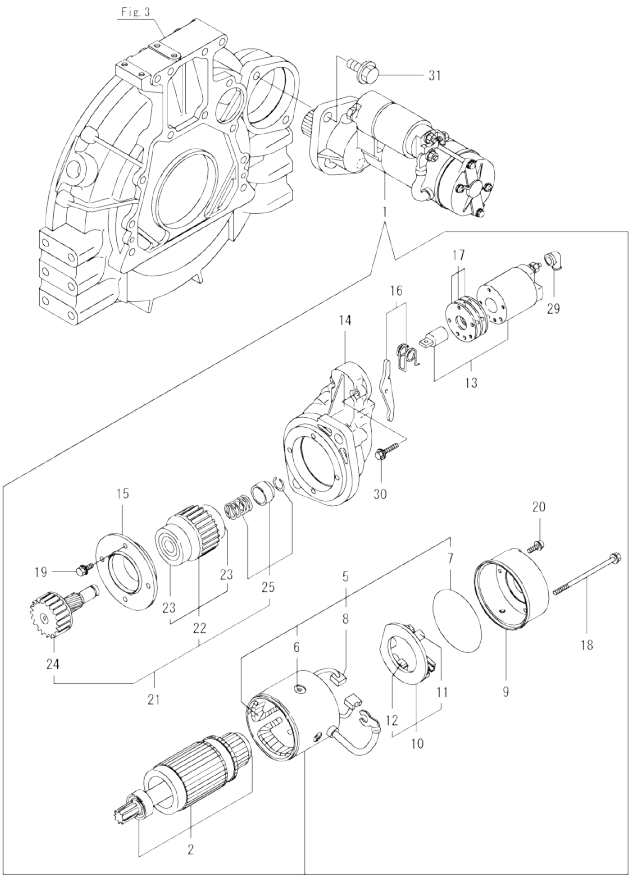

(A)=4TNV94L-SFN2C (D)=
(B)= (E)=
(C)= (F)=

No.	Lev.	Parts No.	Description	Q'ty (A)	(B)	(C)	(D)	(E)	(F)	I	R
1	1	129940-77011	STARTER ASSY	1							
2	2	129940-77100	ARMATURE ASSY	1							
5	2	129940-77130	COIL ASSY, FIELD	1							
6	3	129940-77140	SCREW, CORE SET	4							
7	3	129940-77150	O-RING	1							
8	3	129940-77160	BRUSH	2							
9	2	129940-77171	COVER	1							
10	2	129940-77181	HOLDER ASSY, BRUSH	1							
11	3	129940-77190	SPRING, BRUSH	1							
12	3	129940-77200	BRUSH	2							
13	2	129940-77210	SWITCH ASSY, MAGNET	1							
14	2	129940-77221	CASE, GEAR	1							
15	2	129940-77230	RETAINER, BEARING	1							
16	2	129940-77240	LEVER SET	1							
17	2	129940-77250	COVER KIT, DUST	1							
18	2	129940-77260	BOLT, THROUGH	2							
19	2	129940-77270	BOLT	4							
20	2	129940-77280	SCREW	2							
21	2	123900-77510	PINION ASSY	1							
22	3	123900-77520	CLUTCH ASSY	1							
23	4	X2240610100	BEARING, BALL	2							
24	3	123900-77540	SHAFT, PINION	1							
25	3	119131-77550	STOPPER SET, PINION	1							
29	2	121254-77810	COVER, TERMINAL	1							
30	2	114371-79070	BOLT	2							
31	1	26106-120252	BOLT, M12X 25 PLATED	2							

N:Old ←Yes/No→ New. Q:Old ←No/Yes→ New. R:Old ←Yes/Yes→ New. S:Old ←No/No→ New. W:Add. Z:Discontinued. F:Interchangeable by set. K:Q'ty Change

Copyright (C) 2014 YANMAR GLOBAL CS CO., LTD. All RightsReserved.

Fig.16. GENERATOR

(A)=4TNV94L-SFN2C
(B)=
(C)=
(D)=
(E)=
(F)=

No.	Lev.	Parts No.	Description	Q'ty (A)	(B)	(C)	(D)	(E)	(F)	I	R
1	1	129795-01900	BOLT, STUD M10X33	1							
2	1	129423-77200	GENERATOR ASSY, 40A	1							
3	2	X9490561001	NUT	1							
4	2	119620-77380	ROTOR ASSY	1							
5	3	123501-79240	BEARING, BALL	1							
6	3	119620-79250	COVER, BEARING	1							
7	2	119620-77421	FRAME ASSY,GENERATOR	1							
8	3	119620-79200	BEARING, BALL	1							
9	3	119620-79210	RETAINER	1							
10	3	119620-79220	SCREW	4							
11	3	119620-79230	BOLT, STUD	2							
12	2	119620-77440	FRAME ASSY	1							
13	2	119620-77461	PULLEY, GENERATOR	1							
14	2	119620-77471	NUT	1							
15	2	119620-77490	COLLAR	1							
16	2	129423-77710	REGULATOR ASSY	1							
17	2	119620-79260	HOLDER	1							
18	2	129052-79270	HOLDER, BRUSH	1							
19	3	119620-77480	BRUSH	2							
20	3	119620-79280	SPRING	2							
21	2	119620-79290	SCREW	6							
22	2	119620-79300	SCREW	1							
23	2	129240-79300	COVER	1							
24	2	119620-79310	BOLT	3							
25	2	119620-79320	SCREW	2							
26	2	119620-79330	BOLT	2							
27	2	119620-79340	BUSH, INSULATION	1							
28	2	119620-79350	NUT	2							
29	2	119620-79360	WASHER, THRUST	1							
30	1	26306-100002	NUT, M10	1							
31	1	129900-77330	ADJUSTER, BELT	1							
32	1	119810-77340	BOLT, ADJUST L=30	1							
33	1	26014-080252	BOLT, M8X 25	1							
34	1	119643-66900	DIODE	1							
35	1	119650-77911	RELAY ASSY, GLOW	1							
38	1	128300-77920	TIMER	1							
39	1	129211-77920	TIMER	1							

Remarks
*1. Loose parts.

N:Old ◄Yes/No► New. Q:Old ◄No/Yes► New. R:Old ◄Yes/Yes► New. S:Old ◄No/No► New. W:Add. Z:Discontinued. F:Interchangeable by set. K:Q'ty Change

Copyright (C) 2014 YANMAR GLOBAL CS CO., LTD. All RightsReserved.

Fig.17. GASKET SET

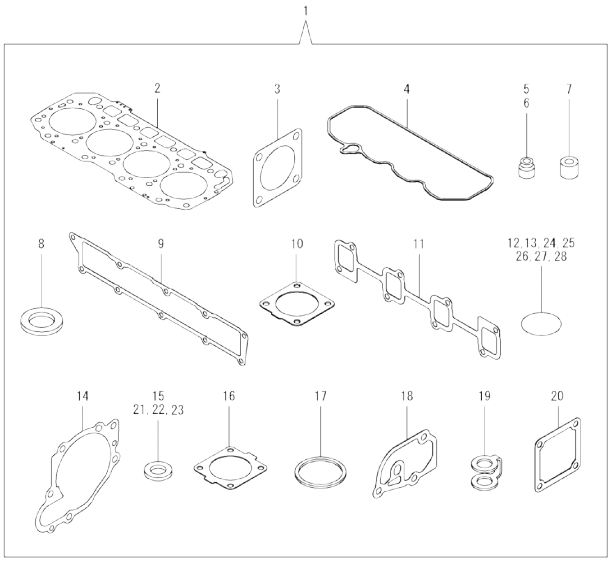

(A)=4TNV94L-SFN2C
(B)=
(C)=
(D)=
(E)=
(F)=

No.	Lev.	Parts No.	Description	Q'ty (A)	(B)	(C)	(D)	(E)	(F)	I	R
1	1	129932-92740	GASKET SET	1							1
2	2	129906-01350	GASKET, HEAD	1							
3	2	124240-01883	GASKET	1							
4	2	129933-11310	GASKET, BONNET	1							
5	2	119803-11340	SEAL, VALVE STEM	8							
6	2	124160-11340	SEAL, VALVE STEM	8							
7	2	119802-11870	PROTECTOR, NOZZLE	4							
8	2	119625-11880	SEAT, NOZZLE	4							
9	2	129907-12110	GASKET, MANIFOLD	1							
10	2	129930-13201	GASKET, SILENCER	1							
11	2	129900-13251	GASKET, EXH.MANIFOLD	1							
12	2	129900-32030	O-RING, P20	2							
13	2	129900-32040	O-RING, P14	1							
14	2	129900-42020	GASKET, WATER PUMP	1							
15	2	124465-44950	GASKET, 16	2							
16	2	121850-49540	GASKET, THERMOSTAT	1							
17	2	121850-49550	GASKET, THERMOSTAT	1							
18	2	129900-49870	GASKET, THERMOSTAT	1							
19	2	123907-59550	GASKET	5							
20	2	121850-77021	GASKET, AIR HEATER	1							
21	2	22190-080002	WASHER, SEAL 6	7							
22	2	22190-220002	WASHER, SEAL 22	1							
23	2	23414-080000	GASKET, 8X1.0	1							
24	2	24311-000070	O-RING, 1AP7.0	1							
25	2	24311-000120	O-RING, 1AP12.0	8							
26	2	24311-000320	O-RING, 1AP32.0	2							
27	2	24341-000530	O-RING, 1AS53.0	1							
28	2	24351-030750	O-RING, 1A3075	1							

Remarks
(1)Optional parts.

N:Old $\xleftarrow[\text{No}]{\text{Yes}}$ New. Q:Old $\xleftarrow[\text{Yes}]{\text{No}}$ New. R:Old $\xleftarrow[\text{Yes}]{\text{Yes}}$ New. S:Old $\xleftarrow[\text{No}]{\text{No}}$ New. W:Add. Z:Discontinued. F:Interchangeable by set. K:Q'ty Change

Copyright (C) 2014 YANMAR GLOBAL CS CO., LTD. All RightsReserved.

Parts No. Index

Parts No.	Fig. No.	Ref. No.
105025-59750	14	7
114250-39450	9	13
114250-53080	13	5
114250-53120	13	9
114250-53130	13	10
114250-53140	13	11
114250-53210	13	12
114371-79070	15	30
119000-35140	9	3
119005-12571	5	12
		16
119005-35151	9	26
		27
119117-44760	10	17
119131-18320	6	5
119131-77550	15	25
119140-12680	5	10
119225-52102	14	21
119305-59120	13	42
119593-11301	4	28
119620-01750	3	5
119620-11180	4	13
119620-77380	16	4
119620-77421	16	7
119620-77440	16	12
119620-77461	16	13
119620-77471	16	14
119620-77480	16	19
119620-77490	16	15
119620-79200	16	8
119620-79210	16	9
119620-79220	16	10
119620-79230	16	11
119620-79250	16	6
119620-79260	16	17
119620-79280	16	20
119620-79290	16	21
119620-79300	16	22
119620-79310	16	24
119620-79320	16	25
119620-79330	16	26
119620-79340	16	27
119620-79350	16	28
119620-79360	16	29
119625-11880	4	24
	17	8
119640-01640	3	10
119640-61400	4	60
119643-66900	16	34
119650-77911	16	35

Parts No.	Fig. No.	Ref. No.
119653-77950	12	131
119660-61901	12	61
119802-11870	4	23
	17	7
119802-51590	11	65
119802-51600	11	66
119802-51680	11	70
119802-51690	11	71
119802-55700	14	22
119802-55710	14	24
119802-55730	14	25
119803-11340	4	14
	17	5
119803-53400	13	13
119807-61420	12	24
119808-12540	5	9
119810-77340	16	32
120130-22301	8	25
121254-77810	15	29
121450-42450	10	35
121520-34810	9	1
121750-59890	14	12
121850-21130	8	12
121850-21290	8	5
121850-21920	8	6
121850-49540	10	23
	17	16
121850-49550	10	24
	17	17
121850-49811	10	26
121850-77021	5	5
	17	20
122780-59100	13	41
123501-79240	16	5
123900-13610	6	3
123900-13630	6	4
123900-25060	7	10
123900-77510	15	21
123900-77520	15	22
123900-77540	15	24
123907-03100	4	53
123907-03110	4	54
123907-03120	4	55
123907-03140	4	56
123907-11280	4	33
123907-11550	4	1
123907-11601	13	40
123907-11820	4	20
123907-11830	4	19
123907-39500	9	16

Parts No.	Fig. No.	Ref. No.
123907-59540	14	14
123907-59550	14	15
	17	19
123907-59560	14	19
124160-01751	2	40
	4	48
124160-11340	4	15
	17	6
124160-11360	4	63
124240-01871	2	42
124240-01883	17	3
124465-44950	10	36
	17	15
124722-59050	10	40
		43
	14	17
124766-59050	14	5
		9
128300-77920	16	38
129004-55612	14	1
129005-59830	9	18
129008-51920	11	13
129052-79270	16	18
129062-12560	5	13
129100-01580	2	5
	3	1
129100-55690	14	23
129150-02450	7	4
129150-11230	4	36
		40
129150-11750	4	18
		37
		41
129150-14200	7	1
129150-25920	7	17
129150-59131	13	45
		49
129155-51280	12	6
129155-61460	12	27
129211-77920	16	39
129240-79300	16	23
129255-61410	12	23
129423-77200	16	2
129423-77710	16	16
129457-59010	14	4
129486-59551	14	16
129509-51390	11	26
129550-59120	13	46
129612-12650	5	11
129795-01900	16	1

Parts No.	Fig. No.	Ref. No.
129900-01200	1	28
129900-01250	1	5
129900-01620	3	2
129900-01850	2	45
129900-01870	2	46
129900-02020	1	7
129900-02341	1	34
129900-02410	1	10
129900-02931	1	25
129900-02941	1	37
129900-12530	5	14
129900-13251	6	2
	17	11
129900-14100	7	7
129900-21200	8	4
129900-21600	8	16
129900-23001	8	27
129900-23200	8	31
129900-23601	8	32
129900-23611	8	35
129900-23911	8	34
129900-25100	7	11
129900-32001	2	15
129900-32030	2	27
	9	5
	17	12
129900-32040	2	28
	17	13
129900-42020	10	11
	17	14
129900-42462	10	14
129900-49870	10	31
	17	18
129900-77330	16	31
129902-21000	8	1
129906-01350	1	29
	17	2
129906-12520	5	15
129906-22910	8	37
129906-34851	9	2
129906-51580	11	63
129906-53000	13	2
129907-01190	1	30
129907-01500	2	8
129907-01950	11	135
129907-01960	11	136
129907-03011	4	50
129907-03061	4	51
129907-03070	4	52
129907-07900	4	66

Parts No. Index

Parts No.	Fig. No.	Ref. No.
129907-11100	4	10
129907-11110	4	11
129907-11120	4	12
129907-11250	4	30
129907-11260	4	31
129907-11270	4	32
129907-11321	4	49
129907-11341	4	29
129907-11510	4	16
129907-11650	4	34
129907-11660	4	38
129907-11700	4	2
129907-11800	4	68
129907-11910	4	25
129907-11920	4	42
129907-11950	4	26
129907-12110	5	1
	17	9
129907-13201	6	1
129907-14400	7	2
129907-21650	8	9
129907-25900	7	16
129907-39061	9	14
129907-42002	10	1
129907-49610	10	37
129907-49620	10	41
129907-49710	10	38
129907-49720	10	42
129907-49730	10	25
129907-49750	10	39
129907-49800	10	19
129907-51560	11	59
129907-55801	14	2
		28
129907-59140	14	13
129907-59710	13	50
129907-59810	13	52
129907-59820	13	53
129907-59830	13	54
129907-59840	13	55
129908-14581	7	3
129915-77051	5	6
129916-01710	3	9
129916-01790	3	8
129916-01800	2	4
129916-21590	8	13
129916-21610	8	8
129916-22950	8	39
129916-49530	10	22
129916-59020	11	133

Parts No.	Fig. No.	Ref. No.
129927-42140	2	28 A
129928-51900	11	12
129930-13201	6	7
	17	10
129932-92740	17	1
129933-11310	4	59
	17	4
129940-77011	15	1
129940-77100	15	2
129940-77130	15	5
129940-77140	15	6
129940-77150	15	7
129940-77160	15	8
129940-77171	15	9
129940-77181	15	10
129940-77190	15	11
129940-77200	15	12
129940-77210	15	13
129940-77221	15	14
129940-77230	15	15
129940-77240	15	16
129940-77250	15	17
129940-77260	15	18
129940-77270	15	19
129940-77280	15	20
129944-12111	5	2
129944-12500	5	8
129950-59221	14	10
129951-01740	2	6
129953-25300	7	15
129953-35000	9	6
129953-44710	10	16
129957-59120	14	6
129960-21930	8	10
129960-21940	8	11
129980-59510	14	11
129981-59010	14	8
129986-22050	8	19
129986-22080	8	17
129C26-01890	2	43
144626-51090	11	14
158552-51571	11	60
158552-51580	11	64
158552-51670	11	131
158552-51781	11	102
158552-52100	11	111
158552-52311	11	113
158552-52400	11	114
158552-52500	11	112
158552-61900	12	77

Parts No.	Fig. No.	Ref. No.
158553-51551	11	57
158553-51630	11	75
158553-51640	11	77
158553-51660	11	79
158553-51670	11	69
158553-51680	11	80
158553-51930	11	105
158557-51570	11	61
158560-51600	11	74
158560-61050	12	3
158560-61061	12	88
158560-61071	12	4
158560-61430	12	25
158560-61442	12	26
158563-51150	7	18
158563-51281	11	24
		25
158563-51330	11	35
158600-51270	11	23
158601-51550	11	58
158601-51570	11	62
158601-51650	11	78
158601-51770	11	101
158601-51790	11	103
171051-01921	1	6
171056-49120	9	25
22190-080002	9	19
		21
		23
	14	20
	17	21
22190-120002	11	106
		115
		116
22190-160002	12	82
22190-180002	11	107
		117
22190-220002	3	12
	17	22
22217-180000	11	118
22252-000300	8	26
22312-050140	11	119
22351-050010	11	120
22351-060012	1	11
22512-070140	7	8
	8	7
22857-500100	4	61
		62
23414-080000	10	32
	17	23

Parts No.	Fig. No.	Ref. No.
23857-030000	9	20
23857-060000	11	121
23875-030000	10	28
23876-020000	4	7
23876-030000	1	12
		13
		14
	4	8
23887-160002	12	84
24311-000070	2	29
	11	122
	17	24
24311-000120	4	27
		64
	17	25
24311-000160	14	26
24311-000320	2	41
	4	65
	17	26
24321-000650	14	27
24341-000530	17	27
24351-030750	2	30
	17	28
24356-190200	11	72
		123
24356-240210	11	124
24372-000150	11	73
25152-004100	10	15
26014-080252	16	33
26106-060102	11	125
	12	67
		68
26106-060122	10	29
26106-060142	12	85
26106-060162	13	56
26106-060202	10	30
26106-060252	12	86
26106-060302	10	12
26106-060352	11	126
26106-060402	12	87
26106-080122	3	13
	9	11
		22
		24
	10	33
26106-080142	7	9
26106-080162	2	31
		44
		47
	4	67

Parts No. Index

Parts No.	Fig. No.	Ref. No.
26106-080162	9	12
	11	137
26106-080182	13	57
26106-080202	2	32
		33
26106-080222	11	138
		139
26106-080302	14	3
26106-080352	5	7
26106-080402	2	34
	4	44
26106-080452	2	35
		36
	5	3
26106-080552	7	14
	10	13
26106-080602	4	45
		46
	10	34
26106-080702	2	37
26106-080752	2	38
26106-080802	5	4
	10	18
26106-100202	11	140
26106-120252	15	31
26206-100352	3	6
26206-100702	3	7
26216-100302	2	26
26226-080222	4	43
26306-080002	4	47
	6	6
26306-100002	2	39
	16	30
26450-100452	11	127
26756-060002	12	69
26776-180002	11	128
27241-300000	1	15
27241-400000	4	9
27310-070001	4	21
729900-02801	1	31
729906-01561	1	1
729906-53100	13	1
729907-01559	2	1
729932-51360	11	1
X2240610100	15	23
X9490561001	16	3

Parts No.	Fig. No.	Ref. No.

Parts No.	Fig. No.	Ref. No.

Parts No.	Fig. No.	Ref. No.