YANMAR

# PARTS CATALOG

0CV10-M89100EN

Last update Mar., 2013

# PREFACE

1.This Parts Catalog carries all parts incorporated in YANMAR Model 4TNV94L-XDB engine manufactured since September, 2003.

2.Each illustration corresponds to the parts list on the following page.

3.When ordering parts,clearly write down the engine model and serial number,as well as the name and number of each part in your order sheet. This will help insure reliable delivery of the parts you have ordered.

## Directions for the Parts Catalog.

**1.The parts stipulated in this Parts Catalog are not necessarily standard equipped parts.**
**2.Parts may change without prior notice.**
**3.The following is an example of the Parts Catalog format.**

0CF10-G21601 29. FUEL INJECTION PUMP(W/BOOST)

(A)=4JH-DT
(B)=4JH-DTZ
(C)=4JH-DTZP
(D)=4JH-DTZA
(E)=4JH-DTZY
(F)=

| ① REF. | ② LEV. | PARTS NO. | DESCRIPTION | Q'TY (A) | (B) | (C) | (D) | (E) | (F) | ③ I | ⑤ R |
|---|---|---|---|---|---|---|---|---|---|---|---|
| 1 | 1 | 729595-51390 | FUEL INJECTION PUMP | 1 | 1 | 1 | 1 | 1 | | | 1 |
| 1-1 | 1 | 729595-51391 | FUEL INJECTION PUMP | 1 | 1 | 1 | 1 | 1 | | N | 1 |
| | (A=E00185) | (B=E00200) | | | | | | | | | |
| 3 | 2 | 26022-060162 | SCREW M 6X 16 | 9 | 9 | 9 | 9 | 9 | | | |
| 3-1 ④ | 2 | 26022-060162 | SCREW M 6X 16 | 4 | 4 | 4 | 4 | 4 | | K | |
| | (A=E00156) | (B=E00156) | (C=E00156) (D=E00156) | (E=E00156) | | | | | | | |
| 4 | 2 | 129470-51040 | CAMSHAFT | 1 | 1 | 1 | 1 | 1 | | | |
| 5 | 2 | 122710-51050 | BEARING, ROLLER | 2 | 2 | 2 | 2 | 2 | | | |
| 6 | 2 | 129470-51060 | RETAINER | 1 | 1 | 1 | 1 | 1 | | | |

Remarks
(1) BOOST COMPEMSATOR TYPE. OPTIONAL PART, TO E00155,(4JH-DT, 4JH-DTZ

### ① Ref. No.

The Ref. No. listed may not be in accordance with the illustration Ref. No.

(Ex.) Illustration No. 1 — List Ref No. 1 (Before change) → 1- 1 (After change)

For interchangeable symbols N, R and K, illustrations for new parts may be abbreviated.

### ② Lev. (Level)

Level indication
The numbers below indicate the level of relativity towards the main part.
1 ----- Main parts (Assembly parts)
2 ----- Sub component included in " 1 ".
3 ----- Sub component included in " 2 ".
Note) Parts that are not for sale are partially illustrated but not listed.

### ③ Interchangeability Mark

When a part change takes place, one of the following interchangeability symbols is indicated beside the part.

| Symbol | Interchangeability | Contents note |
|---|---|---|
| N | Old ← Yes / No → New | New Part is interchangeable for Old Part but Old Part is not interchangeable for New Part. |
| Q | Old ← No / Yes → New | New Part is not interchangeable for Old Part but Old Part is interchangeable for New Part. |
| R | Old ← Yes / Yes → New | New/ Old Parts are both interchangeable. |
| S | Old ← No / No → New | New/ Old Parts are both not interchangeable. |
| W | | Part newly added. |
| Z | | Part discontinued. |
| F | | Not interchangeable by a single part but interchangeable together with related parts. |
| K | | Changes only for used parts quantities. |

### ④ Effective Machine No.

When a part changes, the effective Machine No. will be indicated in the (A)-(F) column.

| Product Symbol | Product No. | Product Symbol | Product No. |
|---|---|---|---|
| C | Clutch No. Compressor No. | F | Machine No. (Agricultural Equip.) |
| D | Drive No. | M | Machine No. |
| E | Engine No. | | |

Note 1) A date may follow the symbol. (Ex.) 1996.01
Note 2) " XXXXX " and " ZZZZZ " are for parts that could not be predicted or for engine models that could not be identified.
Note 3) (A=E00185) is the E (Engine Serial Number) for the column (A) model (in this case 4JH-DT) after the parts design change.

### ⑤ Remarks Mark

Figures or alphabets (symbols) are entered in the remarks column.
The comments (remarks) on parts that are indicated at the bottom of the illustration are the same symbols as those stated above.

# Contents

0CV10-M89100


| Fig. No. | Fig. Name |
|---|---|
| 4TNV94L-XDB | |
| 1. | CYLINDER BLOCK |
| 2. | GEAR HOUSING |
| 3. | FLYWHEEL HOUSING & OIL SUMP |
| 4. | CYLINDER HEAD & BONNET |
| 5. | SUCTION MANIFOLD |
| 6. | EXHAUST MANIFOLD |
| 7. | CAMSHAFT & DRIVING GEAR |
| 8. | CRANKSHAFT & PISTON |
| 9. | LUB. OIL SYSTEM |
| 10. | COOLING WATER SYSTEM |
| 11. | FUEL INJECTION PUMP |
| 12. | FUEL INJECTION VALVE |
| 13. | FUEL LINE |
| 14. | STARTING MOTOR |
| 15. | GENERATOR |
| 16. | GASKET SET |

# Fig.1. CYLINDER BLOCK

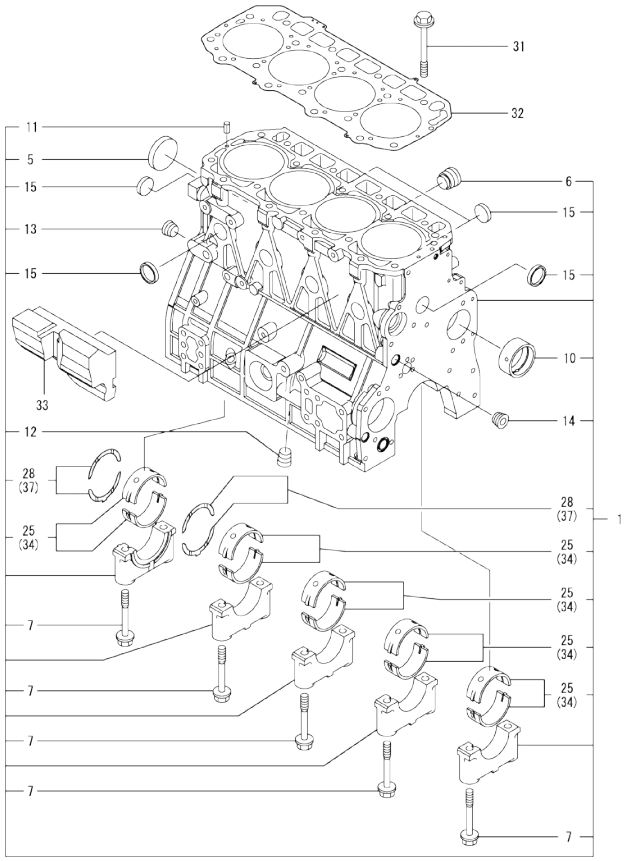


Remarks
(1) UNDER-SIZED(U.S=0.25)PART.
(2) OVER-SIZED(O.S=0.25)PART.
(3) REPAIR PART.



(A)=4TNV94L-XDB (D)=
(B)= (E)=
(C)= (F)=

| No. | Lev. | Parts No. | Description | Q'ty (A) | (B) | (C) | (D) | (E) | (F) | I | R |
|---|---|---|---|---|---|---|---|---|---|---|---|
| 1 | 1 | 729906-01560 | BLOCK ASSY, CYLINDER | 1 | | | | | | | |
| 5 | 2 | 129900-01250 | PLUG, DISH TYPE 55 | 1 | | | | | | | |
| 6 | 2 | 171051-01921 | PLUG, NPTF1 | 1 | | | | | | | |
| 7 | 2 | 129900-02020 | BOLT, METAL CAP | 10 | | | | | | | |
| 10 | 2 | 129900-02410 | BUSH, CAMSHAFT | 1 | | | | | | | |
| 11 | 2 | 22351-060012 | PIN, SPRING 6.0X12 | 2 | | | | | | | |
| 12 | 2 | 23876-030000 | PLUG, R03 | 1 | | | | | | | |
| 13 | 2 | 23876-030000 | PLUG, R03 | 1 | | | | | | | |
| 14 | 2 | 23876-030000 | PLUG, R03 | 1 | | | | | | | |
| 15 | 2 | 27241-300000 | PLUG 30 | 8 | | | | | | | |
| 25 | 2 | 729900-02800 | BEARING, MAIN | 5 | | | | | | | 3 |
| 28 | 2 | 129900-02930 | BEARING ASSY, THRUST | 2 | | | | | | | |
| 31 | 1 | 129900-01200 | BOLT, CYLINDER HEAD | 18 | | | | | | | |
| 32 | 1 | 129900-01340 | GASKET, HEAD | 1 | | | | | | | |
| 32-1 | 1 | 129907-01331 | GASKET, HEAD | 1 | | | | | | N | |
| 32-2 | (A=*2009.09) 1 (A=*2009.12) | 129906-01350 | GASKET, HEAD | 1 | | | | | | N | |
| 33 | 1 | 129907-01190 | SPACER | 1 | | | | | | | |
| 34 | 1 | 129900-02340 | BEARING ASSY, MAIN | 5 | | | | | | | 1 |
| 37 | 1 | 129900-02940 | BEARING, THRUST 0.25 | 2 | | | | | | | 2 |

N:Old ←Yes/No→ New. Q:Old ←No/Yes→ New. R:Old ←Yes/Yes→ New. S:Old ←No/No→ New. W:Add. Z:Discontinued. F:Interchangeable by set. K:Q'ty Change

Copyright (C) YANMAR GLOBAL CS CO., LTD. All RightsReserved.

# Fig.2. GEAR HOUSING



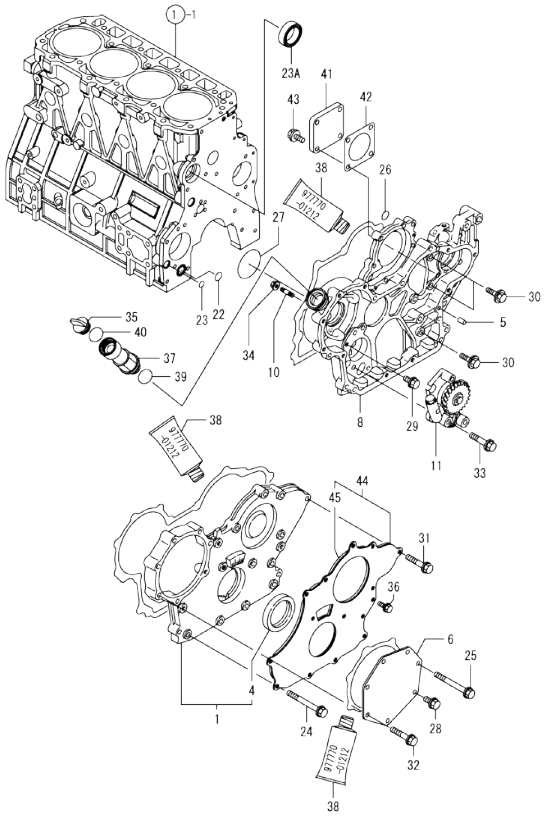


(A)=4TNV94L-XDB
(B)=
(C)=
(D)=
(E)=
(F)=

| No. | Lev. | Parts No. | Description | Q'ty (A) | (B) | (C) | (D) | (E) | (F) | I | R |
|---|---|---|---|---|---|---|---|---|---|---|---|
| 1 | 1 | 729907-01559 | COVER ASSY,GEAR CASE | 1 | | | | | | | |
| 4 | 2 | 129916-01800 | SEAL, OIL | 1 | | | | | | | |
| 5 | 1 | 129100-01580 | PIN, PARALLEL 8X16 | 4 | | | | | | | |
| 6 | 1 | 129951-01740 | COVER | 1 | | | | | | | |
| 8 | 1 | 129907-01500 | CASE, GEAR | 1 | | | | | | | |
| 10 | 1 | 26216-100302 | STUD, M10X 30 | 4 | | | | | | | |
| 11 | 1 | 129900-32001 | PUMP ASSY, OIL | 1 | | | | | | | |
| 22 | 1 | 129900-32030 | O-RING, P20 | 1 | | | | | | | |
| 23 | 1 | 129900-32040 | O-RING, P14 | 1 | | | | | | | |
| 23A | 1 | 129927-42140 | GASKET, PUMP OUTLET | 1 | | | | | | W | |
| | (A=*2014.09) | | | | | | | | | | |
| 24 | 1 | 129001-91810 | BOLT, M8X70 | 6 | | | | | | | |
| 25 | 1 | 129001-91810 | BOLT, M8X70 | 1 | | | | | | | |
| 26 | 1 | 24311-000070 | O-RING, 1AP7.0 | 1 | | | | | | | |
| 27 | 1 | 24351-030750 | O-RING, 1A3075 | 1 | | | | | | | |
| 28 | 1 | 26106-080162 | BOLT, M8X 16 PLATED | 1 | | | | | | | |
| 29 | 1 | 26106-080162 | BOLT, M8X 16 PLATED | 1 | | | | | | | |
| 30 | 1 | 26106-080202 | BOLT, M8X 20 PLATED | 3 | | | | | | | |
| 31 | 1 | 26106-080402 | BOLT, M8X 40 PLATED | 5 | | | | | | | |
| 32 | 1 | 26106-080402 | BOLT, M8X 40 PLATED | 5 | | | | | | | |
| 33 | 1 | 26106-080452 | BOLT, M8X 45 PLATED | 3 | | | | | | | |
| 34 | 1 | 26306-100002 | NUT, M10 | 4 | | | | | | | |
| 35 | 1 | 124160-01751 | CAP, FILLER | 1 | | | | | | | |
| 36 | 1 | 26106-080162 | BOLT, M8X 16 PLATED | 3 | | | | | | | |
| 37 | 1 | 171031-11741 | PIPE | 1 | | | | | | | |
| 38 | 1 | 977770-01212 | GASKET, LIQUID | 1 | | | | | | | 1 |
| 39 | 1 | 24311-000320 | O-RING, 1AP32.0 | 1 | | | | | | | |
| 40 | 1 | 24311-000320 | O-RING, 1AP32.0 | 1 | | | | | | | |
| 41 | 1 | 124240-01871 | COVER, PUMP | 1 | | | | | | | |
| 42 | 1 | 124240-01883 | GASKET | 1 | | | | | | | |
| 43 | 1 | 26106-080162 | BOLT, M8X 16 PLATED | 4 | | | | | | | |
| 44 | 1 | 129900-01850 | COVER ASSY,GEAR CASE | 1 | | | | | | | |
| 45 | 2 | 129900-01870 | SPONGE, GEAR CASE | 1 | | | | | | | |

Remarks
(1) OPTIONAL PART.

N:Old ←Yes/No→ New. Q:Old ←No/Yes→ New. R:Old ←Yes/Yes→ New. S:Old ←No/No→ New. W:Add. Z:Discontinued. F:Interchangeable by set. K:Q'ty Change

Copyright (C) YANMAR GLOBAL CS CO., LTD. All RightsReserved.

# Fig.3. FLYWHEEL HOUSING & OIL SUMP

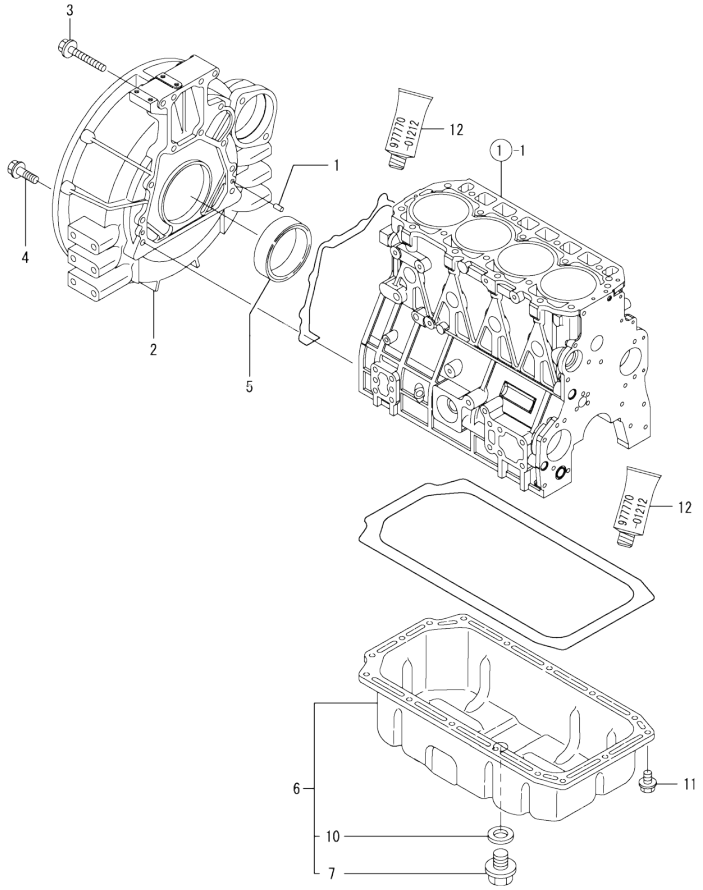


Remarks
(1) OPTIONAL PART.



(A)=4TNV94L-XDB (D)=
(B)= (E)=
(C)= (F)=

| No. | Lev. | Parts No. | Description | Q'ty (A) | (B) | (C) | (D) | (E) | (F) | I | R |
|---|---|---|---|---|---|---|---|---|---|---|---|
| 1 | 1 | 129100-01580 | PIN, PARALLEL 8X16 | 2 | | | | | | | |
| 2 | 1 | 129981-01600 | HOUSING, FLYWHEEL | 1 | | | | | | | |
| 3 | 1 | 26206-100702 | BOLT, M10X 70 PLATED | 4 | | | | | | | |
| 4 | 1 | 26206-100352 | BOLT, M10X 35 PLATED | 9 | | | | | | | |
| 5 | 1 | 129916-01790 | SEAL, D115/95XT11 | 1 | | | | | | | |
| 6 | 1 | 129953-01710 | OIL PAN ASSY | 1 | | | | | | | |
| 7 | 2 | 119640-01640 | PLUG, DRAIN M22 | 1 | | | | | | | |
| 10 | 2 | 22190-220002 | WASHER, SEAL 22 | 1 | | | | | | | |
| 11 | 1 | 26106-080122 | BOLT, M8X 12 PLATED | 16 | | | | | | | |
| 12 | 1 | 977770-01212 | GASKET, LIQUID | 1 | | | | | | | 1 |

N:Old ←Yes/No→ New. Q:Old ←No/Yes→ New. R:Old ←Yes/Yes→ New. S:Old ←No/No→ New. W:Add. Z:Discontinued. F:Interchangeable by set. K:Q'ty Change

Copyright (C) YANMAR GLOBAL CS CO., LTD. All RightsReserved.

# Fig.4. CYLINDER HEAD & BONNET



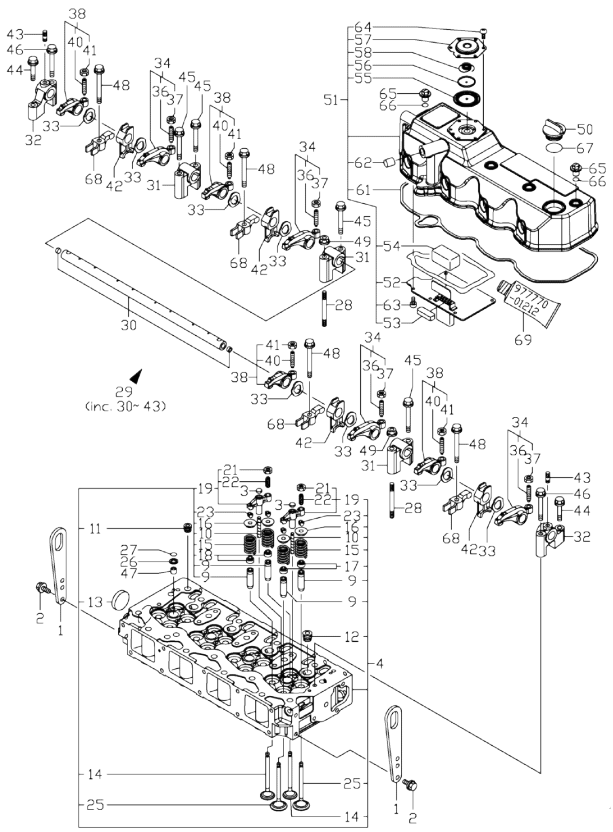


(A)=4TNV94L-XDB
(B)=
(C)=
(D)=
(E)=
(F)=

| No. | Lev. | Parts No. | Description | Q'ty (A) | (B) | (C) | (D) | (E) | (F) | I | R |
|---|---|---|---|---|---|---|---|---|---|---|---|
| 1 | 1 | 129900-07900 | LIFTER, ENGINE | 2 | | | | | | | |
| 2 | 1 | 26106-080162 | BOLT, M8X 16 PLATED | 4 | | | | | | | |
| 3 | 1 | 123907-11550 | SEAT, VALVE BRIDGE | 8 | | | | | | | |
| 4 | 1 | 129907-11700 | HEAD ASSY, CYLINDER | 1 | | | | | | | |
| 9 | 2 | 129907-11800 | GUIDE, VALVE | 16 | | | | | | | 1 |
| 10 | 2 | 123907-11820 | GUIDE, BRIDGE | 8 | | | | | | | |
| 11 | 2 | 23876-020000 | PLUG, R02 | 1 | | | | | | | |
| 12 | 2 | 23876-030000 | PLUG, R03 | 4 | | | | | | | |
| 13 | 2 | 27241-400000 | PLUG, 40 | 1 | | | | | | | |
| 14 | 2 | 129907-11110 | VALVE, EXHAUST | 8 | | | | | | | |
| 15 | 2 | 129907-11120 | SPRING, VALVE | 16 | | | | | | | |
| 16 | 2 | 119620-11180 | RETAINER, SPRING | 16 | | | | | | | |
| 17 | 2 | 124160-11340 | SEAL, VALVE STEM | 8 | | | | | | | |
| 18 | 2 | 124950-11340 | SEAL, VALVE STEM | 8 | | | | | | | |
| 19 | 2 | 129907-11510 | BRIDGE ASSY, VALVE | 8 | | | | | | | |
| 21 | 3 | 129150-11750 | NUT, M8 | 8 | | | | | | | |
| 22 | 3 | 123907-11830 | ADJUSTER | 8 | | | | | | | |
| 23 | 2 | 27310-070001 | COTTER, 7 | 16 | | | | | | | |
| 25 | 2 | 129907-11100 | VALVE, SUCTION | 8 | | | | | | | |
| 26 | 1 | 119625-11880 | SEAT, NOZZLE | 4 | | | | | | | |
| 27 | 1 | 24311-000120 | O-RING, 1AP12.0 | 4 | | | | | | | |
| 28 | 1 | 119593-11301 | BOLT, STUD M8X80 | 2 | | | | | | | |
| 29 | 1 | 129907-11341 | SHAFT ASSY, ROCKER | 1 | | | | | | | |
| 30 | 2 | 129907-11250 | SHAFT, ROCKER ARM | 1 | | | | | | | |
| 31 | 2 | 129907-11260 | SUPPORT, ROCKER ARM | 3 | | | | | | | |
| 32 | 2 | 129907-11270 | SUPPORT, ROCKER ARM | 2 | | | | | | | |
| 33 | 2 | 123907-11280 | WASHER | 8 | | | | | | | |
| 34 | 2 | 129907-11650 | ARM ASSY, ROCKER | 4 | | | | | | | |
| 36 | 3 | 129150-11230 | SCREW, VALVE ADJUST | 4 | | | | | | | |
| 37 | 3 | 129150-11750 | NUT, M8 | 4 | | | | | | | |
| 38 | 2 | 129907-11660 | ARM ASSY, ROCKER | 4 | | | | | | | |
| 40 | 3 | 129150-11230 | SCREW, VALVE ADJUST | 4 | | | | | | | |
| 41 | 3 | 129150-11750 | NUT, M8 | 4 | | | | | | | |
| 42 | 2 | 129907-11920 | RETAINER, NOZZLE | 4 | | | | | | | |
| 43 | 2 | 26226-080222 | STUD, M8X 22 | 2 | | | | | | | |
| 44 | 1 | 26106-080402 | BOLT, M8X 40 PLATED | 2 | | | | | | | |
| 45 | 1 | 26106-080602 | BOLT, M8X 60 PLATED | 4 | | | | | | | |
| 46 | 1 | 26106-080602 | BOLT, M8X 60 PLATED | 2 | | | | | | | |
| 47 | 1 | 119802-11870 | PROTECTOR, NOZZLE | 4 | | | | | | | |
| 48 | 1 | 129907-11950 | BOLT, M8X75 | 4 | | | | | | | |
| 49 | 1 | 26306-080002 | NUT, M8 | 2 | | | | | | | |
| 50 | 1 | 124160-01751 | CAP, FILLER | 1 | | | | | | | |
| 51 | 1 | 129907-11320 | BONNET ASSY, HEAD | 1 | | | | | | | |
| 52 | 2 | 129907-03010 | PLATE, BAFFLE | 1 | | | | | | | |
| 53 | 2 | 129907-03060 | BAFFLE, BREATHER | 1 | | | | | | | |
| 54 | 2 | 129907-03070 | BAFFLE, BREATHER | 1 | | | | | | | |
| 55 | 2 | 123907-03100 | DIAPHRAGM | 1 | | | | | | | |
| 56 | 2 | 123907-03110 | PLATE | 1 | | | | | | | |
| 57 | 2 | 123907-03120 | PLATE, BREATHER | 1 | | | | | | | |
| 58 | 2 | 123907-03140 | SPRING, DIAPHRAGM | 1 | | | | | | | |
| 61 | 2 | 129907-11310 | GASKET, BONNET | 1 | | | | | | | |

Remarks
(1) REPAIR PART.
(2) OPTIONAL PART.

N:Old ←Yes/No→ New. Q:Old ←No/Yes→ New. R:Old ←Yes/Yes→ New. S:Old ←No/No→ New. W:Add. Z:Discontinued. F:Interchangeable by set. K:Q'ty Change

++ CONTINUE ++

Copyright (C) YANMAR GLOBAL CS CO., LTD. All RightsReserved.

# Fig.4. CYLINDER HEAD & BONNET



(A)=4TNV94L-XDB (D)=
(B)= (E)=
(C)= (F)=

| No. | Lev. | Parts No. | Description | Q'ty (A) | (B) | (C) | (D) | (E) | (F) | I | R |
|---|---|---|---|---|---|---|---|---|---|---|---|
| 62 | 2 | 119640-61400 | PLUG | 1 | | | | | | | |
| 63 | 2 | 22857-500100 | SCREW, 5X10 | 6 | | | | | | | |
| 64 | 2 | 22857-500100 | SCREW, 5X10 | 6 | | | | | | | |
| 65 | 1 | 124160-11360 | KNOB | 4 | | | | | | | |
| 66 | 1 | 24311-000120 | O-RING, 1AP12.0 | 4 | | | | | | | |
| 67 | 1 | 24311-000320 | O-RING, 1AP32.0 | 1 | | | | | | | |
| 68 | 1 | 129907-11910 | RETAINER, NOZZLE | 4 | | | | | | | |
| 69 | 1 | 977770-01212 | GASKET, LIQUID | 1 | | | | | | | 2 |

Remarks
(1) REPAIR PART.
(2) OPTIONAL PART.

N:Old ←Yes/No→ New. Q:Old ←No/Yes→ New. R:Old ←Yes/Yes→ New. S:Old ←No/No→ New. W:Add. Z:Discontinued. F:Interchangeable by set. K:Q'ty Change

Copyright (C) YANMAR GLOBAL CS CO., LTD. All RightsReserved.

# Fig.5. SUCTION MANIFOLD



(A)=4TNV94L-XDB
(B)=
(C)=
(D)=
(E)=
(F)=

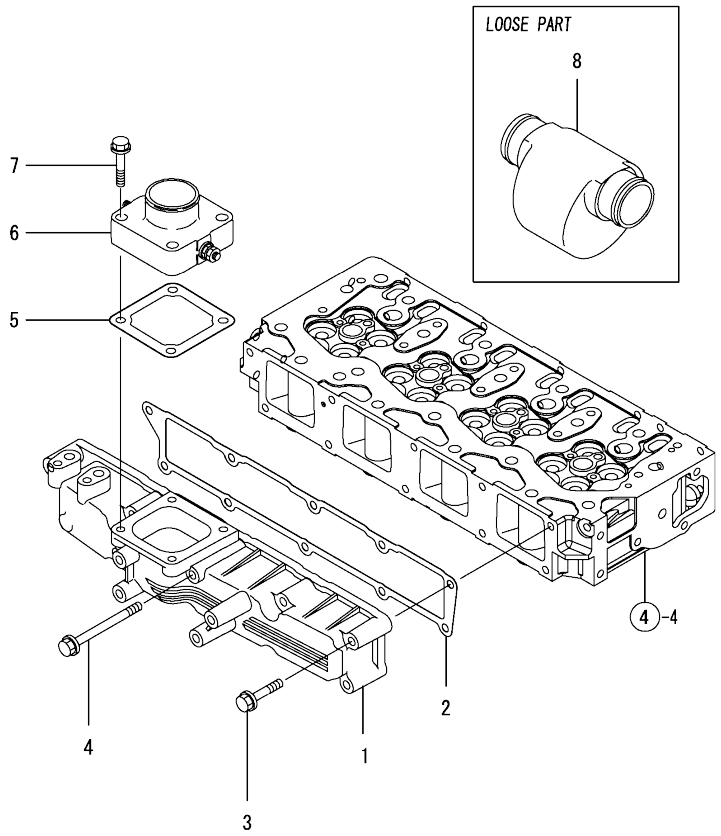


| No. | Lev. | Parts No. | Description | Q'ty (A) | (B) | (C) | (D) | (E) | (F) | I | R |
|---|---|---|---|---|---|---|---|---|---|---|---|
| 1 | 1 | 129907-12100 | MANIFOLD, AIR INTAKE | 1 | | | | | | | |
| 2 | 1 | 129907-12110 | GASKET, MANIFOLD | 1 | | | | | | | |
| 3 | 1 | 26106-080552 | BOLT, M8X 55 PLATED | 9 | | | | | | | |
| 4 | 1 | 26106-080852 | BOLT, M8X 85 PLATED | 1 | | | | | | | |
| 5 | 1 | 121850-77021 | GASKET, AIR HEATER | 1 | | | | | | | |
| 6 | 1 | 129915-77050 | HEATER, AIR 12V | 1 | | | | | | | |
| 7 | 1 | 26106-080352 | BOLT, M8X 35 PLATED | 4 | | | | | | | |
| 8 | 1 | 119005-12060 | SILENCER, INTAKE | 1 | | | | | | | |

N:Old ◄Yes/No► New. Q:Old ◄No/Yes► New. R:Old ◄Yes/Yes► New. S:Old ◄No/No► New. W:Add. Z:Discontinued. F:Interchangeable by set. K:Q'ty Change

Copyright (C) YANMAR GLOBAL CS CO., LTD. All RightsReserved.

# Fig.6. EXHAUST MANIFOLD

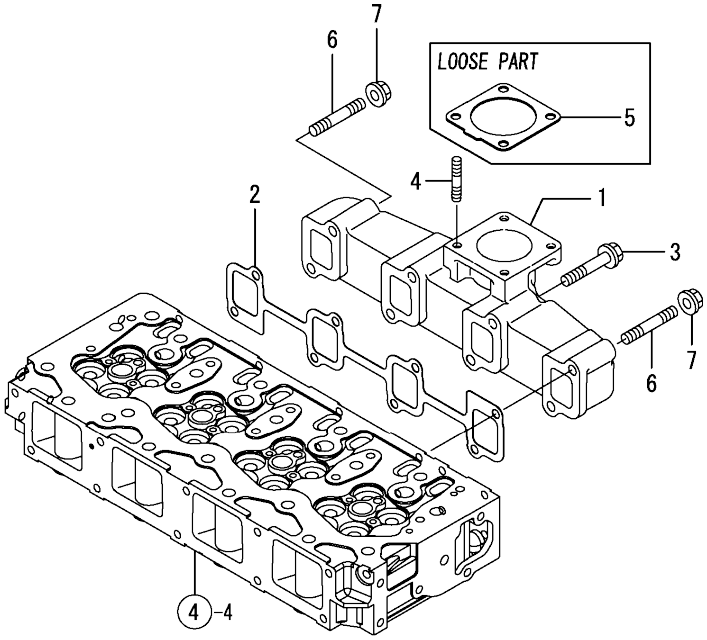




(A)=4TNV94L-XDB (D)=
(B)= (E)=
(C)= (F)=

| No. | Lev. | Parts No. | Description | Q'ty (A) | (B) | (C) | (D) | (E) | (F) | I | R |
|---|---|---|---|---|---|---|---|---|---|---|---|
| 1 | 1 | 129900-13200 | MANIFOLD, EXHAUST | 1 | | | | | | | |
| 2 | 1 | 129900-13251 | GASKET, EXH.MANIFOLD | 1 | | | | | | | |
| 3 | 1 | 123900-13630 | BOLT, M8X80 | 6 | | | | | | | |
| 4 | 1 | 119131-18320 | BOLT, STUD M8X22 | 4 | | | | | | | |
| 5 | 1 | 129930-13201 | GASKET, SILENCER | 1 | | | | | | | |
| 6 | 1 | 123900-13610 | BOLT, STUD M8X80 | 2 | | | | | | | |
| 7 | 1 | 26306-080002 | NUT, M8 | 2 | | | | | | | |

N:Old ←Yes/No→ New. Q:Old ←No/Yes→ New. R:Old ←Yes/Yes→ New. S:Old ←No/No→ New. W:Add. Z:Discontinued. F:Interchangeable by set. K:Q'ty Change

Copyright (C) YANMAR GLOBAL CS CO., LTD. All RightsReserved.

# Fig.7. CAMSHAFT & DRIVING GEAR



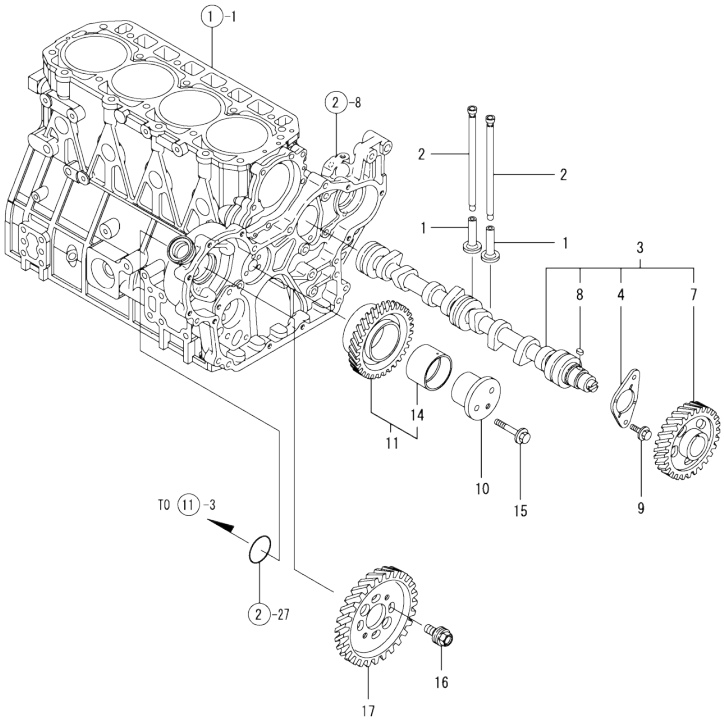


(A)=4TNV94L-XDB (D)=
(B)= (E)=
(C)= (F)=

| No. | Lev. | Parts No. | Description | Q'ty (A) | (B) | (C) | (D) | (E) | (F) | I | R |
|---|---|---|---|---|---|---|---|---|---|---|---|
| 1 | 1 | 129150-14200 | TAPPET | 8 | | | | | | | |
| 2 | 1 | 129907-14400 | PUSH-ROD | 8 | | | | | | | |
| 3 | 1 | 129907-14581 | CAMSHAFT ASSY | 1 | | | | | | | |
| 3-1 | 1 | 129908-14581 | CAMSHAFT ASSY | 1 | | | | | | N | |
| | (A=EZZZZZ) | | | | | | | | | | |
| 4 | 2 | 129150-02450 | BEARING, THRUST | 1 | | | | | | | |
| 7 | 2 | 129900-14100 | GEAR, CAMSHAFT | 1 | | | | | | | |
| 8 | 2 | 22512-070140 | KEY, 7X 14 | 1 | | | | | | | |
| 9 | 1 | 26106-080162 | BOLT, M8X 16 PLATED | 2 | | | | | | | |
| 10 | 1 | 123900-25060 | SHAFT, IDLE GEAR | 1 | | | | | | | |
| 11 | 1 | 129900-25100 | GEAR ASSY, IDLE | 1 | | | | | | | |
| 14 | 2 | 129150-25920 | BUSH, IDLE GEAR | 1 | | | | | | | 1 |
| 15 | 1 | 26106-080552 | BOLT, M8X 55 PLATED | 3 | | | | | | | |
| 16 | 1 | 129953-25300 | BOLT | 4 | | | | | | | |
| 17 | 1 | 123907-25909 | GEAR, PUMP | 1 | | | | | | | |

Remarks
(1) REPAIR PART.

N:Old $\frac{\text{Yes}}{\text{No}}$ New. Q:Old $\frac{\text{No}}{\text{Yes}}$ New. R:Old $\frac{\text{Yes}}{\text{Yes}}$ New. S:Old $\frac{\text{No}}{\text{No}}$ New. W:Add. Z:Discontinued. F:Interchangeable by set. K:Q'ty Change

Copyright (C) YANMAR GLOBAL CS CO., LTD. All RightsReserved.

# Fig.8. CRANKSHAFT & PISTON



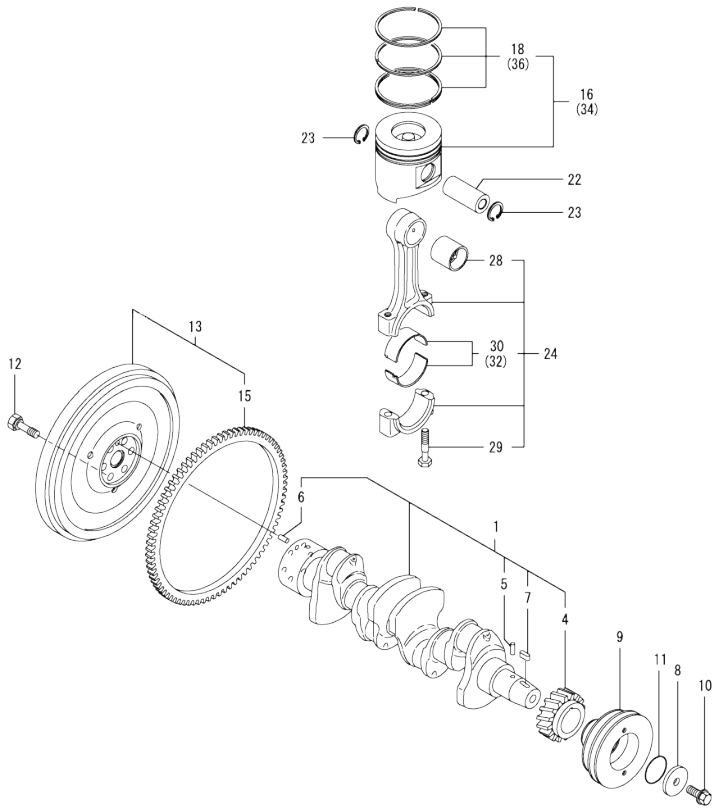


(A)=4TNV94L-XDB (D)=
(B)= (E)=
(C)= (F)=

| No. | Lev. | Parts No. | Description | Q'ty (A) | (B) | (C) | (D) | (E) | (F) | I | R |
|---|---|---|---|---|---|---|---|---|---|---|---|
| 1 | 1 | 129902-21000 | CRANKSHAFT ASSY | 1 | | | | | | | |
| 4 | 2 | 129900-21200 | GEAR, CRANKSHAFT | 1 | | | | | | | |
| 5 | 2 | 121850-21290 | PIN | 1 | | | | | | | |
| 6 | 2 | 121850-21920 | PIN, PARALLEL 10X22 | 1 | | | | | | | |
| 7 | 2 | 22512-070140 | KEY, 7X 14 | 1 | | | | | | | |
| 8 | 1 | 129960-21640 | WASHER | 1 | | | | | | | |
| 9 | 1 | 129916-21620 | V-PULLEY, CRANKSHAFT | 1 | | | | | | | |
| 10 | 1 | 129916-21610 | BOLT | 1 | | | | | | | |
| 11 | 1 | 24341-000530 | O-RING, 1AS53.0 | 1 | | | | | | | |
| 12 | 1 | 121850-21130 | BOLT, FLYWHEEL | 6 | | | | | | | |
| 13 | 1 | 129916-21590 | FLYWHEEL ASSY | 1 | | | | | | | |
| 15 | 2 | 129900-21600 | GEAR, RING | 1 | | | | | | | |
| 16 | 1 | 129906-22080 | PISTON ASSY | 4 | | | | | | | |
| 16-1 | 1 | 129906-22090 | PISTON ASSY | 4 | | | | | | F | 4 |
| | (A=*2009.12) | | | | | | | | | | |
| 18 | 2 | 129906-22050 | RING SET, PISTON | 4 | | | | | | | |
| 22 | 1 | 120130-22301 | PIN, PISTON | 4 | | | | | | | |
| 23 | 1 | 22252-000300 | RING, 30 | 8 | | | | | | | |
| 24 | 1 | 129900-23000 | ROD ASSY, CONNECTING | 4 | | | | | | | |
| 28 | 2 | 129900-23910 | BEARING, PISTON PIN | 4 | | | | | | | 1 |
| 29 | 2 | 129900-23200 | BOLT, CONNECTING ROD | 8 | | | | | | | |
| 30 | 2 | 129900-23600 | BEARING, CRANK PIN | 4 | | | | | | | |
| 32 | 1 | 129900-23610 | BEARING ASSY, 0.25US | 4 | | | | | | | 2 |
| 34 | 1 | 729906-22900 | PISTON ASSY, 0.25 OS | 4 | | | | | | | 3 |
| 34-1 | 1 | 129906-22900 | PISTON ASSY, 0.25 OS | 4 | | | | | | R | 3 |
| | (A=EXXXXX) | | | | | | | | | | |
| 34-2 | 1 | 129906-22910 | PISTON ASSY, 0.25 OS | 4 | | | | | | F | 3 |
| | (A=*2009.12) | | | | | | | | | | |
| 36 | 2 | 729906-22950 | RING SET, 0.25 OS | 4 | | | | | | | 3 |
| 36-1 | 2 | 129916-22950 | RING SET, 0.25 OS | 4 | | | | | | R | 3 |
| | (A=EXXXXX) | | | | | | | | | | |

Remarks
(1) Repair part.
(2) Under-sized (U.S.=0.25) part.
(3) Over-sized (O.S.=0.25) part.
(4) Ref. No.16 is interchangeable with a set of Ref. No.16-1 and Fig.1 Ref. No.32-2.

N:Old ←Yes/No→ New. Q:Old ←No/Yes→ New. R:Old ←Yes/Yes→ New. S:Old ←No/No→ New. W:Add. Z:Discontinued. F:Interchangeable by set. K:Q'ty Change

Copyright (C) YANMAR GLOBAL CS CO., LTD. All RightsReserved.

# Fig.9. LUB. OIL SYSTEM



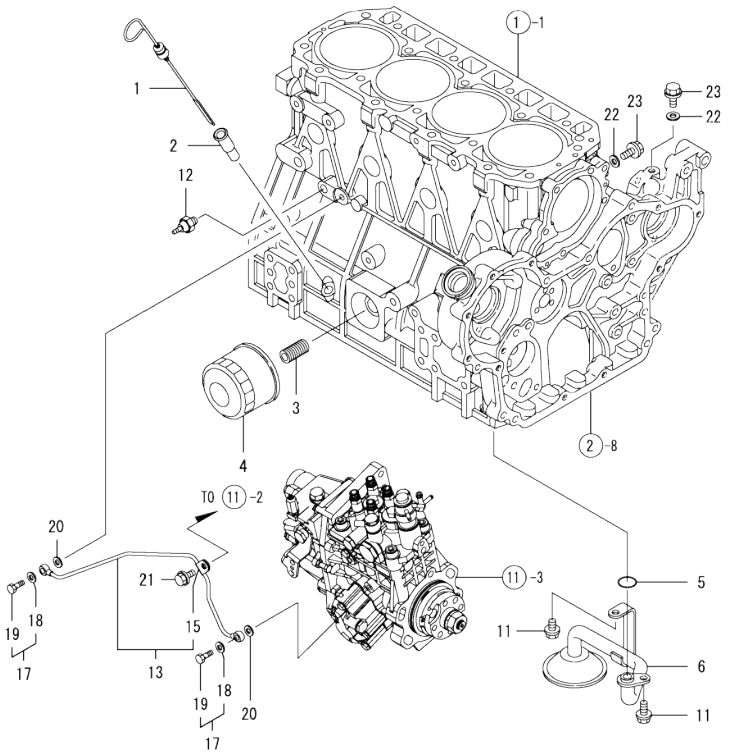


(A)=4TNV94L-XDB
(B)=
(C)=
(D)=
(E)=
(F)=

| No. | Lev. | Parts No. | Description | Q'ty (A) | (B) | (C) | (D) | (E) | (F) | I | R |
|---|---|---|---|---|---|---|---|---|---|---|---|
| 1 | 1 | 129900-34800 | DIPSTICK | 1 | | | | | | | |
| 2 | 1 | 121520-34810 | GUIDE, DIPSTICK | 1 | | | | | | | |
| 3 | 1 | 119000-35140 | BOLT, STUD FILTER | 1 | | | | | | | |
| 4 | 1 | 129150-35153 | FILTER ASSY, D80X80L | 1 | | | | | | | 1 |
| 5 | 1 | 129900-32030 | O-RING, P20 | 1 | | | | | | | |
| 6 | 1 | 129900-35000 | PIPE ASSY, OIL INLET | 1 | | | | | | | |
| 11 | 1 | 26106-080122 | BOLT, M8X 12 PLATED | 2 | | | | | | | |
| 12 | 1 | 114250-39450 | SWITCH, HYDRAULIC | 1 | | | | | | | |
| 13 | 1 | 129907-39060 | PIPE ASSY, OIL | 1 | | | | | | | |
| 15 | 2 | 123907-39500 | RETAINER, PIPE | 1 | | | | | | | |
| 17 | 1 | 129005-59830 | BOLT ASSY, JOINT M8 | 2 | | | | | | | |
| 18 | 2 | 22190-080002 | WASHER, SEAL 6 | 2 | | | | | | | |
| 19 | 2 | 23857-030000 | BOLT, JOINT 3 | 2 | | | | | | | |
| 20 | 1 | 22190-080002 | WASHER, SEAL 6 | 2 | | | | | | | |
| 21 | 1 | 26106-080122 | BOLT, M8X 12 PLATED | 1 | | | | | | | |
| 22 | 1 | 22190-080002 | WASHER, SEAL 6 | 2 | | | | | | | |
| 23 | 1 | 26106-080122 | BOLT, M8X 12 PLATED | 2 | | | | | | | |

Remarks
(1) REPAIR PART.

N:Old ←Yes/No→ New. Q:Old ←No/Yes→ New. R:Old ←Yes/Yes→ New. S:Old ←No/No→ New. W:Add. Z:Discontinued. F:Interchangeable by set. K:Q'ty Change

Copyright (C) YANMAR GLOBAL CS CO., LTD. All RightsReserved.

# Fig.10. COOLING WATER SYSTEM



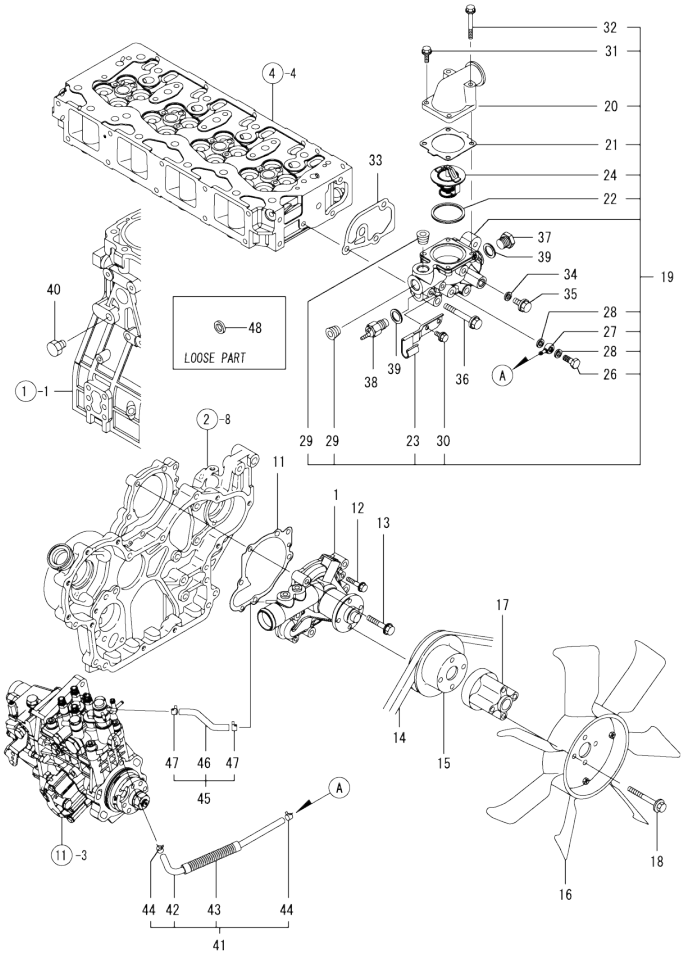


(A)=4TNV94L-XDB
(B)=
(C)=
(D)=
(E)=
(F)=

| No. | Lev. | Parts No. | Description | Q'ty (A) | (B) | (C) | (D) | (E) | (F) | I | R |
|---|---|---|---|---|---|---|---|---|---|---|---|
| 1 | 1 | 129907-42000 | PUMP ASSY, WATER | 1 | | | | | | | |
| 11 | 1 | 129900-42020 | GASKET, WATER PUMP | 1 | | | | | | | |
| 12 | 1 | 26106-060302 | BOLT, M6X 30 PLATED | 2 | | | | | | | |
| 13 | 1 | 26106-080552 | BOLT, M8X 55 PLATED | 5 | | | | | | | |
| 14 | 1 | 25153-004500 | V-BELT, B45 | 1 | | | | | | | |
| 15 | 1 | 129916-42410 | V-PULLEY, C.W.PUMP | 1 | | | | | | | |
| 16 | 1 | 129981-44740 | FAN, COOLING D=450 | 1 | | | | | | | |
| 17 | 1 | 119117-44760 | SPACER, FAN | 1 | | | | | | | |
| 18 | 1 | 129916-44770 | BOLT, M8X78 | 4 | | | | | | | |
| 19 | 1 | 129906-49810 | CASE ASSY,THERMOSTAT | 1 | | | | | | | |
| 20 | 2 | 129980-49530 | COVER, THERMOSTAT | 1 | | | | | | | |
| 21 | 2 | 121850-49540 | GASKET, THERMOSTAT | 1 | | | | | | | |
| 22 | 2 | 121850-49550 | GASKET, THERMOSTAT | 1 | | | | | | | |
| 23 | 2 | 129907-49730 | RETAINER, PIPE | 1 | | | | | | | |
| 24 | 2 | 121850-49800 | THERMOSTAT, 82C | 1 | | | | | | | |
| 26 | 2 | 105582-59150 | BOLT, PIPE JOINT M8 | 1 | | | | | | | |
| 27 | 2 | 23387-040800 | JOINT, HOSE 4-8 | 1 | | | | | | | |
| 28 | 2 | 23414-080000 | GASKET, 8X1.0 | 2 | | | | | | | |
| 29 | 2 | 129916-49740 | PLUG, R3/8 | 2 | | | | | | | |
| 30 | 2 | 26106-060122 | BOLT, M6X 12 PLATED | 2 | | | | | | | |
| 31 | 2 | 26106-060202 | BOLT, M6X 20 PLATED | 2 | | | | | | | |
| 32 | 2 | 26106-060552 | BOLT, M6X 55 PLATED | 2 | | | | | | | |
| 33 | 1 | 129900-49870 | GASKET, THERMOSTAT | 1 | | | | | | | |
| 34 | 1 | 23414-080000 | GASKET, 8X1.0 | 1 | | | | | | | |
| 35 | 1 | 26106-080122 | BOLT, M8X 12 PLATED | 1 | | | | | | | |
| 36 | 1 | 26106-080602 | BOLT, M8X 60 PLATED | 3 | | | | | | | |
| 37 | 1 | 121450-42450 | PLUG, M16 | 1 | | | | | | | |
| 38 | 1 | 121250-44901 | SWITCH, THERMO 110 | 1 | | | | | | | |
| 39 | 1 | 124465-44950 | GASKET, 16 | 2 | | | | | | | |
| 40 | 1 | 171056-49120 | PLUG, DRAIN R1/4 | 1 | | | | | | | |
| 41 | 1 | 129907-49610 | HOSE ASSY, WATER | 1 | | | | | | | |
| 42 | 2 | 129907-49710 | HOSE, WATER | 1 | | | | | | | |
| 43 | 2 | 129907-49750 | TUBE, CORRUGATED | 1 | | | | | | | |
| 44 | 2 | 124722-59050 | CLAMP, HOSE 9 | 2 | | | | | | | |
| 45 | 1 | 129907-49620 | HOSE ASSY, WATER | 1 | | | | | | | |
| 46 | 2 | 129907-49720 | HOSE, WATER | 1 | | | | | | | |
| 47 | 2 | 124722-59050 | CLAMP, HOSE 9 | 2 | | | | | | | |
| 48 | 1 | 129150-49360 | GASKET | 1 | | | | | | Z | |
| | (A=FROM 1ST) | | | | | | | | | | |

N:Old ←Yes/No→ New. Q:Old ←No/Yes→ New. R:Old ←Yes/Yes→ New. S:Old ←No/No→ New. W:Add. Z:Discontinued. F:Interchangeable by set. K:Q'ty Change

Copyright (C) YANMAR GLOBAL CS CO., LTD. All RightsReserved.

# Fig.11. FUEL INJECTION PUMP

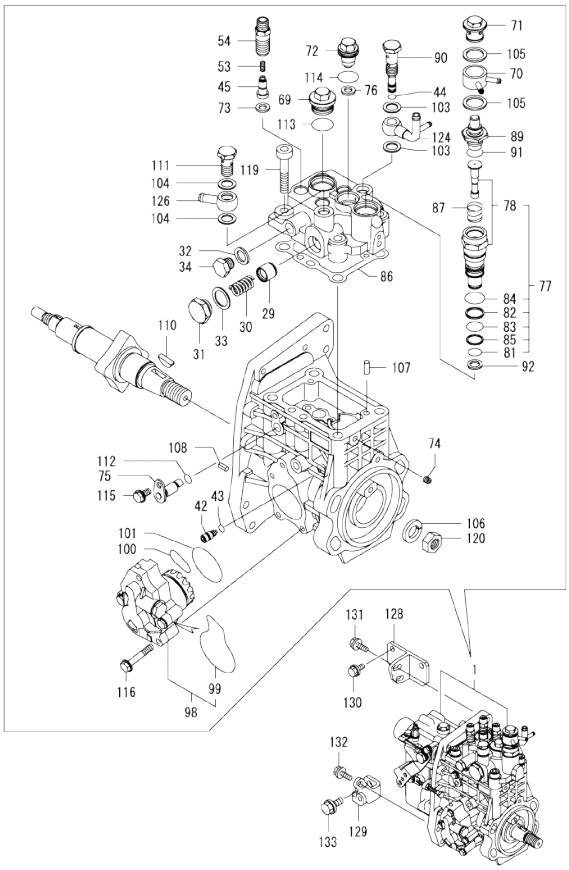


Remarks
(1) REPAIR PART.

0CV10-M89100 Fig.11

(A)=4TNV94L-XDB (D)=
(B)= (E)=
(C)= (F)=

| No. | Lev. | Parts No. | Description | Q'ty (A) | (B) | (C) | (D) | (E) | (F) | I | R |
|---|---|---|---|---|---|---|---|---|---|---|---|
| 1 | 1 | 729906-51330 | FIE ASSY | 1 | | | | | | | 1 |
| 29 | 2 | 158601-51770 | PISTON, ACCUMLATOR | 1 | | | | | | | |
| 30 | 2 | 158552-51780 | SPRING, ACCUMULATOR | 1 | | | | | | | |
| 30-1 | 2 | 158552-51781 | SPRING, ACCUMULATOR | 1 | | | | | | N | |
| | (A=E/#*****) | | | | | | | | | | |
| 31 | 2 | 158601-51790 | PLUG | 1 | | | | | | | |
| 32 | 2 | 22190-120002 | WASHER, SEAL 12 | 1 | | | | | | | |
| 33 | 2 | 22190-180002 | WASHER, SEAL 18 | 1 | | | | | | | |
| 34 | 2 | 23887-120002 | PLUG, 12 | 1 | | | | | | | |
| 42 | 2 | 158600-51270 | STOPPER, TAPPET | 1 | | | | | | | |
| 43 | 2 | 158563-51281 | O-RING, 4D S6 | 1 | | | | | | | |
| 44 | 2 | 158563-51281 | O-RING, 4D S6 | 1 | | | | | | | |
| 45 | 2 | 158560-51300 | VALVE ASSY, DELIVERY | 4 | | | | | | | |
| 53 | 2 | 158563-51330 | SPRING, DELIVERY | 4 | | | | | | | |
| 54 | 2 | 129907-51340 | HOLDER, DELIVERY | 4 | | | | | | | |
| 69 | 2 | 158601-51550 | PLUG, M22 | 1 | | | | | | | |
| 70 | 2 | 158553-51551 | JOINT, COOLING WATER | 1 | | | | | | | |
| 71 | 2 | 158601-51570 | PLUG | 1 | | | | | | | |
| 72 | 2 | 129907-51560 | PLUG, M16 | 1 | | | | | | | |
| 73 | 2 | 158552-51570 | GASKET, PLUG | 4 | | | | | | | |
| 74 | 2 | 158557-51570 | PLUG, RACK | 1 | | | | | | | |
| 75 | 2 | 158552-51580 | LIFTER, LINK | 1 | | | | | | | |
| 76 | 2 | 129906-51580 | GASKET, PLUG | 1 | | | | | | | |
| 77 | 2 | 119802-51590 | TIMER ASSY | 1 | | | | | | | |
| 78 | 3 | 119802-51600 | TIMER ASSY | 1 | | | | | | | |
| 81 | 3 | 158553-51670 | O-RING | 1 | | | | | | | |
| 82 | 3 | 119802-51680 | RING, BACKUP | 1 | | | | | | | |
| 83 | 3 | 119802-51690 | O-RING | 1 | | | | | | | |
| 84 | 3 | 24356-010200 | O-RING, 4D1020 | 1 | | | | | | | |
| 85 | 3 | 24372-000150 | RING, BACK UP T2P15 | 1 | | | | | | | |
| 86 | 2 | 158560-51600 | GASKET | 1 | | | | | | | |
| 87 | 2 | 158553-51630 | SPRING, TIMER | 1 | | | | | | | |
| 89 | 2 | 158553-51640 | THERMOELEMENT | 1 | | | | | | | |
| 90 | 2 | 158601-51650 | JOINT, OVER FLOW | 1 | | | | | | | |
| 91 | 2 | 158553-51660 | O-RING, P14 | 1 | | | | | | | |
| 92 | 2 | 158553-51680 | GASKET, TIMER | 1 | | | | | | | |
| 98 | 2 | 158552-52100 | PUMP ASSY, FUEL FEED | 1 | | | | | | | |
| 99 | 3 | 158552-52500 | O-RING | 1 | | | | | | | |
| 100 | 2 | 158552-52310 | O-RING | 1 | | | | | | | |
| 101 | 2 | 158552-52400 | O-RING, 4E S42 | 1 | | | | | | | |
| 103 | 2 | 22190-120002 | WASHER, SEAL 12 | 2 | | | | | | | |
| 104 | 2 | 22190-120002 | WASHER, SEAL 12 | 2 | | | | | | | |
| 105 | 2 | 22190-180002 | WASHER, SEAL 18 | 2 | | | | | | | |
| 106 | 2 | 22217-180000 | WASHER, SPRING 18 | 1 | | | | | | | |
| 107 | 2 | 22312-050140 | PIN, PARALLEL M5X14 | 2 | | | | | | | |
| 108 | 2 | 22351-050010 | PIN, SPRING 5.0X10 | 2 | | | | | | | |
| 110 | 2 | 144626-51090 | FEATHER KEY, 5X19 | 1 | | | | | | | |
| 111 | 2 | 23857-060000 | BOLT, JOINT 6 | 1 | | | | | | | |
| 112 | 2 | 24311-000070 | O-RING, 1AP7.0 | 1 | | | | | | | |
| 113 | 2 | 24356-010200 | O-RING, 4D1020 | 1 | | | | | | | |
| 114 | 2 | 24356-020210 | O-RING, 4D2021 | 1 | | | | | | | |

N:Old ←Yes/No→ New. Q:Old ←No/Yes→ New. R:Old ←Yes/Yes→ New. S:Old ←No/No→ New. W:Add. Z:Discontinued. F:Interchangeable by set. K:Q'ty Change

++ CONTINUE ++

Copyright (C) YANMAR GLOBAL CS CO., LTD. All RightsReserved.

# Fig.11. FUEL INJECTION PUMP

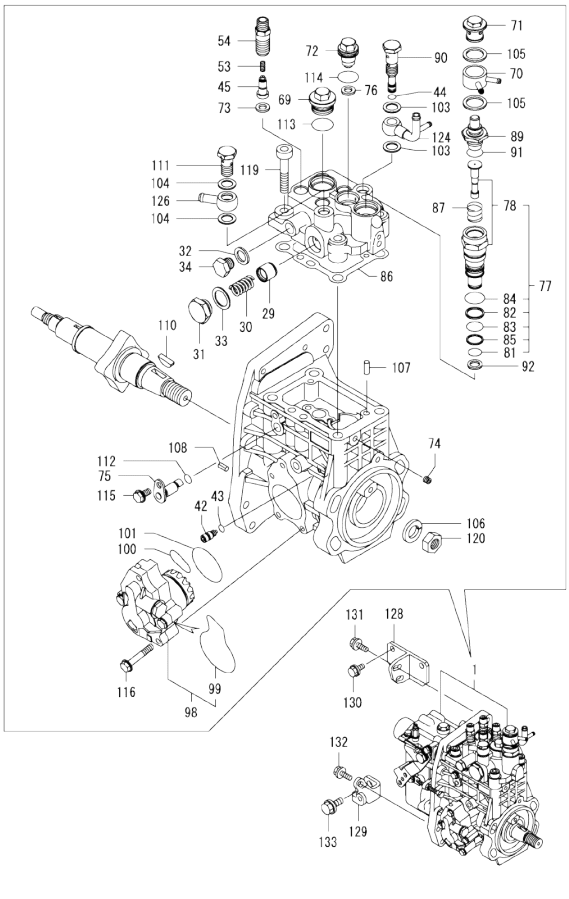


Remarks
(1) REPAIR PART.



(A)=4TNV94L-XDB (D)=
(B)= (E)=
(C)= (F)=

| No. | Lev. | Parts No. | Description | Q'ty (A) | (B) | (C) | (D) | (E) | (F) | I | R |
|---|---|---|---|---|---|---|---|---|---|---|---|
| 115 | 2 | 26106-060102 | BOLT, M6X 10 PLATED | 1 | | | | | | | |
| 116 | 2 | 26106-060352 | BOLT, M6X 35 PLATED | 4 | | | | | | | |
| 119 | 2 | 26450-100452 | BOLT, M10X 45 | 4 | | | | | | | |
| 120 | 2 | 26776-180002 | NUT, LOCK M18 | 1 | | | | | | | |
| 124 | 2 | 158552-51670 | JOINT, OVER FLOW | 1 | | | | | | | |
| 126 | 2 | 129916-59020 | JOINT, PIPE 12 | 1 | | | | | | | |
| 128 | 1 | 129907-01950 | RETAINER, PUMP | 1 | | | | | | | |
| 129 | 1 | 129906-01960 | RETAINER, PUMP | 1 | | | | | | | |
| 130 | 1 | 26106-080162 | BOLT, M8X 16 PLATED | 2 | | | | | | | |
| 131 | 1 | 26106-080222 | BOLT, M8X 22 PLATED | 2 | | | | | | | |
| 132 | 1 | 26106-080222 | BOLT, M8X 22 PLATED | 1 | | | | | | | |
| 133 | 1 | 26106-100202 | BOLT, M10X 20 PLATED | 1 | | | | | | | |

N:Old ←Yes/No→ New. Q:Old ←No/Yes→ New, R:Old ←Yes/Yes→ New. S:Old ←No/No→ New. W:Add. Z:Discontinued. F:Interchangeable by set. K:Q'ty Change

Copyright (C) YANMAR GLOBAL CS CO., LTD. All RightsReserved.

# Fig.12. FUEL INJECTION VALVE

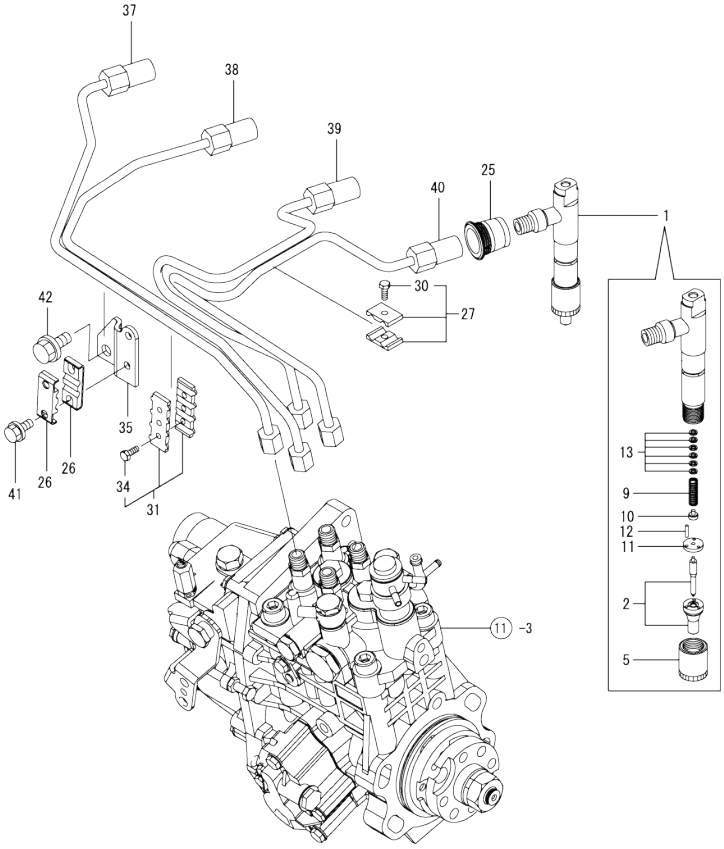




(A)=4TNV94L-XDB (D)=
(B)= (E)=
(C)= (F)=

| No. | Lev. | Parts No. | Description | Q'ty (A) | (B) | (C) | (D) | (E) | (F) | I | R |
|---|---|---|---|---|---|---|---|---|---|---|---|
| 1 | 1 | 729906-53100 | FUEL INJECTOR ASSY | 4 | | | | | | | |
| 2 | 2 | 129906-53000 | NOZZLE ASSY, F.I. | 4 | | | | | | | |
| 5 | 2 | 114250-53080 | NUT, NOZZLE | 4 | | | | | | | |
| 9 | 2 | 114250-53120 | SPRING, NOZZLE | 4 | | | | | | | |
| 10 | 2 | 114250-53130 | SEAT, SPRING | 4 | | | | | | | |
| 11 | 2 | 114250-53140 | SPACER | 4 | | | | | | | |
| 12 | 2 | 114250-53210 | PIN | 8 | | | | | | | |
| 13 | 2 | 114250-53400 | SHIM SET | 4 | | | | | | | |
| 25 | 1 | 123907-11601 | SEAL, PIPE | 4 | | | | | | | |
| 26 | 1 | 122780-59100 | RETAINER | 2 | | | | | | | |
| 27 | 1 | 119305-59120 | RETAINER, PIPE | 1 | | | | | | | |
| 30 | 2 | 129150-59131 | BOLT, M4X14 | 1 | | | | | | | |
| 31 | 1 | 129550-59120 | RETAINER, PIPE | 1 | | | | | | | |
| 34 | 2 | 129150-59131 | BOLT, M4X14 | 2 | | | | | | | |
| 35 | 1 | 129907-59710 | SUPPORT | 1 | | | | | | | |
| 37 | 1 | 129907-59810 | PIPE ASSY, INJECTION | 1 | | | | | | | |
| 38 | 1 | 129907-59820 | PIPE ASSY, INJECTION | 1 | | | | | | | |
| 39 | 1 | 129907-59830 | PIPE ASSY, INJECTION | 1 | | | | | | | |
| 40 | 1 | 129907-59840 | PIPE ASSY, INJECTION | 1 | | | | | | | |
| 41 | 1 | 26106-060162 | BOLT, M6X 16 PLATED | 2 | | | | | | | |
| 42 | 1 | 26106-080182 | BOLT, M8X 18 PLATED | 1 | | | | | | | |

N:Old ◄Yes/No► New. Q:Old ◄No/Yes► New. R:Old ◄Yes/Yes► New. S:Old ◄No/No► New. W:Add. Z:Discontinued. F:Interchangeable by set. K:Q'ty Change

Copyright (C) YANMAR GLOBAL CS CO., LTD. All RightsReserved.

# Fig.13. FUEL LINE



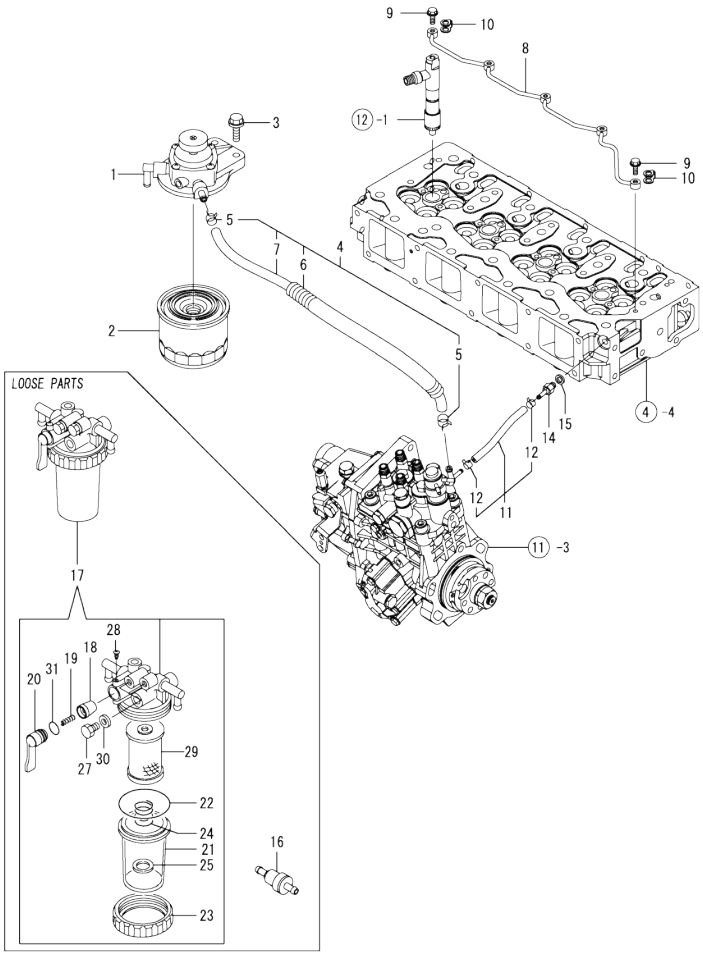


(A)=4TNV94L-XDB
(B)=
(C)=
(D)=
(E)=
(F)=

| No. | Lev. | Parts No. | Description | Q'ty (A) | (B) | (C) | (D) | (E) | (F) | I | R |
|---|---|---|---|---|---|---|---|---|---|---|---|
| 1 | 1 | 119802-55610 | BRACKET, FILTER | 1 | | | | | | | |
| 2 | 1 | 119802-55800 | FILTER, FUEL | 1 | | | | | | | |
| 3 | 1 | 26106-080302 | BOLT, M8X 30 PLATED | 2 | | | | | | | |
| 4 | 1 | 129457-59010 | HOSE ASSY, FUEL | 1 | | | | | | | |
| 5 | 2 | 124766-59050 | CLAMP, HOSE 11.5 | 2 | | | | | | | |
| 6 | 2 | 129957-59120 | TUBE, CORRUGATED 15 | 1 | | | | | | | |
| 7 | 2 | 105025-59750 | HOSE, FUEL | 1 | | | | | | | |
| 8 | 1 | 129907-59140 | PIPE ASSY, RETURN | 1 | | | | | | | |
| 9 | 1 | 123907-59540 | BOLT, PIPE JOINT M6 | 5 | | | | | | | |
| 10 | 1 | 123907-59550 | GASKET | 5 | | | | | | | |
| 11 | 1 | 129486-59551 | HOSE ASSY, RETURN | 1 | | | | | | | |
| 12 | 2 | 124722-59050 | CLAMP, HOSE 9 | 2 | | | | | | | |
| 14 | 1 | 123907-59560 | JOINT, HOSE | 1 | | | | | | | |
| 15 | 1 | 22190-080002 | WASHER, SEAL 6 | 1 | | | | | | | |
| 16 | 1 | 119802-59950 | VALVE, CHECK | 1 | | | | | | | |
| 17 | 1 | 129335-55700 | SEPARATOR ASSY,WATER | 1 | | | | | | | |
| 18 | 2 | 104200-55321 | VALVE, TAPER | 1 | | | | | | | |
| 19 | 2 | 104200-55330 | SPRING, FUEL VALVE | 1 | | | | | | | |
| 20 | 2 | 104200-55341 | HANDLE, COCK | 1 | | | | | | | |
| 21 | 2 | 124064-55510 | CUP, FUEL STARINER | 1 | | | | | | | |
| 22 | 2 | 102103-55520 | O-RING | 1 | | | | | | | |
| 23 | 2 | 110250-55610 | RING, CUP RETAINING | 1 | | | | | | | |
| 24 | 2 | 121257-55720 | SPRING, FILTER | 1 | | | | | | | |
| 25 | 2 | 121257-55731 | FLOAT | 1 | | | | | | | |
| 27 | 2 | 101720-55750 | PLUG, HEXAGON M6 | 2 | | | | | | | |
| 28 | 2 | 104200-55750 | SCREW, PAN M4 | 1 | | | | | | | |
| 29 | 2 | 171081-55910 | FILTER, FUEL | 1 | | | | | | | |
| 30 | 2 | 23418-060000 | GASKET, 6X1.0 | 2 | | | | | | | |
| 31 | 2 | 24311-240100 | O-RING, 1AP10A | 1 | | | | | | | |

N:Old ←Yes/No→ New. Q:Old ←No/Yes→ New. R:Old ←Yes/Yes→ New. S:Old ←No/No→ New. W:Add. Z:Discontinued. F:Interchangeable by set. K:Q'ty Change

Copyright (C) YANMAR GLOBAL CS CO., LTD. All RightsReserved.

# Fig.14. STARTING MOTOR

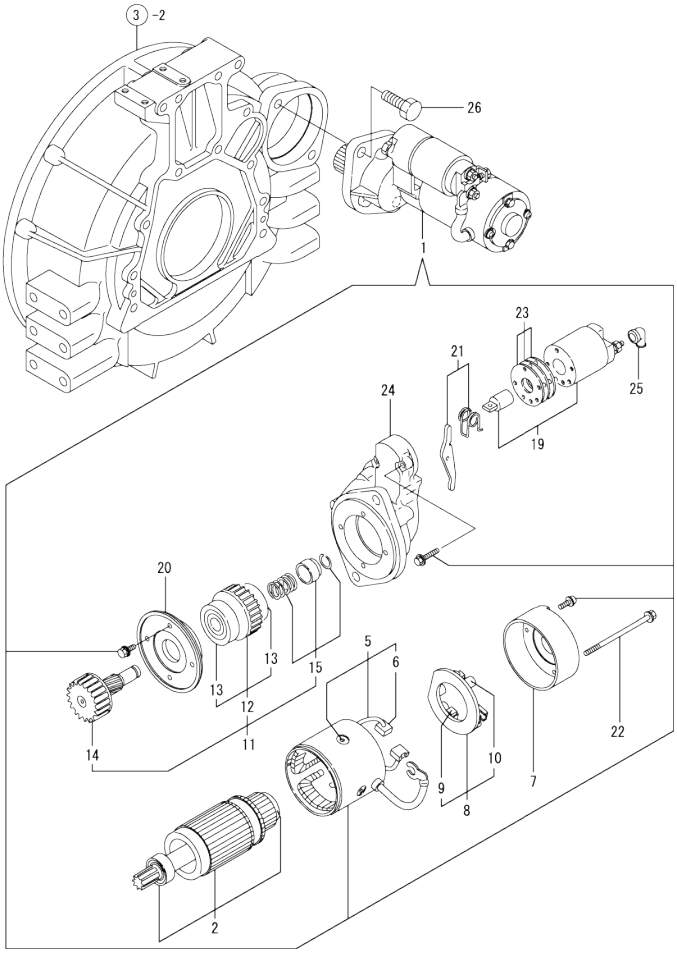




(A)=4TNV94L-XDB (D)=
(B)= (E)=
(C)= (F)=

| No. | Lev. | Parts No. | Description | Q'ty (A) | (B) | (C) | (D) | (E) | (F) | I | R |
|---|---|---|---|---|---|---|---|---|---|---|---|
| 1 | 1 | 123900-77010 | STARTER ASSY | 1 | | | | | | | |
| 2 | 2 | 123900-77400 | ARMATURE ASSY | 1 | | | | | | | |
| 5 | 2 | 123900-77440 | COIL ASSY, FIELD | 1 | | | | | | | |
| 6 | 3 | 123900-77450 | BRUSH | 2 | | | | | | | |
| 7 | 2 | 123900-77460 | COVER | 1 | | | | | | | |
| 8 | 2 | 123900-77480 | HOLDER ASSY, BRUSH | 1 | | | | | | | |
| 9 | 3 | 123900-77450 | BRUSH | 2 | | | | | | | |
| 10 | 3 | 121254-77590 | SPRING, BRUSH | 4 | | | | | | | |
| 11 | 2 | 123900-77510 | PINION ASSY | 1 | | | | | | | |
| 12 | 3 | 123900-77520 | CLUTCH ASSY | 1 | | | | | | | |
| 13 | 4 | X2240610100 | BEARING, BALL | 2 | | | | | | | |
| 14 | 3 | 123900-77540 | SHAFT, PINION | 1 | | | | | | | |
| 15 | 3 | 119131-77550 | STOPPER SET, PINION | 1 | | | | | | | |
| 19 | 2 | 129900-77591 | SWITCH ASSY, MAGNET | 1 | | | | | | | |
| 20 | 2 | 123900-77610 | RETAINER, BEARING | 1 | | | | | | | |
| 21 | 2 | 129900-77620 | LEVER SET | 1 | | | | | | | |
| 22 | 2 | 123900-77640 | BOLT, THROUGH | 2 | | | | | | | |
| 23 | 2 | 123900-77650 | COVER KIT, DUST | 1 | | | | | | | |
| 24 | 2 | 123900-77710 | CASE, GEAR | 1 | | | | | | | |
| 25 | 2 | 171008-77750 | COVER, TERMINAL | 1 | | | | | | | |
| 26 | 1 | 26116-120302 | BOLT, M12X 30 PLATED | 2 | | | | | | | |

N:Old ←Yes/No→ New. Q:Old ←No/Yes→ New. R:Old ←Yes/Yes→ New. S:Old ←No/No→ New. W:Add. Z:Discontinued. F:Interchangeable by set. K:Q'ty Change

Copyright (C) YANMAR GLOBAL CS CO., LTD. All RightsReserved.

# Fig.15. GENERATOR



(A)=4TNV94L-XDB (D)=
(B)= (E)=
(C)= (F)=

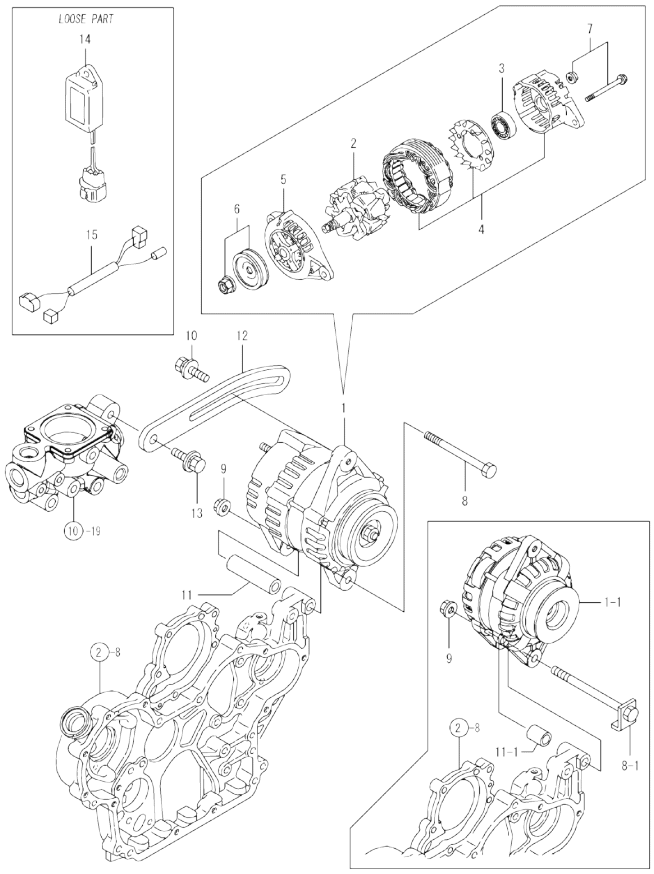


| No. | Lev. | Parts No. | Description | Q'ty (A) | (B) | (C) | (D) | (E) | (F) | I | R |
|---|---|---|---|---|---|---|---|---|---|---|---|
| 1 | 1 | 123900-77210 | ALTERNATOR, 12V-60A | 1 | | | | | | | |
| 1-1 | 1 | 129908-77210 | ALTERNATOR | 1 | | | | | | F | 1 |
| | (A=EB1677) | | | | | | | | | | |
| 2 | 2 | 123900-77700 | ROTOR ASSY | 1 | | | | | | Z | |
| | (A=EB1677) | | | | | | | | | | |
| 3 | 2 | 129612-77710 | BEARING, BALL | 1 | | | | | | Z | |
| | (A=EB1677) | | | | | | | | | | |
| 4 | 2 | 123900-77720 | BRACKET ASSY | 1 | | | | | | Z | |
| | (A=EB1677) | | | | | | | | | | |
| 5 | 2 | 123900-77730 | BRACKET ASSY | 1 | | | | | | Z | |
| | (A=EB1677) | | | | | | | | | | |
| 6 | 2 | 123900-77740 | PULLEY, GENERATOR | 1 | | | | | | Z | |
| | (A=EB1677) | | | | | | | | | | |
| 7 | 2 | 123900-77750 | SCREW KIT | 1 | | | | | | Z | |
| | (A=EB1677) | | | | | | | | | | |
| 8 | 1 | 26116-101202 | BOLT, M10X120 PLATED | 1 | | | | | | | |
| 8-1 | 1 | 129908-77220 | BOLT, STOPPER M10 | 1 | | | | | | F | 1 |
| | (A=EB1677) | | | | | | | | | | |
| 9 | 1 | 26306-100002 | NUT, M10 | 1 | | | | | | | |
| 10 | 1 | 119810-77340 | BOLT, ADJUST L=30 | 1 | | | | | | | |
| 11 | 1 | 129470-77340 | PIECE, DISTANCE | 1 | | | | | | | |
| 11-1 | 1 | 129908-77360 | PIECE, DISTANCE | 1 | | | | | | F | 1 |
| | (A=EB1677) | | | | | | | | | | |
| 12 | 1 | 129916-77300 | ADJUSTER, BELT | 1 | | | | | | | |
| 13 | 1 | 26014-080252 | BOLT, M8X 25 | 1 | | | | | | | |
| 14 | 1 | 129211-77920 | TIMER | 1 | | | | | | | |
| 15 | 1 | 129908-77940 | HARNESS | 1 | | | | | | F | 1 |
| | (A=EB1677) | | | | | | | | | | |

Remarks
(1)Interchangeable by simultaneous replacement with No.1-1, 8-1, 11-1, 15.

N:Old ←Yes/No→ New. Q:Old ←No/Yes→ New. R:Old ←Yes/Yes→ New. S:Old ←No/No→ New. W:Add. Z:Discontinued. F:Interchangeable by set. K:Q'ty Change

Copyright (C) YANMAR GLOBAL CS CO., LTD. All RightsReserved.

# Fig.16. GASKET SET



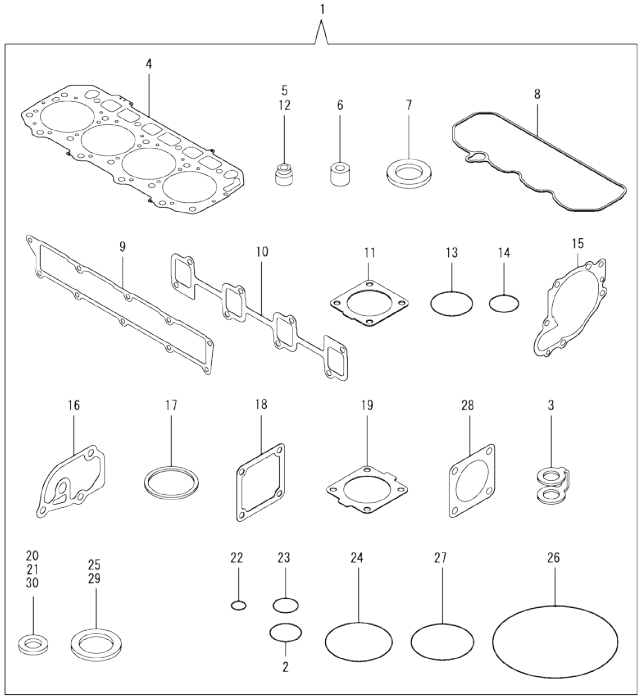


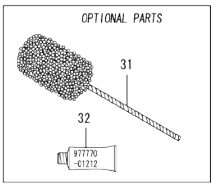


(A)=4TNV94L-XDB (D)=
(B)= (E)=
(C)= (F)=

| No. | Lev. | Parts No. | Description | Q'ty (A) | (B) | (C) | (D) | (E) | (F) | I | R |
|---|---|---|---|---|---|---|---|---|---|---|---|
| 1 | 1 | 729906-92640 | GASKET SET | 1 | | | | | | | 1 |
| 1-1 | 1 | 129906-92610 | GASKET SET | 1 | | | | | | N | 1 |
| | (A=*2009.12) | | | | | | | | | | |
| 2 | 2 | 24311-000150 | O-RING, 1AP15.0 | 1 | | | | | | | |
| 3 | 2 | 123907-59550 | GASKET | 5 | | | | | | | |
| 4 | 2 | 129906-01340 | GASKET, HEAD | 1 | | | | | | | |
| 4-1 | 2 | 129906-01350 | GASKET, HEAD | 1 | | | | | | N | |
| | (A=*2009.12) | | | | | | | | | | |
| 5 | 2 | 124160-11340 | SEAL, VALVE STEM | 8 | | | | | | | |
| 6 | 2 | 119802-11870 | PROTECTOR, NOZZLE | 4 | | | | | | | |
| 7 | 2 | 119625-11880 | SEAT, NOZZLE | 4 | | | | | | | |
| 8 | 2 | 129907-11310 | GASKET, BONNET | 1 | | | | | | | |
| 9 | 2 | 129907-12110 | GASKET, MANIFOLD | 1 | | | | | | | |
| 10 | 2 | 129900-13251 | GASKET, EXH.MANIFOLD | 1 | | | | | | | |
| 11 | 2 | 129930-13201 | GASKET, SILENCER | 1 | | | | | | | |
| 12 | 2 | 124950-11340 | SEAL, VALVE STEM | 8 | | | | | | | |
| 13 | 2 | 129900-32030 | O-RING, P20 | 2 | | | | | | | |
| 14 | 2 | 129900-32040 | O-RING, P14 | 1 | | | | | | | |
| 15 | 2 | 129900-42020 | GASKET, WATER PUMP | 1 | | | | | | | |
| 16 | 2 | 129900-49870 | GASKET, THERMOSTAT | 1 | | | | | | | |
| 17 | 2 | 121850-49550 | GASKET, THERMOSTAT | 1 | | | | | | | |
| 18 | 2 | 121850-77021 | GASKET, AIR HEATER | 1 | | | | | | | |
| 19 | 2 | 121850-49540 | GASKET, THERMOSTAT | 1 | | | | | | | |
| 20 | 2 | 23414-080000 | GASKET, 8X1.0 | 3 | | | | | | | |
| 21 | 2 | 124465-44950 | GASKET, 16 | 2 | | | | | | | |
| 22 | 2 | 24311-000070 | O-RING, 1AP7.0 | 1 | | | | | | | |
| 23 | 2 | 24311-000120 | O-RING, 1AP12.0 | 8 | | | | | | | |
| 24 | 2 | 24311-000320 | O-RING, 1AP32.0 | 3 | | | | | | | |
| 25 | 2 | 22190-080002 | WASHER, SEAL 6 | 7 | | | | | | | |
| 26 | 2 | 24341-000530 | O-RING, 1AS53.0 | 1 | | | | | | | |
| 27 | 2 | 24351-030750 | O-RING, 1A3075 | 1 | | | | | | | |
| 28 | 2 | 124240-01883 | GASKET | 1 | | | | | | | |
| 29 | 2 | 22190-220002 | WASHER, SEAL 22 | 1 | | | | | | | |
| 30 | 2 | 129150-49360 | GASKET | 1 | | | | | | Z | |
| | (A=FROM 1ST) | | | | | | | | | | |
| 31 | 1 | 129400-92450 | HONE, FLEX | 1 | | | | | | | 1 |
| 32 | 1 | 977770-01212 | GASKET, LIQUID | 1 | | | | | | | 1 |

Remarks
(1) OPTIONAL PART.

N:Old ◄Yes/No► New. Q:Old ◄No/Yes► New. R:Old ◄Yes/Yes► New. S:Old ◄No/No► New. W:Add. Z:Discontinued. F:Interchangeable by set. K:Q'ty Change

Copyright (C) YANMAR GLOBAL CS CO., LTD. All RightsReserved.

# Parts No. Index

| Parts No. | Fig. No. | Ref. No. |
|---|---|---|
| 101720-55750 | 13 | 27 |
| 102103-55520 | 13 | 22 |
| 104200-55321 | 13 | 18 |
| 104200-55330 | 13 | 19 |
| 104200-55341 | 13 | 20 |
| 104200-55750 | 13 | 28 |
| 105025-59750 | 13 | 7 |
| 105582-59150 | 10 | 26 |
| 110250-55610 | 13 | 23 |
| 114250-39450 | 9 | 12 |
| 114250-53080 | 12 | 5 |
| 114250-53120 | 12 | 9 |
| 114250-53130 | 12 | 10 |
| 114250-53140 | 12 | 11 |
| 114250-53210 | 12 | 12 |
| 114250-53400 | 12 | 13 |
| 119000-35140 | 9 | 3 |
| 119005-12060 | 5 | 8 |
| 119117-44760 | 10 | 17 |
| 119131-18320 | 6 | 4 |
| 119131-77550 | 14 | 15 |
| 119305-59120 | 12 | 27 |
| 119593-11301 | 4 | 28 |
| 119620-11180 | 4 | 16 |
| 119625-11880 | 4 | 26 |
| | 16 | 7 |
| 119640-01640 | 3 | 7 |
| 119640-61400 | 4 | 62 |
| 119802-11870 | 4 | 47 |
| | 16 | 6 |
| 119802-51590 | 11 | 77 |
| 119802-51600 | 11 | 78 |
| 119802-51680 | 11 | 82 |
| 119802-51690 | 11 | 83 |
| 119802-55610 | 13 | 1 |
| 119802-55800 | 13 | 2 |
| 119802-59950 | 13 | 16 |
| 119810-77340 | 15 | 10 |
| 120130-22301 | 8 | 22 |
| 121250-44901 | 10 | 38 |
| 121254-77590 | 14 | 10 |
| 121257-55720 | 13 | 24 |
| 121257-55731 | 13 | 25 |
| 121450-42450 | 10 | 37 |
| 121520-34810 | 9 | 2 |
| 121850-21130 | 8 | 12 |
| 121850-21290 | 8 | 5 |
| 121850-21920 | 8 | 6 |
| 121850-49540 | 10 | 21 |
| | 16 | 19 |

| Parts No. | Fig. No. | Ref. No. |
|---|---|---|
| 121850-49550 | 10 | 22 |
| | 16 | 17 |
| 121850-49800 | 10 | 24 |
| 121850-77021 | 5 | 5 |
| | 16 | 18 |
| 122780-59100 | 12 | 26 |
| 123900-13610 | 6 | 6 |
| 123900-13630 | 6 | 3 |
| 123900-25060 | 7 | 10 |
| 123900-77010 | 14 | 1 |
| 123900-77210 | 15 | 1 |
| 123900-77400 | 14 | 2 |
| 123900-77440 | 14 | 5 |
| 123900-77450 | 14 | 6 |
| | | 9 |
| 123900-77460 | 14 | 7 |
| 123900-77480 | 14 | 8 |
| 123900-77510 | 14 | 11 |
| 123900-77520 | 14 | 12 |
| 123900-77540 | 14 | 14 |
| 123900-77610 | 14 | 20 |
| 123900-77640 | 14 | 22 |
| 123900-77650 | 14 | 23 |
| 123900-77700 | 15 | 2 |
| 123900-77710 | 14 | 24 |
| 123900-77720 | 15 | 4 |
| 123900-77730 | 15 | 5 |
| 123900-77740 | 15 | 6 |
| 123900-77750 | 15 | 7 |
| 123907-03100 | 4 | 55 |
| 123907-03110 | 4 | 56 |
| 123907-03120 | 4 | 57 |
| 123907-03140 | 4 | 58 |
| 123907-11280 | 4 | 33 |
| 123907-11550 | 4 | 3 |
| 123907-11601 | 12 | 25 |
| 123907-11820 | 4 | 10 |
| 123907-11830 | 4 | 22 |
| 123907-25909 | 7 | 17 |
| 123907-39500 | 9 | 15 |
| 123907-59540 | 13 | 9 |
| 123907-59550 | 13 | 10 |
| | 16 | 3 |
| 123907-59560 | 13 | 14 |
| 124064-55510 | 13 | 21 |
| 124160-01751 | 2 | 35 |
| | 4 | 50 |
| 124160-11340 | 4 | 17 |
| | 16 | 5 |
| 124160-11360 | 4 | 65 |

| Parts No. | Fig. No. | Ref. No. |
|---|---|---|
| 124240-01871 | 2 | 41 |
| 124240-01883 | 2 | 42 |
| | 16 | 28 |
| 124465-44950 | 10 | 39 |
| | 16 | 21 |
| 124722-59050 | 10 | 44 |
| | | 47 |
| | 13 | 12 |
| 124766-59050 | 13 | 5 |
| 124950-11340 | 4 | 18 |
| | 16 | 12 |
| 129001-91810 | 2 | 24 |
| | | 25 |
| 129005-59830 | 9 | 17 |
| 129100-01580 | 2 | 5 |
| | 3 | 1 |
| 129150-02450 | 7 | 4 |
| 129150-11230 | 4 | 36 |
| | | 40 |
| 129150-11750 | 4 | 21 |
| | | 37 |
| | | 41 |
| 129150-14200 | 7 | 1 |
| 129150-25920 | 7 | 14 |
| 129150-35153 | 9 | 4 |
| 129150-49360 | 10 | 48 |
| | 16 | 30 |
| 129150-59131 | 12 | 30 |
| | | 34 |
| 129211-77920 | 15 | 14 |
| 129335-55700 | 13 | 17 |
| 129400-92450 | 16 | 31 |
| 129457-59010 | 13 | 4 |
| 129470-77340 | 15 | 11 |
| 129486-59551 | 13 | 11 |
| 129550-59120 | 12 | 31 |
| 129612-77710 | 15 | 3 |
| 129900-01200 | 1 | 31 |
| 129900-01250 | 1 | 5 |
| 129900-01850 | 2 | 44 |
| 129900-01870 | 2 | 45 |
| 129900-02020 | 1 | 7 |
| 129900-02340 | 1 | 34 |
| 129900-02410 | 1 | 10 |
| 129900-02930 | 1 | 28 |
| 129900-02940 | 1 | 37 |
| 129900-07900 | 4 | 1 |
| 129900-13200 | 6 | 1 |
| 129900-13251 | 6 | 2 |
| | 16 | 10 |

| Parts No. | Fig. No. | Ref. No. |
|---|---|---|
| 129900-14100 | 7 | 7 |
| 129900-21200 | 8 | 4 |
| 129900-21600 | 8 | 15 |
| 129900-23000 | 8 | 24 |
| 129900-23200 | 8 | 29 |
| 129900-23600 | 8 | 30 |
| 129900-23610 | 8 | 32 |
| 129900-23910 | 8 | 28 |
| 129900-25100 | 7 | 11 |
| 129900-32001 | 2 | 11 |
| 129900-32030 | 2 | 22 |
| | 9 | 5 |
| | 16 | 13 |
| 129900-32040 | 2 | 23 |
| | 16 | 14 |
| 129900-34800 | 9 | 1 |
| 129900-35000 | 9 | 6 |
| 129900-42020 | 10 | 11 |
| | 16 | 15 |
| 129900-49870 | 10 | 33 |
| | 16 | 16 |
| 129900-77591 | 14 | 19 |
| 129900-77620 | 14 | 21 |
| 129902-21000 | 8 | 1 |
| 129906-01340 | 1 | 32 |
| | 16 | 4 |
| 129906-01350 | 1 | 32 -2 |
| | 16 | 4 -1 |
| 129906-01960 | 11 | 129 |
| 129906-22050 | 8 | 18 |
| 129906-22080 | 8 | 16 |
| 129906-22090 | 8 | 16 -1 |
| 129906-22900 | 8 | 34 -1 |
| 129906-22910 | 8 | 34 -2 |
| 129906-49810 | 10 | 19 |
| 129906-51580 | 11 | 76 |
| 129906-53000 | 12 | 2 |
| 129906-92610 | 16 | 1 -1 |
| 129907-01190 | 1 | 33 |
| 129907-01331 | 1 | 32 -1 |
| 129907-01500 | 2 | 8 |
| 129907-01950 | 11 | 128 |
| 129907-03010 | 4 | 52 |
| 129907-03060 | 4 | 53 |
| 129907-03070 | 4 | 54 |
| 129907-11100 | 4 | 25 |
| 129907-11110 | 4 | 14 |
| 129907-11120 | 4 | 15 |
| 129907-11250 | 4 | 30 |
| 129907-11260 | 4 | 31 |

# Parts No. Index

| Parts No. | Fig. No. | Ref. No. |
|---|---|---|
| 129907-11270 | 4 | 32 |
| 129907-11310 | 4 | 61 |
| | 16 | 8 |
| 129907-11320 | 4 | 51 |
| 129907-11341 | 4 | 29 |
| 129907-11510 | 4 | 19 |
| 129907-11650 | 4 | 34 |
| 129907-11660 | 4 | 38 |
| 129907-11700 | 4 | 4 |
| 129907-11800 | 4 | 9 |
| 129907-11910 | 4 | 68 |
| 129907-11920 | 4 | 42 |
| 129907-11950 | 4 | 48 |
| 129907-12100 | 5 | 1 |
| 129907-12110 | 5 | 2 |
| | 16 | 9 |
| 129907-14400 | 7 | 2 |
| 129907-14581 | 7 | 3 |
| 129907-39060 | 9 | 13 |
| 129907-42000 | 10 | 1 |
| 129907-49610 | 10 | 41 |
| 129907-49620 | 10 | 45 |
| 129907-49710 | 10 | 42 |
| 129907-49720 | 10 | 46 |
| 129907-49730 | 10 | 23 |
| 129907-49750 | 10 | 43 |
| 129907-51340 | 11 | 54 |
| 129907-51560 | 11 | 72 |
| 129907-59140 | 13 | 8 |
| 129907-59710 | 12 | 35 |
| 129907-59810 | 12 | 37 |
| 129907-59820 | 12 | 38 |
| 129907-59830 | 12 | 39 |
| 129907-59840 | 12 | 40 |
| 129908-14581 | 7 | 3 -1 |
| 129908-77210 | 15 | 1 -1 |
| 129908-77220 | 15 | 8 -1 |
| 129908-77360 | 15 | 11 -1 |
| 129908-77940 | 15 | 15 |
| 129915-77050 | 5 | 6 |
| 129916-01790 | 3 | 5 |
| 129916-01800 | 2 | 4 |
| 129916-21590 | 8 | 13 |
| 129916-21610 | 8 | 10 |
| 129916-21620 | 8 | 9 |
| 129916-22950 | 8 | 36 -1 |
| 129916-42410 | 10 | 15 |
| 129916-44770 | 10 | 18 |
| 129916-49740 | 10 | 29 |
| 129916-59020 | 11 | 126 |

| Parts No. | Fig. No. | Ref. No. |
|---|---|---|
| 129916-77300 | 15 | 12 |
| 129927-42140 | 2 | 23 A |
| 129930-13201 | 6 | 5 |
| | 16 | 11 |
| 129951-01740 | 2 | 6 |
| 129953-01710 | 3 | 6 |
| 129953-25300 | 7 | 16 |
| 129957-59120 | 13 | 6 |
| 129960-21640 | 8 | 8 |
| 129980-49530 | 10 | 20 |
| 129981-01600 | 3 | 2 |
| 129981-44740 | 10 | 16 |
| 144626-51090 | 11 | 110 |
| 158552-51570 | 11 | 73 |
| 158552-51580 | 11 | 75 |
| 158552-51670 | 11 | 124 |
| 158552-51780 | 11 | 30 |
| 158552-51781 | 11 | 30 -1 |
| 158552-52100 | 11 | 98 |
| 158552-52310 | 11 | 100 |
| 158552-52400 | 11 | 101 |
| 158552-52500 | 11 | 99 |
| 158553-51551 | 11 | 70 |
| 158553-51630 | 11 | 87 |
| 158553-51640 | 11 | 89 |
| 158553-51660 | 11 | 91 |
| 158553-51670 | 11 | 81 |
| 158553-51680 | 11 | 92 |
| 158557-51570 | 11 | 74 |
| 158560-51300 | 11 | 45 |
| 158560-51600 | 11 | 86 |
| 158563-51281 | 11 | 43 |
| | | 44 |
| 158563-51330 | 11 | 53 |
| 158600-51270 | 11 | 42 |
| 158601-51550 | 11 | 69 |
| 158601-51570 | 11 | 71 |
| 158601-51650 | 11 | 90 |
| 158601-51770 | 11 | 29 |
| 158601-51790 | 11 | 31 |
| 171008-77750 | 14 | 25 |
| 171031-11741 | 2 | 37 |
| 171051-01921 | 1 | 6 |
| 171056-49120 | 10 | 40 |
| 171081-55910 | 13 | 29 |
| 22190-080002 | 9 | 18 |
| | | 20 |
| | | 22 |
| | 13 | 15 |
| | 16 | 25 |

| Parts No. | Fig. No. | Ref. No. |
|---|---|---|
| 22190-120002 | 11 | 32 |
| | | 103 |
| | | 104 |
| 22190-180002 | 11 | 33 |
| | | 105 |
| 22190-220002 | 3 | 10 |
| | 16 | 29 |
| 22217-180000 | 11 | 106 |
| 22252-000300 | 8 | 23 |
| 22312-050140 | 11 | 107 |
| 22351-050010 | 11 | 108 |
| 22351-060012 | 1 | 11 |
| 22512-070140 | 7 | 8 |
| | 8 | 7 |
| 22857-500100 | 4 | 63 |
| | | 64 |
| 23387-040800 | 10 | 27 |
| 23414-080000 | 10 | 28 |
| | | 34 |
| | 16 | 20 |
| 23418-060000 | 13 | 30 |
| 23857-030000 | 9 | 19 |
| 23857-060000 | 11 | 111 |
| 23876-020000 | 4 | 11 |
| 23876-030000 | 1 | 12 |
| | | 13 |
| | | 14 |
| | 4 | 12 |
| 23887-120002 | 11 | 34 |
| 24311-000070 | 2 | 26 |
| | 11 | 112 |
| | 16 | 22 |
| 24311-000120 | 4 | 27 |
| | | 66 |
| | 16 | 23 |
| 24311-000150 | 16 | 2 |
| 24311-000320 | 2 | 39 |
| | | 40 |
| | 4 | 67 |
| | 16 | 24 |
| 24311-240100 | 13 | 31 |
| 24341-000530 | 8 | 11 |
| | 16 | 26 |
| 24351-030750 | 2 | 27 |
| | 16 | 27 |
| 24356-010200 | 11 | 84 |
| | | 113 |
| 24356-020210 | 11 | 114 |
| 24372-000150 | 11 | 85 |
| 25153-004500 | 10 | 14 |

| Parts No. | Fig. No. | Ref. No. |
|---|---|---|
| 26014-080252 | 15 | 13 |
| 26106-060102 | 11 | 115 |
| 26106-060122 | 10 | 30 |
| 26106-060162 | 12 | 41 |
| 26106-060202 | 10 | 31 |
| 26106-060302 | 10 | 12 |
| 26106-060352 | 11 | 116 |
| 26106-060552 | 10 | 32 |
| 26106-080122 | 3 | 11 |
| | 9 | 11 |
| | | 21 |
| | | 23 |
| | 10 | 35 |
| 26106-080162 | 2 | 28 |
| | | 29 |
| | | 36 |
| | | 43 |
| | 4 | 2 |
| | 7 | 9 |
| | 11 | 130 |
| 26106-080182 | 12 | 42 |
| 26106-080202 | 2 | 30 |
| 26106-080222 | 11 | 131 |
| | | 132 |
| 26106-080302 | 13 | 3 |
| 26106-080352 | 5 | 7 |
| 26106-080402 | 2 | 31 |
| | | 32 |
| | 4 | 44 |
| 26106-080452 | 2 | 33 |
| 26106-080552 | 5 | 3 |
| | 7 | 15 |
| | 10 | 13 |
| 26106-080602 | 4 | 45 |
| | | 46 |
| | 10 | 36 |
| 26106-080852 | 5 | 4 |
| 26106-100202 | 11 | 133 |
| 26116-101202 | 15 | 8 |
| 26116-120302 | 14 | 26 |
| 26206-100352 | 3 | 4 |
| 26206-100702 | 3 | 3 |
| 26216-100302 | 2 | 10 |
| 26226-080222 | 4 | 43 |
| 26306-080002 | 4 | 49 |
| | 6 | 7 |
| 26306-100002 | 2 | 34 |
| | 15 | 9 |
| 26450-100452 | 11 | 119 |
| 26776-180002 | 11 | 120 |

# Parts No. Index

| Parts No. | Fig. No. | Ref. No. |
|---|---|---|
| 27241-300000 | 1 | 15 |
| 27241-400000 | 4 | 13 |
| 27310-070001 | 4 | 23 |
| 729900-02800 | 1 | 25 |
| 729906-01560 | 1 | 1 |
| 729906-22900 | 8 | 34 |
| 729906-22950 | 8 | 36 |
| 729906-51330 | 11 | 1 |
| 729906-53100 | 12 | 1 |
| 729906-92640 | 16 | 1 |
| 729907-01559 | 2 | 1 |
| 977770-01212 | 2 | 38 |
| | 3 | 12 |
| | 4 | 69 |
| | 16 | 32 |
| X2240610100 | 14 | 13 |

| Parts No. | Fig. No. | Ref. No. |
|---|---|---|

| Parts No. | Fig. No. | Ref. No. |
|---|---|---|

| Parts No. | Fig. No. | Ref. No. |
|---|---|---|