YANMAR

PARTS CATALOG

0CD50-M00020EN

Last update May., 2020

PREFACE

This parts catalog is the 1st edition of 4TNV94L-XDB24 for DOOSAN INFRACORE CO., LTD.

Published : November, 2013

Contents

0CD50-M00020

Fig. No.	Fig. Name
4TNV94L-XDB24	
1.	CYLINDER BLOCK
2.	GEAR HOUSING
3.	FLYWHEEL HOUSING & OIL SUMP
4.	CYLINDER HEAD & BONNET
5.	SUCTION MANIFOLD
6.	EXHAUST MANIFOLD
7.	CAMSHAFT & DRIVING GEAR
8.	CRANKSHAFT & PISTON
9.	LUB. OIL SYSTEM
10.	COOLING WATER SYSTEM
11.	FUEL INJECTION PUMP
12.	GOVERNOR
13.	FUEL INJECTION VALVE
14.	FUEL LINE
15.	STARTING MOTOR
16.	GENERATOR
17.	GASKET SET

Fig. No.	Fig. Name

Fig.1. CYLINDER BLOCK

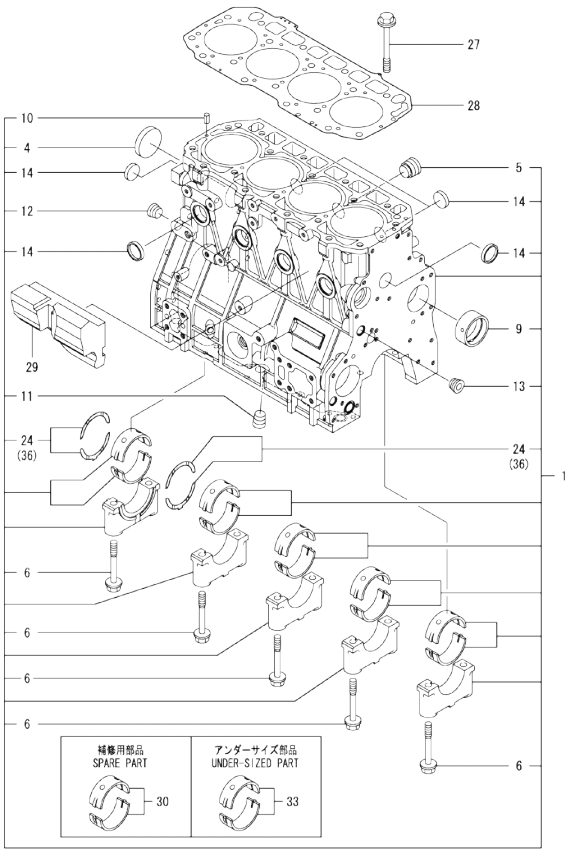

Remarks
(1)Spare part.
(2)Under-sized(U.S.=0.25)part.
(3)Over-sized(O.S.=0.25)part.

(A)=4TNV94L-XDB24 (D)=
(B)= (E)=
(C)= (F)=

No.	Lev.	Parts No.	Description	Q'ty (A)	(B)	(C)	(D)	(E)	(F)	I	R
1	1	729906-01561	BLOCK ASSY, CYLINDER	1							
4	2	129900-01250	PLUG, DISH TYPE 55	1							
5	2	171051-01921	PLUG, NPTF1	1							
6	2	129900-02020	BOLT, METAL CAP	10							
9	2	129900-02410	BUSH, CAMSHAFT	1							
10	2	22351-060012	PIN, SPRING 6.0X12	2							
11	2	23876-030000	PLUG, R03	1							
12	2	23876-030000	PLUG, R03	1							
13	2	23876-030000	PLUG, R03	1							
14	2	27241-300000	PLUG 30	8							
24	2	129900-02931	BEARING ASSY, THRUST	2							
27	1	129900-01200	BOLT, CYLINDER HEAD	18							
28	1	129906-01350	GASKET, HEAD	1							
29	1	129907-01190	SPACER	1							
30	1	729900-02801	BEARING, MAIN	5							1
33	1	129900-02341	BEARING ASSY, MAIN	5							2
36	1	129900-02941	BEARING, THRUST 0.25	2							3

N:Old ←Yes/No→ New. Q:Old ←No/Yes→ New, R:Old ←Yes/Yes→ New, S:Old ←No/No→ New. W:Add. Z:Discontinued. F:Interchangeable by set. K:Q'ty Change

Copyright (C) 2013 YANMAR GLOBAL CS CO., LTD. All RightsReserved.

Fig.2. GEAR HOUSING

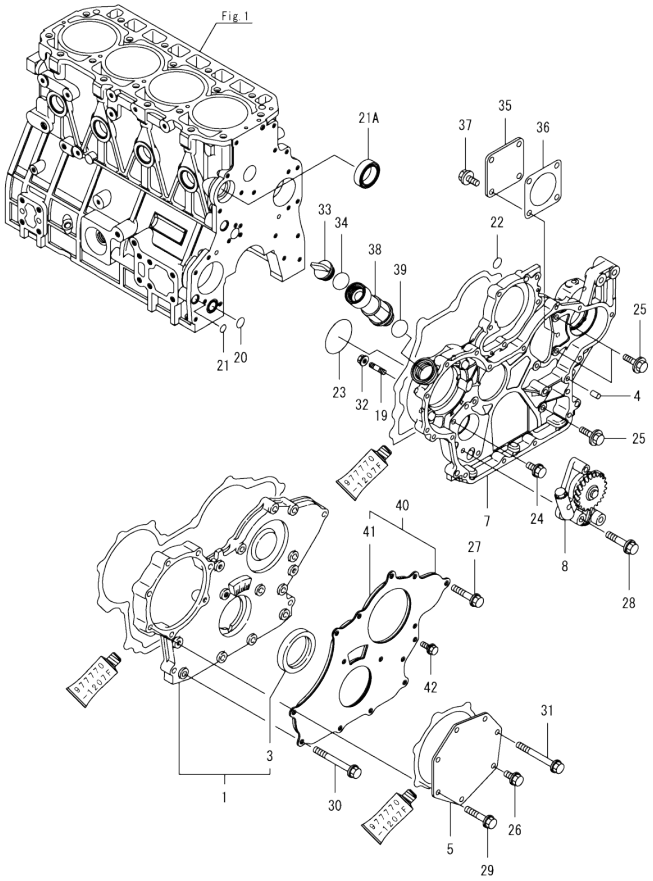

(A)=4TNV94L-XDB24 (D)=
(B)= (E)=
(C)= (F)=

No.	Lev.	Parts No.	Description	Q'ty (A)	(B)	(C)	(D)	(E)	(F)	I	R
1	1	729907-01559	COVER ASSY,GEAR CASE	1							
3	2	129916-01800	SEAL, OIL	1							
4	1	129100-01580	PIN, PARALLEL 8X16	4							
5	1	129951-01740	COVER	1							
7	1	129907-01500	CASE, GEAR	1							
8	1	129900-32001	PUMP ASSY, OIL	1							
19	1	26216-100302	STUD, M10X 30	4							
20	1	129900-32030	O-RING, P20	1							
21	1	129900-32040	O-RING, P14	1							
21A	1	129927-42140	GASKET, PUMP OUTLET	1						W	
	(A=EF9942)										
22	1	24311-000070	O-RING, 1AP7.0	1							
23	1	24351-030750	O-RING, 1A3075	1							
24	1	26106-080162	BOLT, M8X 16 PLATED	1							
25	1	26106-080202	BOLT, M8X 20 PLATED	3							
26	1	26106-080202	BOLT, M8X 20 PLATED	1							
27	1	26106-080402	BOLT, M8X 40 PLATED	5							
28	1	26106-080452	BOLT, M8X 45 PLATED	3							
29	1	26106-080452	BOLT, M8X 45 PLATED	5							
30	1	26106-080702	BOLT, M8X 70 PLATED	6							
31	1	26106-080752	BOLT, M8X 75 PLATED	1							
32	1	26306-100002	NUT, M10	4							
33	1	124160-01751	CAP, FILLER	1							
34	1	24311-000320	O-RING, 1AP32.0	1							
35	1	124240-01871	COVER, PUMP	1							
36	1	129C26-01890	GASKET, HO-P	1							
37	1	26106-080162	BOLT, M8X 16 PLATED	4							
38	1	171031-11741	PIPE	1							
39	1	24311-000320	O-RING, 1AP32.0	1							
40	1	129900-01850	COVER ASSY,GEAR CASE	1							
41	2	129900-01870	SPONGE, GEAR CASE	1							
42	1	26106-080162	BOLT, M8X 16 PLATED	3							

N:Old ←Yes/No→ New. Q:Old ←No/Yes→ New. R:Old ←Yes/Yes→ New. S:Old ←No/No→ New. W:Add. Z:Discontinued. F:Interchangeable by set. K:Q'ty Change

Copyright (C) 2013 YANMAR GLOBAL CS CO., LTD. All RightsReserved.

Fig.3. FLYWHEEL HOUSING & OIL SUMP

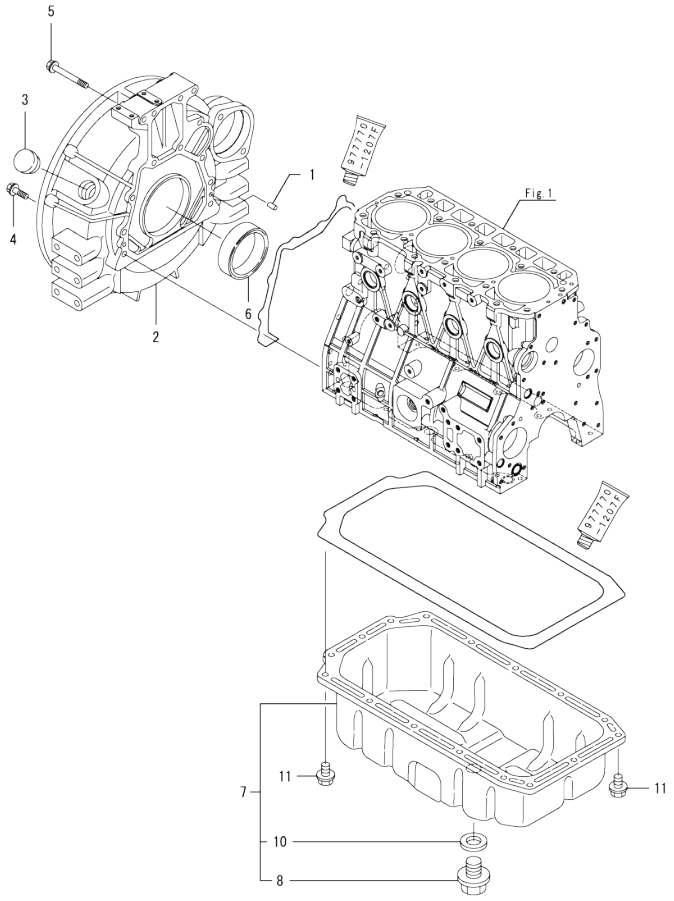

(A)=4TNV94L-XDB24 (D)=
(B)= (E)=
(C)= (F)=

No.	Lev.	Parts No.	Description	Q'ty (A)	(B)	(C)	(D)	(E)	(F)	I	R
1	1	129100-01580	PIN, PARALLEL 8X16	2							
2	1	129981-01600	HOUSING, FLYWHEEL	1							
3	1	119620-01750	CAP	1							
4	1	26206-100352	BOLT, M10X 35 PLATED	9							
5	1	26206-100702	BOLT, M10X 70 PLATED	4							
6	1	129916-01790	SEAL, D115/95XT11	1							
7	1	129916-01710	OIL PAN ASSY	1							
8	2	119640-01640	PLUG, DRAIN M22	1							
10	2	22190-220002	WASHER, SEAL 22	1							
11	1	26106-080122	BOLT, M8X 12 PLATED	16							

N:Old ←Yes/No→ New. Q:Old ←No/Yes→ New. R:Old ←Yes/Yes→ New. S:Old ←No/No→ New. W:Add. Z:Discontinued. F:Interchangeable by set. K:Q'ty Change

Copyright (C) 2013 YANMAR GLOBAL CS CO., LTD. All RightsReserved.

Fig.4. CYLINDER HEAD & BONNET

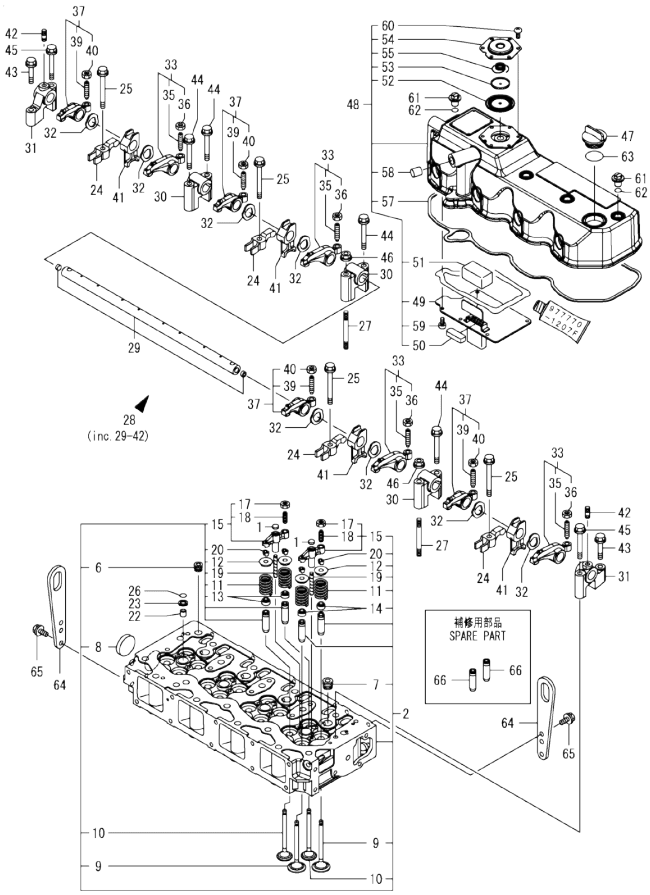

(A)=4TNV94L-XDB24
(B)=
(C)=
(D)=
(E)=
(F)=

No.	Lev.	Parts No.	Description	Q'ty (A)	(B)	(C)	(D)	(E)	(F)	I	R
1	1	123907-11550	SEAT, VALVE BRIDGE	8							
2	1	129907-11700	HEAD ASSY, CYLINDER	1							
6	2	23876-020000	PLUG, R02	1							
7	2	23876-030000	PLUG, R03	4							
8	2	27241-400000	PLUG, 40	1							
9	2	129907-11100	VALVE, SUCTION	8							
10	2	129907-11110	VALVE, EXHAUST	8							
11	2	129907-11120	SPRING, VALVE	16							
12	2	119620-11180	RETAINER, SPRING	16							
13	2	119803-11340	SEAL, VALVE STEM	8							
14	2	124160-11340	SEAL, VALVE STEM	8							
15	2	129907-11510	BRIDGE ASSY, VALVE	8							
17	3	129150-11750	NUT, M8	8							
18	3	123907-11830	ADJUSTER	8							
19	2	123907-11820	GUIDE, BRIDGE	8							
20	2	27310-070001	COTTER, 7	16							
22	1	119802-11870	PROTECTOR, NOZZLE	4							
23	1	119625-11880	SEAT, NOZZLE	4							
24	1	129907-11910	RETAINER, NOZZLE	4							
25	1	129907-11950	BOLT, M8X75	4							
26	1	24311-000120	O-RING, 1AP12.0	4							
27	1	119593-11301	BOLT, STUD M8X80	2							
28	1	129907-11341	SHAFT ASSY, ROCKER	1							
29	2	129907-11250	SHAFT, ROCKER ARM	1							
30	2	129907-11260	SUPPORT, ROCKER ARM	3							
31	2	129907-11270	SUPPORT, ROCKER ARM	2							
32	2	123907-11280	WASHER	8							
33	2	129907-11650	ARM ASSY, ROCKER	4							
35	3	129150-11230	SCREW, VALVE ADJUST	4							
36	3	129150-11750	NUT, M8	4							
37	2	129907-11660	ARM ASSY, ROCKER	4							
39	3	129150-11230	SCREW, VALVE ADJUST	4							
40	3	129150-11750	NUT, M8	4							
41	2	129907-11920	RETAINER, NOZZLE	4							
42	2	26226-080222	STUD, M8X 22	2							
43	1	26106-080402	BOLT, M8X 40 PLATED	2							
44	1	26106-080602	BOLT, M8X 60 PLATED	4							
45	1	26106-080602	BOLT, M8X 60 PLATED	2							
46	1	26306-080002	NUT, M8	2							
47	1	124160-01751	CAP, FILLER	1							
48	1	129907-11321	BONNET ASSY, HEAD	1							
49	2	129907-03011	PLATE, BAFFLE	1							
50	2	129907-03061	BAFFLE, BREATHER	1							
51	2	129907-03070	BAFFLE, BREATHER	1							
52	2	123907-03100	DIAPHRAGM	1							
53	2	123907-03110	PLATE	1							
54	2	123907-03120	PLATE, BREATHER	1							
55	2	123907-03140	SPRING, DIAPHRAGM	1							
57	2	129933-11310	GASKET, BONNET	1							
58	2	119640-61400	PLUG	1							
59	2	22857-500100	SCREW, 5X10	6							

Remarks
(1)Spare part.

N:Old ←Yes/No→ New. Q:Old ←No/Yes→ New. R:Old ←Yes/Yes→ New. S:Old ←No/No→ New. W:Add. Z:Discontinued. F:Interchangeable by set. K:Q'ty Change

++ CONTINUE ++

Copyright (C) 2013 YANMAR GLOBAL CS CO., LTD. All RightsReserved.

Fig.4. CYLINDER HEAD & BONNET

(A)=4TNV94L-XDB24
(B)=
(C)=
(D)=
(E)=
(F)=

No.	Lev.	Parts No.	Description	Q'ty (A)	(B)	(C)	(D)	(E)	(F)	I	R
60	2	22857-500100	SCREW, 5X10	6							
61	1	124160-11360	KNOB	4							
62	1	24311-000120	O-RING, 1AP12.0	4							
63	1	24311-000320	O-RING, 1AP32.0	1							
64	1	129900-07900	LIFTER, ENGINE	2							
65	1	26106-080162	BOLT, M8X 16 PLATED	4							
66	1	129907-11800	GUIDE, VALVE	16							1

Remarks
(1)Spare part.

N:Old ←Yes/No→ New. Q:Old ←No/Yes→ New. R:Old ←Yes/Yes→ New. S:Old ←No/No→ New. W:Add. Z:Discontinued. F:Interchangeable by set. K:Q'ty Change

Copyright (C) 2013 YANMAR GLOBAL CS CO., LTD. All RightsReserved.

0CD50-M00020 4TNV94L-XDB24

Fig.5. SUCTION MANIFOLD

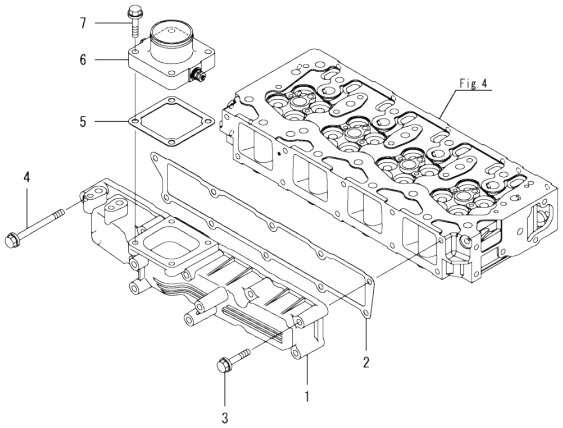

0CD50-M00020 Fig.5

(A)=4TNV94L-XDB24
(B)=
(C)=
(D)=
(E)=
(F)=

No.	Lev.	Parts No.	Description	Q'ty (A)	(B)	(C)	(D)	(E)	(F)	I	R
1	1	129907-12100	MANIFOLD, AIR INTAKE	1							
2	1	129907-12110	GASKET, MANIFOLD	1							
3	1	26106-080552	BOLT, M8X 55 PLATED	9							
4	1	26106-080852	BOLT, M8X 85 PLATED	1							
5	1	121850-77021	GASKET, AIR HEATER	1							
6	1	129953-77051	HEATER	1							
7	1	26106-080352	BOLT, M8X 35 PLATED	4							

N:Old ◄Yes/No► New. Q:Old ◄No/Yes► New. R:Old ◄Yes/Yes► New. S:Old ◄No/No► New. W:Add. Z:Discontinued. F:Interchangeable by set. K:Q'ty Change

Copyright (C) 2013 YANMAR GLOBAL CS CO., LTD. All RightsReserved.

0CD50-M00020 4TNV94L-XDB24

Fig.6. EXHAUST MANIFOLD

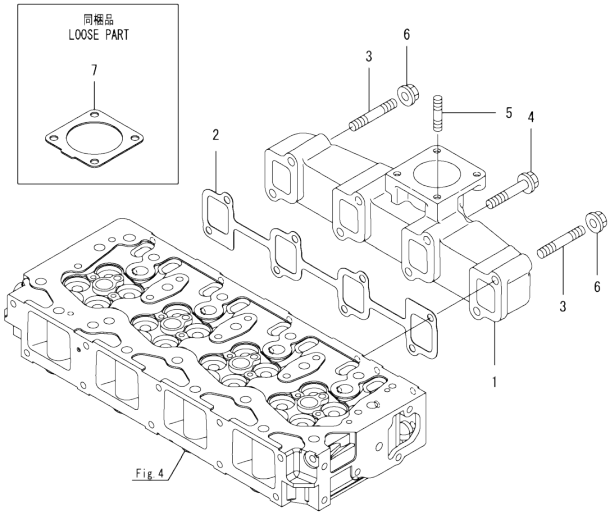

0CD50-M00020 Fig.6

(A)=4TNV94L-XDB24
(B)=
(C)=
(D)=
(E)=
(F)=

No.	Lev.	Parts No.	Description	Q'ty (A)	(B)	(C)	(D)	(E)	(F)	I	R
1	1	129900-13200	MANIFOLD, EXHAUST	1							
2	1	129900-13251	GASKET, EXH.MANIFOLD	1							
3	1	123900-13610	BOLT, STUD M8X80	2							
4	1	123900-13630	BOLT, M8X80	6							
5	1	119131-18320	BOLT, STUD M8X22	4							
6	1	26306-080002	NUT, M8	2							
7	1	129930-13201	GASKET, SILENCER	1							

N:Old ◄Yes/No► New. Q:Old ◄No/Yes► New. R:Old ◄Yes/Yes► New. S:Old ◄No/No► New. W:Add. Z:Discontinued. F:Interchangeable by set. K:Q'ty Change

Copyright (C) 2013 YANMAR GLOBAL CS CO., LTD. All RightsReserved.

Fig.7. CAMSHAFT & DRIVING GEAR

(A)=4TNV94L-XDB24
(B)=
(C)=
(D)=
(E)=
(F)=

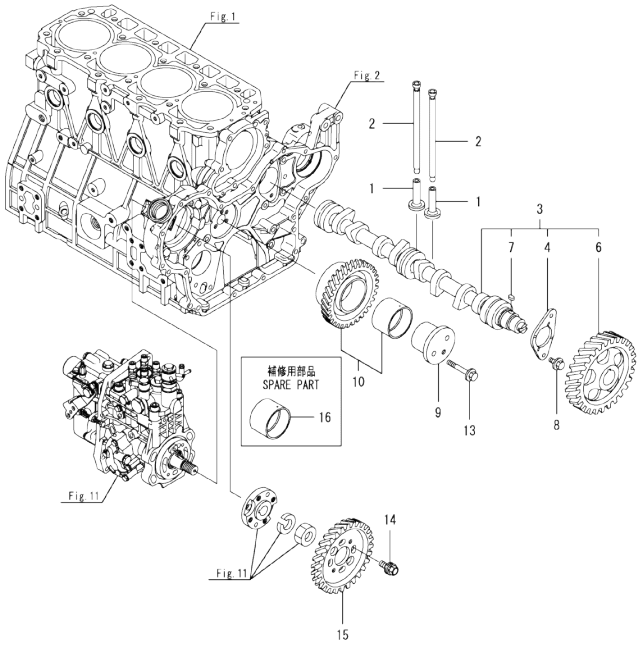

No.	Lev.	Parts No.	Description	Q'ty (A)	(B)	(C)	(D)	(E)	(F)	I	R
1	1	129150-14200	TAPPET	8							
2	1	129907-14400	PUSH-ROD	8							
3	1	129908-14581	CAMSHAFT ASSY	1							
4	2	129150-02450	BEARING, THRUST	1							
6	2	129900-14100	GEAR, CAMSHAFT	1							
7	2	22512-070140	KEY, 7X 14	1							
8	1	26106-080162	BOLT, M8X 16 PLATED	2							
9	1	123900-25060	SHAFT, IDLE GEAR	1							
10	1	129900-25100	GEAR ASSY, IDLE	1							
13	1	26106-080552	BOLT, M8X 55 PLATED	3							
14	1	129953-25300	BOLT	4							
15	1	129907-25900	GEAR, PUMP	1							
16	1	129150-25920	BUSH, IDLE GEAR	1							1

Remarks
(1)Spare part.

N:Old ←Yes/No→ New. Q:Old ←No/Yes→ New. R:Old ←Yes/Yes→ New. S:Old ←No/No→ New. W:Add. Z:Discontinued. F:Interchangeable by set. K:Q'ty Change

Copyright (C) 2013 YANMAR GLOBAL CS CO., LTD. All RightsReserved.

Fig.8. CRANKSHAFT & PISTON

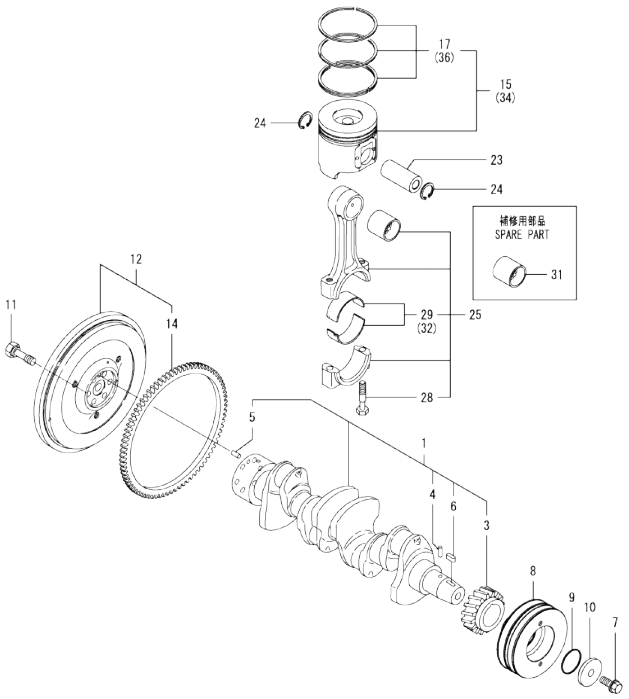

(A)=4TNV94L-XDB24
(B)=
(C)=
(D)=
(E)=
(F)=

No.	Lev.	Parts No.	Description	Q'ty (A)	(B)	(C)	(D)	(E)	(F)	I	R
1	1	129902-21000	CRANKSHAFT ASSY	1							
3	2	129900-21200	GEAR, CRANKSHAFT	1							
4	2	121850-21290	PIN	1							
5	2	121850-21920	PIN, PARALLEL 10X22	1							
6	2	22512-070140	KEY, 7X 14	1							
7	1	129916-21610	BOLT	1							
8	1	129933-21620	V-PULLEY, CRANKSHAFT	1							
9	1	129960-21930	GASKET, WASHER	1							
10	1	129960-21940	WASHER, V-PULLEY	1							
11	1	121850-21130	BOLT, FLYWHEEL	6							
12	1	129953-21560	FLYWHEEL ASSY	1							
14	2	129900-21600	GEAR, RING	1							
15	1	129906-22090	PISTON ASSY	4							
17	2	129906-22050	RING SET, PISTON	4							
23	1	120130-22301	PIN, PISTON	4							
24	1	22252-000300	RING, 30	8							
25	1	129900-23001	ROD ASSY, CONNECTING	4							
28	2	129900-23200	BOLT, CONNECTING ROD	8							
29	2	129900-23601	BEARING, CRANK PIN	4							
31	1	129900-23911	BEARING, PISTON PIN	4							1
32	1	129900-23611	BEARING ASSY, 0.25US	4							2
34	1	129906-22910	PISTON ASSY, 0.25 OS	4							3
36	2	129916-22950	RING SET, 0.25 OS	4							3

Remarks
(1)Spare part.
(2)Under-sized(U.S.=0.25)part.
(3)Over-sized(O.S.=0.25)part.

N:Old ←Yes/No→ New. Q:Old ←No/Yes→ New, R:Old ←Yes/Yes→ New. S:Old ←No/No→ New. W:Add. Z:Discontinued. F:Interchangeable by set. K:Q'ty Change

Copyright (C) 2013 YANMAR GLOBAL CS CO., LTD. All RightsReserved.

Fig.9. LUB. OIL SYSTEM

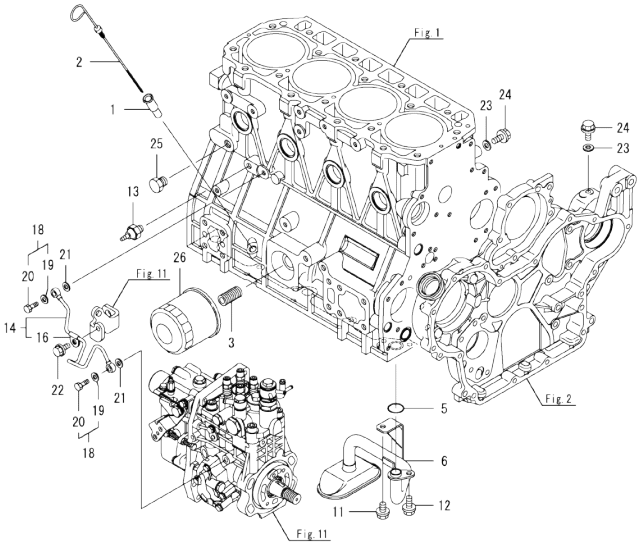

(A)=4TNV94L-XDB24
(B)=
(C)=
(D)=
(E)=
(F)=

No.	Lev.	Parts No.	Description	Q'ty (A)	(B)	(C)	(D)	(E)	(F)	I	R
1	1	121520-34810	GUIDE, DIPSTICK	1							
2	1	129906-34851	DIPSTICK	1							
3	1	119000-35140	BOLT, STUD FILTER	1							
5	1	129900-32030	O-RING, P20	1							
6	1	129953-35000	PIPE ASSY, OIL INLET	1							
11	1	26106-080122	BOLT, M8X 12 PLATED	1							
12	1	26106-080162	BOLT, M8X 16 PLATED	1							
13	1	114250-39450	SWITCH, HYDRAULIC	1							
14	1	129907-39061	PIPE ASSY, OIL	1							
16	2	123907-39500	RETAINER, PIPE	1							
18	1	129005-59830	BOLT ASSY, JOINT M8	2							
19	2	22190-080002	WASHER, SEAL 8	2							
20	2	23857-030000	BOLT, JOINT 3	2							
21	1	22190-080002	WASHER, SEAL 8	2							
22	1	26106-080122	BOLT, M8X 12 PLATED	1							
23	1	22190-080002	WASHER, SEAL 8	2							
24	1	26106-080122	BOLT, M8X 12 PLATED	2							
25	1	171056-49120	PLUG, DRAIN R1/4	1							
26	1	119005-35151	FILTER, D80X100	1							1

Remarks
(1)Spare part.

N:Old ←Yes/No→ New. Q:Old ←No/Yes→ New. R:Old ←Yes/Yes→ New. S:Old ←No/No→ New. W:Add. Z:Discontinued. F:Interchangeable by set. K:Q'ty Change

Copyright (C) 2013 YANMAR GLOBAL CS CO., LTD. All RightsReserved.

Fig.10. COOLING WATER SYSTEM

(A)=4TNV94L-XDB24
(B)=
(C)=
(D)=
(E)=
(F)=

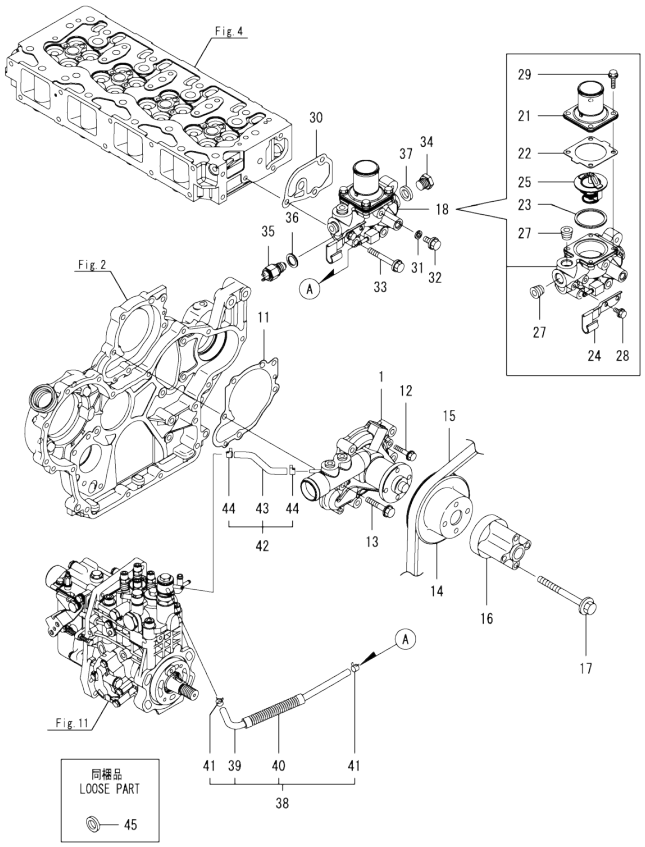

No.	Lev.	Parts No.	Description	Q'ty (A)	(B)	(C)	(D)	(E)	(F)	I	R
1	1	129907-42001	PUMP ASSY, WATER	1							
11	1	129900-42020	GASKET, WATER PUMP	1							
12	1	26106-060302	BOLT, M6X 30 PLATED	2							
13	1	26106-080552	BOLT, M8X 55 PLATED	5							
14	1	129916-42410	V-PULLEY, C.W.PUMP	1							
15	1	25153-004500	V-BELT, B45	1							
16	1	119117-44760	SPACER, FAN	1							
17	1	26106-080802	BOLT, M8X 80 PLATED	4							
18	1	129946-49810	CASE ASSY,THERMOSTAT	1							
21	2	129916-49530	COVER, THERMOSTAT	1							
22	2	121850-49540	GASKET, THERMOSTAT	1							
23	2	121850-49550	GASKET, THERMOSTAT	1							
24	2	129907-49730	RETAINER, PIPE	1							
25	2	121850-49801	THERMOSTAT, 82C	1							
27	2	23875-030000	PLUG, R03	2							
28	2	26106-060122	BOLT, M6X 12 PLATED	1							
29	2	26106-060202	BOLT, M6X 20 PLATED	4							
30	1	129900-49870	GASKET, THERMOSTAT	1							
31	1	23414-080000	GASKET, 8X1.0	1							
32	1	26106-080122	BOLT, M8X 12 PLATED	1							
33	1	26106-080602	BOLT, M8X 60 PLATED	3							
34	1	121450-42450	PLUG, M16	1							
35	1	121250-44901	SWITCH, THERMO 110	1							
36	1	124465-44950	GASKET, 16	1							
37	1	124465-44950	GASKET, 16	1							
38	1	129907-49610	HOSE ASSY, WATER	1							
39	2	129907-49710	HOSE, WATER	1							
40	2	129907-49750	TUBE, CORRUGATED	1							
41	2	124722-59050	CLAMP, HOSE 9	2							
42	1	129907-49620	HOSE ASSY, WATER	1							
43	2	129907-49720	HOSE, WATER	1							
44	2	124722-59050	CLAMP, HOSE 9	2							
45	1	129150-49360	GASKET	1							

N:Old ←Yes/No→ New. Q:Old ←No/Yes→ New. R:Old ←Yes/Yes→ New. S:Old ←No/No→ New. W:Add. Z:Discontinued. F:Interchangeable by set. K:Q'ty Change

Copyright (C) 2013 YANMAR GLOBAL CS CO., LTD. All RightsReserved.

Fig.11. FUEL INJECTION PUMP

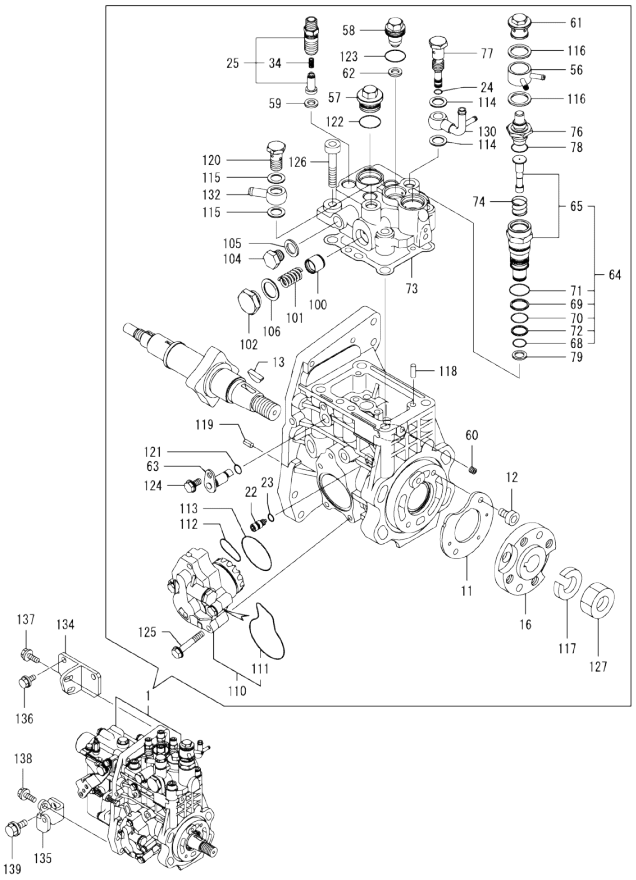

Remarks
(1)Governor(Fig.12)is incorporated in this Fuel Injection Pump (Ref.1).

(A)=4TNV94L-XDB24 (D)=
(B)= (E)=
(C)= (F)=

No.	Lev.	Parts No.	Description	Q'ty (A)	(B)	(C)	(D)	(E)	(F)	I	R
1	1	729906-51320	FIE ASSY	1							1
11	2	129928-51900	COVER	1							
12	2	129008-51920	BOLT, SOCKET M6X10	2							
13	2	144626-51090	FEATHER KEY, 5X19	1							
16	2	158563-51150	FLANGE	1							
22	2	158600-51270	STOPPER, TAPPET	1							
23	2	158563-51281	O-RING, 4D S6	1							
24	2	158563-51281	O-RING, 4D S6	1							
25	2	129509-51390	VALVE ASSY, DELIVERY	4							
34	3	158563-51330	SPRING, DELIVERY	4							
56	2	158553-51551	JOINT, COOLING WATER	1							
57	2	158601-51550	PLUG, M22	1							
58	2	129907-51560	PLUG, M16	1							
59	2	158552-51571	GASKET, PLUG	4							
60	2	158557-51570	PLUG, RACK	1							
61	2	158601-51570	PLUG	1							
62	2	129906-51580	GASKET, PLUG	1							
63	2	158552-51580	LIFTER, LINK	1							
64	2	119802-51590	TIMER ASSY	1							
65	3	119802-51600	TIMER ASSY	1							
68	3	158553-51670	O-RING	1							
69	3	119802-51680	RING, BACKUP	1							
70	3	119802-51690	O-RING	1							
71	3	24356-190200	O-RING, 4D19020	1							
72	3	24372-000150	RING, BACK UP T2P15	1							
73	2	158560-51600	GASKET	1							
74	2	158553-51630	SPRING, TIMER	1							
76	2	158553-51640	THERMOELEMENT	1							
77	2	158601-51650	JOINT, OVER FLOW	1							
78	2	158553-51660	O-RING, P14	1							
79	2	158553-51680	GASKET, TIMER	1							
100	2	158601-51770	PISTON, ACCUMLATOR	1							
101	2	158552-51781	SPRING, ACCUMULATOR	1							
102	2	158601-51790	PLUG	1							
104	2	158553-51930	PLUG, M12	1							
105	2	22190-120002	WASHER, SEAL 12	1							
106	2	22190-180002	WASHER, SEAL 18	1							
110	2	158552-52100	PUMP ASSY, FUEL FEED	1							
111	3	158552-52500	O-RING	1							
112	2	158552-52311	O-RING	1							
113	2	158552-52400	O-RING, 4E S42	1							
114	2	22190-120002	WASHER, SEAL 12	2							
115	2	22190-120002	WASHER, SEAL 12	2							
116	2	22190-180002	WASHER, SEAL 18	2							
117	2	22217-180000	WASHER, SPRING 18	1							
118	2	22312-050140	PIN, PARALLEL 5X14	2							
119	2	22351-050010	PIN, SPRING 5.0X10	2							
120	2	23857-060000	BOLT, JOINT 6	1							
121	2	24311-000070	O-RING, 1AP7.0	1							
122	2	24356-190200	O-RING, 4D19020	1							
123	2	24356-240210	O-RING, 4D24021	1							

N:Old $\xleftarrow[\text{No}]{\text{Yes}}$ New. Q:Old $\xleftarrow[\text{Yes}]{\text{No}}$ New. R:Old $\xleftarrow[\text{Yes}]{\text{Yes}}$ New. S:Old $\xleftarrow[\text{No}]{\text{No}}$ New. W:Add. Z:Discontinued. F:Interchangeable by set. K:Q'ty Change

++ CONTINUE ++

Copyright (C) 2013 YANMAR GLOBAL CS CO., LTD. All RightsReserved.

Fig.11. FUEL INJECTION PUMP

(A)=4TNV94L-XDB24
(B)=
(C)=
(D)=
(E)=
(F)=

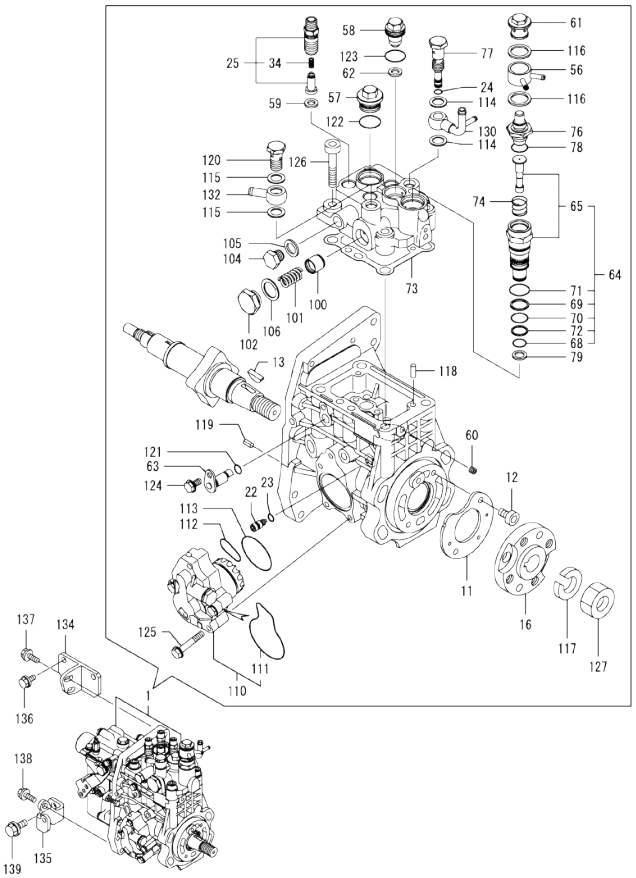

No.	Lev.	Parts No.	Description	Q'ty (A)	(B)	(C)	(D)	(E)	(F)	I	R
124	2	26106-060102	BOLT, M6X 10 PLATED	1							
125	2	26106-060352	BOLT, M6X 35 PLATED	4							
126	2	26450-100452	BOLT, M10X 45	4							
127	2	26776-180002	NUT, LOCK M18	1							
130	2	158552-51670	JOINT, OVER FLOW	1							
132	2	129916-59020	JOINT, PIPE 12	1							
134	1	129907-01950	RETAINER, PUMP	1							
135	1	129907-01960	RETAINER, PUMP	1							
136	1	26106-080162	BOLT, M8X 16 PLATED	2							
137	1	26106-080222	BOLT, M8X 22 PLATED	2							
138	1	26106-080222	BOLT, M8X 22 PLATED	1							
139	1	26106-100202	BOLT, M10X 20 PLATED	1							

Remarks
(1)Governor(Fig.12)is incorporated in this Fuel Injection Pump (Ref.1).

N:Old ←Yes/No→ New. Q:Old ←No/Yes→ New. R:Old ←Yes/Yes→ New. S:Old ←No/No→ New. W:Add. Z:Discontinued. F:Interchangeable by set. K:Q'ty Change

Copyright (C) 2013 YANMAR GLOBAL CS CO., LTD. All RightsReserved.

Fig.12. GOVERNOR

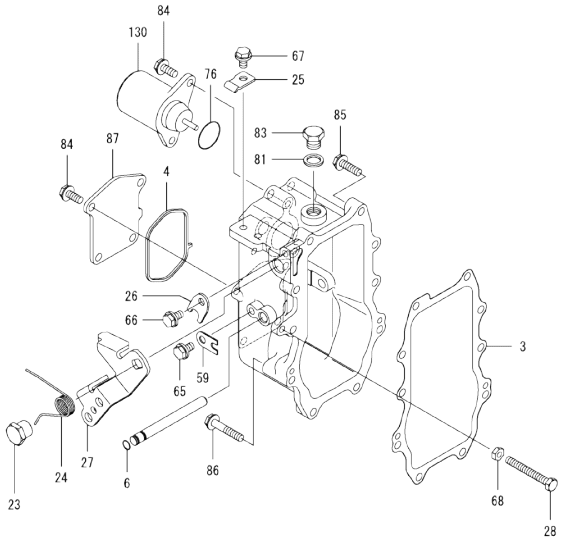

(A)=4TNV94L-XDB24 (D)=
(B)= (E)=
(C)= (F)=

No.	Lev.	Parts No.	Description	Q'ty (A)	(B)	(C)	(D)	(E)	(F)	I	R
3	2	158560-61050	GASKET	1							
4	2	158560-61071	GASKET	1							
6	2	129155-51280	O-RING, S6	1							
23	2	129255-61410	NUT, M8	1							
24	2	123944-61420	SPRING, LEVER	1							
25	2	123944-61430	RETAINER	1							
26	2	158560-61430	STOPPER, SHAFT	1							
27	2	158560-61442	LEVER, REGULATOR	1							
28	2	129155-61460	BOLT, LIMITING	1							
59	2	119660-61901	STOPPER, SHAFT	1							
65	2	26106-060102	BOLT, M6X 10 PLATED	1							
66	2	26106-060102	BOLT, M6X 10 PLATED	1							
67	2	26106-060102	BOLT, M6X 10 PLATED	1							
68	2	26756-060002	NUT, LOCK M6	1							
76	2	158552-61900	O-RING	1							
81	2	22190-160002	WASHER, SEAL 16	1							
83	2	23887-160002	PLUG, 16	1							
84	2	26106-060142	BOLT, M6X 14 PLATED	6							
85	2	26106-060252	BOLT, M6X 25 PLATED	8							
86	2	26106-060402	BOLT, M6X 40 PLATED	2							
87	2	158560-61061	COVER, GOVERNOR CASE	1							
130	2	129612-77930	SOLENOID, STOP	1							

Remarks
*This figure(Governor)is incorporated in the Fuel Injection Pump (Fig.11).

N:Old ←Yes/No→ New. Q:Old ←No/Yes→ New. R:Old ←Yes/Yes→ New. S:Old ←No/No→ New. W:Add. Z:Discontinued. F:Interchangeable by set. K:Q'ty Change

Copyright (C) 2013 YANMAR GLOBAL CS CO., LTD. All RightsReserved.

Fig.13. FUEL INJECTION VALVE

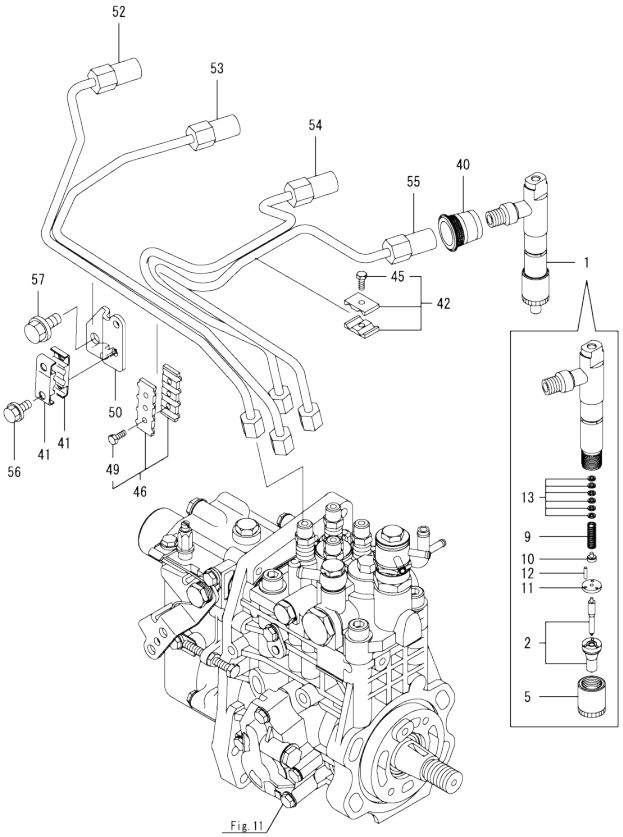

(A)=4TNV94L-XDB24 (D)=
(B)= (E)=
(C)= (F)=

No.	Lev.	Parts No.	Description	Q'ty (A)	(B)	(C)	(D)	(E)	(F)	I	R
1	1	729906-53100	FUEL INJECTOR ASSY	4							
2	2	129906-53000	NOZZLE ASSY, F.I.	4							
5	2	114250-53080	NUT, NOZZLE	4							
9	2	114250-53120	SPRING, NOZZLE	4							
10	2	114250-53130	SEAT, SPRING	4							
11	2	114250-53140	SPACER	4							
12	2	114250-53210	PIN	8							
13	2	119803-53400	SHIM SET	4							
40	1	123907-11601	SEAL, PIPE	4							
41	1	122780-59100	RETAINER	2							
42	1	119305-59120	RETAINER, PIPE	1							
45	2	129150-59131	BOLT, M4X14	1							
46	1	129550-59120	RETAINER, PIPE	1							
49	2	129150-59131	BOLT, M4X14	2							
50	1	129907-59710	SUPPORT	1							
52	1	129907-59810	PIPE ASSY, INJECTION	1							
53	1	129907-59820	PIPE ASSY, INJECTION	1							
54	1	129907-59830	PIPE ASSY, INJECTION	1							
55	1	129907-59840	PIPE ASSY, INJECTION	1							
56	1	26106-060162	BOLT, M6X 16 PLATED	2							
57	1	26106-080182	BOLT, M8X 18 PLATED	1							

N:Old ◄Yes/No► New. Q:Old ◄No/Yes► New. R:Old ◄Yes/Yes► New. S:Old ◄No/No► New. W:Add. Z:Discontinued. F:Interchangeable by set. K:Q'ty Change

Copyright (C) 2013 YANMAR GLOBAL CS CO., LTD. All RightsReserved.

Fig.14. FUEL LINE

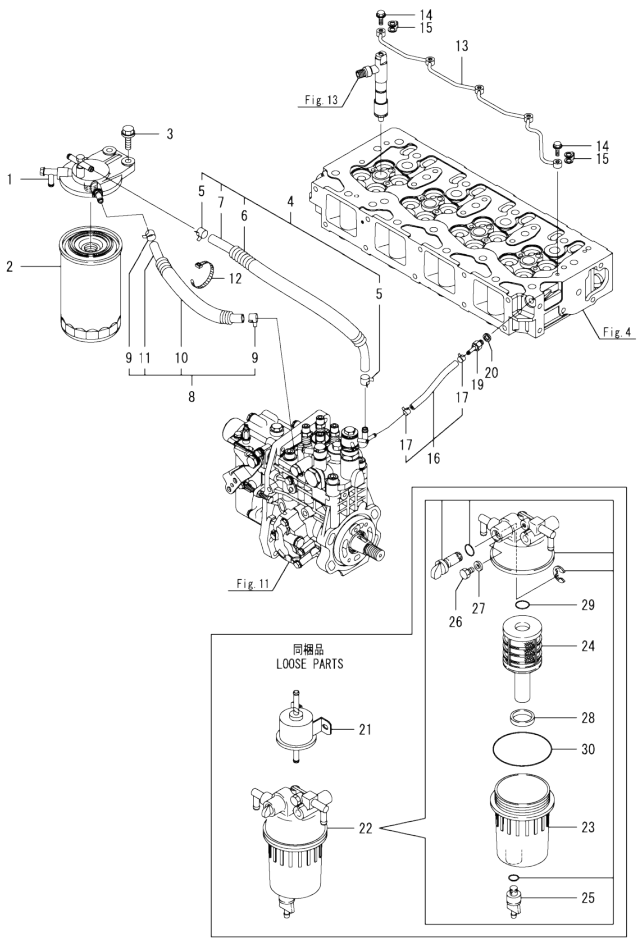

(A)=4TNV94L-XDB24 (D)=
(B)= (E)=
(C)= (F)=

No.	Lev.	Parts No.	Description	Q'ty (A)	(B)	(C)	(D)	(E)	(F)	I	R
1	1	129004-55612	BRACKET, FILTER	1							
2	1	129907-55801	FILTER, FUEL	1							
3	1	26106-080302	BOLT, M8X 30 PLATED	2							
4	1	129457-59010	HOSE ASSY, FUEL	1							
5	2	124766-59050	CLAMP, HOSE 11.5	2							
6	2	129957-59120	TUBE, CORRUGATED 15	1							
7	2	105025-59750	HOSE, FUEL	1							
8	1	129981-59010	HOSE ASSY, FUEL	1							
9	2	124766-59050	CLAMP, HOSE 11.5	2							
10	2	129950-59221	TUBE, CORRUGATED 15	1							
11	2	129980-59510	HOSE, FUEL	1							
12	1	121750-59890	BAND, NYLON	1							
13	1	129907-59140	PIPE ASSY, RETURN	1							
14	1	123907-59540	BOLT, PIPE JOINT M6	5							
15	1	123907-59550	GASKET	5							
16	1	129486-59551	HOSE ASSY, RETURN	1							
17	2	124722-59050	CLAMP, HOSE 9	2							
19	1	123907-59560	JOINT, HOSE	1							
20	1	22190-080002	WASHER, SEAL 8	1							
21	1	129907-52100	PUMP, FUEL FEED	1							
22	1	129242-55711	SEPARATOR ASSY,WATER	1							
23	2	129242-55720	CUP, SEPARATOR	1							
24	2	129242-55730	ELEMENT, FUEL	1							
25	2	129242-55740	PLUG, DRAIN	1							
26	2	129242-55750	VALVE, AIR VENT	1							
27	2	129242-55760	GASKET, PLUG	1							
28	2	129242-55770	FLOAT	1							
29	2	24311-000160	O-RING, 1AP16.0	1							
30	2	24321-000750	O-RING, 1AG75.0	1							

N:Old ←Yes/No→ New. Q:Old ←No/Yes→ New. R:Old ←Yes/Yes→ New. S:Old ←No/No→ New. W:Add. Z:Discontinued. F:Interchangeable by set. K:Q'ty Change

Copyright (C) 2013 YANMAR GLOBAL CS CO., LTD. All RightsReserved.

Fig.15. STARTING MOTOR

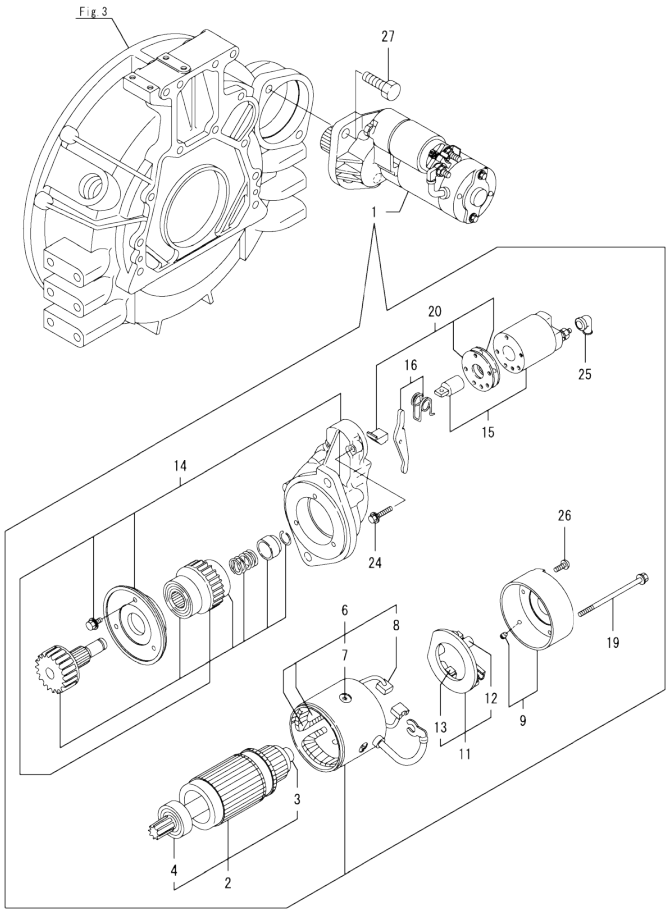

(A)=4TNV94L-XDB24 (D)=
(B)= (E)=
(C)= (F)=

No.	Lev.	Parts No.	Description	Q'ty (A)	(B)	(C)	(D)	(E)	(F)	I	R
1	1	119131-77011	STARTER ASSY, 23KW	1							
2	2	119131-77400	ARMATURE ASSY	1							
3	3	171008-77410	BEARING, BALL	1							
4	3	119131-77420	BEARING, BALL	1							
6	2	119131-77440	COIL ASSY, FIELD	1							
7	3	119260-77070	SCREW, CORE SET	4							
8	3	119131-77450	BRUSH	2							
9	2	119131-77460	COVER ASSY, REAR	1							
11	2	119131-77480	HOLDER ASSY, BRUSH	1							
12	3	119131-77490	SPRING, BRUSH	4							
13	3	119131-77500	BRUSH	2							
14	2	119131-77510	PINION	1							
15	2	119131-77590	SWITCH, MAGNET	1							
16	2	119131-77620	LEVER SET, SHIFT	1							
19	2	129400-77640	BOLT, THROUGH	2							
20	2	119131-77650	COVER KIT, DUST	1							
24	2	119131-77690	BOLT, COLLAR M 6X 37	2							
25	2	121254-77810	COVER, TERMINAL	1							
26	2	26557-040102	SCREW, M4X10	2							
27	1	26116-120252	BOLT, M12X 25 PLATED	2							

N:Old ←Yes/No→ New. Q:Old ←No/Yes→ New. R:Old ←Yes/Yes→ New. S:Old ←No/No→ New. W:Add. Z:Discontinued. F:Interchangeable by set. K:Q'ty Change

Copyright (C) 2013 YANMAR GLOBAL CS CO., LTD. All RightsReserved.

Fig.16. GENERATOR

(A)=4TNV94L-XDB24
(B)=
(C)=
(D)=
(E)=
(F)=

No.	Lev.	Parts No.	Description	Q'ty (A)	(B)	(C)	(D)	(E)	(F)	I	R
1	1	129908-77260	ALTERNATOR	1							
2	2	129908-77780	BEARING, BALL FR	1							
3	2	129908-77790	ROTOR	1							
4	2	129908-77800	BEARING, BALL RR	1							
5	2	129908-77810	RECTIFIER	1							
6	2	129908-77820	REGULATOR	1							
7	2	129908-77830	STATOR	1							
8	2	129908-77840	PROTECTOR	1							
9	1	129470-77340	PIECE, DISTANCE	1							
10	1	26116-101302	BOLT, M10X130 PLATED	1							
11	1	26306-100002	NUT, M10	1							
12	1	129916-77300	ADJUSTER, BELT	1							
13	1	119810-77340	BOLT, ADJUST L=30	1							
14	1	26014-080252	BOLT, M8X 25	1							
15	1	129211-77920	TIMER	1							

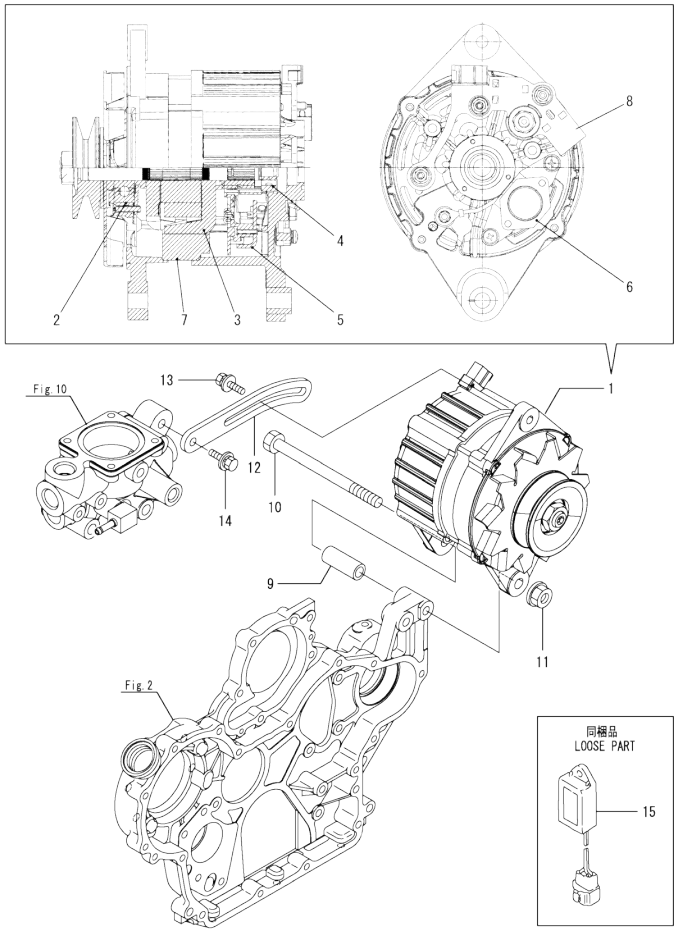

N:Old ←Yes/No→ New. Q:Old ←No/Yes→ New. R:Old ←Yes/Yes→ New. S:Old ←No/No→ New. W:Add. Z:Discontinued. F:Interchangeable by set. K:Q'ty Change

Copyright (C) 2013 YANMAR GLOBAL CS CO., LTD. All RightsReserved.

Fig.17. GASKET SET

(A)=4TNV94L-XDB24
(B)=
(C)=
(D)=
(E)=
(F)=

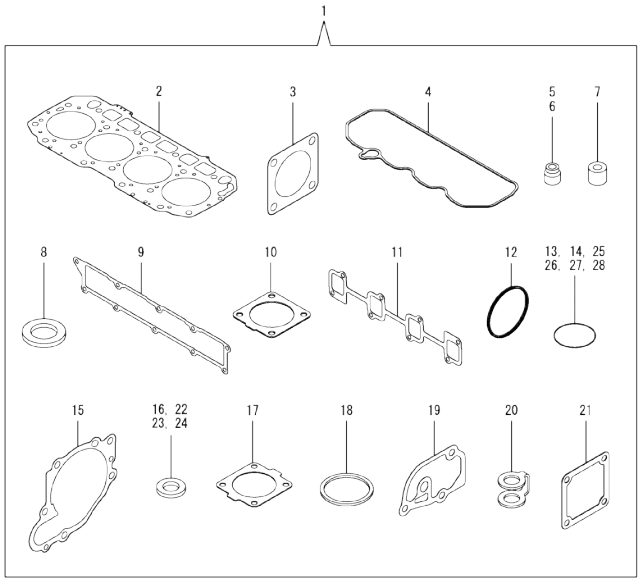

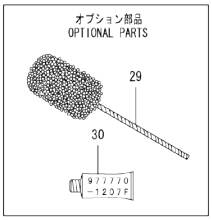

No.	Lev.	Parts No.	Description	Q'ty (A)	(B)	(C)	(D)	(E)	(F)	I	R
1	1	129906-92750	PACKING KIT	1							1
2	2	129906-01350	GASKET, HEAD	1							
3	2	129C26-01890	GASKET, HO-P	1							
4	2	129933-11310	GASKET, BONNET	1							
5	2	119803-11340	SEAL, VALVE STEM	8							
6	2	124160-11340	SEAL, VALVE STEM	8							
7	2	119802-11870	PROTECTOR, NOZZLE	4							
8	2	119625-11880	SEAT, NOZZLE	4							
9	2	129907-12110	GASKET, MANIFOLD	1							
10	2	129930-13201	GASKET, SILENCER	1							
11	2	129900-13251	GASKET, EXH.MANIFOLD	1							
12	2	129960-21930	GASKET, WASHER	1							
13	2	129900-32030	O-RING, P20	2							
14	2	129900-32040	O-RING, P14	1							
15	2	129900-42020	GASKET, WATER PUMP	1							
16	2	124465-44950	GASKET, 16	2							
17	2	121850-49540	GASKET, THERMOSTAT	1							
18	2	121850-49550	GASKET, THERMOSTAT	1							
19	2	129900-49870	GASKET, THERMOSTAT	1							
20	2	123907-59550	GASKET	5							
21	2	121850-77021	GASKET, AIR HEATER	1							
22	2	22190-080002	WASHER, SEAL 8	7							
23	2	22190-220002	WASHER, SEAL 22	1							
24	2	23414-080000	GASKET, 8X1.0	1							
25	2	24311-000070	O-RING, 1AP7.0	1							
26	2	24311-000120	O-RING, 1AP12.0	8							
27	2	24311-000320	O-RING, 1AP32.0	3							
28	2	24351-030750	O-RING, 1A3075	1							
29	1	129400-92440	HONE, FLEX	1							1
30	1	977770-1207F	GASKET.LIQUID	1							1

Remarks
(1)Optional parts.

N:Old ◄Yes/No► New. Q:Old ◄No/Yes► New. R:Old ◄Yes/Yes► New. S:Old ◄No/No► New. W:Add. Z:Discontinued. F:Interchangeable by set. K:Q'ty Change

Copyright (C) 2013 YANMAR GLOBAL CS CO., LTD. All RightsReserved.

Parts No. Index

Parts No.	Fig. No.	Ref. No.
105025-59750	14	7
114250-39450	9	13
114250-53080	13	5
114250-53120	13	9
114250-53130	13	10
114250-53140	13	11
114250-53210	13	12
119000-35140	9	3
119005-35151	9	26
119117-44760	10	16
119131-18320	6	5
119131-77011	15	1
119131-77400	15	2
119131-77420	15	4
119131-77440	15	6
119131-77450	15	8
119131-77460	15	9
119131-77480	15	11
119131-77490	15	12
119131-77500	15	13
119131-77510	15	14
119131-77590	15	15
119131-77620	15	16
119131-77650	15	20
119131-77690	15	24
119260-77070	15	7
119305-59120	13	42
119593-11301	4	27
119620-01750	3	3
119620-11180	4	12
119625-11880	4	23
	17	8
119640-01640	3	8
119640-61400	4	58
119660-61901	12	59
119802-11870	4	22
	17	7
119802-51590	11	64
119802-51600	11	65
119802-51680	11	69
119802-51690	11	70
119803-11340	4	13
	17	5
119803-53400	13	13
119810-77340	16	13
120130-22301	8	23
121250-44901	10	35
121254-77810	15	25
121450-42450	10	34
121520-34810	9	1

Parts No.	Fig. No.	Ref. No.
121750-59890	14	12
121850-21130	8	11
121850-21290	8	4
121850-21920	8	5
121850-49540	10	22
	17	17
121850-49550	10	23
	17	18
121850-49801	10	25
121850-77021	5	5
	17	21
122780-59100	13	41
123900-13610	6	3
123900-13630	6	4
123900-25060	7	9
123907-03100	4	52
123907-03110	4	53
123907-03120	4	54
123907-03140	4	55
123907-11280	4	32
123907-11550	4	1
123907-11601	13	40
123907-11820	4	19
123907-11830	4	18
123907-39500	9	16
123907-59540	14	14
123907-59550	14	15
	17	20
123907-59560	14	19
123944-61420	12	24
123944-61430	12	25
124160-01751	2	33
	4	47
124160-11340	4	14
	17	6
124160-11360	4	61
124240-01871	2	35
124465-44950	10	36
		37
	17	16
124722-59050	10	41
		44
	14	17
124766-59050	14	5
		9
129004-55612	14	1
129005-59830	9	18
129008-51920	11	12
129100-01580	2	4
	3	1

Parts No.	Fig. No.	Ref. No.
129150-02450	7	4
129150-11230	4	35
		39
129150-11750	4	17
		36
		40
129150-14200	7	1
129150-25920	7	16
129150-49360	10	45
129150-59131	13	45
		49
129155-51280	12	6
129155-61460	12	28
129211-77920	16	15
129242-55711	14	22
129242-55720	14	23
129242-55730	14	24
129242-55740	14	25
129242-55750	14	26
129242-55760	14	27
129242-55770	14	28
129255-61410	12	23
129400-77640	15	19
129400-92440	17	29
129457-59010	14	4
129470-77340	16	9
129486-59551	14	16
129509-51390	11	25
129550-59120	13	46
129612-77930	12	130
129900-01200	1	27
129900-01250	1	4
129900-01850	2	40
129900-01870	2	41
129900-02020	1	6
129900-02341	1	33
129900-02410	1	9
129900-02931	1	24
129900-02941	1	36
129900-07900	4	64
129900-13200	6	1
129900-13251	6	2
	17	11
129900-14100	7	6
129900-21200	8	3
129900-21600	8	14
129900-23001	8	25
129900-23200	8	28
129900-23601	8	29
129900-23611	8	32

Parts No.	Fig. No.	Ref. No.
129900-23911	8	31
129900-25100	7	10
129900-32001	2	8
129900-32030	2	20
	9	5
	17	13
129900-32040	2	21
	17	14
129900-42020	10	11
	17	15
129900-49870	10	30
	17	19
129902-21000	8	1
129906-01350	1	28
	17	2
129906-22050	8	17
129906-22090	8	15
129906-22910	8	34
129906-34851	9	2
129906-51580	11	62
129906-53000	13	2
129906-92750	17	1
129907-01190	1	29
129907-01500	2	7
129907-01950	11	134
129907-01960	11	135
129907-03011	4	49
129907-03061	4	50
129907-03070	4	51
129907-11100	4	9
129907-11110	4	10
129907-11120	4	11
129907-11250	4	29
129907-11260	4	30
129907-11270	4	31
129907-11321	4	48
129907-11341	4	28
129907-11510	4	15
129907-11650	4	33
129907-11660	4	37
129907-11700	4	2
129907-11800	4	66
129907-11910	4	24
129907-11920	4	41
129907-11950	4	25
129907-12100	5	1
129907-12110	5	2
	17	9
129907-14400	7	2
129907-25900	7	15

Parts No. Index

Parts No.	Fig. No.	Ref. No.
129907-39061	9	14
129907-42001	10	1
129907-49610	10	38
129907-49620	10	42
129907-49710	10	39
129907-49720	10	43
129907-49730	10	24
129907-49750	10	40
129907-51560	11	58
129907-52100	14	21
129907-55801	14	2
129907-59140	14	13
129907-59710	13	50
129907-59810	13	52
129907-59820	13	53
129907-59830	13	54
129907-59840	13	55
129908-14581	7	3
129908-77260	16	1
129908-77780	16	2
129908-77790	16	3
129908-77800	16	4
129908-77810	16	5
129908-77820	16	6
129908-77830	16	7
129908-77840	16	8
129916-01710	3	7
129916-01790	3	6
129916-01800	2	3
129916-21610	8	7
129916-22950	8	36
129916-42410	10	14
129916-49530	10	21
129916-59020	11	132
129916-77300	16	12
129927-42140	2	21 A
129928-51900	11	11
129930-13201	6	7
	17	10
129933-11310	4	57
	17	4
129933-21620	8	8
129946-49810	10	18
129950-59221	14	10
129951-01740	2	5
129953-21560	8	12
129953-25300	7	14
129953-35000	9	6
129953-77051	5	6
129957-59120	14	6

Parts No.	Fig. No.	Ref. No.
129960-21930	8	9
	17	12
129960-21940	8	10
129980-59510	14	11
129981-01600	3	2
129981-59010	14	8
129C26-01890	2	36
	17	3
144626-51090	11	13
158552-51571	11	59
158552-51580	11	63
158552-51670	11	130
158552-51781	11	101
158552-52100	11	110
158552-52311	11	112
158552-52400	11	113
158552-52500	11	111
158552-61900	12	76
158553-51551	11	56
158553-51630	11	74
158553-51640	11	76
158553-51660	11	78
158553-51670	11	68
158553-51680	11	79
158553-51930	11	104
158557-51570	11	60
158560-51600	11	73
158560-61050	12	3
158560-61061	12	87
158560-61071	12	4
158560-61430	12	26
158560-61442	12	27
158563-51150	11	16
158563-51281	11	23
		24
158563-51330	11	34
158600-51270	11	22
158601-51550	11	57
158601-51570	11	61
158601-51650	11	77
158601-51770	11	100
158601-51790	11	102
171008-77410	15	3
171031-11741	2	38
171051-01921	1	5
171056-49120	9	25
22190-080002	9	19
		21
		23
	14	20

Parts No.	Fig. No.	Ref. No.
22190-080002	17	22
22190-120002	11	105
		114
		115
22190-160002	12	81
22190-180002	11	106
		116
22190-220002	3	10
	17	23
22217-180000	11	117
22252-000300	8	24
22312-050140	11	118
22351-050010	11	119
22351-060012	1	10
22512-070140	7	7
	8	6
22857-500100	4	59
		60
23414-080000	10	31
	17	24
23857-030000	9	20
23857-060000	11	120
23875-030000	10	27
23876-020000	4	6
23876-030000	1	11
		12
		13
	4	7
23887-160002	12	83
24311-000070	2	22
	11	121
	17	25
24311-000120	4	26
		62
	17	26
24311-000160	14	29
24311-000320	2	34
		39
	4	63
	17	27
24321-000750	14	30
24351-030750	2	23
	17	28
24356-190200	11	71
		122
24356-240210	11	123
24372-000150	11	72
25153-004500	10	15
26014-080252	16	14
26106-060102	11	124

Parts No.	Fig. No.	Ref. No.
26106-060102	12	65
		66
		67
26106-060122	10	28
26106-060142	12	84
26106-060162	13	56
26106-060202	10	29
26106-060252	12	85
26106-060302	10	12
26106-060352	11	125
26106-060402	12	86
26106-080122	3	11
	9	11
		22
		24
	10	32
26106-080162	2	24
		37
		42
	4	65
	7	8
	9	12
	11	136
26106-080182	13	57
26106-080202	2	25
		26
26106-080222	11	137
		138
26106-080302	14	3
26106-080352	5	7
26106-080402	2	27
	4	43
26106-080452	2	28
		29
26106-080552	5	3
	7	13
	10	13
26106-080602	4	44
		45
	10	33
26106-080702	2	30
26106-080752	2	31
26106-080802	10	17
26106-080852	5	4
26106-100202	11	139
26116-101302	16	10
26116-120252	15	27
26206-100352	3	4
26206-100702	3	5
26216-100302	2	19

Parts No. Index

Parts No.	Fig. No.	Ref. No.
26226-080222	4	42
26306-080002	4	46
	6	6
26306-100002	2	32
	16	11
26450-100452	11	126
26557-040102	15	26
26756-060002	12	68
26776-180002	11	127
27241-300000	1	14
27241-400000	4	8
27310-070001	4	20
729900-02801	1	30
729906-01561	1	1
729906-51320	11	1
729906-53100	13	1
729907-01559	2	1
977770-1207F	17	30

Parts No.	Fig. No.	Ref. No.

Parts No.	Fig. No.	Ref. No.

Parts No.	Fig. No.	Ref. No.