YANMAR

PARTS CATALOG

0CV10-M96401EN

Last update Feb., 2013

PREFACE

1. This parts catalog is the 1st edition of 4TNV94L-XHYB and 4TNV94L-XHYB2 for HYUNDAI HEAVY INDUSTRIES.

Pub.No. : 0CV10-G96401
Published : September , 2008

2. Model name

Engine model	Vehicle	Vehicle made by
4TNV94L-XHYB 4TNV94L-XHYB2	EXCAVATOR	HYUNDAI HEAVY INDUSTRIES

パーツカタログの見方

1．このパーツカタログに記載されている部品は、必ずしも標準装備部品ではありません。
2．部品変更は、予告なく行うことがあります。
3．パーツカタログリスト様式

0CF10-J21601　29. FO噴射ポンプ(ブーコン用)

(A)=4JH-DT　(B)=4JH-DTZ　(C)=4JH-DTZP　(D)=4JH-DTZA　(E)=4JH-DTZY　(F)=

① No.	② ﾚﾍﾞﾙ	部品番号	部品名	(A)	(B)	(C)	(D)	(E)	(F)	③ I	⑤ R
1	1	729595-51390	FOﾎﾟﾝﾌﾟ ASY(ﾌﾞｰｺﾝﾂｷ	1	1	1	1	1			1
1-1	1	729595-51391	FOﾎﾟﾝﾌﾟ ASY(ﾌﾞｰｺﾝﾂｷ	1	1	1	1	1		N	1
	(A=E00185)	(B=E00200)									
3	2	26022-060162	ﾅﾍﾞｺﾈｼﾞ(ﾊﾞﾈ6X16	9	9	9	9	9			
3-1 ④	2	26022-060162	ﾅﾍﾞｺﾈｼﾞ(ﾊﾞﾈ6X16	4	4	4	4	4		K	
	(A=E00156)	(B=E00156)	(C=E00156) (D=E00156)	(E=E00156)							
4	2	129470-51040	ｶﾑｼｬﾌﾄ	1	1	1	1	1			
5	2	122710-51050	ﾍﾞｱﾘﾝｸﾞ(HR30203J)	2	2	2	2	2			
6	2	129470-51060	ﾍﾞｱﾘﾝｸﾞｵｻｴ	1	1	1	1	1			

備考
1) ブーストコンペンセータ付、4JH-DT、4JH-DTZ とも
E00155までは特別注文仕様とします。

① 見出しNo.(REF.No.)

リスト頁の見出No.とイラスト図番の末尾が一致しない場合があります。

(例)イラスト図番　　リスト頁の見出No.

1　　1(変更前)　→ 1-1 (変更後)

互換性記号 N、R、K の場合は新部品のイラストを省略している場合があります。

② レベル(LEV.)

レベル

1･･･表示している数字はレベルを表し、親子の関係を示します。(1 は親部品です)
2･･･は、1 に含まれる子部品です。
3･･･は、2 に含まれる子部品(1 から見れば孫部品)です。
(注)非販売部品のイラストは一部展開しておりますが、リストには記載しておりません。

③ 互換性記号

部分変更が行われた場合、その部品に対して下記の互換性記号が表示されます。

記号	互換性	内　容
N	旧 ←○ ×→ 新	新部品は、旧部品に対して互換性有り、その逆は無し。
Q	旧 ←× ○→ 新	新部品は、旧部品に対して互換性無し、その逆は有り。
R	旧 ←○ ○→ 新	新・旧部品の双方に対して互換性有り。
S	旧 ←× ×→ 新	新・旧部品の双方に対して互換性無し。
W		新規追加となった部品。
Z		廃止された部品
F		単品では、互換性無し。但し関連部品セットにて互換性有り。
K		使用個数のみの変更

④ 実施記号

部品が変更された時には、適用される商品形式の実施号機が(A)～(F)欄毎に表示されます。

商品記号	商品No.	商品記号	商品No.
C	クラッチNo.コンプレッサーNo.	F	本機No.(農機商品)
D	ドライブNo.	M	本機No.
E	エンジンNo.		

注1)記号の後に西暦年月を記載している事もあります。 (例) ※1990.02
注2)実施号機が「XXXXX」・「ZZZZZ」は、部品変更の予告又は、実施号機が確定できなかった部品です。
注3)(A=E00185)は、A欄の商品形式(=4JHーDT)の部品変更実施号機は、E(=エンジンNo.)が
00185号機以降であることを示します。

⑤ 備考(リマークス)

R･･･欄に数字又は、英字(記号)を表示してあります。
イラスト下段に上記の記号と同一記号を表記して当該部品に対するコメント(備考)を表示しています。

Contents

0CV10-M96401

Fig. No.	Fig. Name
4TNV94L-XHYB,XHYB2	
1.	CYLINDER BLOCK
2.	GEAR HOUSING
3.	FLYWHEEL HOUSING & OIL SUMP
4.	CYLINDER HEAD & BONNET
5.	SUCTION MANIFOLD
6.	EXHAUST MANIFOLD
7.	CAMSHAFT & DRIVING GEAR
8.	CRANKSHAFT & PISTON
9.	LUB. OIL SYSTEM
10.	COOLING WATER SYSTEM
11.	FUEL INJECTION PUMP
12.	GOVERNOR
13.	FUEL INJECTION VALVE
14.	FUEL LINE
15.	STARTING MOTOR
16.	GENERATOR
17.	GENERATOR
18.	GASKET SET

Fig. No.	Fig. Name

Fig.1. CYLINDER BLOCK

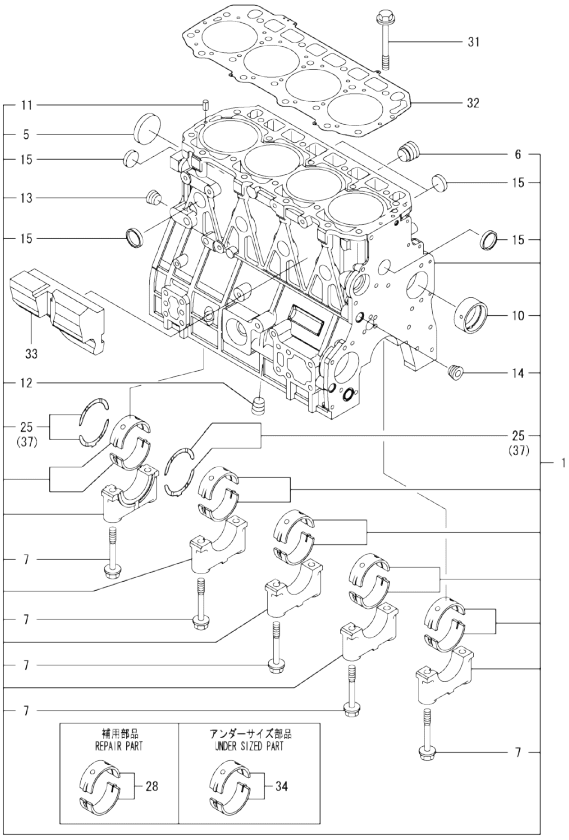

Remarks
(1) UNDER-SIZED(U.S=0.25)PART.
(2) OVER-SIZED(O.S=0.25)PART.
(3) REPAIR PART.

(A)=4TNV94L-XHYB (D)=
(B)=4TNV94L-XHYB2 (E)=
(C)= (F)=

No.	Lev.	Parts No.	Description	Q'ty (A)	(B)	(C)	(D)	(E)	(F)	I	R
1	1	729906-01560	BLOCK ASSY, CYLINDER	1	1						
5	2	129900-01250	PLUG, DISH TYPE 55	1	1						
6	2	171051-01921	PLUG, NPTF1	1	1						
7	2	129900-02020	BOLT, METAL CAP	10	10						
10	2	129900-02410	BUSH, CAMSHAFT	1	1						
11	2	22351-060012	PIN, SPRING 6.0X12	2	2						
12	2	23876-030000	PLUG, R03	1	1						
13	2	23876-030000	PLUG, R03	1	1						
14	2	23876-030000	PLUG, R03	1	1						
15	2	27241-300000	PLUG 30	8	8						
25	2	129900-02930	BEARING ASSY, THRUST	2							
25-1	2	129900-02931	BEARING ASSY, THRUST	2	2					N	
	(A=E25168)										
28	1	729900-02800	BEARING, MAIN	5							3
28-1	1	729900-02801	BEARING, MAIN	5	5					N	3
	(A=E25168)										
31	1	129900-01200	BOLT, CYLINDER HEAD	18	18						
32	1	129906-01340	GASKET, HEAD	1							
32-1	1	129907-01331	GASKET, HEAD	1	1					N	
	(A=*2008.06.)										
32-2	1	129906-01350	GASKET, HEAD	1	1					N	
	(A=*2009.12)	(B=*2009.12)									
33	1	129907-01190	SPACER	1	1						
34	1	129900-02340	BEARING ASSY, MAIN	5							1
34-1	1	129900-02341	BEARING ASSY, MAIN	5	5					N	1
	(A=E25168)										
37	1	129900-02940	BEARING, THRUST 0.25	2							2
37-1	1	129900-02941	BEARING, THRUST 0.25	2	2					N	2
	(A=E25168)										

N:Old ←Yes/No→ New. Q:Old ←No/Yes→ New. R:Old ←Yes/Yes→ New. S:Old ←No/No→ New. W:Add. Z:Discontinued. F:Interchangeable by set. K:Q'ty Change

Copyright (C) YANMAR GLOBAL CS CO., LTD. All RightsReserved.

Fig.2. GEAR HOUSING

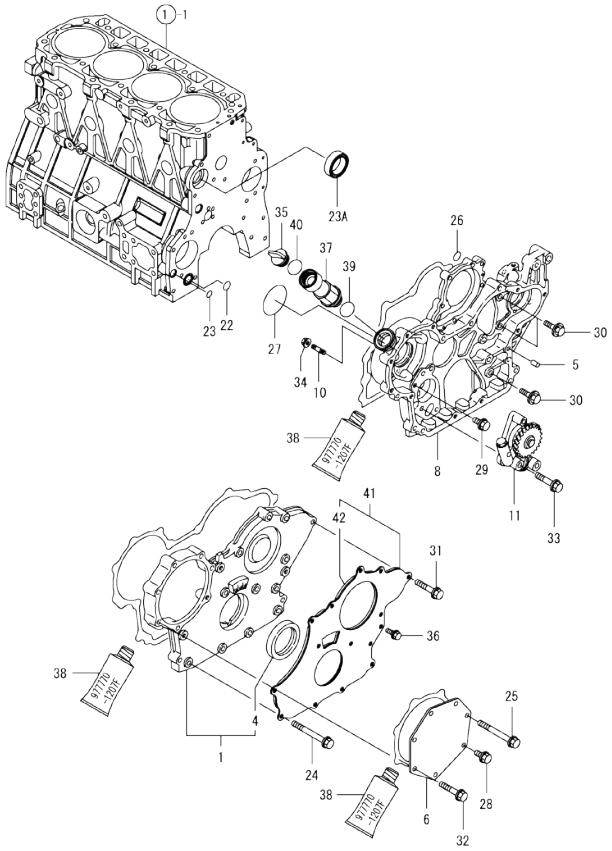

Remarks
(1) OPTIONAL PART.

(A)=4TNV94L-XHYB (D)=
(B)=4TNV94L-XHYB2 (E)=
(C)= (F)=

No.	Lev.	Parts No.	Description	Q'ty (A)	(B)	(C)	(D)	(E)	(F)	I	R
1	1	729907-01559	COVER ASSY,GEAR CASE	1	1						
4	2	129916-01800	SEAL, OIL	1	1						
5	1	129100-01580	PIN, PARALLEL 8X16	4	4						
6	1	129951-01740	COVER	1	1						
8	1	129944-01500	CASE, GEAR	1	1						
10	1	26216-100302	STUD, M10X 30	4	4						
11	1	129900-32001	PUMP ASSY, OIL	1	1						
22	1	129900-32030	O-RING, P20	1	1						
23	1	129900-32040	O-RING, P14	1	1						
23A	1	129927-42140	GASKET, PUMP OUTLET	1	1					W	
	(A=*2014.09)	(B=EG0703)									
24	1	129001-91810	BOLT, M8X70	6	6						
25	1	129001-91810	BOLT, M8X70	1	1						
26	1	24311-000070	O-RING, 1AP7.0	1	1						
27	1	24351-030750	O-RING, 1A3075	1	1						
28	1	26106-080162	BOLT, M8X 16 PLATED	1	1						
29	1	26106-080162	BOLT, M8X 16 PLATED	1	1						
30	1	26106-080202	BOLT, M8X 20 PLATED	3	3						
31	1	26106-080402	BOLT, M8X 40 PLATED	5	5						
32	1	26106-080402	BOLT, M8X 40 PLATED	5	5						
33	1	26106-080452	BOLT, M8X 45 PLATED	3	3						
34	1	26306-100002	NUT, M10	4	4						
35	1	124160-01751	CAP, FILLER	1	1						
36	1	26106-080162	BOLT, M8X 16 PLATED	3	3						
37	1	171031-11741	PIPE	1	1						
38	1	977770-1207F	GASKET.LIQUID	1	1						1
39	1	24311-000320	O-RING, 1AP32.0	1	1						
40	1	24311-000320	O-RING, 1AP32.0	1	1						
41	1	129900-01850	COVER ASSY,GEAR CASE	1	1						
42	2	129900-01870	SPONGE, GEAR CASE	1	1						

N:Old ←Yes/No→ New. Q:Old ←No/Yes→ New. R:Old ←Yes/Yes→ New. S:Old ←No/No→ New. W:Add. Z:Discontinued. F:Interchangeable by set. K:Q'ty Change

Copyright (C) YANMAR GLOBAL CS CO., LTD. All RightsReserved.

Fig.3. FLYWHEEL HOUSING & OIL SUMP

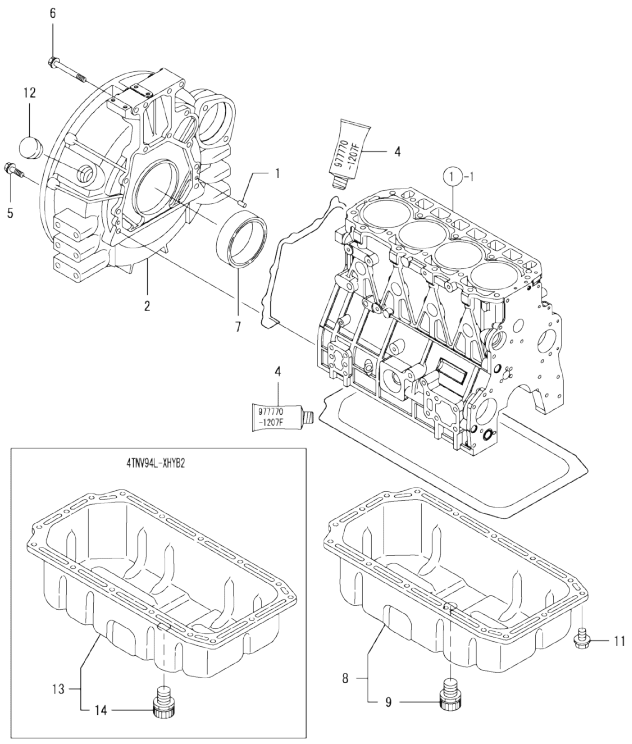

(A)=4TNV94L-XHYB
(B)=4TNV94L-XHYB2
(C)=
(D)=
(E)=
(F)=

No.	Lev.	Parts No.	Description	Q'ty (A)	(B)	(C)	(D)	(E)	(F)	I	R
1	1	129100-01580	PIN, PARALLEL 8X16	2	2						
2	1	129981-01600	HOUSING, FLYWHEEL	1	1						
4	1	977770-1207F	GASKET.LIQUID	1	1						1
5	1	26206-100352	BOLT, M10X 35 PLATED	9	9						
6	1	26206-100702	BOLT, M10X 70 PLATED	4	4						
7	1	129916-01790	SEAL, D115/95XT11	1	1						
8	1	129906-01720	OIL PAN ASSY	1							
9	2	129906-01640	COCK, DRAIN	1							
11	1	26106-080122	BOLT, M8X 12 PLATED	16	16						
12	1	119620-01750	CAP	1	1					W	
	(A=FROM 1ST)										
13	1	129940-01720	OIL PAN ASSY		1						
14	2	129906-01640	COCK, DRAIN		1						

Remarks
(1) OPTIONAL PART.

N:Old ◄Yes/No► New. Q:Old ◄No/Yes► New. R:Old ◄Yes/Yes► New. S:Old ◄No/No► New. W:Add. Z:Discontinued. F:Interchangeable by set. K:Q'ty Change

Copyright (C) YANMAR GLOBAL CS CO., LTD. All RightsReserved.

Fig.4. CYLINDER HEAD & BONNET

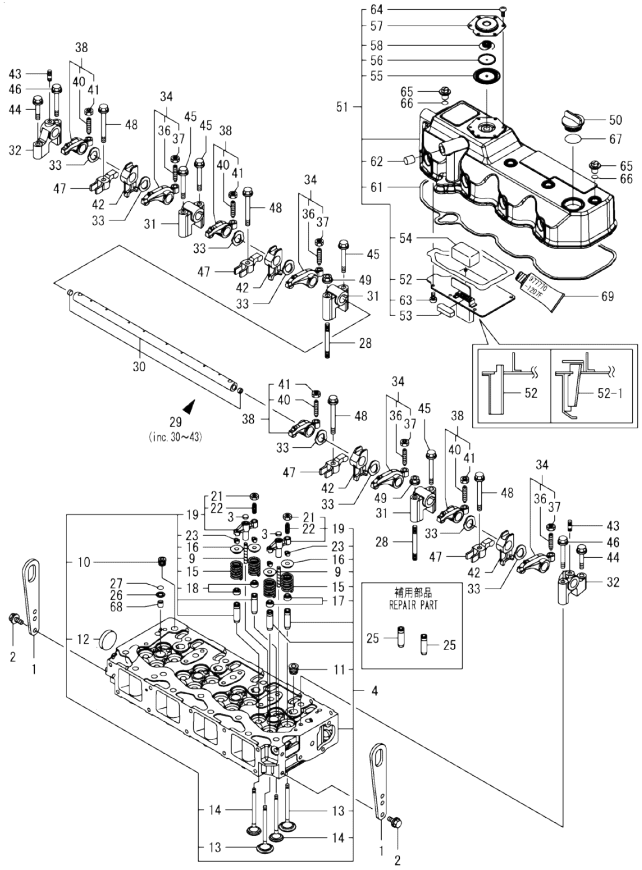

(A)=4TNV94L-XHYB
(B)=4TNV94L-XHYB2
(C)=
(D)=
(E)=
(F)=

No.	Lev.	Parts No.	Description	Q'ty (A)	(B)	(C)	(D)	(E)	(F)	I	R
1	1	129900-07900	LIFTER, ENGINE	2	2						
2	1	26106-080162	BOLT, M8X 16 PLATED	4	4						
3	1	123907-11550	SEAT, VALVE BRIDGE	8	8						
4	1	129907-11700	HEAD ASSY, CYLINDER	1	1						
9	2	123907-11820	GUIDE, BRIDGE	8	8						
10	2	23876-020000	PLUG, R02	1	1						
11	2	23876-030000	PLUG, R03	4	4						
12	2	27241-400000	PLUG, 40	1	1						
13	2	129907-11100	VALVE, SUCTION	8	8						
14	2	129907-11110	VALVE, EXHAUST	8	8						
15	2	129907-11120	SPRING, VALVE	16	16						
16	2	119620-11180	RETAINER, SPRING	16	16						
17	2	124160-11340	SEAL, VALVE STEM	8	8						
18	2	124950-11340	SEAL, VALVE STEM	8							
18-1	2	119803-11340	SEAL, VALVE STEM	8	8					N	
	(A=E27944)										
19	2	129907-11510	BRIDGE ASSY, VALVE	8	8						
21	3	129150-11750	NUT, M8	8	8						
22	3	123907-11830	ADJUSTER	8	8						
23	2	27310-070001	COTTER, 7	16	16						
25	1	129907-11800	GUIDE, VALVE	16	16						1
26	1	119625-11880	SEAT, NOZZLE	4	4						
27	1	24311-000120	O-RING, 1AP12.0	4	4						
28	1	119593-11301	BOLT, STUD M8X80	2	2						
29	1	129907-11341	SHAFT ASSY, ROCKER	1	1						
30	2	129907-11250	SHAFT, ROCKER ARM	1	1						
31	2	129907-11260	SUPPORT, ROCKER ARM	3	3						
32	2	129907-11270	SUPPORT, ROCKER ARM	2	2						
33	2	123907-11280	WASHER	8	8						
34	2	129907-11650	ARM ASSY, ROCKER	4	4						
36	3	129150-11230	SCREW, VALVE ADJUST	4	4						
37	3	129150-11750	NUT, M8	4	4						
38	2	129907-11660	ARM ASSY, ROCKER	4	4						
40	3	129150-11230	SCREW, VALVE ADJUST	4	4						
41	3	129150-11750	NUT, M8	4	4						
42	2	129907-11920	RETAINER, NOZZLE	4	4						
43	2	26226-080222	STUD, M8X 22	2	2						
44	1	26106-080402	BOLT, M8X 40 PLATED	2	2						
45	1	26106-080602	BOLT, M8X 60 PLATED	4	4						
46	1	26106-080602	BOLT, M8X 60 PLATED	2	2						
47	1	129907-11910	RETAINER, NOZZLE	4	4						
48	1	129907-11950	BOLT, M8X75	4	4						
49	1	26306-080002	NUT, M8	2	2						
50	1	124160-01751	CAP, FILLER	1	1						
51	1	129907-11320	BONNET ASSY, HEAD	1							
51-1	1	129907-11321	BONNET ASSY, HEAD	1	1					N	
	(A=E39505)										
52	2	129907-03010	PLATE, BAFFLE	1							
52-1	2	129907-03011	PLATE, BAFFLE	1	1					S	
	(A=E07192)										
53	2	129907-03060	BAFFLE, BREATHER	1							

N:Old ←Yes/No→ New. Q:Old ←No/Yes→ New. R:Old ←Yes/Yes→ New. S:Old ←No/No→ New. W:Add. Z:Discontinued. F:Interchangeable by set. K:Q'ty Change

Remarks
(1) REPAIR PART.
(2) OPTIONAL PART.

++ CONTINUE ++

Copyright (C) YANMAR GLOBAL CS CO., LTD. All RightsReserved.

Fig.4. CYLINDER HEAD & BONNET

(A)=4TNV94L-XHYB
(B)=4TNV94L-XHYB2
(C)=
(D)=
(E)=
(F)=

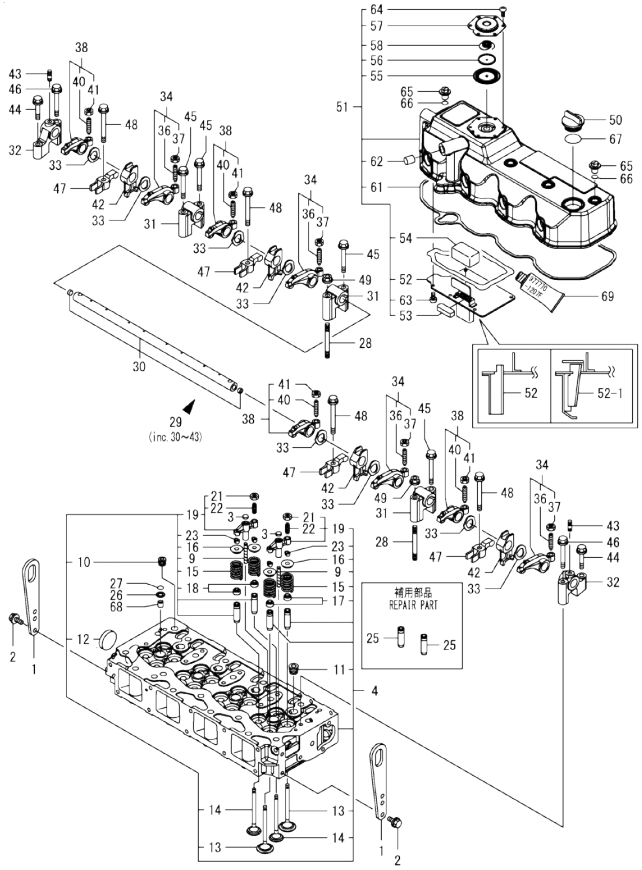

No.	Lev.	Parts No.	Description	Q'ty (A)	(B)	(C)	(D)	(E)	(F)	I	R
53-1	2	129907-03061	BAFFLE, BREATHER	1	1					S	
	(A=E07192)										
54	2	129907-03070	BAFFLE, BREATHER	1	1						
55	2	123907-03100	DIAPHRAGM	1	1						
56	2	123907-03110	PLATE	1	1						
57	2	123907-03120	PLATE, BREATHER	1	1						
58	2	123907-03140	SPRING, DIAPHRAGM	1	1						
61	2	129907-11310	GASKET, BONNET	1							
61-1	2	129933-11310	GASKET, BONNET	1	1					N	
	(A=E39505)										
62	2	119640-61400	PLUG	1	1						
63	2	22857-500100	SCREW, 5X10	6	6						
64	2	22857-500100	SCREW, 5X10	6	6						
65	1	124160-11360	KNOB	4	4						
66	1	24311-000120	O-RING, 1AP12.0	4	4						
67	1	24311-000320	O-RING, 1AP32.0	1	1						
68	1	119802-11870	PROTECTOR, NOZZLE	4	4						
69	1	977770-1207F	GASKET.LIQUID	1	1						2

Remarks
(1) REPAIR PART.
(2) OPTIONAL PART.

N:Old ←Yes/No→ New. Q:Old ←No/Yes→ New. R:Old ←Yes/Yes→ New. S:Old ←No/No→ New. W:Add. Z:Discontinued. F:Interchangeable by set. K:Q'ty Change

Copyright (C) YANMAR GLOBAL CS CO., LTD. All RightsReserved.

Fig.5. SUCTION MANIFOLD

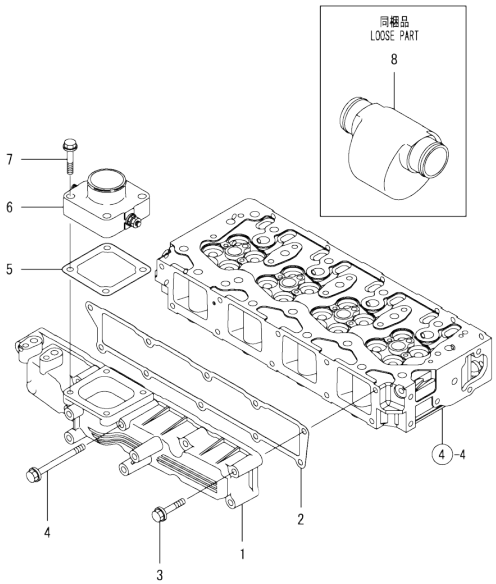

(A)=4TNV94L-XHYB
(B)=4TNV94L-XHYB2
(C)=
(D)=
(E)=
(F)=

No.	Lev.	Parts No.	Description	Q'ty (A)	(B)	(C)	(D)	(E)	(F)	I	R
1	1	129907-12100	MANIFOLD, AIR INTAKE	1	1						
2	1	129907-12110	GASKET, MANIFOLD	1	1						
3	1	26106-080552	BOLT, M8X 55 PLATED	9	9						
4	1	26106-080852	BOLT, M8X 85 PLATED	1	1						
5	1	121850-77021	GASKET, AIR HEATER	1	1						
6	1	129915-77050	HEATER, AIR 12V	1							
6-1	1	129915-77051	HEATER, AIR 12V	1	1					N	
	(A=*2008.05.)										
7	1	26106-080352	BOLT, M8X 35 PLATED	4	4						
8	1	119005-12060	SILENCER, INTAKE	1	1						

N:Old ←Yes/No→ New. Q:Old ←No/Yes→ New. R:Old ←Yes/Yes→ New. S:Old ←No/No→ New. W:Add. Z:Discontinued. F:Interchangeable by set. K:Q'ty Change

Copyright (C) YANMAR GLOBAL CS CO., LTD. All RightsReserved.

Fig.6. EXHAUST MANIFOLD

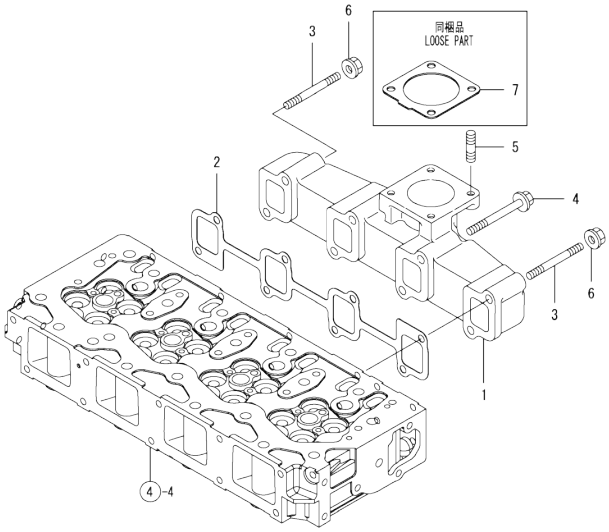

(A)=4TNV94L-XHYB
(B)=4TNV94L-XHYB2
(C)=
(D)=
(E)=
(F)=

No.	Lev.	Parts No.	Description	Q'ty (A)	(B)	(C)	(D)	(E)	(F)	I	R
1	1	129900-13200	MANIFOLD, EXHAUST	1	1						
2	1	129900-13251	GASKET, EXH.MANIFOLD	1	1						
3	1	123900-13610	BOLT, STUD M8X80	2	2						
4	1	123900-13630	BOLT, M8X80	6	6						
5	1	119131-18320	BOLT, STUD M8X22	4	4						
6	1	26306-080002	NUT, M8	2	2						
7	1	129930-13200	GASKET, SILENCER	1							
7-1	1	129930-13201	GASKET, SILENCER	1	1					N	
	(A=E07992)										

N:Old ←Yes/No→ New. Q:Old ←No/Yes→ New, R:Old ←Yes/Yes→ New. S:Old ←No/No→ New. W:Add. Z:Discontinued. F:Interchangeable by set. K:Q'ty Change

Copyright (C) YANMAR GLOBAL CS CO., LTD. All RightsReserved.

Fig.7. CAMSHAFT & DRIVING GEAR

(A)=4TNV94L-XHYB
(B)=4TNV94L-XHYB2
(C)=
(D)=
(E)=
(F)=

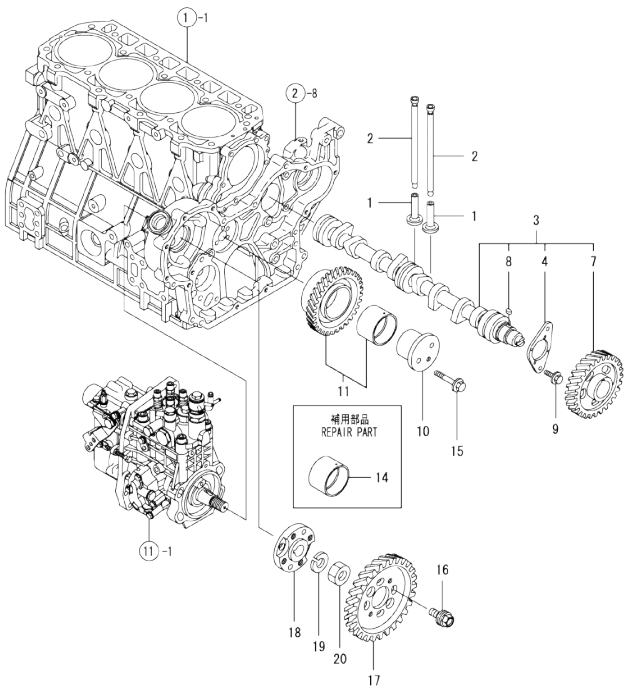

No.	Lev.	Parts No.	Description	Q'ty (A)	(B)	(C)	(D)	(E)	(F)	I	R
1	1	129150-14200	TAPPET	8	8						
2	1	129907-14400	PUSH-ROD	8	8						
3	1	129907-14581	CAMSHAFT ASSY	1	1						
3-1	1	129908-14581	CAMSHAFT ASSY	1	1					N	
	(A=EZZZZZ)	(B=EZZZZZ)									
4	2	129150-02450	BEARING, THRUST	1	1						
7	2	129900-14100	GEAR, CAMSHAFT	1	1						
8	2	22512-070140	KEY, 7X 14	1	1						
9	1	26106-080162	BOLT, M8X 16 PLATED	2	2						
10	1	123900-25060	SHAFT, IDLE GEAR	1	1						
11	1	129900-25100	GEAR ASSY, IDLE	1	1						
14	1	129150-25920	BUSH, IDLE GEAR	1	1						1
15	1	26106-080552	BOLT, M8X 55 PLATED	3	3						
16	1	129953-25300	BOLT	4	4						
17	1	123907-25909	GEAR, PUMP	1							
17-1	1	129907-25900	GEAR, PUMP	1	1					R	
	(A=E07992)										
18	1	158563-51150	FLANGE	1	1						
19	1	22217-180000	WASHER, SPRING 18	1	1						
20	1	26776-180002	NUT, LOCK M18	1	1						

Remarks
(1) REPAIR PART.

N:Old $\xleftarrow[\text{No}]{\text{Yes}}$ New. Q:Old $\xleftarrow[\text{Yes}]{\text{No}}$ New. R:Old $\xleftarrow[\text{Yes}]{\text{Yes}}$ New. S:Old $\xleftarrow[\text{No}]{\text{No}}$ New. W:Add. Z:Discontinued. F:Interchangeable by set. K:Q'ty Change

Copyright (C) YANMAR GLOBAL CS CO., LTD. All RightsReserved.

Fig.8. CRANKSHAFT & PISTON

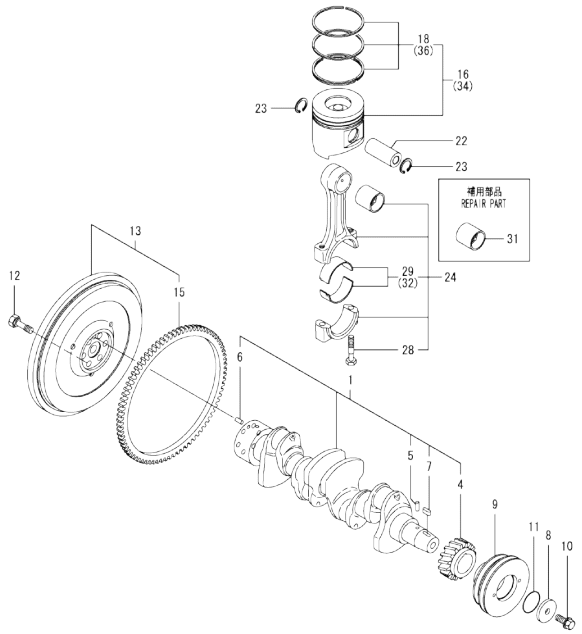

(A)=4TNV94L-XHYB
(B)=4TNV94L-XHYB2
(C)=
(D)=
(E)=
(F)=

No.	Lev.	Parts No.	Description	Q'ty (A)	(B)	(C)	(D)	(E)	(F)	I	R
1	1	129902-21000	CRANKSHAFT ASSY	1	1						
4	2	129900-21200	GEAR, CRANKSHAFT	1	1						
5	2	121850-21290	PIN	1	1						
6	2	121850-21920	PIN, PARALLEL 10X22	1	1						
7	2	22512-070140	KEY, 7X 14	1	1						
8	1	129960-21640	WASHER	1	1						
9	1	129916-21680	V-PULLEY, CRANKSHAFT	1							
9-1	1	129916-21620	V-PULLEY, CRANKSHAFT	1	1					N	
	(A=E23834)										
10	1	129916-21610	BOLT	1	1						
11	1	24341-000530	O-RING, 1AS53.0	1	1						
12	1	121850-21130	BOLT, FLYWHEEL	6	6						
13	1	129953-21581	FLYWHEEL ASSY	1	1						
15	2	129900-21600	GEAR, RING	1	1						
16	1	129906-22080	PISTON ASSY	4	4						
16-1	1	129906-22090	PISTON ASSY	4	4					F	4
	(A=*2009.12)	(B=*2009.12)									
18	2	129906-22050	RING SET, PISTON	4	4						
22	1	120130-22301	PIN, PISTON	4	4						
23	1	22252-000300	RING, 30	8	8						
24	1	129900-23000	ROD ASSY, CONNECTING	4							
24-1	1	129900-23001	ROD ASSY, CONNECTING	4	4					N	
	(A=E04022)										
28	2	129900-23200	BOLT, CONNECTING ROD	8	8						
29	2	129900-23600	BEARING, CRANK PIN	4							
29-1	2	129900-23601	BEARING, CRANK PIN	4	4					N	
	(A=E25168)										
31	1	129900-23910	BEARING, PISTON PIN	4							1
31-1	1	129900-23911	BEARING, PISTON PIN	4	4					N	1
	(A=E04022)										
32	1	129900-23610	BEARING ASSY, 0.25US	4							2
32-1	1	129900-23611	BEARING ASSY, 0.25US	4	4					N	2
	(A=E25168)										
34	1	729906-22900	PISTON ASSY, 0.25 OS	4	4						3
34-1	1	129906-22900	PISTON ASSY, 0.25 OS	4	4					R	3
	(A=EXXXXX)	(B=EXXXXX)									
34-2	1	129906-22910	PISTON ASSY, 0.25 OS	4	4					F	3
	(A=*2009.12)	(B=*2009.12)									
36	2	729906-22950	RING SET, 0.25 OS	4	4						3
36-1	2	129916-22950	RING SET, 0.25 OS	4	4					R	3
	(A=EXXXXX)	(B=EXXXXX)									

Remarks
(1) Repair part.
(2) Under-sized (U.S.=0.25) part.
(3) Over-sized (O.S.=0.25) part.
(4) Ref. No.16 is interchangeable with a set of Ref. No.16-1 and Fig.1 Ref. No.32-2.

N:Old $\overset{\text{Yes}}{\underset{\text{No}}{\leftrightarrow}}$ New. Q:Old $\overset{\text{No}}{\underset{\text{Yes}}{\leftrightarrow}}$ New. R:Old $\overset{\text{Yes}}{\underset{\text{Yes}}{\leftrightarrow}}$ New. S:Old $\overset{\text{No}}{\underset{\text{No}}{\leftrightarrow}}$ New. W:Add. Z:Discontinued. F:Interchangeable by set. K:Q'ty Change

Copyright (C) YANMAR GLOBAL CS CO., LTD. All RightsReserved.

Fig.9. LUB. OIL SYSTEM

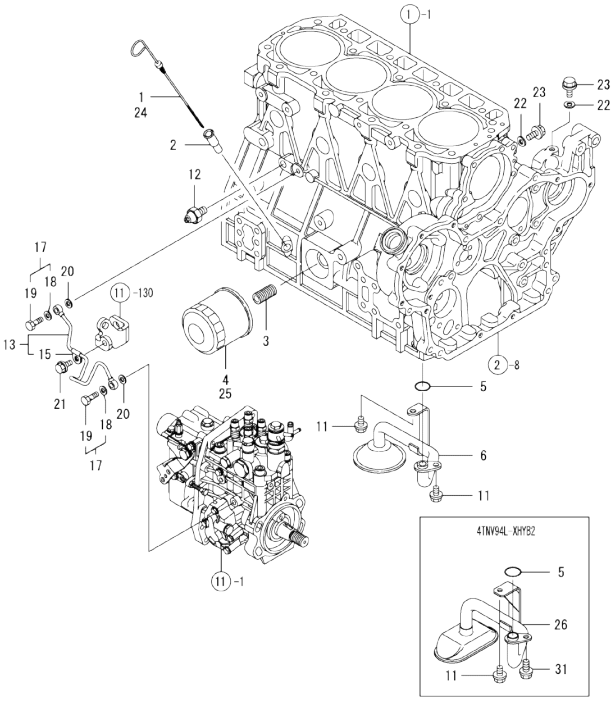

(A)=4TNV94L-XHYB
(B)=4TNV94L-XHYB2
(C)=
(D)=
(E)=
(F)=

No.	Lev.	Parts No.	Description	Q'ty (A)	(B)	(C)	(D)	(E)	(F)	I	R
1	1	129900-34800	DIPSTICK	1							
2	1	121520-34810	GUIDE, DIPSTICK	1	1						
3	1	119000-35140	BOLT, STUD FILTER	1	1						
4	1	129150-35153	FILTER ASSY, D80X80L	1							1
5	1	129900-32030	O-RING, P20	1	1						
6	1	129900-35000	PIPE ASSY, OIL INLET	1							
11	1	26106-080122	BOLT, M8X 12 PLATED	2	1						
12	1	121252-39450	SWITCH, HYDRAULIC	1	1						
13	1	129907-39061	PIPE ASSY, OIL	1	1						
15	2	123907-39500	RETAINER, PIPE	1	1						
17	1	129005-59830	BOLT ASSY, JOINT M8	2	2						
18	2	22190-080002	WASHER, SEAL 6	2	2						
19	2	23857-030000	BOLT, JOINT 3	2	2						
20	1	22190-080002	WASHER, SEAL 6	2	2						
21	1	26106-080122	BOLT, M8X 12 PLATED	1	1						
22	1	22190-080002	WASHER, SEAL 6	2	2						
23	1	26106-080122	BOLT, M8X 12 PLATED	2	2						
24	1	129906-34851	DIPSTICK		1						
25	1	119005-35151	FILTER, D80X100		1						1
26	1	129953-35000	PIPE ASSY, OIL INLET		1						
31	1	26106-080162	BOLT, M8X 16 PLATED		1						

Remarks
(1) REPAIR PART.

N:Old $\frac{\text{Yes}}{\text{No}}$ New. Q:Old $\frac{\text{No}}{\text{Yes}}$ New. R:Old $\frac{\text{Yes}}{\text{Yes}}$ New. S:Old $\frac{\text{No}}{\text{No}}$ New. W:Add. Z:Discontinued. F:Interchangeable by set. K:Q'ty Change

Copyright (C) YANMAR GLOBAL CS CO., LTD. All RightsReserved.

Fig.10. COOLING WATER SYSTEM

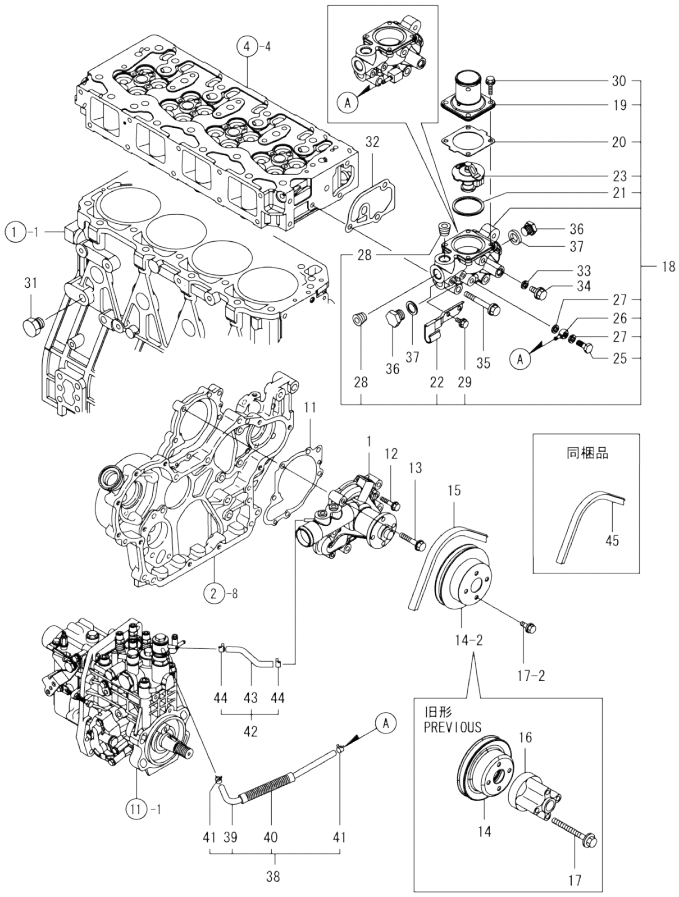

(A)=4TNV94L-XHYB (D)=
(B)=4TNV94L-XHYB2 (E)=
(C)= (F)=

No.	Lev.	Parts No.	Description	Q'ty (A)	(B)	(C)	(D)	(E)	(F)	I	R
1	1	129907-42000	PUMP ASSY, WATER	1	1						
11	1	129900-42020	GASKET, WATER PUMP	1	1						
12	1	26106-060302	BOLT, M6X 30 PLATED	2	2						
13	1	26106-080552	BOLT, M8X 55 PLATED	5	5						
14	1	129930-42450	V-PULLEY, C.W.PUMP	1							
14-1	1	129916-42410	V-PULLEY, C.W.PUMP	1	1						N
	(A=E23834)										
14-2	1	129928-42410	V-PULLEY, C.W.PUMP	1	1						N
	(A=*2009.01)	(B=*2009.01)									
15	1	25132-004100	V-BELT, A41	1							
15-1	1	25153-004400	V-BELT, B44	1	1						N
	(A=E23834)										
15-2	1	25153-004400	V-BELT, B44		1						Z
		(B=EZZZZZ)									
16	1	119117-44760	SPACER, FAN	1	1						Z
	(A=*2009.01)	(B=*2009.01)									
17	1	129916-44770	BOLT, M8X78	4							
17-1	1	26106-080802	BOLT, M8X 80 PLATED	4	4						R
	(A=E05110)										
17-2	1	26014-080162	BOLT, M8X 16	4	4						S
	(A=*2009.01)	(B=*2009.01)									
18	1	129946-49810	CASE ASSY,THERMOSTAT	1	1						
19	2	129916-49530	COVER, THERMOSTAT	1	1						
20	2	121850-49540	GASKET, THERMOSTAT	1	1						
21	2	121850-49550	GASKET, THERMOSTAT	1	1						
22	2	129907-49730	RETAINER, PIPE	1	1						
23	2	121850-49800	THERMOSTAT, 82C	1	1						
25	2	105582-59150	BOLT, PIPE JOINT M8	1							Z
	(A=E05110)										
26	2	23387-040800	JOINT, HOSE 4-8	1							Z
	(A=E05110)										
27	2	23414-080000	GASKET, 8X1.0	2							Z
	(A=E05110)										
28	2	23875-030000	PLUG, R03	2	2						
29	2	26106-060122	BOLT, M6X 12 PLATED	2							
29-1	2	26106-060122	BOLT, M6X 12 PLATED	1	1						K
	(A=E05110)										
30	2	26106-060202	BOLT, M6X 20 PLATED	4	4						
31	1	171056-49120	PLUG, DRAIN R1/4	1	1						
32	1	129900-49870	GASKET, THERMOSTAT	1	1						
33	1	23414-080000	GASKET, 8X1.0	1	1						
34	1	26106-080122	BOLT, M8X 12 PLATED	1	1						
35	1	26106-080602	BOLT, M8X 60 PLATED	3	3						
36	1	121450-42450	PLUG, M16	2	2						
37	1	124465-44950	GASKET, 16	2	2						
38	1	129907-49610	HOSE ASSY, WATER	1	1						
39	2	129907-49710	HOSE, WATER	1	1						
40	2	129907-49750	TUBE, CORRUGATED	1	1						
41	2	124722-59050	CLAMP, HOSE 9	2	2						
42	1	129907-49620	HOSE ASSY, WATER	1	1						
43	2	129907-49720	HOSE, WATER	1	1						

N:Old ←Yes/No→ New. Q:Old ←No/Yes→ New. R:Old ←Yes/Yes→ New. S:Old ←No/No→ New. W:Add. Z:Discontinued. F:Interchangeable by set. K:Q'ty Change

++ CONTINUE ++

Copyright (C) YANMAR GLOBAL CS CO., LTD. All RightsReserved.

Fig.10. COOLING WATER SYSTEM

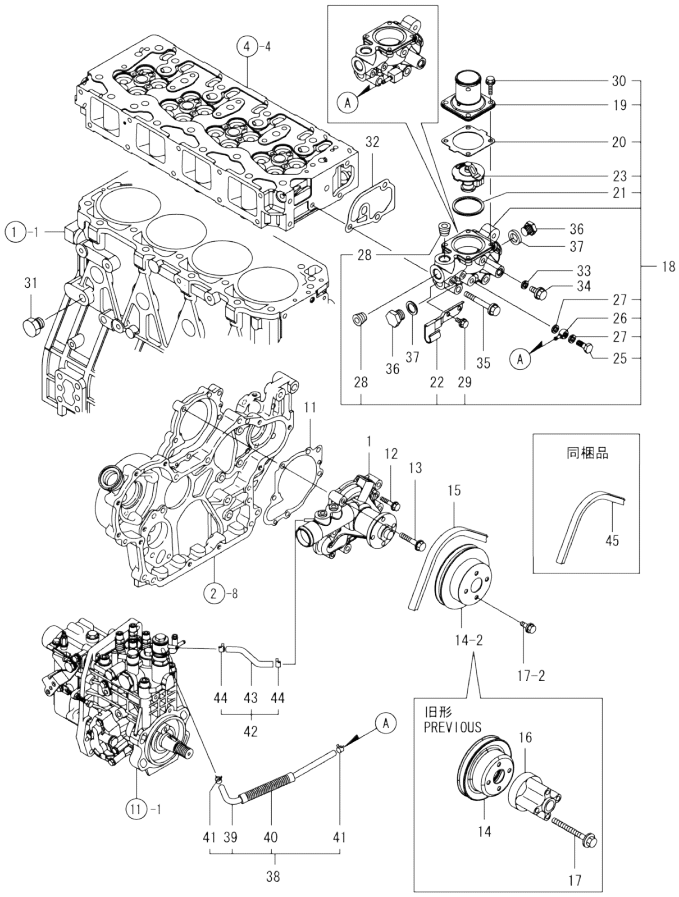

(A)=4TNV94L-XHYB
(B)=4TNV94L-XHYB2
(C)=
(D)=
(E)=
(F)=

No.	Lev.	Parts No.	Description	Q'ty (A)	(B)	(C)	(D)	(E)	(F)	I	R
44	2	124722-59050	CLAMP, HOSE 9	2	2						
45	1	25153-004400	V-BELT, B44		1					W	
		(B=EZZZZZ)									

N:Old ←Yes/No→ New. Q:Old ←No/Yes→ New. R:Old ←Yes/Yes→ New. S:Old ←No/No→ New. W:Add. Z:Discontinued. F:Interchangeable by set. K:Q'ty Change

Copyright (C) YANMAR GLOBAL CS CO., LTD. All RightsReserved.

Fig.11. FUEL INJECTION PUMP

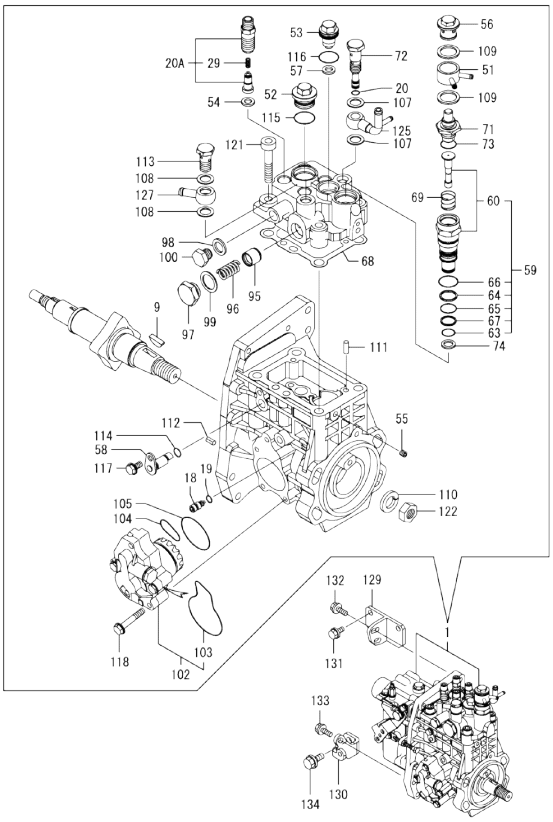

Remarks
(1) GOVERNOR ASSY(FIG.12) IS INCORPORATED IN THIS FUEL INJECTION PUMP.(REF.NO.1).

(A)=4TNV94L-XHYB (D)=
(B)=4TNV94L-XHYB2 (E)=
(C)= (F)=

No.	Lev.	Parts No.	Description	Q'ty (A)	(B)	(C)	(D)	(E)	(F)	I	R
1	1	729906-51330	FIE ASSY	1							1
1-1	1	729906-51331	FIE ASSY	1						N	1
	(A=E23042)										
1-2	1	729906-51332	FIE ASSY	1	1					N	1
	(A=E36683)										
9	2	144626-51090	FEATHER KEY, 5X19	1	1						
18	2	158600-51270	STOPPER, TAPPET	1	1						
19	2	158563-51281	O-RING, 4D S6	1	1						
20	2	158563-51281	O-RING, 4D S6	1	1						
20A	2	129509-51390	VALVE ASSY, DELIVERY	4	4					W	
	(A=E61609)										
29	3	158563-51330	SPRING, DELIVERY	4	4						
51	2	158553-51551	JOINT, COOLING WATER	1	1						
52	2	158601-51550	PLUG, M22	1	1						
53	2	129907-51560	PLUG, M16	1	1						
54	2	158552-51570	GASKET, PLUG	4							
54-1	2	158552-51571	GASKET, PLUG	4	4					R	
	(A=*2008.07.)										
55	2	158557-51570	PLUG, RACK	1	1						
56	2	158601-51570	PLUG	1	1						
57	2	129906-51580	GASKET, PLUG	1	1						
58	2	158552-51580	LIFTER, LINK	1	1						
59	2	119802-51590	TIMER ASSY	1	1						
60	3	119802-51600	TIMER ASSY	1	1						
63	3	158553-51670	O-RING	1	1						
64	3	119802-51680	RING, BACKUP	1	1						
65	3	119802-51690	O-RING	1	1						
66	3	24356-010200	O-RING, 4D1020	1	1						
67	3	24372-000150	RING, BACK UP T2P15	1	1						
68	2	158560-51600	GASKET	1	1						
69	2	158553-51630	SPRING, TIMER	1	1						
71	2	158553-51640	THERMOELEMENT	1	1						
72	2	158601-51650	JOINT, OVER FLOW	1	1						
73	2	158553-51660	O-RING, P14	1	1						
74	2	158553-51680	GASKET, TIMER	1	1						
95	3	158601-51770	PISTON, ACCUMLATOR	1	1						
96	3	158552-51781	SPRING, ACCUMULATOR	1	1						
97	3	158601-51790	PLUG	1	1						
98	3	22190-120002	WASHER, SEAL 12	1	1						
99	3	22190-180002	WASHER, SEAL 18	1	1						
100	3	23887-120002	PLUG, 12	1	1						
102	2	158552-52100	PUMP ASSY, FUEL FEED	1	1						
103	3	158552-52500	O-RING	1	1						
104	2	158552-52310	O-RING	1	1						
105	2	158552-52400	O-RING, 4E S42	1	1						
107	2	22190-120002	WASHER, SEAL 12	2	2						
108	2	22190-120002	WASHER, SEAL 12	2	2						
109	2	22190-180002	WASHER, SEAL 18	2	2						
110	2	22217-180000	WASHER, SPRING 18	1	1						
111	2	22312-050140	PIN, PARALLEL M5X14	2	2						
112	2	22351-050010	PIN, SPRING 5.0X10	2	2						

N:Old ←Yes/No→ New. Q:Old ←No/Yes→ New. R:Old ←Yes/Yes→ New. S:Old ←No/No→ New. W:Add. Z:Discontinued. F:Interchangeable by set. K:Q'ty Change

++ CONTINUE ++

Copyright (C) YANMAR GLOBAL CS CO., LTD. All RightsReserved.

Fig.11. FUEL INJECTION PUMP

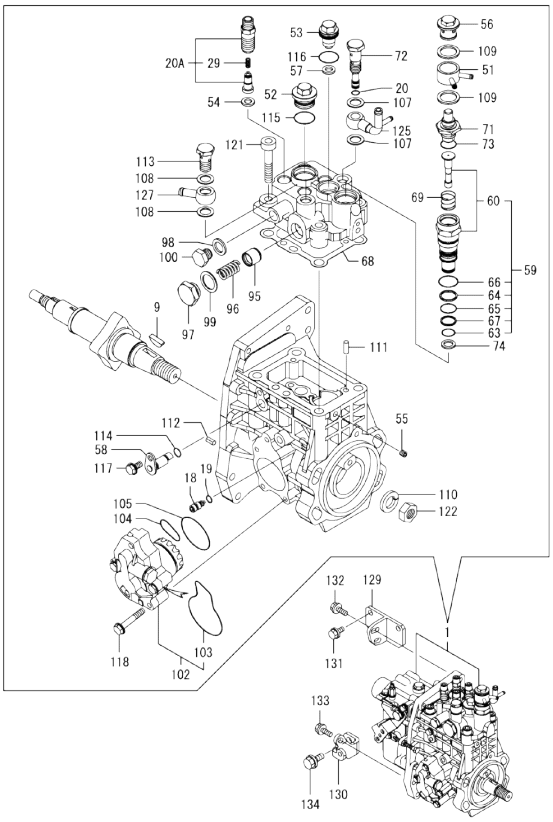

Remarks
(1) GOVERNOR ASSY(FIG.12) IS INCORPORATED IN THIS FUEL INJECTION PUMP.(REF.NO.1).

(A)=4TNV94L-XHYB
(B)=4TNV94L-XHYB2
(C)=
(D)=
(E)=
(F)=

No.	Lev.	Parts No.	Description	Q'ty (A)	(B)	(C)	(D)	(E)	(F)	I	R
113	2	23857-060000	BOLT, JOINT 6	1	1						
114	2	24311-000070	O-RING, 1AP7.0	1	1						
115	2	24356-010200	O-RING, 4D1020	1	1						
116	2	24356-020210	O-RING, 4D2021	1	1						
117	2	26106-060102	BOLT, M6X 10 PLATED	1	1						
118	2	26106-060352	BOLT, M6X 35 PLATED	4	4						
121	2	26450-100452	BOLT, M10X 45	4	4						
122	2	26776-180002	NUT, LOCK M18	1	1						
125	2	158552-51670	JOINT, OVER FLOW	1	1						
127	2	129916-59020	JOINT, PIPE 12	1	1						
129	1	129907-01950	RETAINER, PUMP	1	1						
130	1	129906-01960	RETAINER, PUMP	1	1						
131	1	26106-080162	BOLT, M8X 16 PLATED	2	2						
132	1	26106-080222	BOLT, M8X 22 PLATED	2	2						
133	1	26106-080222	BOLT, M8X 22 PLATED	1	1						
134	1	26106-100202	BOLT, M10X 20 PLATED	1	1						

N:Old ←Yes/No→ New. Q:Old ←No/Yes→ New. R:Old ←Yes/Yes→ New. S:Old ←No/No→ New. W:Add. Z:Discontinued. F:Interchangeable by set. K:Q'ty Change

Copyright (C) YANMAR GLOBAL CS CO., LTD. All RightsReserved.

Fig.12. GOVERNOR

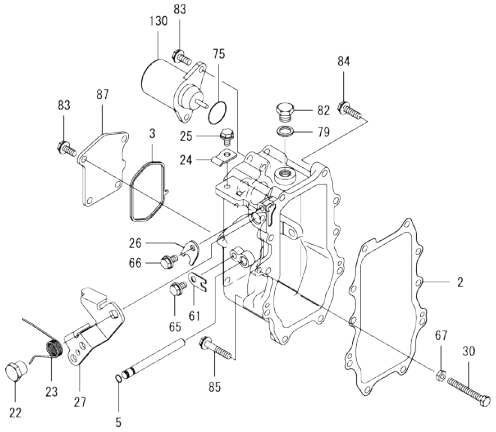

Remarks
* THIS FIGURE(GOVERNOR ASSY)IS INCORPORATED IN THE FUEL INJECTION PUMP ASSY(FIG.11).

(A)=4TNV94L-XHYB
(B)=4TNV94L-XHYB2
(C)=
(D)=
(E)=
(F)=

No.	Lev.	Parts No.	Description	Q'ty (A)	(B)	(C)	(D)	(E)	(F)	I	R
2	2	158560-61050	GASKET	1	1						
3	2	158560-61071	GASKET	1	1						
5	2	129155-51280	O-RING, S6	1	1						
22	2	129255-61410	NUT, M8	1	1						
23	2	123944-61420	SPRING, LEVER	1	1						
24	2	123944-61430	RETAINER	1	1						
25	2	26106-060102	BOLT, M6X 10 PLATED	1	1						
26	2	158560-61430	STOPPER, SHAFT	1	1						
27	2	158560-61442	LEVER, REGULATOR	1	1						
30	2	129155-61460	BOLT, LIMITING	1	1						
61	2	119660-61901	STOPPER, SHAFT	1	1						
65	2	26106-060102	BOLT, M6X 10 PLATED	1	1						
66	2	26106-060102	BOLT, M6X 10 PLATED	1	1						
67	2	26756-060002	NUT, LOCK M6	1	1						
75	2	158552-61900	O-RING	1	1						
79	2	22190-160002	WASHER, SEAL 16	1	1						
82	2	23887-160002	PLUG, 16	1	1						
83	2	26106-060142	BOLT, M6X 14 PLATED	6	6						
84	2	26106-060252	BOLT, M6X 25 PLATED	8	8						
85	2	26106-060402	BOLT, M6X 40 PLATED	2	2						
87	2	158560-61061	COVER, GOVERNOR CASE	1	1						
130	2	119233-77932	SOLENOID, STOP	1	1						

N:Old ←Yes/No→ New. Q:Old ←No/Yes→ New. R:Old ←Yes/Yes→ New. S:Old ←No/No→ New. W:Add. Z:Discontinued. F:Interchangeable by set. K:Q'ty Change

Copyright (C) YANMAR GLOBAL CS CO., LTD. All RightsReserved.

Fig.13. FUEL INJECTION VALVE

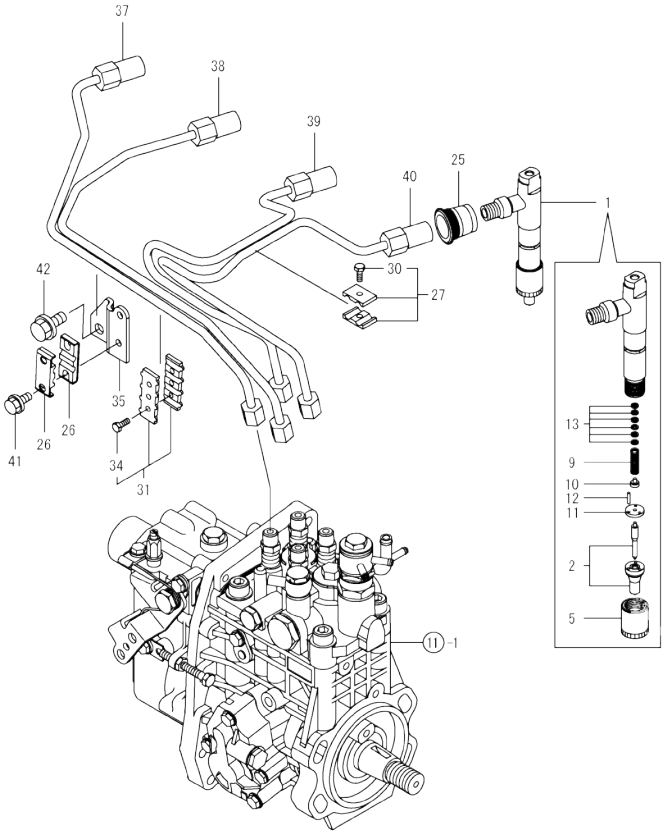

(A)=4TNV94L-XHYB
(B)=4TNV94L-XHYB2
(C)=
(D)=
(E)=
(F)=

No.	Lev.	Parts No.	Description	Q'ty (A)	(B)	(C)	(D)	(E)	(F)	I	R
1	1	729906-53100	FUEL INJECTOR ASSY	4	4						
2	2	129906-53000	NOZZLE ASSY, F.I.	4	4						
5	2	114250-53080	NUT, NOZZLE	4	4						
9	2	114250-53120	SPRING, NOZZLE	4	4						
10	2	114250-53130	SEAT, SPRING	4	4						
11	2	114250-53140	SPACER	4	4						
12	2	114250-53210	PIN	8	8						
13	2	114250-53400	SHIM SET	4	4						
25	1	123907-11601	SEAL, PIPE	4	4						
26	1	122780-59100	RETAINER	2	2						
27	1	119305-59120	RETAINER, PIPE	1	1						
30	2	129150-59131	BOLT, M4X14	1	1						
31	1	129550-59120	RETAINER, PIPE	1	1						
34	2	129150-59131	BOLT, M4X14	2	2						
35	1	129907-59710	SUPPORT	1	1						
37	1	129907-59810	PIPE ASSY, INJECTION	1	1						
38	1	129907-59820	PIPE ASSY, INJECTION	1	1						
39	1	129907-59830	PIPE ASSY, INJECTION	1	1						
40	1	129907-59840	PIPE ASSY, INJECTION	1	1						
41	1	26106-060162	BOLT, M6X 16 PLATED	2	2						
42	1	26106-080182	BOLT, M8X 18 PLATED	1	1						

N:Old ◄Yes/No► New. Q:Old ◄No/Yes► New. R:Old ◄Yes/Yes► New. S:Old ◄No/No► New. W:Add. Z:Discontinued. F:Interchangeable by set. K:Q'ty Change

Copyright (C) YANMAR GLOBAL CS CO., LTD. All RightsReserved.

Fig.14. FUEL LINE

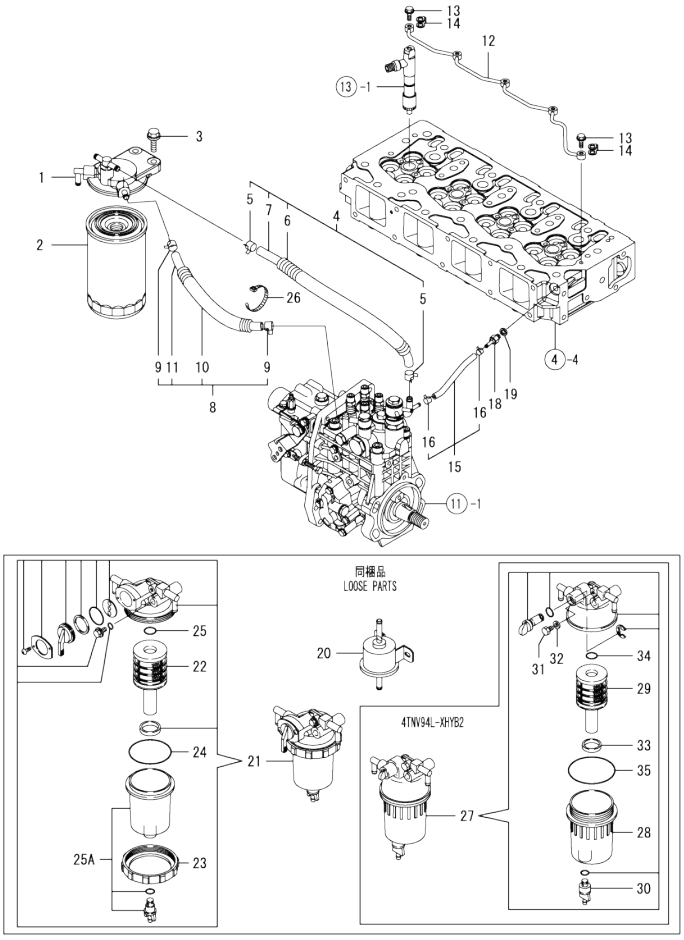

(A)=4TNV94L-XHYB
(B)=4TNV94L-XHYB2
(C)=
(D)=
(E)=
(F)=

No.	Lev.	Parts No.	Description	Q'ty (A)	(B)	(C)	(D)	(E)	(F)	I	R
1	1	129004-55610	BRACKET, FILTER	1							
1-1	1	129004-55611	BRACKET, FILTER	1							R
	(A=E10991)										
1-2	1	129004-55612	BRACKET, FILTER	1	1						R
	(A=E23834)										
2	1	123907-55800	FILTER, FUEL	1							
2-1	1	123907-55801	FILTER, FUEL	1	1						R
	(A=E25168)										
2-2	1	129907-55801	FILTER, FUEL		1						N
		(B=EZZZZZ)									
3	1	26106-080302	BOLT, M8X 30 PLATED	2	2						
4	1	129457-59010	HOSE ASSY, FUEL	1	1						
5	2	124766-59050	CLAMP, HOSE 11.5	2	2						
6	2	129957-59120	TUBE, CORRUGATED 15	1	1						
7	2	105025-59750	HOSE, FUEL	1	1						
8	1	129981-59010	HOSE ASSY, FUEL	1	1						
9	2	124766-59050	CLAMP, HOSE 11.5	2	2						
10	2	129950-59221	TUBE, CORRUGATED 15	1	1						
11	2	129980-59510	HOSE, FUEL	1	1						
12	1	129907-59140	PIPE ASSY, RETURN	1	1						
13	1	123907-59540	BOLT, PIPE JOINT M6	5	5						
14	1	123907-59550	GASKET	5	5						
15	1	129486-59551	HOSE ASSY, RETURN	1	1						
16	2	124722-59050	CLAMP, HOSE 9	2	2						
18	1	123907-59560	JOINT, HOSE	1	1						
19	1	22190-080002	WASHER, SEAL 6	1	1						
20	1	129612-52100	PUMP, FUEL FEED	1	1						
21	1	129906-55700	SEPARATOR ASSY,WATER	1							
22	2	119802-55710	ELEMENT	1							
23	2	129100-55690	RING, CUP RETAINING	1							
24	2	24321-000650	O-RING, 1AG65.0	1							
25	2	24311-000160	O-RING, 1AP16.0	1							
25A	2	119802-55730	CUP ASSY, SEPARATOR	1							W
	(A=FROM 1ST)										
26	1	121750-59890	BAND, NYLON	1	1						
27	1	129242-55710	SEPARATOR ASSY,WATER		1						
27-1	1	129245-55710	SEPARATOR ASSY,WATER		1						N
		(B=EZZZZZ)									
28	2	129242-55720	CUP, SEPARATOR		1						
28-1	2	129245-55720	CUP ASSY, SEPARATOR		1						N
		(B=EZZZZZ)									
29	2	129242-55730	ELEMENT, FUEL		1						
30	2	129242-55740	PLUG, DRAIN		1						
31	2	129242-55750	VALVE, AIR VENT		1						
32	2	129242-55760	GASKET, PLUG		1						
33	2	129242-55770	FLOAT		1						
34	2	24311-000160	O-RING, 1AP16.0		1						
35	2	24321-000750	O-RING, 1AG75.0		1						

N:Old $\xleftarrow[\text{No}]{\text{Yes}}$ New. Q:Old $\xleftarrow[\text{Yes}]{\text{No}}$ New. R:Old $\xleftarrow[\text{Yes}]{\text{Yes}}$ New. S:Old $\xleftarrow[\text{No}]{\text{No}}$ New. W:Add. Z:Discontinued. F:Interchangeable by set. K:Q'ty Change

Copyright (C) YANMAR GLOBAL CS CO., LTD. All RightsReserved.

Fig.15. STARTING MOTOR

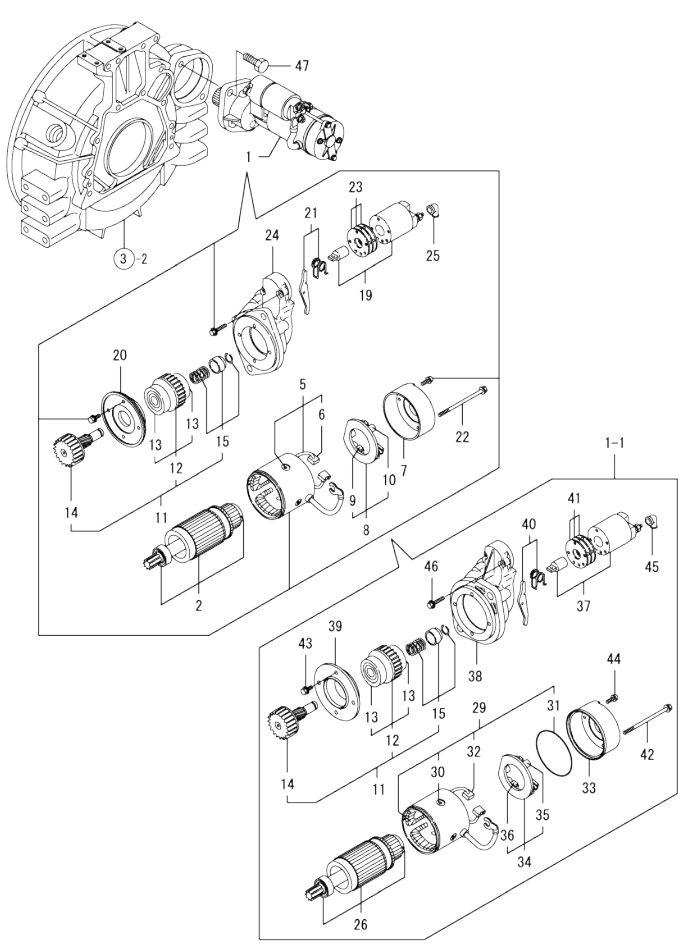

(A)=4TNV94L-XHYB (D)=
(B)=4TNV94L-XHYB2 (E)=
(C)= (F)=

No.	Lev.	Parts No.	Description	Q'ty (A)	(B)	(C)	(D)	(E)	(F)	I	R
1	1	123900-77010	STARTER ASSY	1							
1-1	1	129940-77010	STARTER ASSY	1	1					N	
	(A=E32875)										
2	2	123900-77400	ARMATURE ASSY	1						Z	
	(A=E32875)										
5	2	123900-77440	COIL ASSY, FIELD	1						Z	
	(A=E32875)										
6	3	123900-77450	BRUSH	2						Z	
	(A=E32875)										
7	2	123900-77460	COVER	1						Z	
	(A=E32875)										
8	2	123900-77480	HOLDER ASSY, BRUSH	1						Z	
	(A=E32875)										
9	3	123900-77450	BRUSH	2						Z	
	(A=E32875)										
10	3	121254-77590	SPRING, BRUSH	4						Z	
	(A=E32875)										
11	2	123900-77510	PINION ASSY	1	1						
12	3	123900-77520	CLUTCH ASSY	1	1						
13	4	X2240610100	BEARING, BALL	2	2						
14	3	123900-77540	SHAFT, PINION	1	1						
15	3	119131-77550	STOPPER SET, PINION	1	1						
19	2	129900-77591	SWITCH ASSY, MAGNET	1						Z	
	(A=E32875)										
20	2	123900-77610	RETAINER, BEARING	1						Z	
	(A=E32875)										
21	2	129900-77620	LEVER SET	1						Z	
	(A=E32875)										
22	2	123900-77640	BOLT, THROUGH	2						Z	
	(A=E32875)										
23	2	123900-77650	COVER KIT, DUST	1						Z	
	(A=E32875)										
24	2	123900-77710	CASE, GEAR	1						Z	
	(A=E32875)										
25	2	171008-77750	COVER, TERMINAL	1						Z	
	(A=E32875)										
26	2	129940-77100	ARMATURE ASSY	1	1					W	
	(A=E32875)										
29	2	129940-77130	COIL ASSY, FIELD	1	1					W	
	(A=E32875)										
30	3	129940-77140	SCREW, CORE SET	4	4					W	
	(A=E32875)										
31	3	129940-77150	O-RING	1	1					W	
	(A=E32875)										
32	3	129940-77160	BRUSH	2	2					W	
	(A=E32875)										
33	2	129940-77170	COVER	1	1					W	
	(A=E32875)										
34	2	129940-77180	HOLDER ASSY, BRUSH	1	1					W	
	(A=E32875)										
35	3	129940-77190	SPRING, BRUSH	1	1					W	

N:Old ←Yes/No→ New. Q:Old ←No/Yes→ New. R:Old ←Yes/Yes→ New. S:Old ←No/No→ New. W:Add. Z:Discontinued. F:Interchangeable by set. K:Q'ty Change

++ CONTINUE ++

Copyright (C) YANMAR GLOBAL CS CO., LTD. All RightsReserved.

Fig.15. STARTING MOTOR

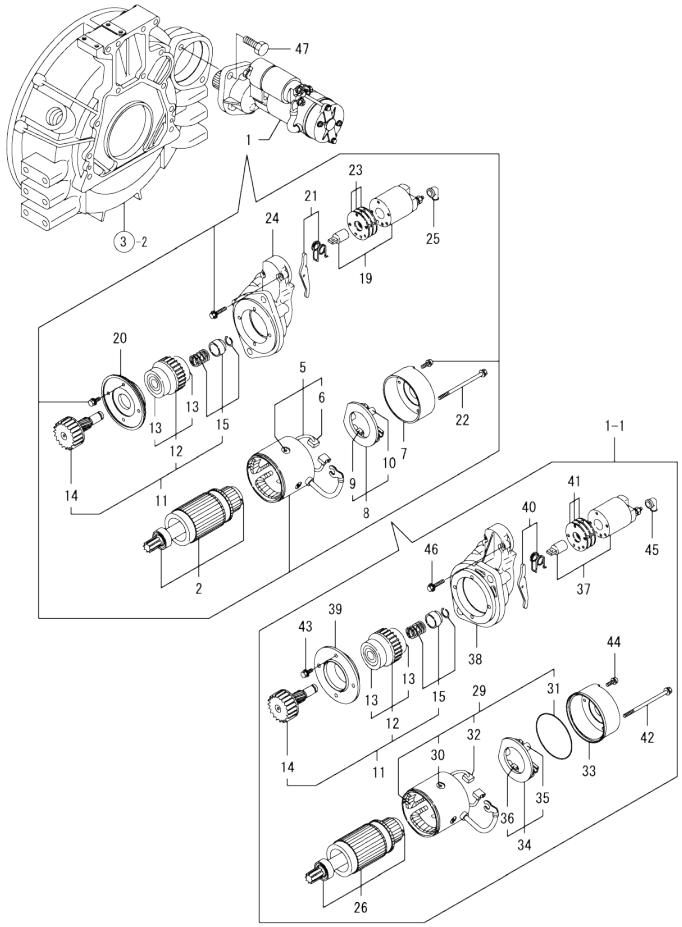

(A)=4TNV94L-XHYB (D)=
(B)=4TNV94L-XHYB2 (E)=
(C)= (F)=

No.	Lev.	Parts No.	Description	Q'ty (A)	(B)	(C)	(D)	(E)	(F)	I	R
		(A=E32875)									
36	3	129940-77200	BRUSH	2	2					W	
		(A=E32875)									
37	2	129940-77210	SWITCH ASSY, MAGNET	1	1					W	
		(A=E32875)									
38	2	129940-77220	CASE, GEAR	1	1					W	
		(A=E32875)									
39	2	129940-77230	RETAINER, BEARING	1	1					W	
		(A=E32875)									
40	2	129940-77240	LEVER SET	1	1					W	
		(A=E32875)									
41	2	129940-77250	COVER KIT, DUST	1	1					W	
		(A=E32875)									
42	2	129940-77260	BOLT, THROUGH	2	2					W	
		(A=E32875)									
43	2	129940-77270	BOLT	4	4					W	
		(A=E32875)									
44	2	129940-77280	SCREW	2	2					W	
		(A=E32875)									
45	2	121254-77810	COVER, TERMINAL	1	1					W	
		(A=E32875)									
46	2	114371-79070	BOLT	2	2					W	
		(A=E32875)									
47	1	26116-120252	BOLT, M12X 25 PLATED	2	2						

N:Old ←Yes/No→ New. Q:Old ←No/Yes→ New. R:Old ←Yes/Yes→ New. S:Old ←No/No→ New. W:Add. Z:Discontinued. F:Interchangeable by set. K:Q'ty Change

Copyright (C) YANMAR GLOBAL CS CO., LTD. All RightsReserved.

Fig.16. GENERATOR

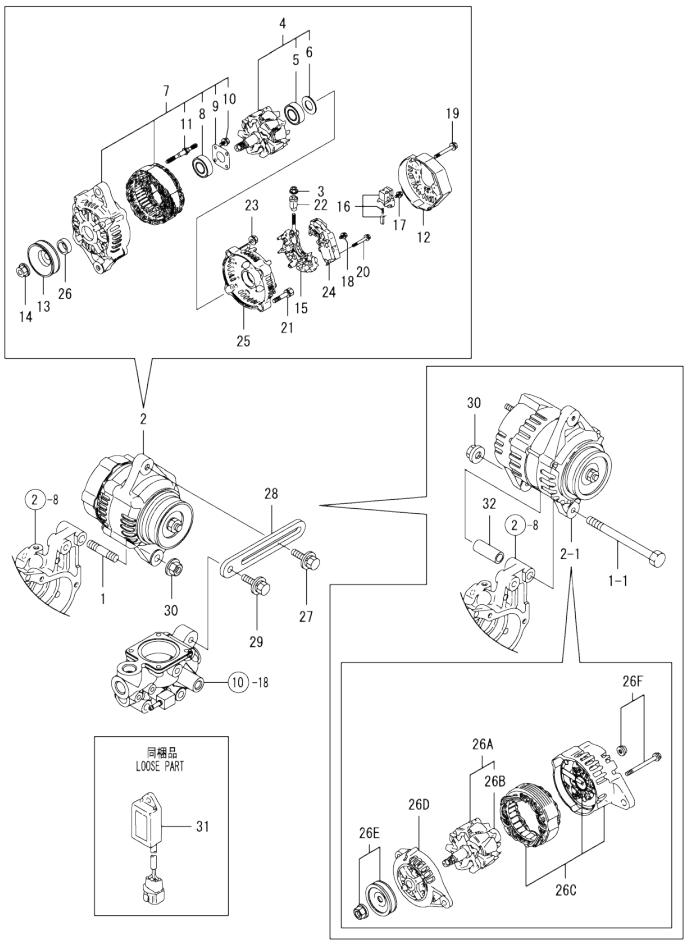

(A)=4TNV94L-XHYB
(B)=4TNV94L-XHYB2
(C)=
(D)=
(E)=
(F)=

No.	Lev.	Parts No.	Description	Q'ty (A)	(B)	(C)	(D)	(E)	(F)	I	R
1	1	129795-01900	BOLT, STUD M10X33	1							
1-1	1	26116-101202	BOLT, M10X120 PLATED	1							S
	(A=E23834)										
2	1	119626-77210	ALTERNATOR, 12V-55A	1							
2-1	1	123900-77210	ALTERNATOR, 12V-60A	1							N
	(A=E23834)										
3	2	X9490561001	NUT	1							Z
	(A=E23834)										
4	2	129052-77380	ROTOR ASSY	1							Z
	(A=E23834)										
5	3	123501-79240	BEARING, BALL	1							Z
	(A=E23834)										
6	3	119620-79250	COVER, BEARING	1							Z
	(A=E23834)										
7	2	129052-77422	FRAME ASSY	1							Z
	(A=E23834)										
8	3	119620-79200	BEARING, BALL	1							Z
	(A=E23834)										
9	3	119620-79210	RETAINER	1							Z
	(A=E23834)										
10	3	119620-79220	SCREW	4							Z
	(A=E23834)										
11	3	119620-79230	BOLT, STUD	2							Z
	(A=E23834)										
12	2	128401-77440	COVER	1							Z
	(A=E23834)										
13	2	119620-77461	PULLEY, GENERATOR	1							Z
	(A=E23834)										
14	2	119620-77471	NUT	1							Z
	(A=E23834)										
15	2	129052-79260	HOLDER	1							Z
	(A=E23834)										
16	2	129052-79270	HOLDER, BRUSH	1							Z
	(A=E23834)										
17	2	119620-79290	SCREW	6							Z
	(A=E23834)										
18	2	119620-79300	SCREW	1							Z
	(A=E23834)										
19	2	119620-79310	BOLT	3							Z
	(A=E23834)										
20	2	119620-79320	SCREW	2							Z
	(A=E23834)										
21	2	119620-79330	BOLT	2							Z
	(A=E23834)										
22	2	119620-79340	BUSH, INSULATION	1							Z
	(A=E23834)										
23	2	119620-79350	NUT	2							Z
	(A=E23834)										
24	2	129423-77710	REGULATOR ASSY	1							Z
	(A=E23834)										
25	2	119626-77450	FRAME	1							Z

N:Old ←Yes/No→ New. Q:Old ←No/Yes→ New. R:Old ←Yes/Yes→ New. S:Old ←No/No→ New. W:Add. Z:Discontinued. F:Interchangeable by set. K:Q'ty Change

++ CONTINUE ++

Copyright (C) YANMAR GLOBAL CS CO., LTD. All RightsReserved.

Fig.16. GENERATOR

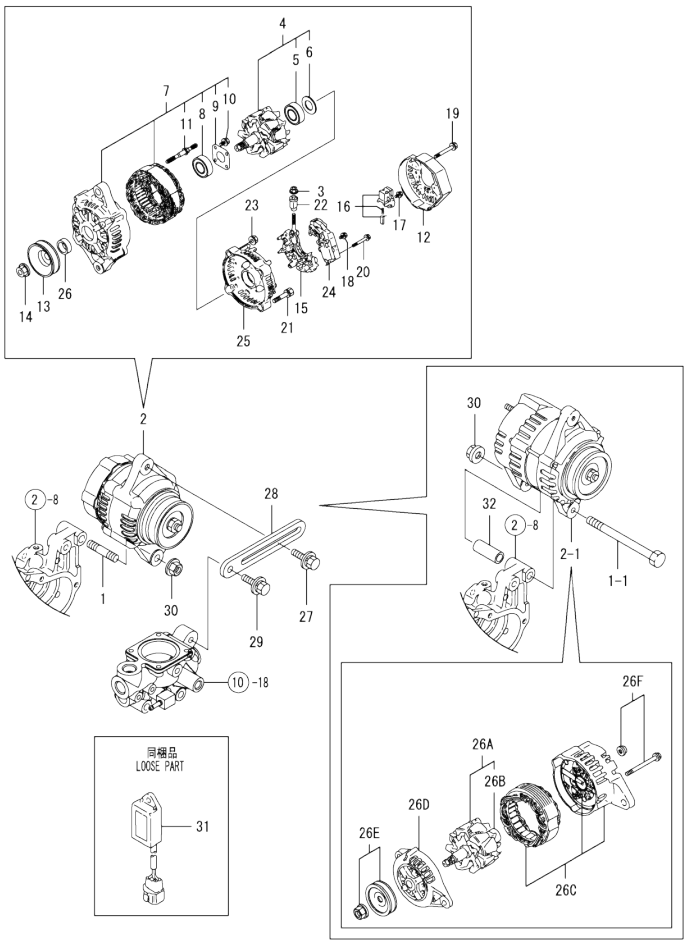

(A)=4TNV94L-XHYB (D)=
(B)=4TNV94L-XHYB2 (E)=
(C)= (F)=

No.	Lev.	Parts No.	Description	Q'ty (A)	(B)	(C)	(D)	(E)	(F)	I	R
		(A=E23834)									
26	2	119620-77490	COLLAR	1							Z
		(A=E23834)									
26A	2	123900-77700	ROTOR ASSY	1							W
		(A=E23834)									
26B	3	129612-77710	BEARING, BALL	1							W
		(A=E23834)									
26C	2	123900-77720	BRACKET ASSY	1							W
		(A=E23834)									
26D	2	123900-77730	BRACKET ASSY	1							W
		(A=E23834)									
26E	2	123900-77740	PULLEY, GENERATOR	1							W
		(A=E23834)									
26F	2	123900-77750	SCREW KIT	1							W
		(A=E23834)									
27	1	119810-77340	BOLT, ADJUST L=30	1							
28	1	129900-77330	ADJUSTER, BELT	1							
28-1	1	129916-77300	ADJUSTER, BELT	1							N
		(A=E23834)									
29	1	26014-080252	BOLT, M8X 25	1							
30	1	26306-100002	NUT, M10	1							
31	1	129211-77920	TIMER	1							
32	1	129470-77340	PIECE, DISTANCE	1							W
		(A=E23834)									

N:Old ←Yes/No→ New. Q:Old ←No/Yes→ New. R:Old ←Yes/Yes→ New. S:Old ←No/No→ New. W:Add. Z:Discontinued. F:Interchangeable by set. K:Q'ty Change

Copyright (C) YANMAR GLOBAL CS CO., LTD. All RightsReserved.

Fig.17. GENERATOR

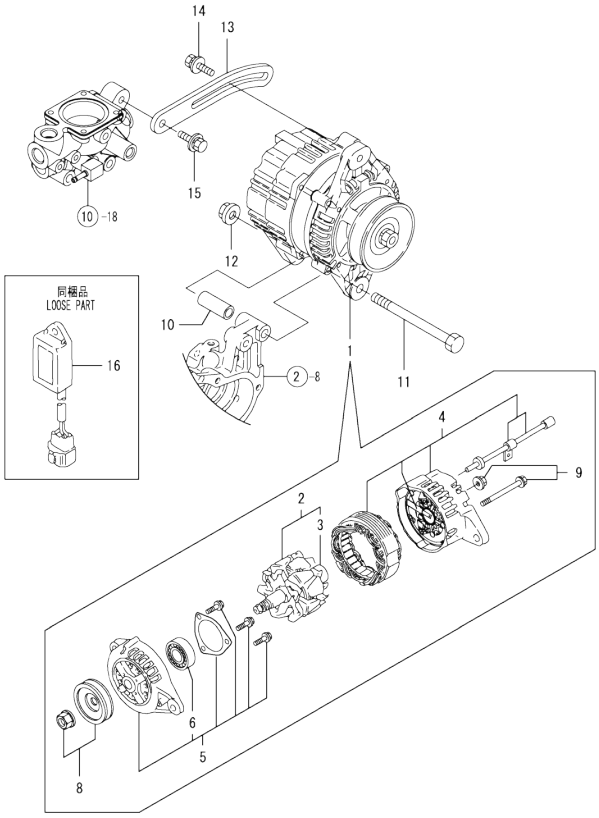

(A)=4TNV94L-XHYB
(B)=4TNV94L-XHYB2
(C)=
(D)=
(E)=
(F)=

No.	Lev.	Parts No.	Description	Q'ty (A)	(B)	(C)	(D)	(E)	(F)	I	R
1	1	123910-77210	ALTERNATOR, 12V-80A		1					Z	
		(B=EZZZZZ)									
2	2	123910-77740	ROTOR ASSY		1						
3	3	129900-77810	BEARING, BALL		1						
4	2	123910-77760	BRACKET ASSY		1						
5	2	129900-77890	BRACKET ASSY		1						
6	3	129900-77900	BEARING, BALL		1						
8	2	123910-77910	PULLEY, GENERATOR		1						
9	2	129900-77920	SCREW KIT		1						
10	1	129470-77340	PIECE, DISTANCE		1					Z	
		(B=EZZZZZ)									
11	1	26116-101202	BOLT, M10X120 PLATED		1					Z	
		(B=EZZZZZ)									
12	1	26306-100002	NUT, M10		1					Z	
		(B=EZZZZZ)									
13	1	129916-77300	ADJUSTER, BELT		1						
14	1	119810-77340	BOLT, ADJUST L=30		1						
15	1	26014-080252	BOLT, M8X 25		1					Z	
		(B=EZZZZZ)									
16	1	129211-77920	TIMER		1						

N:Old ←Yes/No→ New. Q:Old ←No/Yes→ New. R:Old ←Yes/Yes→ New. S:Old ←No/No→ New. W:Add. Z:Discontinued. F:Interchangeable by set. K:Q'ty Change

Copyright (C) YANMAR GLOBAL CS CO., LTD. All RightsReserved.

Fig.18. GASKET SET

(A)=4TNV94L-XHYB
(B)=4TNV94L-XHYB2
(C)=
(D)=
(E)=
(F)=

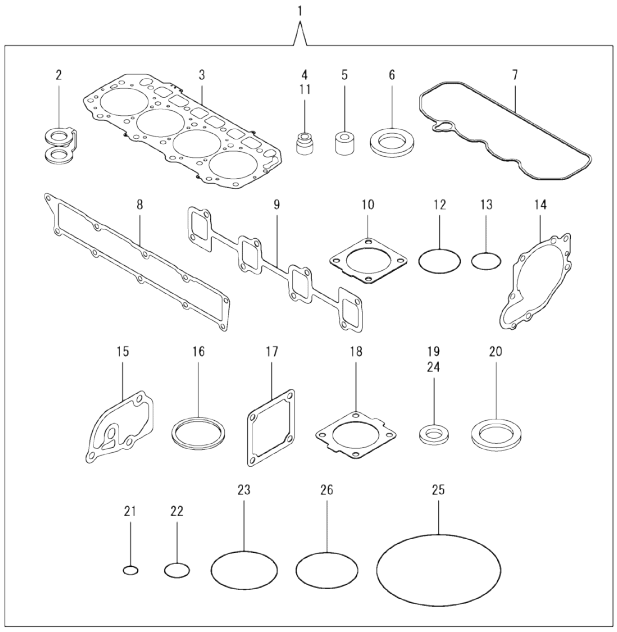

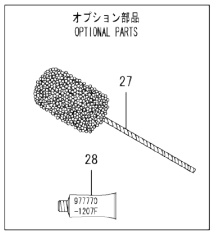

No.	Lev.	Parts No.	Description	Q'ty (A)	(B)	(C)	(D)	(E)	(F)	I	R
1	1	729906-92620	GASKET SET	1							1
1-1	1	729906-92621	GASKET SET	1	1					N	1
	(A=EXXX)										
1-2	1	129906-92660	GASKET SET	1	1					N	1
	(A=*2009.12)	(B=*2009.12)									
2	2	123907-59550	GASKET	5	5						
3	2	129906-01340	GASKET, HEAD	1	1						
3-1	2	129906-01350	GASKET, HEAD	1	1					N	
	(A=*2009.12)	(B=*2009.12)									
4	2	124160-11340	SEAL, VALVE STEM	8	8						
5	2	119802-11870	PROTECTOR, NOZZLE	4	4						
6	2	119625-11880	SEAT, NOZZLE	4	4						
7	2	129907-11310	GASKET, BONNET	1							
7-1	2	129933-11310	GASKET, BONNET	1	1					N	
	(A=E39505)										
8	2	129907-12110	GASKET, MANIFOLD	1	1						
9	2	129900-13251	GASKET, EXH.MANIFOLD	1	1						
10	2	129930-13200	GASKET, SILENCER	1							
10-1	2	129930-13201	GASKET, SILENCER	1	1					N	
	(A=E07992)										
11	2	124950-11340	SEAL, VALVE STEM	8							
11-1	2	119803-11340	SEAL, VALVE STEM	8	8					N	
	(A=E27944)										
12	2	129900-32030	O-RING, P20	2	2						
13	2	129900-32040	O-RING, P14	1	1						
14	2	129900-42020	GASKET, WATER PUMP	1	1						
15	2	129900-49870	GASKET, THERMOSTAT	1	1						
16	2	121850-49550	GASKET, THERMOSTAT	1	1						
17	2	121850-77021	GASKET, AIR HEATER	1	1						
18	2	121850-49540	GASKET, THERMOSTAT	1	1						
19	2	23414-080000	GASKET, 8X1.0	3							
19-1	2	23414-080000	GASKET, 8X1.0	1	1					K	
	(A=E05110)										
20	2	124465-44950	GASKET, 16	2	2						
21	2	24311-000070	O-RING, 1AP7.0	1	1						
22	2	24311-000120	O-RING, 1AP12.0	8	8						
23	2	24311-000320	O-RING, 1AP32.0	3	3						
24	2	22190-080002	WASHER, SEAL 6	7	7						
25	2	24341-000530	O-RING, 1AS53.0	1	1						
26	2	24351-030750	O-RING, 1A3075	1	1						
27	1	129400-92440	HONE, FLEX	1	1						1
28	1	977770-1207F	GASKET.LIQUID	1	1						1
29	1	119640-92750	TOOL, FILTER WRENCH	1	1					W	
	(A=EXXX)										

Remarks
(1) OPTIONAL PART.

N:Old ◄Yes/No► New. Q:Old ◄No/Yes► New. R:Old ◄Yes/Yes► New. S:Old ◄No/No► New. W:Add. Z:Discontinued. F:Interchangeable by set. K:Q'ty Change

Copyright (C) YANMAR GLOBAL CS CO., LTD. All RightsReserved.

Parts No. Index

Parts No.	Fig. No.	Ref. No.
105025-59750	14	7
105582-59150	10	25
114250-53080	13	5
114250-53120	13	9
114250-53130	13	10
114250-53140	13	11
114250-53210	13	12
114250-53400	13	13
114371-79070	15	46
119000-35140	9	3
119005-12060	5	8
119005-35151	9	25
119117-44760	10	16
119131-18320	6	5
119131-77550	15	15
119233-77932	12	130
119305-59120	13	27
119593-11301	4	28
119620-01750	3	12
119620-11180	4	16
119620-77461	16	13
119620-77471	16	14
119620-77490	16	26
119620-79200	16	8
119620-79210	16	9
119620-79220	16	10
119620-79230	16	11
119620-79250	16	6
119620-79290	16	17
119620-79300	16	18
119620-79310	16	19
119620-79320	16	20
119620-79330	16	21
119620-79340	16	22
119620-79350	16	23
119625-11880	4	26
	18	6
119626-77210	16	2
119626-77450	16	25
119640-61400	4	62
119640-92750	18	29
119660-61901	12	61
119802-11870	4	68
	18	5
119802-51590	11	59
119802-51600	11	60
119802-51680	11	64
119802-51690	11	65
119802-55710	14	22
119802-55730	14	25 A

Parts No.	Fig. No.	Ref. No.
119803-11340	4	18 -1
	18	11 -1
119810-77340	16	27
	17	14
120130-22301	8	22
121252-39450	9	12
121254-77590	15	10
121254-77810	15	45
121450-42450	10	36
121520-34810	9	2
121750-59890	14	26
121850-21130	8	12
121850-21290	8	5
121850-21920	8	6
121850-49540	10	20
	18	18
121850-49550	10	21
	18	16
121850-49800	10	23
121850-77021	5	5
	18	17
122780-59100	13	26
123501-79240	16	5
123900-13610	6	3
123900-13630	6	4
123900-25060	7	10
123900-77010	15	1
123900-77210	16	2 -1
123900-77400	15	2
123900-77440	15	5
123900-77450	15	6
		9
123900-77460	15	7
123900-77480	15	8
123900-77510	15	11
123900-77520	15	12
123900-77540	15	14
123900-77610	15	20
123900-77640	15	22
123900-77650	15	23
123900-77700	16	26 A
123900-77710	15	24
123900-77720	16	26 C
123900-77730	16	26 D
123900-77740	16	26 E
123900-77750	16	26 F
123907-03100	4	55
123907-03110	4	56
123907-03120	4	57
123907-03140	4	58

Parts No.	Fig. No.	Ref. No.
123907-11280	4	33
123907-11550	4	3
123907-11601	13	25
123907-11820	4	9
123907-11830	4	22
123907-25909	7	17
123907-39500	9	15
123907-55800	14	2
123907-55801	14	2 -1
123907-59540	14	13
123907-59550	14	14
	18	2
123907-59560	14	18
123910-77210	17	1
123910-77740	17	2
123910-77760	17	4
123910-77910	17	8
123944-61420	12	23
123944-61430	12	24
124160-01751	2	35
	4	50
124160-11340	4	17
	18	4
124160-11360	4	65
124465-44950	10	37
	18	20
124722-59050	10	41
		44
	14	16
124766-59050	14	5
		9
124950-11340	4	18
	18	11
128401-77440	16	12
129001-91810	2	24
		25
129004-55610	14	1
129004-55611	14	1 -1
129004-55612	14	1 -2
129005-59830	9	17
129052-77380	16	4
129052-77422	16	7
129052-79260	16	15
129052-79270	16	16
129100-01580	2	5
	3	1
129100-55690	14	23
129150-02450	7	4
129150-11230	4	36
		40

Parts No.	Fig. No.	Ref. No.
129150-11750	4	21
		37
		41
129150-14200	7	1
129150-25920	7	14
129150-35153	9	4
129150-59131	13	30
		34
129155-51280	12	5
129155-61460	12	30
129211-77920	16	31
	17	16
129242-55710	14	27
129242-55720	14	28
129242-55730	14	29
129242-55740	14	30
129242-55750	14	31
129242-55760	14	32
129242-55770	14	33
129245-55710	14	27 -1
129245-55720	14	28 -1
129255-61410	12	22
129400-92440	18	27
129423-77710	16	24
129457-59010	14	4
129470-77340	16	32
	17	10
129486-59551	14	15
129509-51390	11	20 A
129550-59120	13	31
129612-52100	14	20
129612-77710	16	26 B
129795-01900	16	1
129900-01200	1	31
129900-01250	1	5
129900-01850	2	41
129900-01870	2	42
129900-02020	1	7
129900-02340	1	34
129900-02341	1	34 -1
129900-02410	1	10
129900-02930	1	25
129900-02931	1	25 -1
129900-02940	1	37
129900-02941	1	37 -1
129900-07900	4	1
129900-13200	6	1
129900-13251	6	2
	18	9
129900-14100	7	7

Parts No. Index

Parts No.	Fig. No.	Ref. No.
129900-21200	8	4
129900-21600	8	15
129900-23000	8	24
129900-23001	8	24 -1
129900-23200	8	28
129900-23600	8	29
129900-23601	8	29 -1
129900-23610	8	32
129900-23611	8	32 -1
129900-23910	8	31
129900-23911	8	31 -1
129900-25100	7	11
129900-32001	2	11
129900-32030	2	22
	9	5
	18	12
129900-32040	2	23
	18	13
129900-34800	9	1
129900-35000	9	6
129900-42020	10	11
	18	14
129900-49870	10	32
	18	15
129900-77330	16	28
129900-77591	15	19
129900-77620	15	21
129900-77810	17	3
129900-77890	17	5
129900-77900	17	6
129900-77920	17	9
129902-21000	8	1
129906-01340	1	32
	18	3
129906-01350	1	32 -2
	18	3 -1
129906-01640	3	9
		14
129906-01720	3	8
129906-01960	11	130
129906-22050	8	18
129906-22080	8	16
129906-22090	8	16 -1
129906-22900	8	34 -1
129906-22910	8	34 -2
129906-34851	9	24
129906-51580	11	57
129906-53000	13	2
129906-55700	14	21
129906-92660	18	1 -2

Parts No.	Fig. No.	Ref. No.
129907-01190	1	33
129907-01331	1	32 -1
129907-01950	11	129
129907-03010	4	52
129907-03011	4	52 -1
129907-03060	4	53
129907-03061	4	53 -1
129907-03070	4	54
129907-11100	4	13
129907-11110	4	14
129907-11120	4	15
129907-11250	4	30
129907-11260	4	31
129907-11270	4	32
129907-11310	4	61
	18	7
129907-11320	4	51
129907-11321	4	51 -1
129907-11341	4	29
129907-11510	4	19
129907-11650	4	34
129907-11660	4	38
129907-11700	4	4
129907-11800	4	25
129907-11910	4	47
129907-11920	4	42
129907-11950	4	48
129907-12100	5	1
129907-12110	5	2
	18	8
129907-14400	7	2
129907-14581	7	3
129907-25900	7	17 -1
129907-39061	9	13
129907-42000	10	1
129907-49610	10	38
129907-49620	10	42
129907-49710	10	39
129907-49720	10	43
129907-49730	10	22
129907-49750	10	40
129907-51560	11	53
129907-55801	14	2 -2
129907-59140	14	12
129907-59710	13	35
129907-59810	13	37
129907-59820	13	38
129907-59830	13	39
129907-59840	13	40
129908-14581	7	3 -1

Parts No.	Fig. No.	Ref. No.
129915-77050	5	6
129915-77051	5	6 -1
129916-01790	3	7
129916-01800	2	4
129916-21610	8	10
129916-21620	8	9 -1
129916-21680	8	9
129916-22950	8	36 -1
129916-42410	10	14 -1
129916-44770	10	17
129916-49530	10	19
129916-59020	11	127
129916-77300	16	28 -1
	17	13
129927-42140	2	23 A
129928-42410	10	14 -2
129930-13200	6	7
	18	10
129930-13201	6	7 -1
	18	10 -1
129930-42450	10	14
129933-11310	4	61 -1
	18	7 -1
129940-01720	3	13
129940-77010	15	1 -1
129940-77100	15	26
129940-77130	15	29
129940-77140	15	30
129940-77150	15	31
129940-77160	15	32
129940-77170	15	33
129940-77180	15	34
129940-77190	15	35
129940-77200	15	36
129940-77210	15	37
129940-77220	15	38
129940-77230	15	39
129940-77240	15	40
129940-77250	15	41
129940-77260	15	42
129940-77270	15	43
129940-77280	15	44
129944-01500	2	8
129946-49810	10	18
129950-59221	14	10
129951-01740	2	6
129953-21581	8	13
129953-25300	7	16
129953-35000	9	26
129957-59120	14	6

Parts No.	Fig. No.	Ref. No.
129960-21640	8	8
129980-59510	14	11
129981-01600	3	2
129981-59010	14	8
144626-51090	11	9
158552-51570	11	54
158552-51571	11	54 -1
158552-51580	11	58
158552-51670	11	125
158552-51781	11	96
158552-52100	11	102
158552-52310	11	104
158552-52400	11	105
158552-52500	11	103
158552-61900	12	75
158553-51551	11	51
158553-51630	11	69
158553-51640	11	71
158553-51660	11	73
158553-51670	11	63
158553-51680	11	74
158557-51570	11	55
158560-51600	11	68
158560-61050	12	2
158560-61061	12	87
158560-61071	12	3
158560-61430	12	26
158560-61442	12	27
158563-51150	7	18
158563-51281	11	19
		20
158563-51330	11	29
158600-51270	11	18
158601-51550	11	52
158601-51570	11	56
158601-51650	11	72
158601-51770	11	95
158601-51790	11	97
171008-77750	15	25
171031-11741	2	37
171051-01921	1	6
171056-49120	10	31
22190-080002	9	18
		20
		22
	14	19
	18	24
22190-120002	11	98
		107
		108

Parts No. Index

Parts No.	Fig. No.	Ref. No.
22190-160002	12	79
22190-180002	11	99
		109
22217-180000	7	19
	11	110
22252-000300	8	23
22312-050140	11	111
22351-050010	11	112
22351-060012	1	11
22512-070140	7	8
	8	7
22857-500100	4	63
		64
23387-040800	10	26
23414-080000	10	27
		33
	18	19
		19 -1
23857-030000	9	19
23857-060000	11	113
23875-030000	10	28
23876-020000	4	10
23876-030000	1	12
		13
		14
	4	11
23887-120002	11	100
23887-160002	12	82
24311-000070	2	26
	11	114
	18	21
24311-000120	4	27
		66
	18	22
24311-000160	14	25
		34
24311-000320	2	39
		40
	4	67
	18	23
24321-000650	14	24
24321-000750	14	35
24341-000530	8	11
	18	25
24351-030750	2	27
	18	26
24356-010200	11	66
		115
24356-020210	11	116
24372-000150	11	67

Parts No.	Fig. No.	Ref. No.
25132-004100	10	15
25153-004400	10	15 -1
		15 -2
		45
26014-080162	10	17 -2
26014-080252	16	29
	17	15
26106-060102	11	117
	12	25
		65
		66
26106-060122	10	29
		29 -1
26106-060142	12	83
26106-060162	13	41
26106-060202	10	30
26106-060252	12	84
26106-060302	10	12
26106-060352	11	118
26106-060402	12	85
26106-080122	3	11
	9	11
		21
		23
	10	34
26106-080162	2	28
		29
		36
	4	2
	7	9
	9	31
	11	131
26106-080182	13	42
26106-080202	2	30
26106-080222	11	132
		133
26106-080302	14	3
26106-080352	5	7
26106-080402	2	31
		32
	4	44
26106-080452	2	33
26106-080552	5	3
	7	15
	10	13
26106-080602	4	45
		46
	10	35
26106-080802	10	17 -1
26106-080852	5	4

Parts No.	Fig. No.	Ref. No.
26106-100202	11	134
26116-101202	16	1 -1
	17	11
26116-120252	15	47
26206-100352	3	5
26206-100702	3	6
26216-100302	2	10
26226-080222	4	43
26306-080002	4	49
	6	6
26306-100002	2	34
	16	30
	17	12
26450-100452	11	121
26756-060002	12	67
26776-180002	7	20
	11	122
27241-300000	1	15
27241-400000	4	12
27310-070001	4	23
729900-02800	1	28
729900-02801	1	28 -1
729906-01560	1	1
729906-22900	8	34
729906-22950	8	36
729906-51330	11	1
729906-51331	11	1 -1
729906-51332	11	1 -2
729906-53100	13	1
729906-92620	18	1
729906-92621	18	1 -1
729907-01559	2	1
977770-1207F	2	38
	3	4
	4	69
	18	28
X2240610100	15	13
X9490561001	16	3

Parts No.	Fig. No.	Ref. No.