YANMAR

PARTS CATALOG

0CD50-M05310EN

Last update Apr., 2021

PREFACE

This parts catalog is the 1st edition of 4TNV94L-ZCPYBC for KOBELCO CONSTRUCTION MACHINERY CO., LTD.

Published : September, 2019

Contents

0CD50-M05310

Fig. No.	Fig. Name
ENGINE	
1.	CYLINDER BLOCK
2.	GEAR HOUSING
3.	FLYWHEEL HOUSING & OIL SUMP
4.	CYLINDER HEAD & BONNET
5.	SUCTION MANIFOLD
6.	EXHAUST MANIFOLD
7.	CAMSHAFT & DRIVING GEAR
8.	CRANKSHAFT & PISTON
9.	LUB. OIL SYSTEM
10.	COOLING WATER SYSTEM
11.	FUEL INJECTION PUMP
12.	GOVERNOR
13.	FUEL INJECTION VALVE
14.	FUEL PIPE
15.	STARTER MOTOR
16.	GENERATOR
17.	ELECTRONIC CONTROL UNIT(ECU)
18.	ACCESSORY
19.	GASKET SET

Fig.1. CYLINDER BLOCK

(A)=4TNV94L-ZCPYBC
(B)=
(C)=
(D)=
(E)=
(F)=

No.	Lev.	Parts No.	Description	Q'ty (A)	(B)	(C)	(D)	(E)	(F)	I	R
1	1	729906-01560	BLOCK ASSY, CYLINDER	1							
4	2	129900-01250	PLUG, 55	1							
5	2	171051-01921	PLUG, NPTF1	1							
6	2	129900-02020	BOLT, METAL CAP	10							
9	2	129900-02410	BUSH, CAMSHAFT	1							
10	2	27241-300000	PLUG 30	8							
20	2	129927-02930	BEARING ASSY, THRUST	2							
23	1	129900-01200	BOLT, CYLINDER HEAD	18							
24	1	129906-01350	GASKET, HEAD	1							
25	1	22351-060012	PIN, SPRING 6.0X12	2							
26	1	23876-030000	PLUG, R03	1							
27	1	23876-030000	PLUG, R03	1							
28	1	23876-030000	PLUG, R03	1							
29	1	129927-02340	BEARING ASSY,MAIN US	5							2
32	1	729927-02800	BEARING ASSY, MAIN	5							1
35	1	129927-02940	BEARING,THRUST0.25OS	2							3

Remarks
(1)Spare parts.
(2)Under-sized(U.S.=0.25) parts.
(3)Over-sized(O.S.=0.25) parts.

N:Old ◄Yes/No► New. Q:Old ◄No/Yes► New. R:Old ◄Yes/Yes► New. S:Old ◄No/No► New. W:Add. Z:Discontinued. F:Interchangeable by set. K:Q'ty Change

Copyright (C) 2019 YANMAR GLOBAL CS CO., LTD. All RightsReserved.

Fig.2. GEAR HOUSING

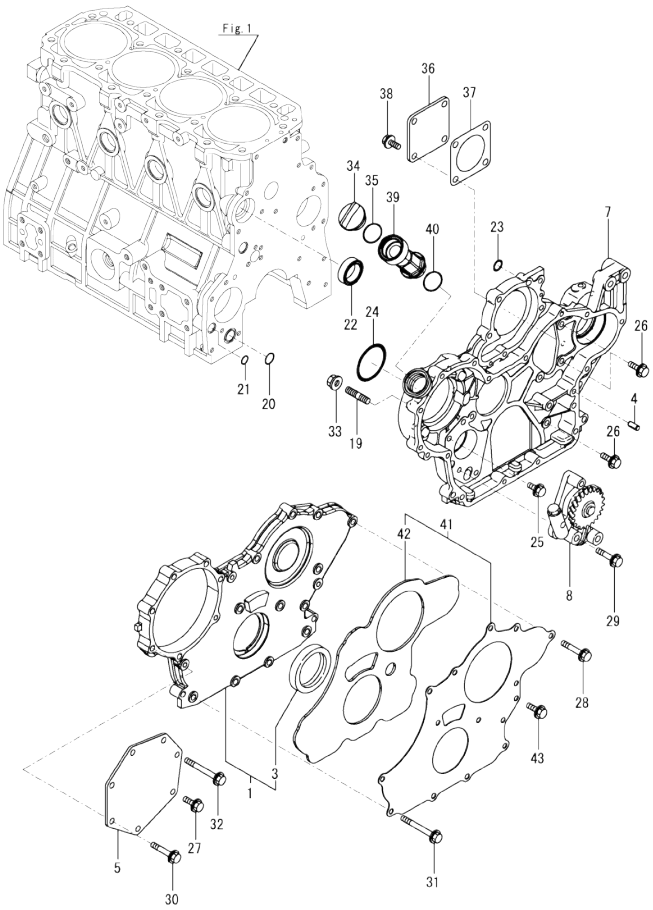

(A)=4TNV94L-ZCPYBC (D)=
(B)= (E)=
(C)= (F)=

No.	Lev.	Parts No.	Description	Q'ty (A)	(B)	(C)	(D)	(E)	(F)	I	R
1	1	729907-01559	COVER ASSY, CASE	1							
3	2	129916-01800	SEAL, OIL	1							
4	1	129100-01580	PIN, PARALLEL 8X16	4							
5	1	129951-01740	COVER, PUMP TIMING	1							
7	1	129907-01500	CASE, GEAR	1							
8	1	129900-32001	PUMP ASSY, OIL	1							
19	1	26216-100302	STUD, M10X 30	4							
20	1	129900-32030	O-RING, P20	1							
21	1	129900-32040	O-RING, P14	1							
22	1	129927-42140	GASKET, PUMP OUTLET	1							
23	1	24311-000070	O-RING, 1AP7.0	1							
24	1	24351-030750	O-RING, 1A3075	1							
25	1	26106-080162	BOLT, M8X 16 PLATED	1							
26	1	26106-080202	BOLT, M8X 20 PLATED	3							
27	1	26106-080202	BOLT, M8X 20 PLATED	1							
28	1	26106-080402	BOLT, M8X 40 PLATED	5							
29	1	26106-080452	BOLT, M8X 45 PLATED	3							
30	1	26106-080452	BOLT, M8X 45 PLATED	5							
31	1	26106-080702	BOLT, M8X 70 PLATED	6							
32	1	26106-080752	BOLT, M8X 75 PLATED	1							
33	1	26306-100002	NUT, M10	4							
34	1	124160-01751	CAP, FILLER	1							
35	1	24311-000320	O-RING, 1AP32.0	1							
36	1	124240-01871	COVER,HYDRAULIC PUMP	1							
37	1	129C26-01890	GASKET, PUMP	1							
38	1	26106-080162	BOLT, M8X 16 PLATED	4							
39	1	171031-11741	PIPE, FILLER	1							
40	1	24311-000320	O-RING, 1AP32.0	1							
41	1	129900-01850	COVER ASSY, CASE	1							
42	2	129900-01870	SPONGE, COVER	1							
43	1	26106-080162	BOLT, M8X 16 PLATED	3							

N:Old ◄Yes/No► New. Q:Old ◄No/Yes► New. R:Old ◄Yes/Yes► New. S:Old ◄No/No► New. W:Add. Z:Discontinued. F:Interchangeable by set. K:Q'ty Change

Copyright (C) 2019 YANMAR GLOBAL CS CO., LTD. All RightsReserved.

Fig.3. FLYWHEEL HOUSING & OIL SUMP

(A)=4TNV94L-ZCPYBC
(B)=
(C)=
(D)=
(E)=
(F)=

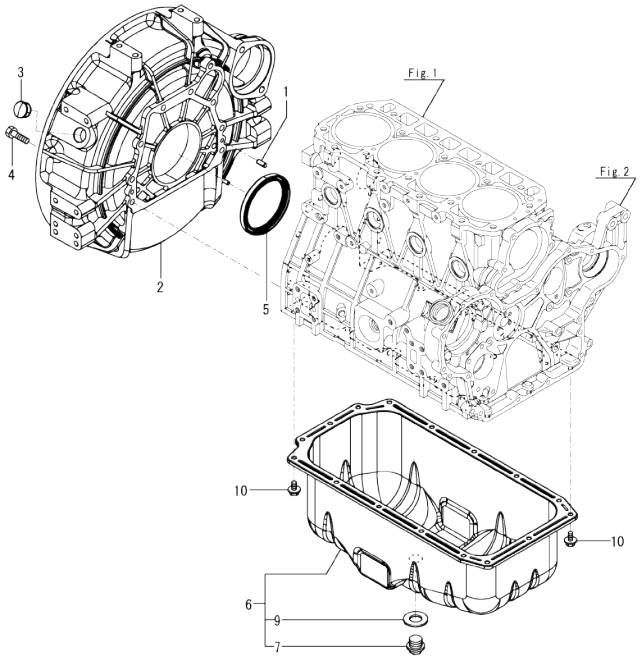

No.	Lev.	Parts No.	Description	Q'ty (A)	(B)	(C)	(D)	(E)	(F)	I	R
1	1	129100-01580	PIN, PARALLEL 8X16	2							
2	1	129915-01610	HOUSING, FLYWHEEL	1							
3	1	119000-01840	PLUG, RUBBER 25	1							
4	1	26206-100352	BOLT, M10X 35 PLATED	9							
5	1	129916-01790	SEAL, D115/95XT11	1							
6	1	129916-01710	OIL PAN ASSY	1							
7	2	119640-01640	PLUG, DRAIN M22	1							
9	2	22190-220002	WASHER, SEAL 22	1							
10	1	26106-080122	BOLT, M8X 12 PLATED	16							

N:Old ←Yes/No→ New. Q:Old ←No/Yes→ New, R:Old ←Yes/Yes→ New. S:Old ←No/No→ New. W:Add. Z:Discontinued. F:Interchangeable by set. K:Q'ty Change

Copyright (C) 2019 YANMAR GLOBAL CS CO., LTD. All RightsReserved.

Fig.4. CYLINDER HEAD & BONNET

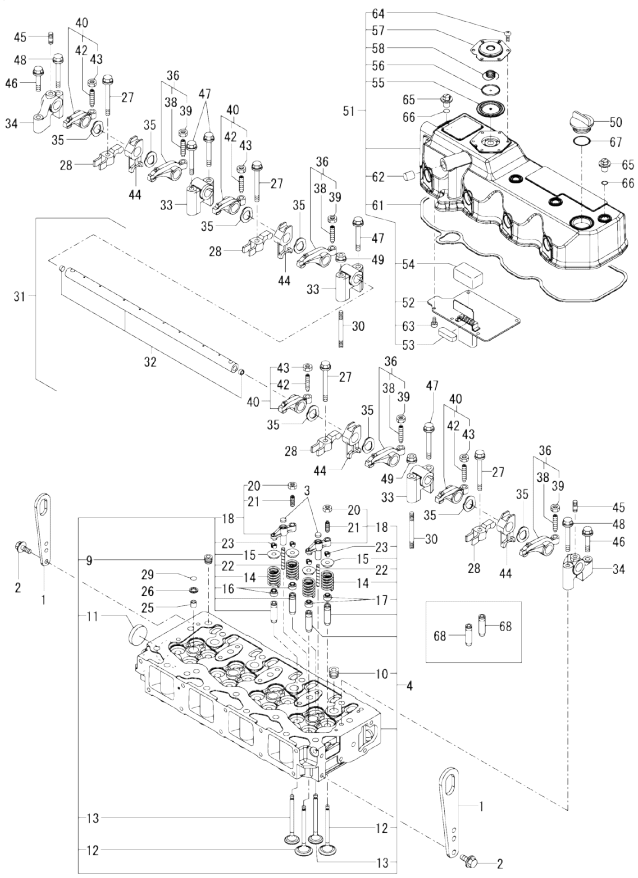

(A)=4TNV94L-ZCPYBC (D)=
(B)= (E)=
(C)= (F)=

No.	Lev.	Parts No.	Description	Q'ty (A)	(B)	(C)	(D)	(E)	(F)	I	R
1	1	129900-07900	LIFTER, ENGINE	2							
2	1	26106-080162	BOLT, M8X 16 PLATED	4							
3	1	123907-11550	SEAT, VALVE BRIDGE	8							
4	1	129907-11700	HEAD ASSY, CYLINDER	1							
9	2	23876-020000	PLUG, R02	1							
10	2	23876-030000	PLUG, R03	4							
11	2	27241-400000	PLUG, 40	1							
12	2	129907-11100	VALVE, INTAKE	8							
13	2	129907-11110	VALVE, EXHAUST	8							
14	2	129907-11120	SPRING, VALVE	16							
15	2	119620-11180	RETAINER, SPRING	16							
16	2	119803-11340	SEAL, VALVE STEM	8							
17	2	124160-11340	SEAL, VALVE STEM	8							
18	2	129907-11510	BRIDGE ASSY, VALVE	8							
20	3	129150-11750	NUT, M8XP1.0	8							
21	3	123907-11830	ADJUSTER, BRIDGE	8							
22	2	123907-11820	GUIDE, BRIDGE	8							
23	2	27310-070001	COTTER, 7	16							
25	1	119802-11870	PROTECTOR, NOZZLE	4							
26	1	119625-11880	SEAT, NOZZLE	4							
27	1	129907-11950	BOLT, VALVE HOLDER	4							
28	1	129907-11960	RETAINER, NOZZLE	4							
29	1	24311-000120	O-RING, 1AP12.0	4							
30	1	119593-11301	STUD, M8X80	2							
31	1	129907-11341	SUPPORT ASSY, ROCKER	1							
32	2	129907-11250	SHAFT, ROCKER ARM	1							
33	2	129907-11260	SUPPORT, ROCKER A	3							
34	2	129907-11270	SUPPORT, ROCKER B	2							
35	2	123907-11280	WASHER, WAVE	8							
36	2	129907-11650	ARM ASSY, ROCKER INT	4							
38	3	129150-11230	SCREW, VALVE ADJUST	4							
39	3	129150-11750	NUT, M8XP1.0	4							
40	2	129907-11660	ARM ASSY, ROCKER EXH	4							
42	3	129150-11230	SCREW, VALVE ADJUST	4							
43	3	129150-11750	NUT, M8XP1.0	4							
44	2	129907-11920	RETAINER, NOZZLE	4							
45	2	26226-080222	STUD, M8X 22	2							
46	1	26106-080402	BOLT, M8X 40 PLATED	2							
47	1	26106-080602	BOLT, M8X 60 PLATED	4							
48	1	26106-080602	BOLT, M8X 60 PLATED	2							
49	1	26306-080002	NUT, M8	2							
50	1	124160-01751	CAP, FILLER	1							
51	1	129907-11321	BONNET ASSY, HEAD	1							
52	2	129907-03011	PLATE, BAFFLE	1							
53	2	129907-03061	BAFFLE, BREATHER	1							
54	2	129907-03070	BAFFLE, BREATHER	1							
55	2	123907-03100	DIAPHRAGM, BREATHER	1							
56	2	123907-03110	PLATE, CENTER	1							
57	2	123907-03120	PLATE, BREATHER	1							
58	2	123907-03140	SPRING, DIAPHRAGM	1							
61	2	129933-11310	GASKET, BONNET	1							

Remarks
(1)Spare parts.

N:Old ←Yes/No→ New. Q:Old ←No/Yes→ New. R:Old ←Yes/Yes→ New. S:Old ←No/No→ New. W:Add. Z:Discontinued. F:Interchangeable by set. K:Q'ty Change

++ CONTINUE ++

Copyright (C) 2019 YANMAR GLOBAL CS CO., LTD. All RightsReserved.

Fig.4. CYLINDER HEAD & BONNET

(A)=4TNV94L-ZCPYBC
(B)=
(C)=
(D)=
(E)=
(F)=

No.	Lev.	Parts No.	Description	Q'ty (A)	(B)	(C)	(D)	(E)	(F)	I	R
62	2	119640-61400	PLUG	1							
63	2	22857-500100	SCREW, 5X10	6							
64	2	22857-500100	SCREW, 5X10	6							
65	1	124160-11360	KNOB, BONNET	4							
66	1	24311-000120	O-RING, 1AP12.0	4							
67	1	24311-000320	O-RING, 1AP32.0	1							
68	1	129907-11800	GUIDE, VALVE	16							1

Remarks
(1)Spare parts.

N:Old ←Yes/No→ New. Q:Old ←No/Yes→ New. R:Old ←Yes/Yes→ New. S:Old ←No/No→ New. W:Add. Z:Discontinued. F:Interchangeable by set. K:Q'ty Change

Copyright (C) 2019 YANMAR GLOBAL CS CO., LTD. All RightsReserved.

Fig.5. SUCTION MANIFOLD

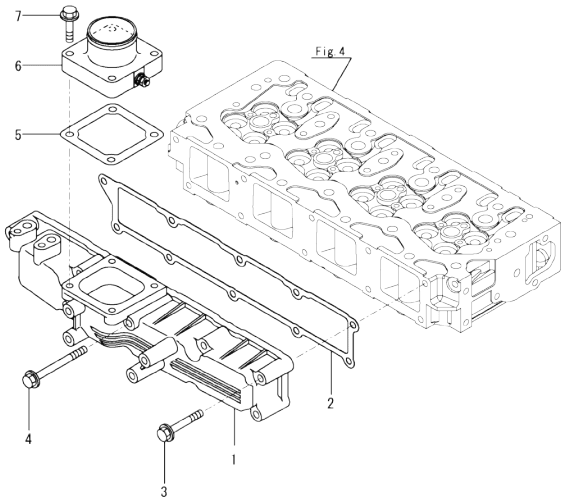

(A)=4TNV94L-ZCPYBC (D)=
(B)= (E)=
(C)= (F)=

No.	Lev.	Parts No.	Description	Q'ty (A)	(B)	(C)	(D)	(E)	(F)	I	R
1	1	129907-12100	MANIFOLD, INTAKE	1							
2	1	129907-12110	GASKET, MANIFOLD	1							
3	1	26106-080552	BOLT, M8X 55 PLATED	9							
4	1	26106-080852	BOLT, M8X 85 PLATED	1							
5	1	121850-77021	GASKET, AIR HEATER	1							
6	1	129915-77051	HEATER, AIR 12V	1							
7	1	26106-080352	BOLT, M8X 35 PLATED	4							

N:Old ◄Yes/No► New. Q:Old ◄No/Yes► New. R:Old ◄Yes/Yes► New. S:Old ◄No/No► New. W:Add. Z:Discontinued. F:Interchangeable by set. K:Q'ty Change

Copyright (C) 2019 YANMAR GLOBAL CS CO., LTD. All RightsReserved.

Fig.6. EXHAUST MANIFOLD

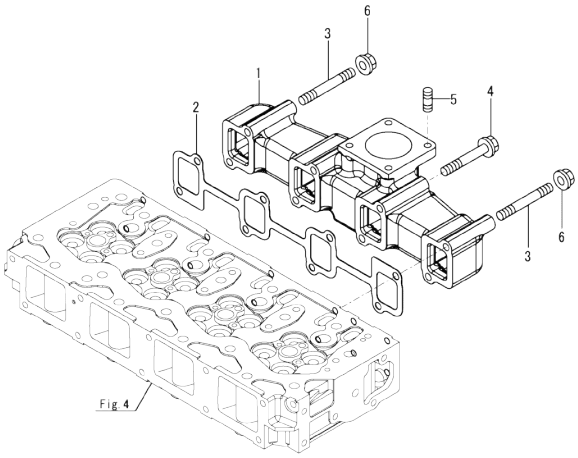

(A)=4TNV94L-ZCPYBC
(B)=
(C)=
(D)=
(E)=
(F)=

No.	Lev.	Parts No.	Description	Q'ty (A)	(B)	(C)	(D)	(E)	(F)	I	R
1	1	129900-13200	MANIFOLD, EXHAUST	1							
2	1	129900-13251	GASKET, MANIFOLD	1							
3	1	123900-13610	STUD, M8X80	2							
4	1	129E00-13640	BOLT, M8X80 10.9T	6							
5	1	119131-18320	STUD, M8X22	4							
6	1	26306-080002	NUT, M8	2							

N:Old ◄Yes/No► New. Q:Old ◄No/Yes► New. R:Old ◄Yes/Yes► New. S:Old ◄No/No► New. W:Add. Z:Discontinued. F:Interchangeable by set. K:Q'ty Change

Copyright (C) 2019 YANMAR GLOBAL CS CO., LTD. All RightsReserved.

Fig.7. CAMSHAFT & DRIVING GEAR

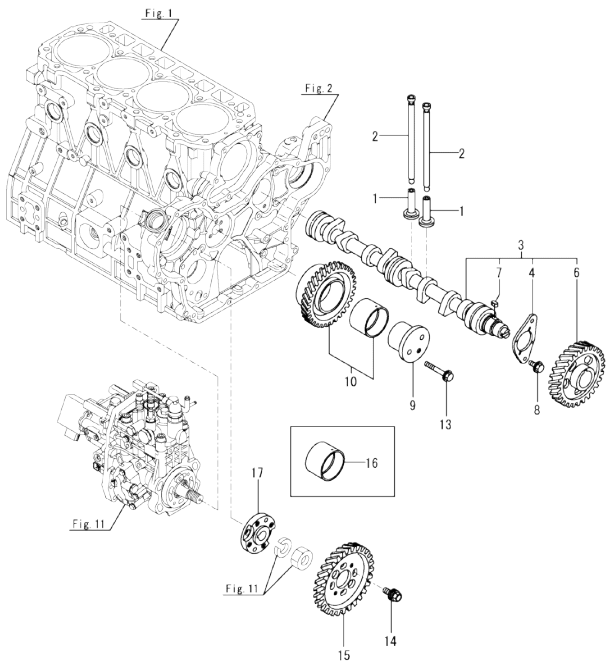

(A)=4TNV94L-ZCPYBC (D)=
(B)= (E)=
(C)= (F)=

No.	Lev.	Parts No.	Description	Q'ty (A)	(B)	(C)	(D)	(E)	(F)	I	R
1	1	129150-14200	TAPPET	8							
2	1	129907-14400	ROD, PUSH	8							
3	1	129932-14580	CAMSHAFT ASSY	1							
4	2	129150-02450	METAL, THRUST	1							
6	2	129900-14100	GEAR, CAMSHAFT	1							
7	2	22512-070140	KEY, 7X 14	1							
8	1	26106-080142	BOLT, M8X 14 PLATED	2							
9	1	123900-25060	SHAFT, IDLE GEAR	1							
10	1	129927-25100	GEAR ASSY, IDLE	1							
13	1	26106-080552	BOLT, M8X 55 PLATED	3							
14	1	129953-25300	BOLT, PUMP BODY	4							
15	1	129907-25900	GEAR, PUMP	1							
16	1	129927-25920	BUSH, IDLE GEAR	1							1
17	1	158563-51150	FLANGE	1							

Remarks
(1)Spare parts.

N:Old ◄Yes/No► New. Q:Old ◄No/Yes► New. R:Old ◄Yes/Yes► New. S:Old ◄No/No► New. W:Add. Z:Discontinued. F:Interchangeable by set. K:Q'ty Change

Copyright (C) 2019 YANMAR GLOBAL CS CO., LTD. All RightsReserved.

Fig.8. CRANKSHAFT & PISTON

(A)=4TNV94L-ZCPYBC
(B)=
(C)=
(D)=
(E)=
(F)=

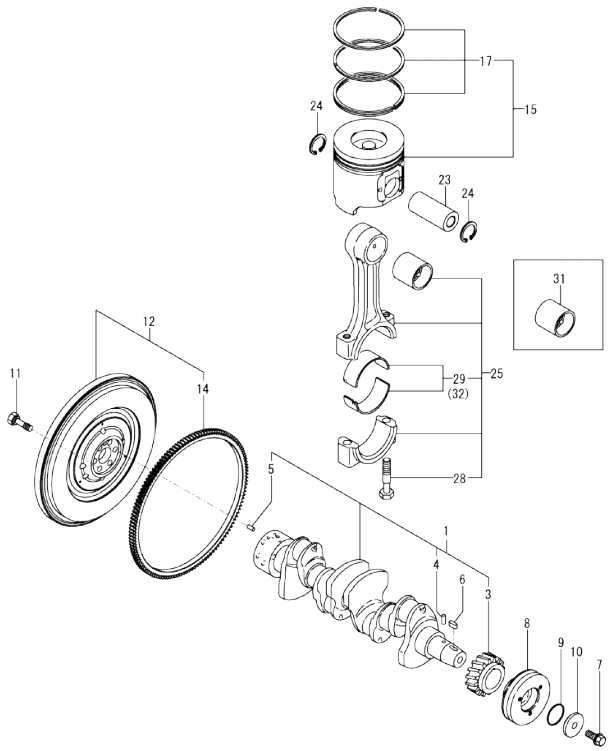

No.	Lev.	Parts No.	Description	Q'ty (A)	(B)	(C)	(D)	(E)	(F)	I	R
1	1	129902-21000	CRANKSHAFT ASSY	1							
3	2	129900-21200	GEAR, CRANKSHAFT	1							
4	2	121850-21290	PIN, CRANK GEAR	1							
5	2	121850-21920	PIN, PARALLEL 10X22	1							
6	1	22512-070140	KEY, 7X 14	1							
7	1	129916-21610	BOLT, V-PULLEY	1							
8	1	129907-21650	V-PULLEY, CRANKSHAFT	1							
9	1	129960-21930	GASKET, WASHER	1							
10	1	129960-21940	WASHER, V-PULLEY	1							
11	1	121850-21130	BOLT, FLYWHEEL	6							
12	1	129932-21580	FLYWHEEL ASSY	1							
14	2	127410-21480	GEAR, RING Z=129	1							
15	1	129984-22100	PISTON ASSY	4							
17	2	129984-22050	RING ASSY, PISTON	4							
23	1	120130-22301	PIN, PISTON	4							
24	1	22252-000300	RING, 30	8							
25	1	129900-23001	ROD ASSY, CONNECTING	4							
28	2	129900-23200	BOLT, CONNECTING ROD	8							
29	2	129927-23600	BEARING ASSY, PIN	4							
31	1	129900-23911	METAL, PISTON PIN	4							1
32	1	129927-23610	BEARING ASSY, PIN US	4							2

Remarks
(1)Spare parts.
(2)Under-sized(U.S.=0.25) parts.

N:Old $\frac{\text{Yes}}{\text{No}}$ New. Q:Old $\frac{\text{No}}{\text{Yes}}$ New. R:Old $\frac{\text{Yes}}{\text{Yes}}$ New. S:Old $\frac{\text{No}}{\text{No}}$ New. W:Add. Z:Discontinued. F:Interchangeable by set. K:Q'ty Change

Copyright (C) 2019 YANMAR GLOBAL CS CO., LTD. All RightsReserved.

Fig.9. LUB. OIL SYSTEM

(A)=4TNV94L-ZCPYBC
(B)=
(C)=
(D)=
(E)=
(F)=

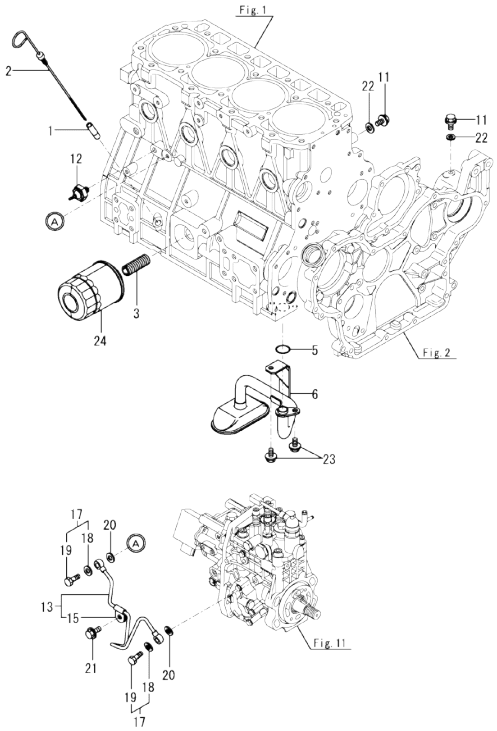

No.	Lev.	Parts No.	Description	Q'ty (A)	(B)	(C)	(D)	(E)	(F)	I	R
1	1	121520-34810	GUIDE, DIPSTICK	1							
2	1	129906-34851	DIPSTICK, OIL	1							
3	1	119000-35140	BOLT, FILTER	1							
5	1	129900-32030	O-RING, P20	1							
6	1	129953-35000	PIPE ASSY, OIL INLET	1							
11	1	26106-080122	BOLT, M8X 12 PLATED	2							
12	1	114250-39450	SWITCH, HYDRAULIC	1							
13	1	129927-39060	PIPE ASSY, OIL	1							
15	2	123907-39500	RETAINER, PIPE	1							
17	1	129005-59830	BOLT ASSY, JOINT M8	2							
18	2	22190-080002	WASHER, SEAL 8	2							
19	2	23857-030000	BOLT, JOINT 3	2							
20	1	22190-080002	WASHER, SEAL 8	2							
21	1	26106-080122	BOLT, M8X 12 PLATED	1							
22	1	22190-080002	WASHER, SEAL 8	2							
23	1	26106-080122	BOLT, M8X 12 PLATED	2							
24	1	119005-35151	FILTER, OIL D80X100	1							1

Remarks
(1)Spare parts.

N:Old $\frac{\text{Yes}}{\text{No}}$ New. Q:Old $\frac{\text{No}}{\text{Yes}}$ New. R:Old $\frac{\text{Yes}}{\text{Yes}}$ New. S:Old $\frac{\text{No}}{\text{No}}$ New. W:Add. Z:Discontinued. F:Interchangeable by set. K:Q'ty Change

Copyright (C) 2019 YANMAR GLOBAL CS CO., LTD. All RightsReserved.

Fig.10. COOLING WATER SYSTEM

(A)=4TNV94L-ZCPYBC
(B)=
(C)=
(D)=
(E)=
(F)=

No.	Lev.	Parts No.	Description	Q'ty (A)	(B)	(C)	(D)	(E)	(F)	I	R
1	1	129900-42004	PUMP ASSY, CW	1							
10	1	129900-42020	GASKET, WATER PUMP	1							
11	1	26106-060302	BOLT, M6X 30 PLATED	2							
12	1	26106-080552	BOLT, M8X 55 PLATED	5							
13	1	129900-42450	V-PULLEY, PUMP	1							
14	1	25152-004200	V-BELT, A42	1							
15	1	129631-44740	FAN, COOLING D=430X7	1							
16	1	129900-44760	SPACER, FAN	1							
17	1	26106-080852	BOLT, M8X 85 PLATED	4							
18	1	129927-49820	CASE ASSY,THERMOSTAT	1							
19	2	129927-44900	SENSOR, TEMPERATURE	1							
20	2	129916-49530	COVER, THERMOSTAT	1							
21	2	121850-49540	GASKET, THERMOSTAT	1							
22	2	121850-49550	GASKET, THERMOSTAT	1							
23	2	121850-49811	THERMOSTAT, 71C	1							
25	2	22190-120002	WASHER, SEAL 12	1							
26	2	23875-030000	PLUG, R03	2							
27	2	26106-060202	BOLT, M6X 20 PLATED	4							
28	1	129900-49870	GASKET, THERMOSTAT	1							
29	1	23414-080000	GASKET, 8X1.0	1							
30	1	26106-080122	BOLT, M8X 12 PLATED	1							
31	1	26106-080602	BOLT, M8X 60 PLATED	3							
32	1	171056-49120	PLUG, DRAIN R1/4	1							
33	1	121450-42450	PLUG, M16	2							
34	1	124465-44950	GASKET, 16	2							

N:Old ←Yes/No→ New. Q:Old ←No/Yes→ New. R:Old ←Yes/Yes→ New. S:Old ←No/No→ New. W:Add. Z:Discontinued. F:Interchangeable by set. K:Q'ty Change

Copyright (C) 2019 YANMAR GLOBAL CS CO., LTD. All RightsReserved.

Fig.11. FUEL INJECTION PUMP

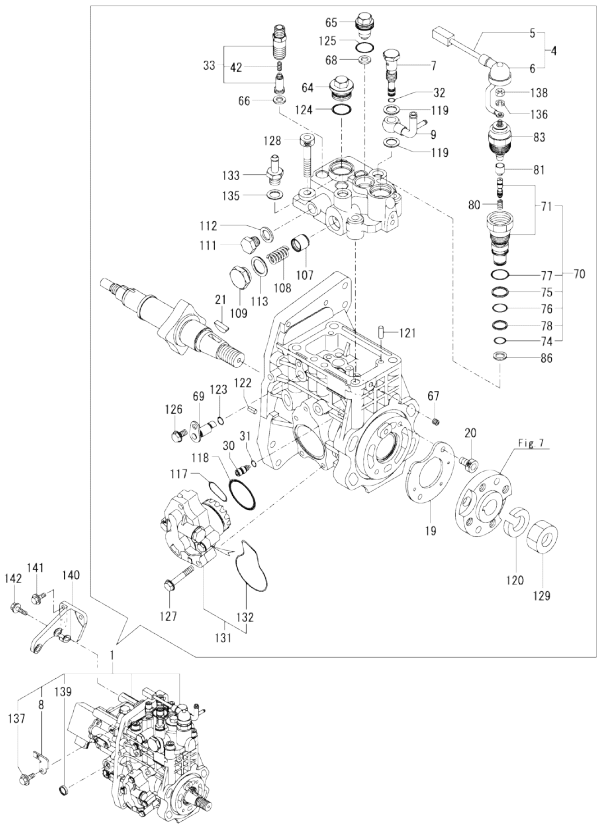

Remarks
(1)Governor(Fig.12) is incorporated in this Fuel Injection Pump(No.1).
(1)Eco pump
Make sure to update the engines ECU information when replacing the Eco pump.
Failing to do so will result in engine malfunction.

(A)=4TNV94L-ZCPYBC
(B)=
(C)=
(D)=
(E)=
(F)=

No.	Lev.	Parts No.	Description	Q'ty (A)	(B)	(C)	(D)	(E)	(F)	I	R
1	1	729984-51340	FIE ASSY	1							1
4	2	129927-51650	HARNESS ASSY, WIRE	1							
5	3	129927-51660	HARNESS	1							
6	3	129263-77941	CAP, RUBBER	1							
7	2	158601-51650	JOINT, OVERFLOW	1							
8	2	129927-51670	BRACKET	1							
9	2	158552-51670	JOINT, OVERFLOW	1							
19	2	129928-51900	COVER, OIL	1							
20	2	129008-51920	BOLT, M6X10	2							
21	2	144626-51090	KEY, FEATHER 5X19	1							
30	2	158600-51270	STOPPER, TAPPET	1							
31	2	158563-51281	O-RING, 4D S6	1							
32	2	158563-51281	O-RING, 4D S6	1							
33	2	129509-51390	VALVE ASSY, DELIVERY	4							
42	3	158563-51330	SPRING, DELIVERY	4							
64	2	158601-51550	PLUG, M22	1							
65	2	129907-51560	PLUG, M16	1							
66	2	158552-51571	GASKET, BARREL PLUG	4							
67	2	158557-51570	PLUG, RACK	1							
68	2	129906-51580	GASKET, BARREL PLUG	1							
69	2	158552-51580	LIFTER, LINK	1							
70	2	129657-51590	TIMER ASSY	1							
71	3	129657-51600	TIMER ASSY	1							
74	3	158553-51670	O-RING, PUMP TIMER	1							
75	3	119802-51680	RING, BACKUP	1							
76	3	119802-51690	O-RING, 1016	1							
77	3	24356-190200	O-RING, 4D19020	1							
78	3	24372-000150	RING, BACK UP T2P15	1							
80	2	119852-51630	SPRING, TIMER	1							
81	2	119852-51640	CAP, TIMER	1							
83	2	119852-51650	VALVE ASSY, SOLENOID	1							
86	2	158553-51680	GASKET, TIMER	1							
107	2	158601-51770	PISTON, ACCUMLATOR	1							
108	2	158552-51781	SPRING, ACCUMULATOR	1							
109	2	158601-51790	PLUG, ACCUMULATOR	1							
111	2	158553-51930	PLUG, M12	1							
112	2	22190-120002	WASHER, SEAL 12	1							
113	2	22190-180002	WASHER, SEAL 18	1							
117	2	158552-52311	O-RING, FEED PUMP	1							
118	2	158552-52400	O-RING, 4E S42	1							
119	2	22190-120002	WASHER, SEAL 12	2							
120	2	22217-180000	WASHER, SPRING 18	1							
121	2	22312-050140	PIN, PARALLEL 5X14	2							
122	2	22351-050010	PIN, SPRING 5.0X10	2							
123	2	24311-000070	O-RING, 1AP7.0	1							
124	2	24356-190200	O-RING, 4D19020	1							
125	2	24356-240210	O-RING, 4D24021	1							
126	2	26106-060102	BOLT, M6X 10 PLATED	1							
127	2	26106-060352	BOLT, M6X 35 PLATED	4							
128	2	26450-100452	BOLT, M10X 45	4							
129	2	26776-180002	NUT, LOCK M18	1							

N:Old ←Yes/No→ New, Q:Old ←No/Yes→ New, R:Old ←Yes/Yes→ New, S:Old ←No/No→ New, W:Add, Z:Discontinued, F:Interchangeable by set, K:Q'ty Change

++ CONTINUE ++

Copyright (C) 2019 YANMAR GLOBAL CS CO., LTD. All RightsReserved.

Fig.11. FUEL INJECTION PUMP

(A)=4TNV94L-ZCPYBC
(B)=
(C)=
(D)=
(E)=
(F)=

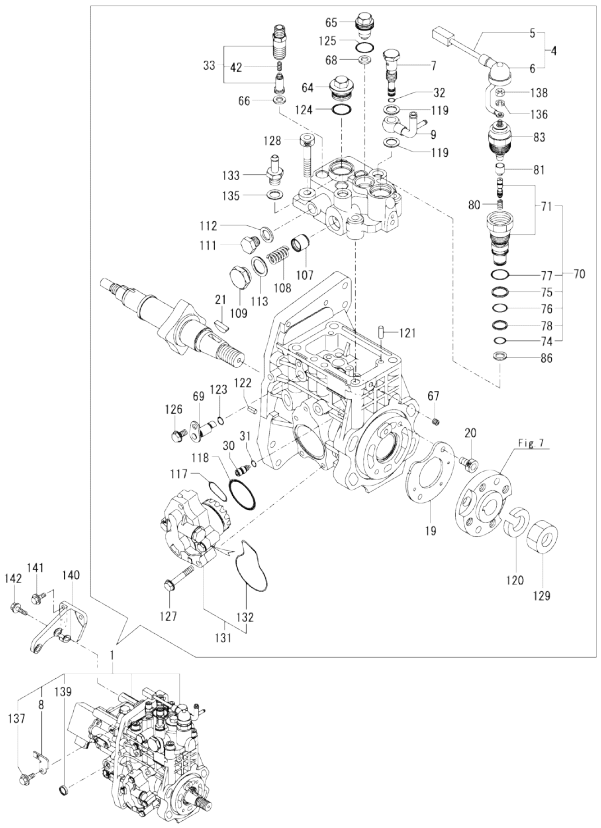

No.	Lev.	Parts No.	Description	Q'ty (A)	(B)	(C)	(D)	(E)	(F)	I	R
131	2	158552-52100	PUMP ASSY, FUEL FEED	1							
132	3	158552-52500	O-RING, PUMP INNER	1							
133	2	119934-59910	JOINT, PIPE	1							
135	2	22190-120002	WASHER, SEAL 12	1							
136	2	22217-050000	WASHER, SPRING 5	1							
137	2	26106-060122	BOLT, M6X 12 PLATED	1							
138	2	26716-050002	NUT, M5	1							
139	2	27241-160000	PLUG, 16	1							
140	1	129927-51250	RETAINER, FUEL PUMP	1							
141	1	26106-080202	BOLT, M8X 20 PLATED	3							
142	1	26106-080302	BOLT, M8X 30 PLATED	3							

Remarks
(1)Governor(Fig.12) is incorporated in this Fuel Injection Pump(No.1).
(1)Eco pump
Make sure to update the engines ECU information when replacing the Eco pump.
Failing to do so will result in engine malfunction.

N:Old ←Yes/No→ New. Q:Old ←No/Yes→ New. R:Old ←Yes/Yes→ New. S:Old ←No/No→ New. W:Add. Z:Discontinued. F:Interchangeable by set. K:Q'ty Change

Copyright (C) 2019 YANMAR GLOBAL CS CO., LTD. All RightsReserved.

Fig.12. GOVERNOR

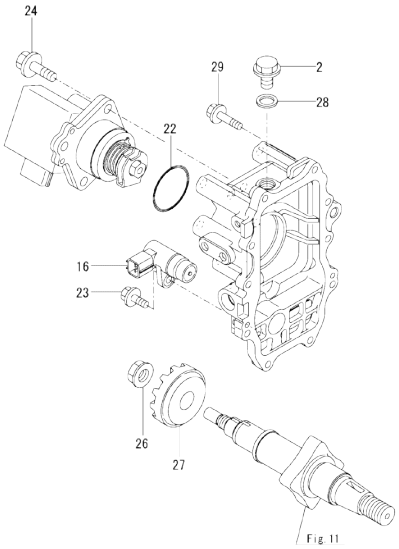

Remarks
* This figure(Governor) is incorporated in the Fuel Injection Pump(Fig.11).

(A)=4TNV94L-ZCPYBC (D)=
(B)= (E)=
(C)= (F)=

No.	Lev.	Parts No.	Description	Q'ty (A)	(B)	(C)	(D)	(E)	(F)	I	R
2	2	158553-51930	PLUG, M12	1							
16	2	158557-61720	SENSOR, ROTATION	1							
22	2	24341-000480	O-RING, 1AS48.0	1							
23	2	26106-060162	BOLT, M6X 16 PLATED	1							
24	2	26106-080252	BOLT, M8X 25 PLATED	3							
26	2	129008-61301	NUT, SUPPORT	1							
27	2	158553-61780	GEAR, SENSOR	1							
28	2	22190-120002	WASHER, SEAL 12	1							
29	2	26106-060252	BOLT, M6X 25 PLATED	10							

N:Old ◄Yes/No► New, Q:Old ◄No/Yes► New, R:Old ◄Yes/Yes► New, S:Old ◄No/No► New, W:Add, Z:Discontinued, F:Interchangeable by set, K:Q'ty Change

Copyright (C) 2019 YANMAR GLOBAL CS CO., LTD. All RightsReserved.

Fig.13. FUEL INJECTION VALVE

(A)=4TNV94L-ZCPYBC
(B)=
(C)=
(D)=
(E)=
(F)=

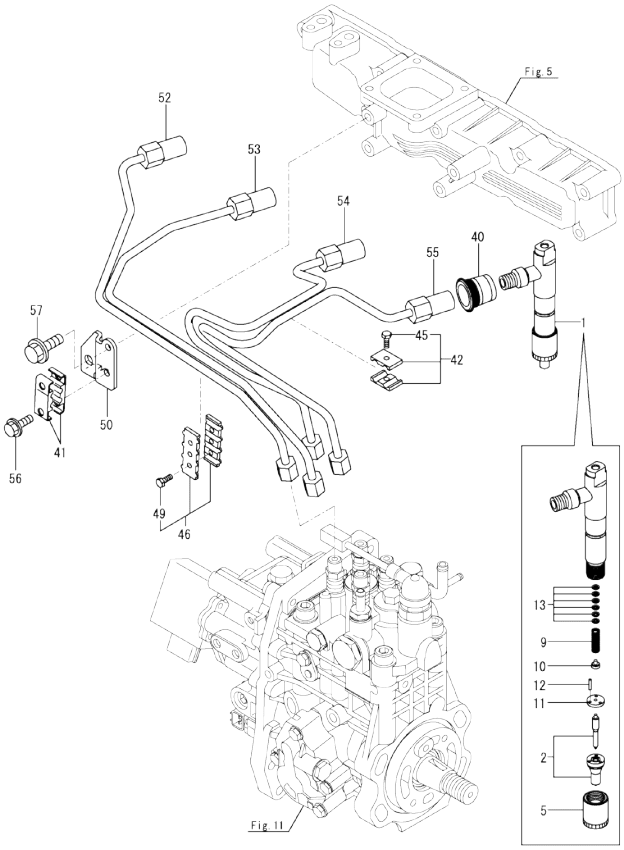

No.	Lev.	Parts No.	Description	Q'ty (A)	(B)	(C)	(D)	(E)	(F)	I	R
1	1	729907-53100	VALVE ASSY,INJECTION	4							
2	2	129907-53000	VALVE ASSY,INJECTION	4							
5	2	114250-53080	NUT, NOZZLE	4							
9	2	114250-53120	SPRING, NOZZLE	4							
10	2	114250-53130	SEAT, SPRING	4							
11	2	114250-53140	SPACER, VALVE STOP	4							
12	2	114250-53210	PIN, POSITIONING	8							
13	2	119803-53400	SHIM SET	4							1
40	1	123907-11601	SEAL, PIPE	4							
41	1	122780-59100	RETAINER, PIPE	2							
42	1	119305-59120	RETAINER, PIPE	1							
45	2	129150-59131	BOLT, M4X14	1							
46	1	129550-59120	RETAINER, PIPE	1							
49	2	129150-59131	BOLT, M4X14	2							
50	1	129907-59710	SUPPORT, PIPE CLAMP	1							
52	1	129907-59810	PIPE ASSY, INJECTION	1							
53	1	129907-59820	PIPE ASSY, INJECTION	1							
54	1	129907-59830	PIPE ASSY, INJECTION	1							
55	1	129907-59840	PIPE ASSY, INJECTION	1							
56	1	26106-060162	BOLT, M6X 16 PLATED	2							
57	1	26106-080182	BOLT, M8X 18 PLATED	1							

Remarks
(1)Spare parts.

N:Old ←Yes/No→ New. Q:Old ←No/Yes→ New. R:Old ←Yes/Yes→ New. S:Old ←No/No→ New. W:Add. Z:Discontinued. F:Interchangeable by set. K:Q'ty Change

Copyright (C) 2019 YANMAR GLOBAL CS CO., LTD. All RightsReserved.

Fig.14. FUEL PIPE

(A)=4TNV94L-ZCPYBC
(B)=
(C)=
(D)=
(E)=
(F)=

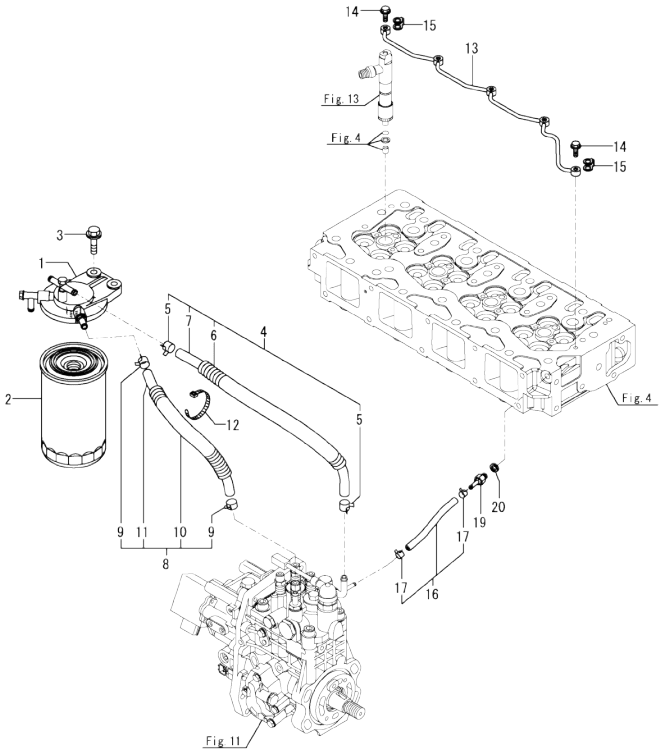

No.	Lev.	Parts No.	Description	Q'ty (A)	(B)	(C)	(D)	(E)	(F)	I	R
1	1	129004-55612	BRACKET, FILTER	1							
2	1	129907-55801	FILTER, FUEL	1							
3	1	26106-080302	BOLT, M8X 30 PLATED	2							
4	1	129457-59010	HOSE ASSY, FUEL	1							
5	2	124766-59050	CLAMP, HOSE 11.5	2							
6	2	129957-59120	TUBE, CORRUGATED 15	1							
7	2	105025-59750	HOSE, FUEL	1							
8	1	129981-59010	HOSE ASSY, FUEL	1							
9	2	124766-59050	CLAMP, HOSE 11.5	2							
10	2	129950-59221	TUBE, CORRUGATED 15	1							
11	2	129980-59510	HOSE, FUEL	1							
12	1	121750-59890	BAND, NYLON	1							
13	1	129907-59140	PIPE ASSY, RETURN	1							
14	1	123907-59540	BOLT, PIPE JOINT M6	5							
15	1	123907-59550	GASKET, FUEL RETURN	5							
16	1	129486-59551	HOSE ASSY, RETURN	1							
17	2	124722-59050	CLAMP, HOSE 9	2							
19	1	123907-59560	JOINT, HOSE	1							
20	1	22190-080002	WASHER, SEAL 8	1							

N:Old ←Yes/No→ New. Q:Old ←No/Yes→ New. R:Old ←Yes/Yes→ New. S:Old ←No/No→ New. W:Add. Z:Discontinued. F:Interchangeable by set. K:Q'ty Change

Copyright (C) 2019 YANMAR GLOBAL CS CO., LTD. All RightsReserved.

Fig.15. STARTER MOTOR

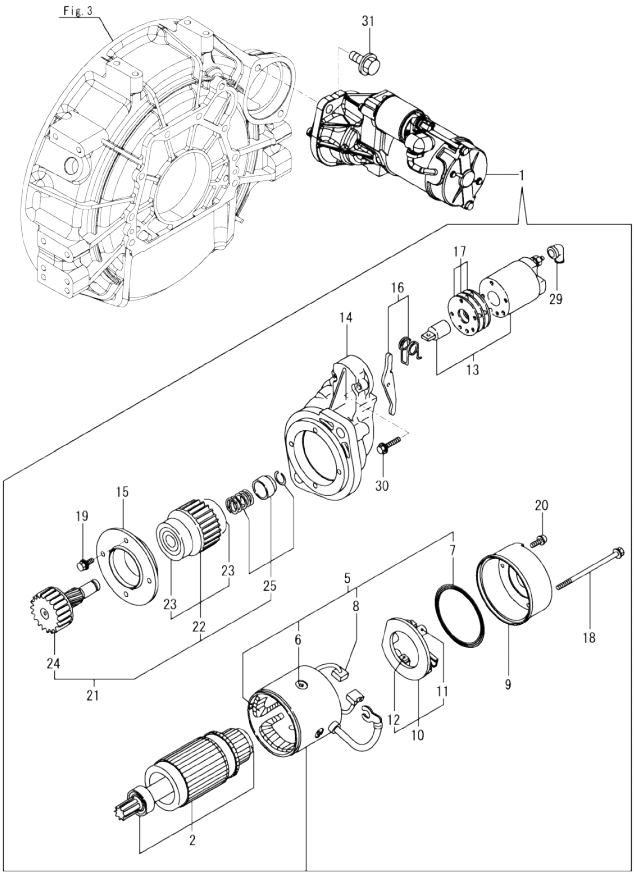

(A)=4TNV94L-ZCPYBC (D)=
(B)= (E)=
(C)= (F)=

No.	Lev.	Parts No.	Description	Q'ty (A)	(B)	(C)	(D)	(E)	(F)	I	R
1	1	129940-77011	STARTER, 12V.3KW	1							
2	2	129940-77100	ARMATURE ASSY	1							
5	2	129940-77130	COIL ASSY, FIELD	1							
6	3	129940-77140	SCREW, CORE SET	4							
7	3	129940-77150	O-RING	1							
8	3	129940-77160	BRUSH, +	2							
9	2	129940-77171	COVER, REAR	1							
10	2	129940-77181	HOLDER ASSY, BRUSH	1							
11	3	129940-77190	SPRING, BRUSH	1							
12	3	129940-77200	BRUSH, -	2							
13	2	129940-77210	SWITCH ASSY, MAGNET	1							
14	2	129940-77221	CASE, GEAR	1							
15	2	129940-77230	RETAINER, BEARING	1							
16	2	129940-77240	LEVER SET, SHIFT	1							
17	2	129940-77250	COVER KIT, DUST	1							
18	2	129940-77260	BOLT, THROUGH	2							
19	2	129940-77270	BOLT, M6X20	4							
20	2	129940-77280	SCREW, M4	2							
21	2	123900-77510	CLUTCH ASSY, PINION	1							
22	3	123900-77520	CLUTCH ASSY	1							
23	4	X2240610100	BEARING, BALL	1							
24	3	123900-77540	SHAFT, PINION	1							
25	3	119131-77550	STOPPER SET, PINION	1							
29	2	121254-77810	COVER, TERMINAL M	1							
30	2	114371-79070	BOLT, M6	2							
31	1	26106-120252	BOLT, M12X 25 PLATED	2							

N:Old ←Yes/No→ New. Q:Old ←No/Yes→ New. R:Old ←Yes/Yes→ New. S:Old ←No/No→ New. W:Add. Z:Discontinued. F:Interchangeable by set. K:Q'ty Change

Copyright (C) 2019 YANMAR GLOBAL CS CO., LTD. All RightsReserved.

Fig.16. GENERATOR

(A)=4TNV94L-ZCPYBC (D)=
(B)= (E)=
(C)= (F)=

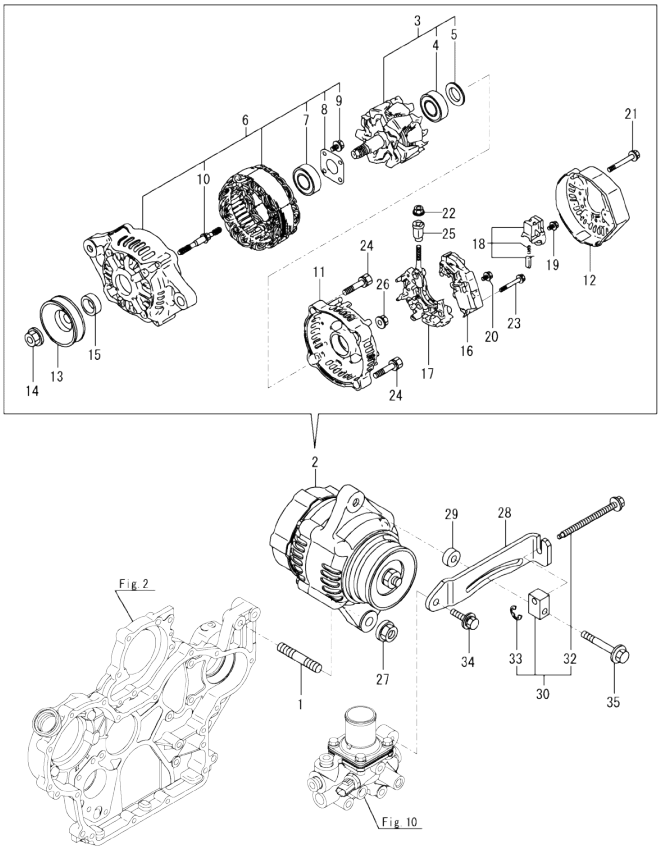

No.	Lev.	Parts No.	Description	Q'ty (A)	(B)	(C)	(D)	(E)	(F)	I	R
1	1	129795-01900	BOLT, M10X30	1							
2	1	119626-77220	ALTERNATOR, 12V-55A	1							
3	2	129052-77380	ROTOR ASSY	1							
4	3	123501-79240	BEARING, BALL	1							
5	3	119620-79250	COVER, BEARING	1							
6	2	129052-77422	FRAME ASSY	1							
7	3	119620-79200	BEARING, BALL	1							
8	3	119620-79210	PLATE, RETAINER	1							
9	3	119620-79220	SCREW	4							
10	3	119620-79230	STUD	2							
11	2	128401-77440	COVER, END	1							
12	2	119626-77450	COVER, END	1							
13	2	119620-77461	PULLEY, GENERATOR	1							
14	2	119620-77471	NUT	1							
15	2	119620-77490	COLLAR	1							
16	2	129423-77730	REGULATOR ASSY	1							
17	2	129052-79260	HOLDER ASSY	1							
18	2	129052-79270	HOLDER ASSY, BRUSH	1							
19	2	119620-79290	SCREW	6							
20	2	119620-79300	SCREW	1							
21	2	119620-79310	BOLT	3							
22	2	129240-79310	NUT	1							
23	2	119620-79320	SCREW, W/WASHER	2							
24	2	119620-79330	BOLT	2							
25	2	119620-79340	BUSH, INSULATION	1							
26	2	119620-79350	NUT	2							
27	1	26306-100002	NUT, M10	1							
28	1	129938-77300	ADJUSTER, BELT	1							
29	1	121236-77340	SPACER, ADJUSTER	1							
30	1	129630-77350	BLOCK ASSY, ADJUSTER	1							
32	2	129630-77380	BOLT, M8X100	1							
33	2	22272-000050	RING, E- 5	1							
34	1	26014-080252	BOLT, M8X 25	1							
35	1	26106-080552	BOLT, M8X 55 PLATED	1							

N:Old ←Yes/No→ New. Q:Old ←No/Yes→ New. R:Old ←Yes/Yes→ New. S:Old ←No/No→ New. W:Add. Z:Discontinued. F:Interchangeable by set. K:Q'ty Change

Copyright (C) 2019 YANMAR GLOBAL CS CO., LTD. All RightsReserved.

Fig.17. ELECTRONIC CONTROL UNIT(ECU)

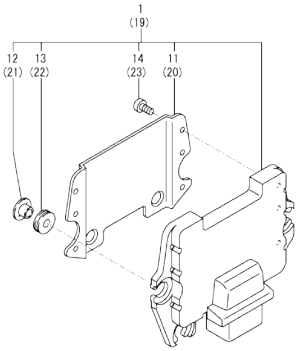

(A)=4TNV94L-ZCPYBC (D)=
(B)= (E)=
(C)= (F)=

No.	Lev.	Parts No.	Description	Q'ty (A)	(B)	(C)	(D)	(E)	(F)	I	R
1	1	129984-75120	ECU ASSY,94L-ZCPYBC	1							1
11	2	129927-77600	SHIELD, ECU	1							
12	2	129927-77680	COLLAR, CONTROLLER	3							
13	2	119578-91351	RUBBER, CONTROLLER	3							
14	2	22877-500080	SCREW, 5X 8	6							
19	1	129927-75901	ECU ASSY, SERVICE	1							2
20	2	129927-77600	SHIELD, ECU	1							
21	2	129927-77680	COLLAR, CONTROLLER	3							
22	2	119578-91351	RUBBER, CONTROLLER	3							
23	2	22877-500080	SCREW, 5X 8	6							

Remarks
(1)Eco ECU
This part cannot be ordered.
Replace the part using a Service ECU with the proper engine information installed.
(2)Service ECU
When replacing this part, it is necessary to update the software of the ECU using the designated service tool.
Please refer to the Service Manual for details.

N:Old ←Yes/No→ New. Q:Old ←No/Yes→ New. R:Old ←Yes/Yes→ New. S:Old ←No/No→ New. W:Add. Z:Discontinued. F:Interchangeable by set. K:Q'ty Change

Copyright (C) 2019 YANMAR GLOBAL CS CO., LTD. All RightsReserved.

Fig.18. ACCESSORY

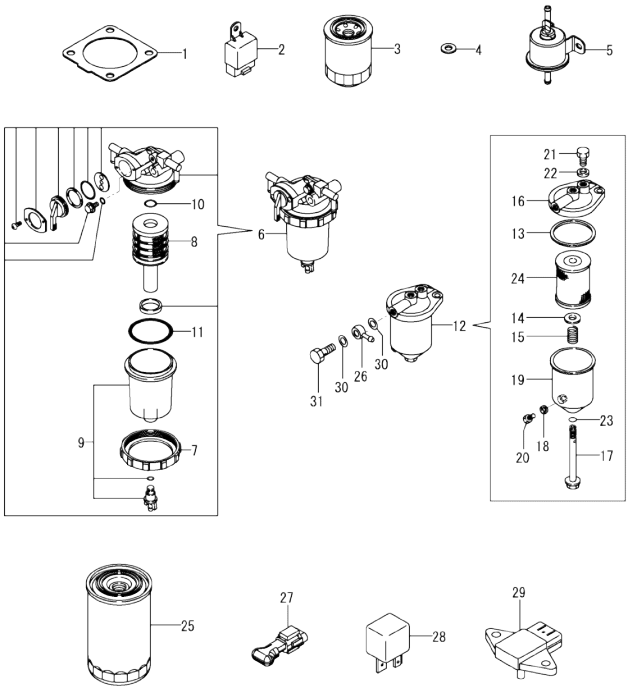

(A)=4TNV94L-ZCPYBC (D)=
(B)= (E)=
(C)= (F)=

No.	Lev.	Parts No.	Description	Q'ty (A)	(B)	(C)	(D)	(E)	(F)	I	R
1	1	129930-13201	GASKET, SILENCER	1							
2	1	172B02-17150	RELAY, CA TYPE C	2							
3	1	119005-35151	FILTER, OIL D80X100	1							
4	1	129150-49360	GASKET, 10	1							
5	1	129612-52100	PUMP, FUEL FEED	1							
6	1	129906-55711	SEPARATOR ASSY,WATER	1							
7	2	129100-55690	NUT, RETAINING	1							
8	2	119802-55710	ELEMENT, FUEL	1							
9	2	119802-55730	CUP ASSY, SEPARATOR	1							
10	2	24311-000160	O-RING, 1AP16.0	1							
11	2	24321-000650	O-RING, 1AG65.0	1							
12	1	129065-55750	SEPARATOR ASSY,WATER	1							
13	2	123325-35140	GASKET, COVER	1							
14	2	123325-35160	SEAT, SPRING	1							
15	2	129065-55170	SPRING, FILTER	1							
16	2	129495-55610	BODY, STRAINER	1							
17	2	129495-55620	BOLT, CENTER	1							
18	2	123672-55760	GASKET	1							
19	2	129065-55760	CASE, SEPARATOR	1							
20	2	129065-55770	PLUG, DRAIN M8	1							
21	2	129065-55800	PLUG, M14	1							
22	2	123678-55890	GASKET, PLUG	1							
23	2	24311-000120	O-RING, 1AP12.0	1							
24	2	41650-550800	ELEMENT, FUEL	1							
25	1	129907-55801	FILTER, FUEL	1							
26	1	121750-59910	JOINT, BALL 14	2							
27	1	129C00-77300	RESISTOR, MOLDED	1							
28	1	129927-77920	RELAY, ISO 70A	2							
29	1	129927-91200	SENSOR, PRESSURE	1							
30	1	22190-140002	WASHER, SEAL 14	4							
31	1	23857-080000	BOLT, JOINT 8	2							

N:Old ←Yes/No→ New. Q:Old ←No/Yes→ New, R:Old ←Yes/Yes→ New. S:Old ←No/No→ New. W:Add. Z:Discontinued. F:Interchangeable by set. K:Q'ty Change

Copyright (C) 2019 YANMAR GLOBAL CS CO., LTD. All RightsReserved.

Fig.19. GASKET SET

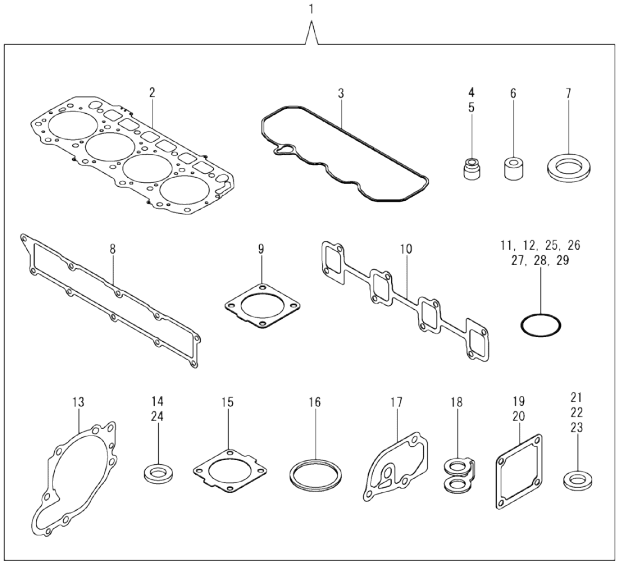

(A)=4TNV94L-ZCPYBC
(B)=
(C)=
(D)=
(E)=
(F)=

No.	Lev.	Parts No.	Description	Q'ty (A)	(B)	(C)	(D)	(E)	(F)	I	R
1	1	129932-92760	GASKET SET	1							1
2	2	129906-01350	GASKET, HEAD	1							
3	2	129933-11310	GASKET, BONNET	1							
4	2	119803-11340	SEAL, VALVE STEM	8							
5	2	124160-11340	SEAL, VALVE STEM	8							
6	2	119802-11870	PROTECTOR, NOZZLE	4							
7	2	119625-11880	SEAT, NOZZLE	4							
8	2	129907-12110	GASKET, MANIFOLD	1							
9	2	129930-13201	GASKET, SILENCER	1							
10	2	129900-13251	GASKET, MANIFOLD	1							
11	2	129900-32030	O-RING, P20	2							
12	2	129900-32040	O-RING, P14	1							
13	2	129900-42020	GASKET, WATER PUMP	1							
14	2	124465-44950	GASKET, 16	2							
15	2	121850-49540	GASKET, THERMOSTAT	1							
16	2	121850-49550	GASKET, THERMOSTAT	1							
17	2	129900-49870	GASKET, THERMOSTAT	1							
18	2	123907-59550	GASKET, FUEL RETURN	5							
19	2	119129-77020	GASKET, AIR HEATER	2							
20	2	121850-77021	GASKET, AIR HEATER	1							
21	2	22190-080002	WASHER, SEAL 8	7							
22	2	22190-120002	WASHER, SEAL 12	1							
23	2	22190-220002	WASHER, SEAL 22	1							
24	2	23414-080000	GASKET, 8X1.0	1							
25	2	24311-000070	O-RING, 1AP7.0	1							
26	2	24311-000120	O-RING, 1AP12.0	8							
27	2	24311-000320	O-RING, 1AP32.0	3							
28	2	24341-000530	O-RING, 1AS53.0	1							
29	2	24351-030750	O-RING, 1A3075	1							

Remarks
(1)Optional parts.

N:Old ←Yes/No→ New. Q:Old ←No/Yes→ New. R:Old ←Yes/Yes→ New. S:Old ←No/No→ New. W:Add. Z:Discontinued. F:Interchangeable by set. K:Q'ty Change

Copyright (C) 2019 YANMAR GLOBAL CS CO., LTD. All RightsReserved.

Parts No. Index

Parts No.	Fig. No.	Ref. No.
105025-59750	14	7
114250-39450	9	12
114250-53080	13	5
114250-53120	13	9
114250-53130	13	10
114250-53140	13	11
114250-53210	13	12
114371-79070	15	30
119000-01840	3	3
119000-35140	9	3
119005-35151	9	24
	18	3
119129-77020	19	19
119131-18320	6	5
119131-77550	15	25
119305-59120	13	42
119578-91351	17	13
		22
119593-11301	4	30
119620-11180	4	15
119620-77461	16	13
119620-77471	16	14
119620-77490	16	15
119620-79200	16	7
119620-79210	16	8
119620-79220	16	9
119620-79230	16	10
119620-79250	16	5
119620-79290	16	19
119620-79300	16	20
119620-79310	16	21
119620-79320	16	23
119620-79330	16	24
119620-79340	16	25
119620-79350	16	26
119625-11880	4	26
	19	7
119626-77220	16	2
119626-77450	16	12
119640-01640	3	7
119640-61400	4	62
119802-11870	4	25
	19	6
119802-51680	11	75
119802-51690	11	76
119802-55710	18	8
119802-55730	18	9
119803-11340	4	16
	19	4
119803-53400	13	13

Parts No.	Fig. No.	Ref. No.
119852-51630	11	80
119852-51640	11	81
119852-51650	11	83
119934-59910	11	133
120130-22301	8	23
121236-77340	16	29
121254-77810	15	29
121450-42450	10	33
121520-34810	9	1
121750-59890	14	12
121750-59910	18	26
121850-21130	8	11
121850-21290	8	4
121850-21920	8	5
121850-49540	10	21
	19	15
121850-49550	10	22
	19	16
121850-49811	10	23
121850-77021	5	5
	19	20
122780-59100	13	41
123325-35140	18	13
123325-35160	18	14
123501-79240	16	4
123672-55760	18	18
123678-55890	18	22
123900-13610	6	3
123900-25060	7	9
123900-77510	15	21
123900-77520	15	22
123900-77540	15	24
123907-03100	4	55
123907-03110	4	56
123907-03120	4	57
123907-03140	4	58
123907-11280	4	35
123907-11550	4	3
123907-11601	13	40
123907-11820	4	22
123907-11830	4	21
123907-39500	9	15
123907-59540	14	14
123907-59550	14	15
	19	18
123907-59560	14	19
124160-01751	2	34
	4	50
124160-11340	4	17
	19	5

Parts No.	Fig. No.	Ref. No.
124160-11360	4	65
124240-01871	2	36
124465-44950	10	34
	19	14
124722-59050	14	17
124766-59050	14	5
		9
127410-21480	8	14
128401-77440	16	11
129004-55612	14	1
129005-59830	9	17
129008-51920	11	20
129008-61301	12	26
129052-77380	16	3
129052-77422	16	6
129052-79260	16	17
129052-79270	16	18
129065-55170	18	15
129065-55750	18	12
129065-55760	18	19
129065-55770	18	20
129065-55800	18	21
129100-01580	2	4
	3	1
129100-55690	18	7
129150-02450	7	4
129150-11230	4	38
		42
129150-11750	4	20
		39
		43
129150-14200	7	1
129150-49360	18	4
129150-59131	13	45
		49
129240-79310	16	22
129263-77941	11	6
129423-77730	16	16
129457-59010	14	4
129486-59551	14	16
129495-55610	18	16
129495-55620	18	17
129509-51390	11	33
129550-59120	13	46
129612-52100	18	5
129630-77350	16	30
129630-77380	16	32
129631-44740	10	15
129657-51590	11	70
129657-51600	11	71

Parts No.	Fig. No.	Ref. No.
129795-01900	16	1
129900-01200	1	23
129900-01250	1	4
129900-01850	2	41
129900-01870	2	42
129900-02020	1	6
129900-02410	1	9
129900-07900	4	1
129900-13200	6	1
129900-13251	6	2
	19	10
129900-14100	7	6
129900-21200	8	3
129900-23001	8	25
129900-23200	8	28
129900-23911	8	31
129900-32001	2	8
129900-32030	2	20
	9	5
	19	11
129900-32040	2	21
	19	12
129900-42004	10	1
129900-42020	10	10
	19	13
129900-42450	10	13
129900-44760	10	16
129900-49870	10	28
	19	17
129902-21000	8	1
129906-01350	1	24
	19	2
129906-34851	9	2
129906-51580	11	68
129906-55711	18	6
129907-01500	2	7
129907-03011	4	52
129907-03061	4	53
129907-03070	4	54
129907-11100	4	12
129907-11110	4	13
129907-11120	4	14
129907-11250	4	32
129907-11260	4	33
129907-11270	4	34
129907-11321	4	51
129907-11341	4	31
129907-11510	4	18
129907-11650	4	36
129907-11660	4	40

Parts No. Index

Parts No.	Fig. No.	Ref. No.
129907-11700	4	4
129907-11800	4	68
129907-11920	4	44
129907-11950	4	27
129907-11960	4	28
129907-12100	5	1
129907-12110	5	2
	19	8
129907-14400	7	2
129907-21650	8	8
129907-25900	7	15
129907-51560	11	65
129907-53000	13	2
129907-55801	14	2
	18	25
129907-59140	14	13
129907-59710	13	50
129907-59810	13	52
129907-59820	13	53
129907-59830	13	54
129907-59840	13	55
129915-01610	3	2
129915-77051	5	6
129916-01710	3	6
129916-01790	3	5
129916-01800	2	3
129916-21610	8	7
129916-49530	10	20
129927-02340	1	29
129927-02930	1	20
129927-02940	1	35
129927-23600	8	29
129927-23610	8	32
129927-25100	7	10
129927-25920	7	16
129927-39060	9	13
129927-42140	2	22
129927-44900	10	19
129927-49820	10	18
129927-51250	11	140
129927-51650	11	4
129927-51660	11	5
129927-51670	11	8
129927-75901	17	19
129927-77600	17	11
		20
129927-77680	17	12
		21
129927-77920	18	28
129927-91200	18	29

Parts No.	Fig. No.	Ref. No.
129928-51900	11	19
129930-13201	18	1
	19	9
129932-14580	7	3
129932-21580	8	12
129932-92760	19	1
129933-11310	4	61
	19	3
129938-77300	16	28
129940-77011	15	1
129940-77100	15	2
129940-77130	15	5
129940-77140	15	6
129940-77150	15	7
129940-77160	15	8
129940-77171	15	9
129940-77181	15	10
129940-77190	15	11
129940-77200	15	12
129940-77210	15	13
129940-77221	15	14
129940-77230	15	15
129940-77240	15	16
129940-77250	15	17
129940-77260	15	18
129940-77270	15	19
129940-77280	15	20
129950-59221	14	10
129951-01740	2	5
129953-25300	7	14
129953-35000	9	6
129957-59120	14	6
129960-21930	8	9
129960-21940	8	10
129980-59510	14	11
129981-59010	14	8
129984-22050	8	17
129984-22100	8	15
129984-75120	17	1
129C00-77300	18	27
129C26-01890	2	37
129E00-13640	6	4
144626-51090	11	21
158552-51571	11	66
158552-51580	11	69
158552-51670	11	9
158552-51781	11	108
158552-52100	11	131
158552-52311	11	117
158552-52400	11	118

Parts No.	Fig. No.	Ref. No.
158552-52500	11	132
158553-51670	11	74
158553-51680	11	86
158553-51930	11	111
	12	2
158553-61780	12	27
158557-51570	11	67
158557-61720	12	16
158563-51150	7	17
158563-51281	11	31
		32
158563-51330	11	42
158600-51270	11	30
158601-51550	11	64
158601-51650	11	7
158601-51770	11	107
158601-51790	11	109
171031-11741	2	39
171051-01921	1	5
171056-49120	10	32
172B02-17150	18	2
22190-080002	9	18
		20
		22
	14	20
	19	21
22190-120002	10	25
	11	112
		119
		135
	12	28
	19	22
22190-140002	18	30
22190-180002	11	113
22190-220002	3	9
	19	23
22217-050000	11	136
22217-180000	11	120
22252-000300	8	24
22272-000050	16	33
22312-050140	11	121
22351-050010	11	122
22351-060012	1	25
22512-070140	7	7
	8	6
22857-500100	4	63
		64
22877-500080	17	14
		23
23414-080000	10	29

Parts No.	Fig. No.	Ref. No.
23414-080000	19	24
23857-030000	9	19
23857-080000	18	31
23875-030000	10	26
23876-020000	4	9
23876-030000	1	26
		27
		28
	4	10
24311-000070	2	23
	11	123
	19	25
24311-000120	4	29
		66
	18	23
	19	26
24311-000160	18	10
24311-000320	2	35
		40
	4	67
	19	27
24321-000650	18	11
24341-000480	12	22
24341-000530	19	28
24351-030750	2	24
	19	29
24356-190200	11	77
		124
24356-240210	11	125
24372-000150	11	78
25152-004200	10	14
26014-080252	16	34
26106-060102	11	126
26106-060122	11	137
26106-060162	12	23
	13	56
26106-060202	10	27
26106-060252	12	29
26106-060302	10	11
26106-060352	11	127
26106-080122	3	10
	9	11
		21
		23
	10	30
26106-080142	7	8
26106-080162	2	25
		38
		43
	4	2

Parts No. Index

Parts No.	Fig. No.	Ref. No.
26106-080182	13	57
26106-080202	2	26
		27
	11	141
26106-080252	12	24
26106-080302	11	142
	14	3
26106-080352	5	7
26106-080402	2	28
	4	46
26106-080452	2	29
		30
26106-080552	5	3
	7	13
	10	12
	16	35
26106-080602	4	47
		48
	10	31
26106-080702	2	31
26106-080752	2	32
26106-080852	5	4
	10	17
26106-120252	15	31
26206-100352	3	4
26216-100302	2	19
26226-080222	4	45
26306-080002	4	49
	6	6
26306-100002	2	33
	16	27
26450-100452	11	128
26716-050002	11	138
26776-180002	11	129
27241-160000	11	139
27241-300000	1	10
27241-400000	4	11
27310-070001	4	23
41650-550800	18	24
729906-01560	1	1
729907-01559	2	1
729907-53100	13	1
729927-02800	1	32
729984-51340	11	1
X2240610100	15	23

Parts No.	Fig. No.	Ref. No.

Parts No.	Fig. No.	Ref. No.

Parts No.	Fig. No.	Ref. No.