YANMAR

# PARTS CATALOG

0CW10-M75800EN

Last update Mar., 2013

# PREFACE

1. This parts catalog is the 1st edition of 4TNV94L-ZXSDB for DOOSAN INFRACORE.

Pub.No. : 0CW10-G75800
Published : September, 2012

2. Model name

| Engine model | Vehicle | Vehicle made by |
|---|---|---|
| 4TNV94L-ZXSDB | EXCAVATOR | DOOSAN INFRACORE |

## Directions for the Parts Catalog.

**1.This Parts Catalog shows both standard and optional parts.**
**2.Parts may change without prior notice.**
**3.The following is an example of the Parts Catalog format.**

0CF10-G21601 29. FUEL INJECTION PUMP(W/BOOST)

(A)=4JH-DT
(B)=4JH-DTZ
(C)=4JH-DTZP
(D)=4JH-DTZA
(E)=4JH-DTZY
(F)=

| ① REF. | ② LEV. | PARTS NO. | DESCRIPTION | Q'TY (A) | (B) | (C) | (D) | (E) | (F) | ③ I | ⑤ R |
|---|---|---|---|---|---|---|---|---|---|---|---|
| 1 | 1 | 729595-51390 | FUEL INJECTION PUMP | 1 | 1 | 1 | 1 | 1 | | | 1 |
| 1-1 | 1 | 729595-51391 | FUEL INJECTION PUMP | 1 | 1 | 1 | 1 | 1 | | N | 1 |
| | (A=E00185) | (B=E00200) | | | | | | | | | |
| 3 | 2 | 26022-060162 | SCREW M 6X 16 | 9 | 9 | 9 | 9 | 9 | | | |
| 3-1 ④ | 2 | 26022-060162 | SCREW M 6X 16 | 4 | 4 | 4 | 4 | 4 | | K | |
| | (A=E00156) | (B=E00156) | (C=E00156) (D=E00156) | (E=E00156) | | | | | | | |
| 4 | 2 | 129470-51040 | CAMSHAFT | 1 | 1 | 1 | 1 | 1 | | | |
| 5 | 2 | 122710-51050 | BEARING, ROLLER | 2 | 2 | 2 | 2 | 2 | | | |
| 6 | 2 | 129470-51060 | RETAINER | 1 | 1 | 1 | 1 | 1 | | | |

Remarks
(1) BOOST COMPEMSATOR TYPE. OPTIONAL PART, TO E00155,(4JH-DT, 4JH-DTZ

### ①Ref. No.

The Ref. No. listed may not be in accordance with the illustration Ref. No.

(Ex.) Illustration No. 1 List Ref No. 1 (Before change) → 1- 1 (After change)

For interchangeable symbols N, R and K, illustrations for new parts may be abbreviated.

### ②Lev. (Level)

Level indication
The numbers below indicate the level of relativity towards the main part.
1 ----- Main parts (Assembly parts)
2 ----- Sub component included in " 1 ".
3 ----- Sub component included in " 2 ".
Note) Parts that are not for sale are partially illustrated but not listed.

### ③Interchangeability Symbol

When a part change takes place, one of the following interchangeability symbols is indicated beside the part.

| Symbol | Interchangeability | Contents note |
|---|---|---|
| N | Old ← Yes / No → New | New Part is interchangeable for Old Part but Old Part is not interchangeable for New Part. |
| Q | Old ← No / Yes → New | New Part is not interchangeable for Old Part but Old Part is interchangeable for New Part. |
| R | Old ← Yes / Yes → New | New/ Old Parts are both interchangeable. |
| S | Old ← No / No → New | New/ Old Parts are both not interchangeable. |
| W | | Part newly added. |
| Z | | Part discontinued. |
| F | | Not interchangeable by a single part but interchangeable together with related parts. |
| K | | Changes only for used parts quantities. |

### ④Effective Machine No.

When a part changes, the effective Machine No. will be indicated in the (A)-(F) column.

| Product Symbol | Product No. | Product Symbol | Product No. |
|---|---|---|---|
| C | Clutch No. Compressor No. | F | Machine No. (Agricultural Equip.) |
| D | Drive No. | M | Machine No. |
| E | Engine No. | | |

Note 1) A date may follow the symbol. (Ex.) 1996.01
Note 2) " XXXXX " and " ZZZZZ " are for parts that could not be predicted or for engine models that could not be identified.
Note 3) (A=E00185) is the E (Engine Serial Number) for the column (A) model (in this case 4JH-DT) after the parts design change.

### ⑤Remarks

Figures or alphabets (symbols) are entered in the remarks column.
The comments (remarks) on parts that are indicated at the bottom of the illustration are the same symbols as those stated above.

# Contents

0CW10-M75800

| Fig. No. | Fig. Name | Fig. No. | Fig. Name |
|---|---|---|---|

4TNV94L-ZXSDB


1. CYLINDER BLOCK
2. GEAR HOUSING
3. FLYWHEEL HOUSING & OIL SUMP
4. CYLINDER HEAD & BONNET
5. SUCTION MANIFOLD
6. EXHAUST MANIFOLD & SILENCER
7. CAMSHAFT & DRIVING GEAR
8. CRANKSHAFT & PISTON
9. LUB. OIL SYSTEM
10. COOLING WATER SYSTEM
11. FUEL INJECTION PUMP
12. GOVERNOR
13. FUEL INJECTION VALVE
14. FUEL LINE
15. STARTING MOTOR
16. GENERATOR
17. ELECTRONIC CONTROL UNIT (ECU)
18. GASKET SET

# Fig.1. CYLINDER BLOCK

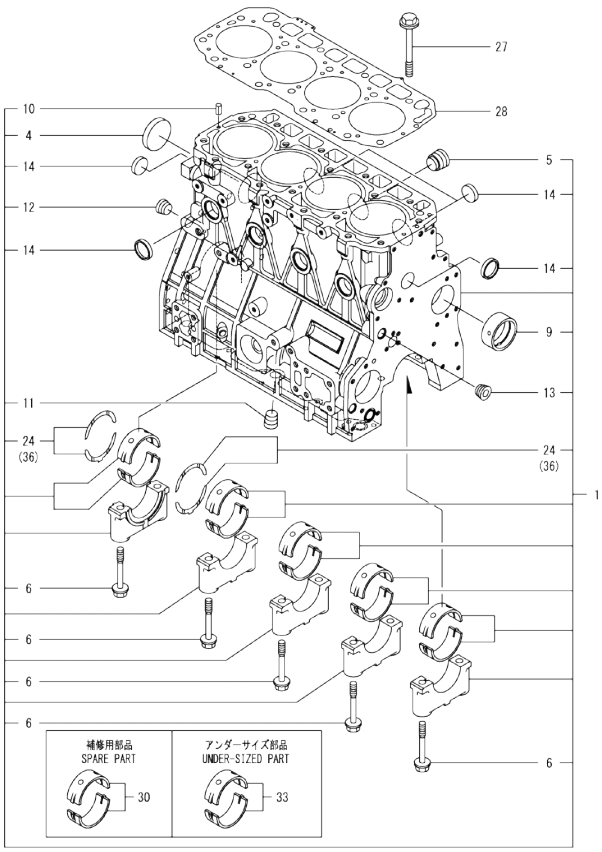


Remarks
(1)Spare part.
(2)Under-sized(U.S.=0.25)part.
(3)Over-sized(O.S.=0.25)part.



(A)=4TNV94L-ZXSDB (D)=
(B)= (E)=
(C)= (F)=

| No. | Lev. | Parts No. | Description | Q'ty (A) | (B) | (C) | (D) | (E) | (F) | I | R |
|---|---|---|---|---|---|---|---|---|---|---|---|
| 1 | 1 | 729906-01561 | BLOCK ASSY, CYLINDER | 1 | | | | | | | |
| 4 | 2 | 129900-01250 | PLUG, DISH TYPE 55 | 1 | | | | | | | |
| 5 | 2 | 171051-01921 | PLUG, NPTF1 | 1 | | | | | | | |
| 6 | 2 | 129900-02020 | BOLT, METAL CAP | 10 | | | | | | | |
| 9 | 2 | 129900-02410 | BUSH, CAMSHAFT | 1 | | | | | | | |
| 10 | 2 | 22351-060012 | PIN, SPRING 6.0X12 | 2 | | | | | | | |
| 11 | 2 | 23876-030000 | PLUG, R03 | 1 | | | | | | | |
| 12 | 2 | 23876-030000 | PLUG, R03 | 1 | | | | | | | |
| 13 | 2 | 23876-030000 | PLUG, R03 | 1 | | | | | | | |
| 14 | 2 | 27241-300000 | PLUG 30 | 8 | | | | | | | |
| 24 | 2 | 129900-02931 | BEARING ASSY, THRUST | 2 | | | | | | | |
| 27 | 1 | 129900-01200 | BOLT, CYLINDER HEAD | 18 | | | | | | | |
| 28 | 1 | 129906-01350 | GASKET, HEAD | 1 | | | | | | | |
| 30 | 1 | 729900-02801 | BEARING, MAIN | 5 | | | | | | | 1 |
| 33 | 1 | 129900-02341 | BEARING ASSY, MAIN | 5 | | | | | | | 2 |
| 36 | 1 | 129900-02941 | BEARING, THRUST 0.25 | 2 | | | | | | | 3 |

N:Old ←Yes/No→ New. Q:Old ←No/Yes→ New. R:Old ←Yes/Yes→ New. S:Old ←No/No→ New. W:Add. Z:Discontinued. F:Interchangeable by set. K:Q'ty Change

Copyright (C) YANMAR GLOBAL CS CO., LTD. All RightsReserved.

# Fig.2. GEAR HOUSING



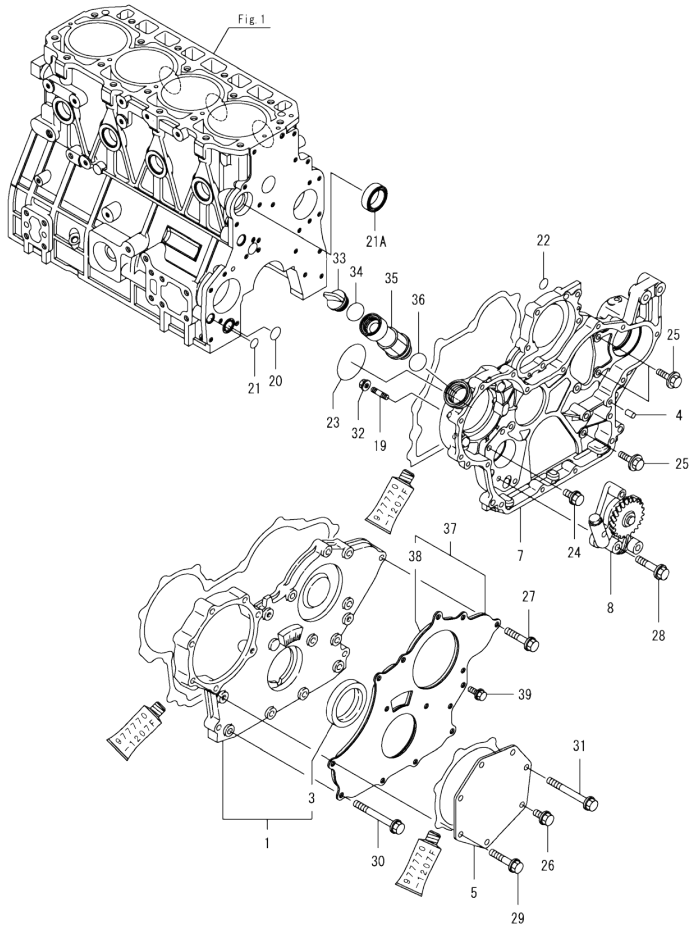


(A)=4TNV94L-ZXSDB (D)=
(B)= (E)=
(C)= (F)=

| No. | Lev. | Parts No. | Description | Q'ty (A) | (B) | (C) | (D) | (E) | (F) | I | R |
|---|---|---|---|---|---|---|---|---|---|---|---|
| 1 | 1 | 729907-01559 | COVER ASSY,GEAR CASE | 1 | | | | | | | |
| 3 | 2 | 129916-01800 | SEAL, OIL | 1 | | | | | | | |
| 4 | 1 | 129100-01580 | PIN, PARALLEL 8X16 | 4 | | | | | | | |
| 5 | 1 | 129951-01740 | COVER | 1 | | | | | | | |
| 7 | 1 | 129944-01500 | CASE, GEAR | 1 | | | | | | | |
| 8 | 1 | 129900-32001 | PUMP ASSY, OIL | 1 | | | | | | | |
| 19 | 1 | 26216-100302 | STUD, M10X 30 | 4 | | | | | | | |
| 20 | 1 | 129900-32030 | O-RING, P20 | 1 | | | | | | | |
| 21 | 1 | 129900-32040 | O-RING, P14 | 1 | | | | | | | |
| 21A | 1 | 129927-42140 | GASKET, PUMP OUTLET | 1 | | | | | | W | |
| | (A=EF9832) | | | | | | | | | | |
| 22 | 1 | 24311-000070 | O-RING, 1AP7.0 | 1 | | | | | | | |
| 23 | 1 | 24351-030750 | O-RING, 1A3075 | 1 | | | | | | | |
| 24 | 1 | 26106-080162 | BOLT, M8X 16 PLATED | 1 | | | | | | | |
| 25 | 1 | 26106-080202 | BOLT, M8X 20 PLATED | 3 | | | | | | | |
| 26 | 1 | 26106-080202 | BOLT, M8X 20 PLATED | 1 | | | | | | | |
| 27 | 1 | 26106-080402 | BOLT, M8X 40 PLATED | 5 | | | | | | | |
| 28 | 1 | 26106-080452 | BOLT, M8X 45 PLATED | 3 | | | | | | | |
| 29 | 1 | 26106-080452 | BOLT, M8X 45 PLATED | 5 | | | | | | | |
| 30 | 1 | 26106-080702 | BOLT, M8X 70 PLATED | 6 | | | | | | | |
| 31 | 1 | 26106-080752 | BOLT, M8X 75 PLATED | 1 | | | | | | | |
| 32 | 1 | 26306-100002 | NUT, M10 | 4 | | | | | | | |
| 33 | 1 | 124160-01751 | CAP, FILLER | 1 | | | | | | | |
| 34 | 1 | 24311-000320 | O-RING, 1AP32.0 | 1 | | | | | | | |
| 35 | 1 | 171031-11741 | PIPE | 1 | | | | | | | |
| 36 | 1 | 24311-000320 | O-RING, 1AP32.0 | 1 | | | | | | | |
| 37 | 1 | 129900-01850 | COVER ASSY,GEAR CASE | 1 | | | | | | | |
| 38 | 2 | 129900-01870 | SPONGE, GEAR CASE | 1 | | | | | | | |
| 39 | 1 | 26106-080162 | BOLT, M8X 16 PLATED | 3 | | | | | | | |

N:Old ←Yes/No→ New. Q:Old ←No/Yes→ New. R:Old ←Yes/Yes→ New. S:Old ←No/No→ New. W:Add. Z:Discontinued. F:Interchangeable by set. K:Q'ty Change

Copyright (C) YANMAR GLOBAL CS CO., LTD. All RightsReserved.

# Fig.3. FLYWHEEL HOUSING & OIL SUMP

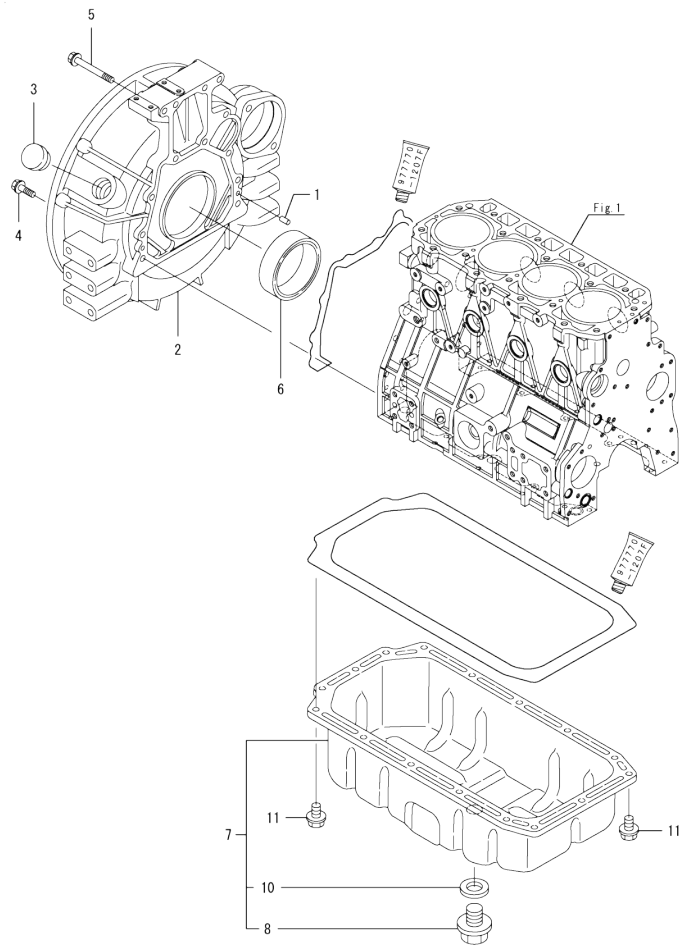




(A)=4TNV94L-ZXSDB (D)=
(B)= (E)=
(C)= (F)=

| No. | Lev. | Parts No. | Description | Q'ty (A) | (B) | (C) | (D) | (E) | (F) | I | R |
|---|---|---|---|---|---|---|---|---|---|---|---|
| 1 | 1 | 129100-01580 | PIN, PARALLEL 8X16 | 2 | | | | | | | |
| 2 | 1 | 129981-01600 | HOUSING, FLYWHEEL | 1 | | | | | | | |
| 3 | 1 | 119620-01750 | CAP | 1 | | | | | | | |
| 4 | 1 | 26206-100352 | BOLT, M10X 35 PLATED | 9 | | | | | | | |
| 5 | 1 | 26206-100702 | BOLT, M10X 70 PLATED | 4 | | | | | | | |
| 6 | 1 | 129916-01790 | SEAL, D115/95XT11 | 1 | | | | | | | |
| 7 | 1 | 129916-01710 | OIL PAN ASSY | 1 | | | | | | | |
| 8 | 2 | 119640-01640 | PLUG, DRAIN M22 | 1 | | | | | | | |
| 10 | 2 | 22190-220002 | WASHER, SEAL 22 | 1 | | | | | | | |
| 11 | 1 | 26106-080122 | BOLT, M8X 12 PLATED | 16 | | | | | | | |

N:Old ←Yes/No→ New. Q:Old ←No/Yes→ New. R:Old ←Yes/Yes→ New. S:Old ←No/No→ New. W:Add. Z:Discontinued. F:Interchangeable by set. K:Q'ty Change

Copyright (C) YANMAR GLOBAL CS CO., LTD. All RightsReserved.

# Fig.4. CYLINDER HEAD & BONNET



(A)=4TNV94L-ZXSDB (D)=
(B)= (E)=
(C)= (F)=

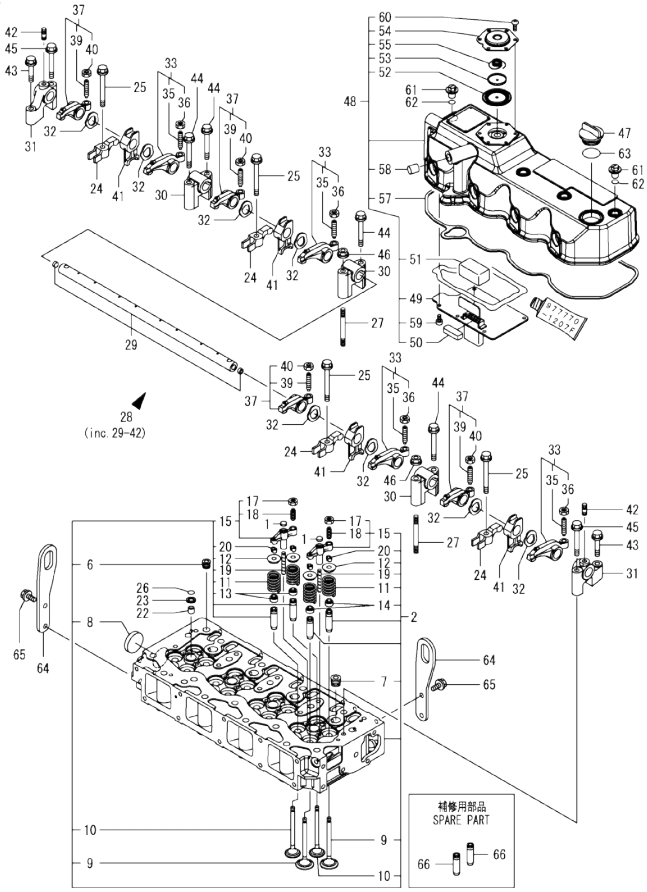


| No. | Lev. | Parts No. | Description | Q'ty (A) | (B) | (C) | (D) | (E) | (F) | I | R |
|---|---|---|---|---|---|---|---|---|---|---|---|
| 1 | 1 | 123907-11550 | SEAT, VALVE BRIDGE | 8 | | | | | | | |
| 2 | 1 | 129907-11700 | HEAD ASSY, CYLINDER | 1 | | | | | | | |
| 6 | 2 | 23876-020000 | PLUG, R02 | 1 | | | | | | | |
| 7 | 2 | 23876-030000 | PLUG, R03 | 4 | | | | | | | |
| 8 | 2 | 27241-400000 | PLUG, 40 | 1 | | | | | | | |
| 9 | 2 | 129907-11100 | VALVE, SUCTION | 8 | | | | | | | |
| 10 | 2 | 129907-11110 | VALVE, EXHAUST | 8 | | | | | | | |
| 11 | 2 | 129907-11120 | SPRING, VALVE | 16 | | | | | | | |
| 12 | 2 | 119620-11180 | RETAINER, SPRING | 16 | | | | | | | |
| 13 | 2 | 119803-11340 | SEAL, VALVE STEM | 8 | | | | | | | |
| 14 | 2 | 124160-11340 | SEAL, VALVE STEM | 8 | | | | | | | |
| 15 | 2 | 129907-11510 | BRIDGE ASSY, VALVE | 8 | | | | | | | |
| 17 | 3 | 129150-11750 | NUT, M8 | 8 | | | | | | | |
| 18 | 3 | 123907-11830 | ADJUSTER | 8 | | | | | | | |
| 19 | 2 | 123907-11820 | GUIDE, BRIDGE | 8 | | | | | | | |
| 20 | 2 | 27310-070001 | COTTER, 7 | 16 | | | | | | | |
| 22 | 1 | 119802-11870 | PROTECTOR, NOZZLE | 4 | | | | | | | |
| 23 | 1 | 119625-11880 | SEAT, NOZZLE | 4 | | | | | | | |
| 24 | 1 | 129907-11910 | RETAINER, NOZZLE | 4 | | | | | | | |
| 25 | 1 | 129907-11950 | BOLT, M8X75 | 4 | | | | | | | |
| 26 | 1 | 24311-000120 | O-RING, 1AP12.0 | 4 | | | | | | | |
| 27 | 1 | 119593-11301 | BOLT, STUD M8X80 | 2 | | | | | | | |
| 28 | 1 | 129907-11341 | SHAFT ASSY, ROCKER | 1 | | | | | | | |
| 29 | 2 | 129907-11250 | SHAFT, ROCKER ARM | 1 | | | | | | | |
| 30 | 2 | 129907-11260 | SUPPORT, ROCKER ARM | 3 | | | | | | | |
| 31 | 2 | 129907-11270 | SUPPORT, ROCKER ARM | 2 | | | | | | | |
| 32 | 2 | 123907-11280 | WASHER | 8 | | | | | | | |
| 33 | 2 | 129907-11650 | ARM ASSY, ROCKER | 4 | | | | | | | |
| 35 | 3 | 129150-11230 | SCREW, VALVE ADJUST | 4 | | | | | | | |
| 36 | 3 | 129150-11750 | NUT, M8 | 4 | | | | | | | |
| 37 | 2 | 129907-11660 | ARM ASSY, ROCKER | 4 | | | | | | | |
| 39 | 3 | 129150-11230 | SCREW, VALVE ADJUST | 4 | | | | | | | |
| 40 | 3 | 129150-11750 | NUT, M8 | 4 | | | | | | | |
| 41 | 2 | 129907-11920 | RETAINER, NOZZLE | 4 | | | | | | | |
| 42 | 2 | 26226-080222 | STUD, M8X 22 | 2 | | | | | | | |
| 43 | 1 | 26106-080402 | BOLT, M8X 40 PLATED | 2 | | | | | | | |
| 44 | 1 | 26106-080602 | BOLT, M8X 60 PLATED | 4 | | | | | | | |
| 45 | 1 | 26106-080602 | BOLT, M8X 60 PLATED | 2 | | | | | | | |
| 46 | 1 | 26306-080002 | NUT, M8 | 2 | | | | | | | |
| 47 | 1 | 124160-01751 | CAP, FILLER | 1 | | | | | | | |
| 48 | 1 | 129907-11321 | BONNET ASSY, HEAD | 1 | | | | | | | |
| 49 | 2 | 129907-03011 | PLATE, BAFFLE | 1 | | | | | | | |
| 50 | 2 | 129907-03061 | BAFFLE, BREATHER | 1 | | | | | | | |
| 51 | 2 | 129907-03070 | BAFFLE, BREATHER | 1 | | | | | | | |
| 52 | 2 | 123907-03100 | DIAPHRAGM | 1 | | | | | | | |
| 53 | 2 | 123907-03110 | PLATE | 1 | | | | | | | |
| 54 | 2 | 123907-03120 | PLATE, BREATHER | 1 | | | | | | | |
| 55 | 2 | 123907-03140 | SPRING, DIAPHRAGM | 1 | | | | | | | |
| 57 | 2 | 129933-11310 | GASKET, BONNET | 1 | | | | | | | |
| 58 | 2 | 119640-61400 | PLUG | 1 | | | | | | | |
| 59 | 2 | 22857-500100 | SCREW, 5X10 | 6 | | | | | | | |

Remarks
(1)Spare part.

N:Old ←Yes/No→ New. Q:Old ←No/Yes→ New. R:Old ←Yes/Yes→ New. S:Old ←No/No→ New. W:Add. Z:Discontinued. F:Interchangeable by set. K:Q'ty Change

++ CONTINUE ++

Copyright (C) YANMAR GLOBAL CS CO., LTD. All RightsReserved.

# Fig.4. CYLINDER HEAD & BONNET



(A)=4TNV94L-ZXSDB
(B)=
(C)=
(D)=
(E)=
(F)=

| No. | Lev. | Parts No. | Description | Q'ty (A) | (B) | (C) | (D) | (E) | (F) | I | R |
|---|---|---|---|---|---|---|---|---|---|---|---|
| 60 | 2 | 22857-500100 | SCREW, 5X10 | 6 | | | | | | | |
| 61 | 1 | 124160-11360 | KNOB | 4 | | | | | | | |
| 62 | 1 | 24311-000120 | O-RING, 1AP12.0 | 4 | | | | | | | |
| 63 | 1 | 24311-000320 | O-RING, 1AP32.0 | 1 | | | | | | | |
| 64 | 1 | 129907-07900 | LIFTER, ENGINE | 2 | | | | | | | |
| 65 | 1 | 26106-080162 | BOLT, M8X 16 PLATED | 4 | | | | | | | |
| 66 | 1 | 129907-11800 | GUIDE, VALVE | 16 | | | | | | | 1 |

Remarks
(1)Spare part.

N:Old ←Yes/No→ New. Q:Old ←No/Yes→ New. R:Old ←Yes/Yes→ New. S:Old ←No/No→ New. W:Add. Z:Discontinued. F:Interchangeable by set. K:Q'ty Change

Copyright (C) YANMAR GLOBAL CS CO., LTD. All RightsReserved.

# Fig.5. SUCTION MANIFOLD

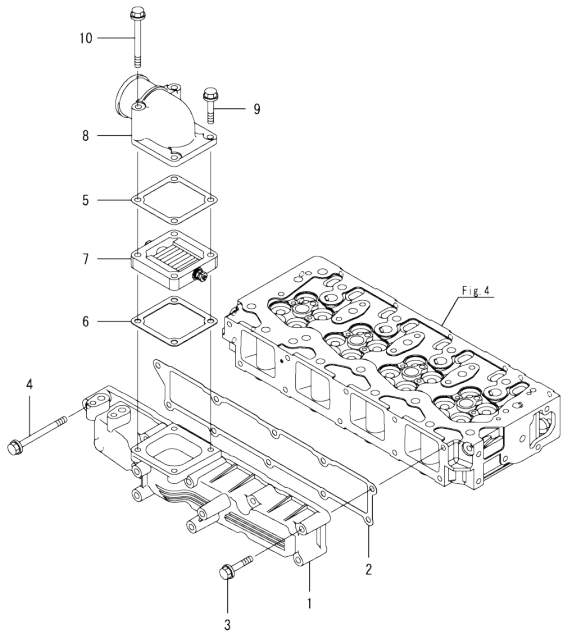




(A)=4TNV94L-ZXSDB (D)=
(B)= (E)=
(C)= (F)=

| No. | Lev. | Parts No. | Description | Q'ty (A) | (B) | (C) | (D) | (E) | (F) | I | R |
|---|---|---|---|---|---|---|---|---|---|---|---|
| 1 | 1 | 129907-12100 | MANIFOLD, AIR INTAKE | 1 | | | | | | | |
| 2 | 1 | 129907-12110 | GASKET, MANIFOLD | 1 | | | | | | | |
| 3 | 1 | 26106-080552 | BOLT, M8X 55 PLATED | 9 | | | | | | | |
| 4 | 1 | 26106-080852 | BOLT, M8X 85 PLATED | 1 | | | | | | | |
| 5 | 1 | 119129-77020 | GASKET | 1 | | | | | | | |
| 6 | 1 | 121850-77021 | GASKET, AIR HEATER | 1 | | | | | | | |
| 7 | 1 | 119005-77051 | HEATER, AIR | 1 | | | | | | | |
| 8 | 1 | 119129-77520 | BEND | 1 | | | | | | | |
| 9 | 1 | 26106-080402 | BOLT, M8X 40 PLATED | 2 | | | | | | | |
| 10 | 1 | 26106-080902 | BOLT, M8X 90 PLATED | 2 | | | | | | | |

N:Old ←Yes/No→ New. Q:Old ←No/Yes→ New. R:Old ←Yes/Yes→ New. S:Old ←No/No→ New. W:Add. Z:Discontinued. F:Interchangeable by set. K:Q'ty Change

Copyright (C) YANMAR GLOBAL CS CO., LTD. All RightsReserved.

# Fig.6. EXHAUST MANIFOLD & SILENCER

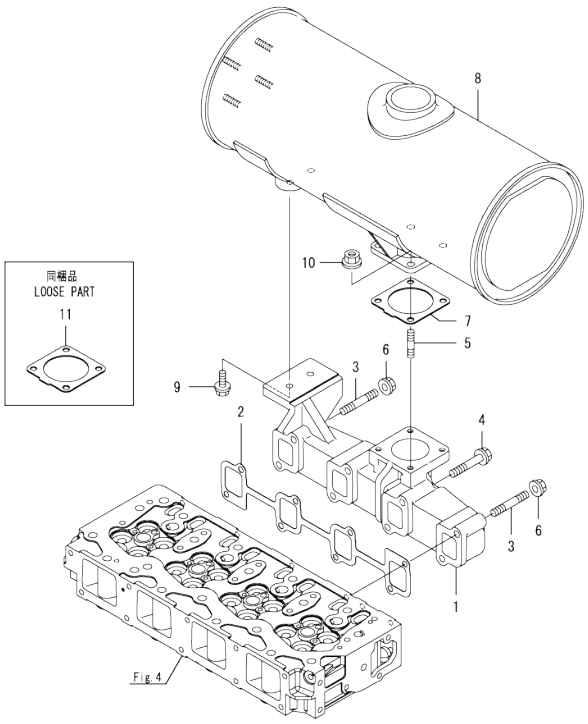




(A)=4TNV94L-ZXSDB (D)=
(B)= (E)=
(C)= (F)=

| No. | Lev. | Parts No. | Description | Q'ty (A) | (B) | (C) | (D) | (E) | (F) | I | R |
|---|---|---|---|---|---|---|---|---|---|---|---|
| 1 | 1 | 129907-13201 | MANIFOLD, EXHAUST | 1 | | | | | | | |
| 2 | 1 | 129900-13251 | GASKET, EXH.MANIFOLD | 1 | | | | | | | |
| 3 | 1 | 123900-13610 | BOLT, STUD M8X80 | 2 | | | | | | | |
| 4 | 1 | 123900-13630 | BOLT, M8X80 | 6 | | | | | | | |
| 5 | 1 | 119131-18320 | BOLT, STUD M8X22 | 4 | | | | | | | |
| 6 | 1 | 26306-080002 | NUT, M8 | 2 | | | | | | | |
| 7 | 1 | 129930-13201 | GASKET, SILENCER | 1 | | | | | | | |
| 8 | 1 | 129907-13500 | SILENCER | 1 | | | | | | | |
| 9 | 1 | 26106-080252 | BOLT, M8X 25 PLATED | 2 | | | | | | | |
| 10 | 1 | 26306-080002 | NUT, M8 | 4 | | | | | | | |
| 11 | 1 | 129930-13201 | GASKET, SILENCER | 1 | | | | | | | |

N:Old ◄Yes/No► New. Q:Old ◄No/Yes► New, R:Old ◄Yes/Yes► New, S:Old ◄No/No► New, W:Add, Z:Discontinued, F:Interchangeable by set, K:Q'ty Change

Copyright (C) YANMAR GLOBAL CS CO., LTD. All RightsReserved.

# Fig.7. CAMSHAFT & DRIVING GEAR

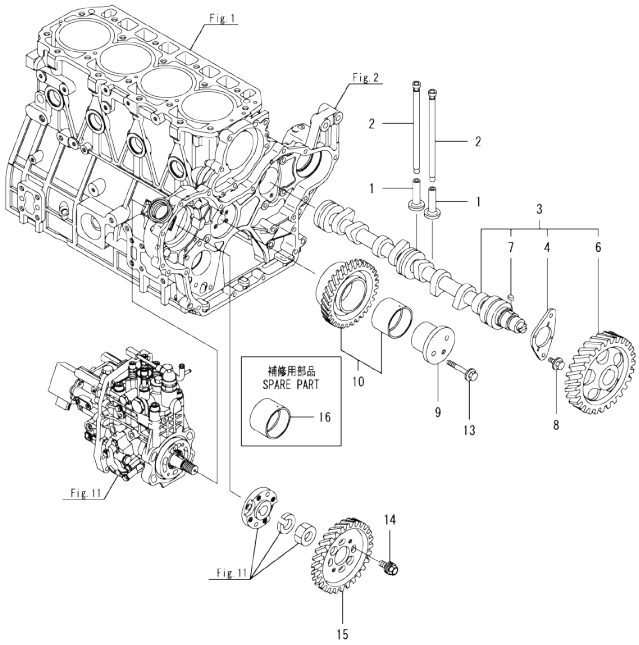


Remarks
(1)Spare part.



(A)=4TNV94L-ZXSDB (D)=
(B)= (E)=
(C)= (F)=

| No. | Lev. | Parts No. | Description | Q'ty (A) | (B) | (C) | (D) | (E) | (F) | I | R |
|---|---|---|---|---|---|---|---|---|---|---|---|
| 1 | 1 | 129150-14200 | TAPPET | 8 | | | | | | | |
| 2 | 1 | 129907-14400 | PUSH-ROD | 8 | | | | | | | |
| 3 | 1 | 129908-14581 | CAMSHAFT ASSY | 1 | | | | | | | |
| 4 | 2 | 129150-02450 | BEARING, THRUST | 1 | | | | | | | |
| 6 | 2 | 129900-14100 | GEAR, CAMSHAFT | 1 | | | | | | | |
| 7 | 2 | 22512-070140 | KEY, 7X 14 | 1 | | | | | | | |
| 8 | 1 | 26106-080162 | BOLT, M8X 16 PLATED | 2 | | | | | | | |
| 9 | 1 | 123900-25060 | SHAFT, IDLE GEAR | 1 | | | | | | | |
| 10 | 1 | 129900-25100 | GEAR ASSY, IDLE | 1 | | | | | | | |
| 13 | 1 | 26106-080552 | BOLT, M8X 55 PLATED | 3 | | | | | | | |
| 14 | 1 | 129953-25300 | BOLT | 4 | | | | | | | |
| 15 | 1 | 129907-25900 | GEAR, PUMP | 1 | | | | | | | |
| 16 | 1 | 129150-25920 | BUSH, IDLE GEAR | 1 | | | | | | | 1 |

N:Old ←Yes/No→ New. Q:Old ←No/Yes→ New. R:Old ←Yes/Yes→ New. S:Old ←No/No→ New. W:Add. Z:Discontinued. F:Interchangeable by set. K:Q'ty Change

Copyright (C) YANMAR GLOBAL CS CO., LTD. All RightsReserved.

# Fig.8. CRANKSHAFT & PISTON



(A)=4TNV94L-ZXSDB
(B)=
(C)=
(D)=
(E)=
(F)=

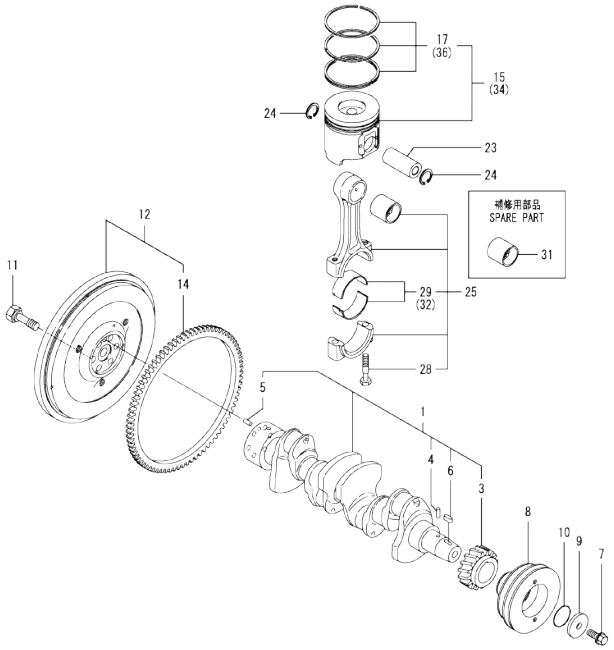


| No. | Lev. | Parts No. | Description | Q'ty (A) | (B) | (C) | (D) | (E) | (F) | I | R |
|---|---|---|---|---|---|---|---|---|---|---|---|
| 1 | 1 | 129902-21000 | CRANKSHAFT ASSY | 1 | | | | | | | |
| 3 | 2 | 129900-21200 | GEAR, CRANKSHAFT | 1 | | | | | | | |
| 4 | 2 | 121850-21290 | PIN | 1 | | | | | | | |
| 5 | 2 | 121850-21920 | PIN, PARALLEL 10X22 | 1 | | | | | | | |
| 6 | 2 | 22512-070140 | KEY, 7X 14 | 1 | | | | | | | |
| 7 | 1 | 129916-21610 | BOLT | 1 | | | | | | | |
| 8 | 1 | 129916-21620 | V-PULLEY, CRANKSHAFT | 1 | | | | | | | |
| 9 | 1 | 129960-21640 | WASHER | 1 | | | | | | | |
| 10 | 1 | 24341-000530 | O-RING, 1AS53.0 | 1 | | | | | | | |
| 11 | 1 | 121850-21130 | BOLT, FLYWHEEL | 6 | | | | | | | |
| 12 | 1 | 129953-21560 | FLYWHEEL ASSY | 1 | | | | | | | |
| 14 | 2 | 129900-21600 | GEAR, RING | 1 | | | | | | | |
| 15 | 1 | 129906-22090 | PISTON ASSY | 4 | | | | | | | |
| 17 | 2 | 129906-22050 | RING SET, PISTON | 4 | | | | | | | |
| 23 | 1 | 120130-22301 | PIN, PISTON | 4 | | | | | | | |
| 24 | 1 | 22252-000300 | RING, 30 | 8 | | | | | | | |
| 25 | 1 | 129900-23001 | ROD ASSY, CONNECTING | 4 | | | | | | | |
| 28 | 2 | 129900-23200 | BOLT, CONNECTING ROD | 8 | | | | | | | |
| 29 | 2 | 129900-23601 | BEARING, CRANK PIN | 4 | | | | | | | |
| 31 | 1 | 129900-23911 | BEARING, PISTON PIN | 4 | | | | | | | 1 |
| 32 | 1 | 129900-23611 | BEARING ASSY, 0.25US | 4 | | | | | | | 2 |
| 34 | 1 | 129906-22910 | PISTON ASSY, 0.25 OS | 4 | | | | | | | 3 |
| 36 | 2 | 129916-22950 | RING SET, 0.25 OS | 4 | | | | | | | 3 |

Remarks
(1)Spare part.
(2)Under-sized(U.S.=0.25)part.
(3)Over-sized(O.S.=0.25)part.

N:Old $\frac{\text{Yes}}{\text{No}}$ New. Q:Old $\frac{\text{No}}{\text{Yes}}$ New. R:Old $\frac{\text{Yes}}{\text{Yes}}$ New. S:Old $\frac{\text{No}}{\text{No}}$ New. W:Add. Z:Discontinued. F:Interchangeable by set. K:Q'ty Change

Copyright (C) YANMAR GLOBAL CS CO., LTD. All RightsReserved.

# Fig.9. LUB. OIL SYSTEM

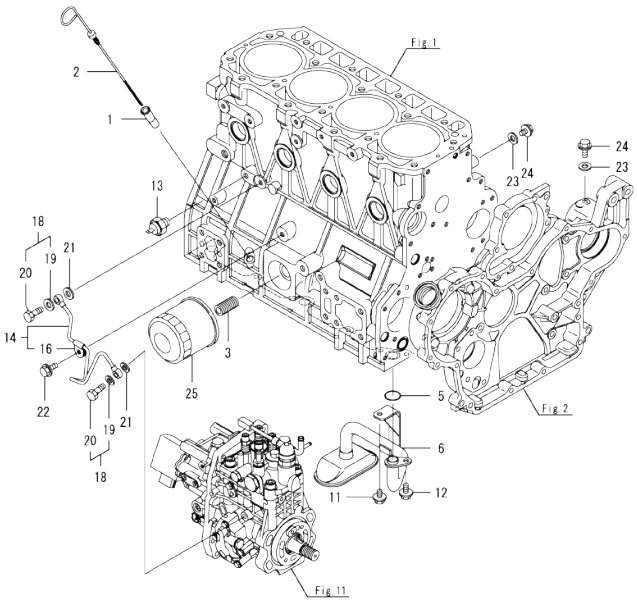




(A)=4TNV94L-ZXSDB
(B)=
(C)=
(D)=
(E)=
(F)=

| No. | Lev. | Parts No. | Description | Q'ty (A) | (B) | (C) | (D) | (E) | (F) | I | R |
|---|---|---|---|---|---|---|---|---|---|---|---|
| 1 | 1 | 121520-34810 | GUIDE, DIPSTICK | 1 | | | | | | | |
| 2 | 1 | 129906-34851 | DIPSTICK | 1 | | | | | | | |
| 3 | 1 | 119000-35140 | BOLT, STUD FILTER | 1 | | | | | | | |
| 5 | 1 | 129900-32030 | O-RING, P20 | 1 | | | | | | | |
| 6 | 1 | 129953-35000 | PIPE ASSY, OIL INLET | 1 | | | | | | | |
| 11 | 1 | 26106-080122 | BOLT, M8X 12 PLATED | 1 | | | | | | | |
| 12 | 1 | 26106-080162 | BOLT, M8X 16 PLATED | 1 | | | | | | | |
| 13 | 1 | 119761-39450 | SWITCH, HYDRAULIC | 1 | | | | | | | |
| 14 | 1 | 129927-39060 | PIPE ASSY, OIL | 1 | | | | | | | |
| 16 | 2 | 123907-39500 | RETAINER, PIPE | 1 | | | | | | | |
| 18 | 1 | 129005-59830 | BOLT ASSY, JOINT M8 | 2 | | | | | | | |
| 19 | 2 | 22190-080002 | WASHER, SEAL 6 | 2 | | | | | | | |
| 20 | 2 | 23857-030000 | BOLT, JOINT 3 | 2 | | | | | | | |
| 21 | 1 | 22190-080002 | WASHER, SEAL 6 | 2 | | | | | | | |
| 22 | 1 | 26106-080122 | BOLT, M8X 12 PLATED | 1 | | | | | | | |
| 23 | 1 | 22190-080002 | WASHER, SEAL 6 | 2 | | | | | | | |
| 24 | 1 | 26106-080122 | BOLT, M8X 12 PLATED | 2 | | | | | | | |
| 25 | 1 | 119005-35151 | FILTER, D80X100 | 1 | | | | | | | 1 |

Remarks
(1)Spare part.

N:Old ←Yes/No→ New. Q:Old ←No/Yes→ New, R:Old ←Yes/Yes→ New. S:Old ←No/No→ New. W:Add. Z:Discontinued. F:Interchangeable by set. K:Q'ty Change

Copyright (C) YANMAR GLOBAL CS CO., LTD. All RightsReserved.

# Fig.10. COOLING WATER SYSTEM

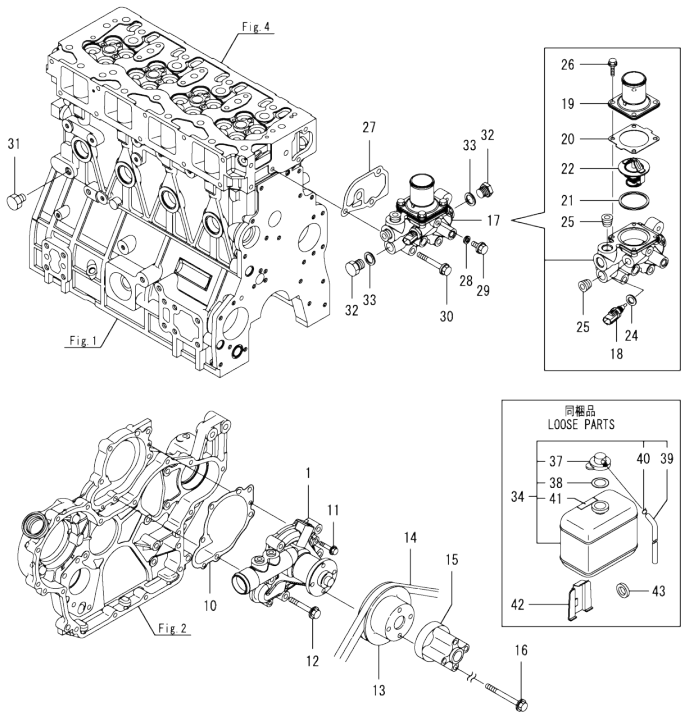




(A)=4TNV94L-ZXSDB (D)=
(B)= (E)=
(C)= (F)=

| No. | Lev. | Parts No. | Description | Q'ty (A) | (B) | (C) | (D) | (E) | (F) | I | R |
|---|---|---|---|---|---|---|---|---|---|---|---|
| 1 | 1 | 129900-42002 | PUMP ASSY, WATER | 1 | | | | | | | |
| 10 | 1 | 129900-42020 | GASKET, WATER PUMP | 1 | | | | | | | |
| 11 | 1 | 26106-060302 | BOLT, M6X 30 PLATED | 2 | | | | | | | |
| 12 | 1 | 26106-080552 | BOLT, M8X 55 PLATED | 5 | | | | | | | |
| 13 | 1 | 129916-42410 | V-PULLEY, C.W.PUMP | 1 | | | | | | | |
| 14 | 1 | 25153-004400 | V-BELT, B44 | 1 | | | | | | | |
| 15 | 1 | 119117-44760 | SPACER, FAN | 1 | | | | | | | |
| 16 | 1 | 26106-080802 | BOLT, M8X 80 PLATED | 4 | | | | | | | |
| 17 | 1 | 129932-49800 | CASE ASSY, THERMOSTA | 1 | | | | | | | |
| 18 | 2 | 129927-44900 | SENSOR, WATER TEMP. | 1 | | | | | | | |
| 19 | 2 | 129916-49530 | COVER, THERMOSTAT | 1 | | | | | | | |
| 20 | 2 | 121850-49540 | GASKET, THERMOSTAT | 1 | | | | | | | |
| 21 | 2 | 121850-49550 | GASKET, THERMOSTAT | 1 | | | | | | | |
| 22 | 2 | 121850-49801 | THERMOSTAT, 82C | 1 | | | | | | | |
| 24 | 2 | 22190-120002 | WASHER, SEAL 12 | 1 | | | | | | | |
| 25 | 2 | 23875-030000 | PLUG, R03 | 2 | | | | | | | |
| 26 | 2 | 26106-060202 | BOLT, M6X 20 PLATED | 4 | | | | | | | |
| 27 | 1 | 129900-49870 | GASKET, THERMOSTAT | 1 | | | | | | | |
| 28 | 1 | 23414-080000 | GASKET, 8X1.0 | 1 | | | | | | | |
| 29 | 1 | 26106-080122 | BOLT, M8X 12 PLATED | 1 | | | | | | | |
| 30 | 1 | 26106-080602 | BOLT, M8X 60 PLATED | 3 | | | | | | | |
| 31 | 1 | 171056-49120 | PLUG, DRAIN R1/4 | 1 | | | | | | | |
| 32 | 1 | 121450-42450 | PLUG, M16 | 2 | | | | | | | |
| 33 | 1 | 124465-44950 | GASKET, 16 | 2 | | | | | | | |
| 34 | 1 | 121857-44800 | TANK ASSY, RESERVE | 1 | | | | | | | |
| 37 | 2 | 121850-44850 | CAP | 1 | | | | | | | |
| 38 | 2 | 121850-44860 | GASKET | 1 | | | | | | | |
| 39 | 2 | 121850-44870 | HOSE | 1 | | | | | | | |
| 40 | 2 | 121850-44880 | CLAMP, HOSE | 1 | | | | | | | |
| 41 | 2 | 121850-44830 | LABEL, RESERVE TANK | 1 | | | | | | | |
| 42 | 1 | 120147-44810 | BRACKET | 1 | | | | | | | |
| 43 | 1 | 129150-49360 | GASKET | 1 | | | | | | | |

N:Old ←Yes/No→ New. Q:Old ←No/Yes→ New. R:Old ←Yes/Yes→ New. S:Old ←No/No→ New. W:Add. Z:Discontinued. F:Interchangeable by set. K:Q'ty Change

Copyright (C) YANMAR GLOBAL CS CO., LTD. All RightsReserved.

# Fig.11. FUEL INJECTION PUMP

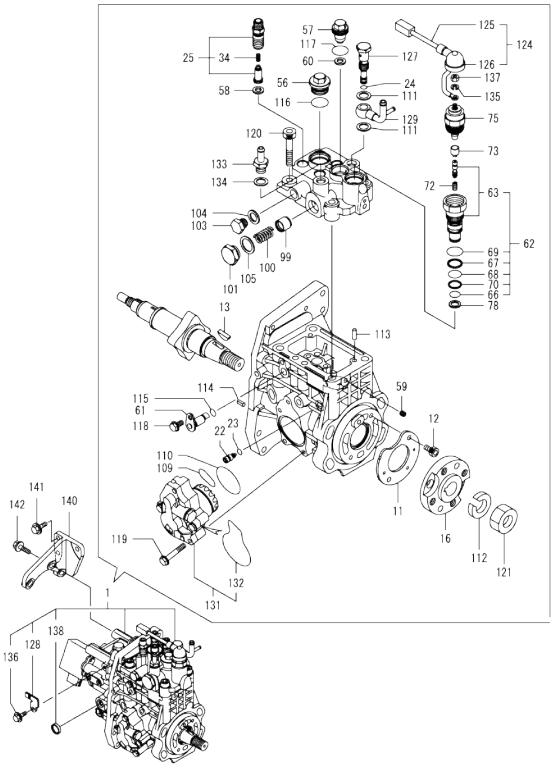


Remarks
(1)Governor(Fig.12)is incorporated in this Fuel Injection Pump (Ref.1).
(1)Eco Pump
Make sure to update the engines ECU information when replacing the Eco Pump.
Failing to do so will result in engine malfunction.



(A)=4TNV94L-ZXSDB (D)=
(B)= (E)=
(C)= (F)=

| No. | Lev. | Parts No. | Description | Q'ty (A) | (B) | (C) | (D) | (E) | (F) | I | R |
|---|---|---|---|---|---|---|---|---|---|---|---|
| 1 | 1 | 729932-51450 | FIE ASSY | 1 | | | | | | | 1 |
| 11 | 2 | 129928-51900 | COVER | 1 | | | | | | | |
| 12 | 2 | 129008-51920 | BOLT, SOCKET M6X10 | 2 | | | | | | | |
| 13 | 2 | 144626-51090 | FEATHER KEY, 5X19 | 1 | | | | | | | |
| 16 | 2 | 158563-51150 | FLANGE | 1 | | | | | | | |
| 22 | 2 | 158600-51270 | STOPPER, TAPPET | 1 | | | | | | | |
| 23 | 2 | 158563-51281 | O-RING, 4D S6 | 1 | | | | | | | |
| 24 | 2 | 158563-51281 | O-RING, 4D S6 | 1 | | | | | | | |
| 25 | 2 | 129509-51390 | VALVE ASSY, DELIVERY | 4 | | | | | | | |
| 34 | 3 | 158563-51330 | SPRING, DELIVERY | 4 | | | | | | | |
| 56 | 2 | 158601-51550 | PLUG, M22 | 1 | | | | | | | |
| 57 | 2 | 129907-51560 | PLUG, M16 | 1 | | | | | | | |
| 58 | 2 | 158552-51571 | GASKET, PLUG | 4 | | | | | | | |
| 59 | 2 | 158557-51570 | PLUG, RACK | 1 | | | | | | | |
| 60 | 2 | 129906-51580 | GASKET, PLUG | 1 | | | | | | | |
| 61 | 2 | 158552-51580 | LIFTER, LINK | 1 | | | | | | | |
| 62 | 2 | 129657-51590 | TIMER ASSY | 1 | | | | | | | |
| 63 | 3 | 129657-51600 | TIMER ASSY | 1 | | | | | | | |
| 66 | 3 | 158553-51670 | O-RING | 1 | | | | | | | |
| 67 | 3 | 119802-51680 | RING, BACKUP | 1 | | | | | | | |
| 68 | 3 | 119802-51690 | O-RING | 1 | | | | | | | |
| 69 | 3 | 24356-190200 | O-RING, 4D19020 | 1 | | | | | | | |
| 70 | 3 | 24372-000150 | RING, BACK UP T2P15 | 1 | | | | | | | |
| 72 | 2 | 119852-51630 | SPRING, TIMER | 1 | | | | | | | |
| 73 | 2 | 119852-51640 | CAP, TIMER | 1 | | | | | | | |
| 75 | 2 | 119852-51650 | VALVE ASSY, SOLENOID | 1 | | | | | | | |
| 78 | 2 | 158553-51680 | GASKET, TIMER | 1 | | | | | | | |
| 99 | 2 | 158601-51770 | PISTON, ACCUMLATOR | 1 | | | | | | | |
| 100 | 2 | 158552-51781 | SPRING, ACCUMULATOR | 1 | | | | | | | |
| 101 | 2 | 158601-51790 | PLUG | 1 | | | | | | | |
| 103 | 2 | 158553-51930 | PLUG, M12 | 1 | | | | | | | |
| 104 | 2 | 22190-120002 | WASHER, SEAL 12 | 1 | | | | | | | |
| 105 | 2 | 22190-180002 | WASHER, SEAL 18 | 1 | | | | | | | |
| 109 | 2 | 158552-52311 | O-RING | 1 | | | | | | | |
| 110 | 2 | 158552-52400 | O-RING, 4E S42 | 1 | | | | | | | |
| 111 | 2 | 22190-120002 | WASHER, SEAL 12 | 2 | | | | | | | |
| 112 | 2 | 22217-180000 | WASHER, SPRING 18 | 1 | | | | | | | |
| 113 | 2 | 22312-050140 | PIN, PARALLEL M5X14 | 2 | | | | | | | |
| 114 | 2 | 22351-050010 | PIN, SPRING 5.0X10 | 2 | | | | | | | |
| 115 | 2 | 24311-000070 | O-RING, 1AP7.0 | 1 | | | | | | | |
| 116 | 2 | 24356-190200 | O-RING, 4D19020 | 1 | | | | | | | |
| 117 | 2 | 24356-240210 | O-RING, 4D24021 | 1 | | | | | | | |
| 118 | 2 | 26106-060102 | BOLT, M6X 10 PLATED | 1 | | | | | | | |
| 119 | 2 | 26106-060352 | BOLT, M6X 35 PLATED | 4 | | | | | | | |
| 120 | 2 | 26450-100452 | BOLT, M10X 45 | 4 | | | | | | | |
| 121 | 2 | 26776-180002 | NUT, LOCK M18 | 1 | | | | | | | |
| 124 | 2 | 129927-51650 | HARNESS ASSY, WIRE | 1 | | | | | | | |
| 125 | 3 | 129927-51660 | HARNESS | 1 | | | | | | | |
| 126 | 3 | 129263-77941 | CAP, RUBBER | 1 | | | | | | | |
| 127 | 2 | 158601-51650 | JOINT, OVER FLOW | 1 | | | | | | | |
| 128 | 2 | 129927-51670 | BRACKET | 1 | | | | | | | |

N:Old ←Yes/No→ New. Q:Old ←No/Yes→ New. R:Old ←Yes/Yes→ New. S:Old ←No/No→ New. W:Add. Z:Discontinued. F:Interchangeable by set. K:Q'ty Change

++ CONTINUE ++

Copyright (C) YANMAR GLOBAL CS CO., LTD. All RightsReserved.

# Fig.11. FUEL INJECTION PUMP

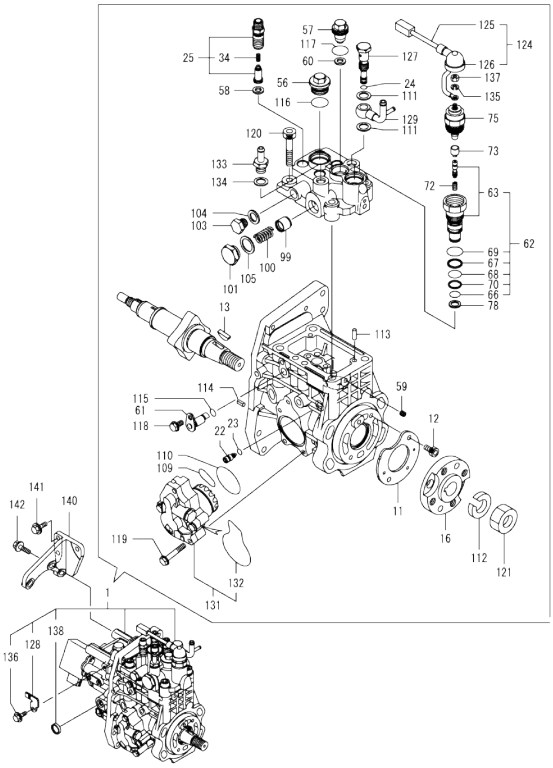


Remarks
(1)Governor(Fig.12)is incorporated in this Fuel Injection Pump (Ref.1).
(1)Eco Pump
Make sure to update the engines ECU information when replacing the Eco Pump.
Failing to do so will result in engine malfunction.



(A)=4TNV94L-ZXSDB (D)=
(B)= (E)=
(C)= (F)=

| No. | Lev. | Parts No. | Description | Q'ty (A) | (B) | (C) | (D) | (E) | (F) | I | R |
|---|---|---|---|---|---|---|---|---|---|---|---|
| 129 | 2 | 158552-51670 | JOINT, OVER FLOW | 1 | | | | | | | |
| 131 | 2 | 158552-52100 | PUMP ASSY, FUEL FEED | 1 | | | | | | | |
| 132 | 3 | 158552-52500 | O-RING | 1 | | | | | | | |
| 133 | 2 | 119934-59910 | JOINT, PIPE | 1 | | | | | | | |
| 134 | 2 | 22190-120002 | WASHER, SEAL 12 | 1 | | | | | | | |
| 135 | 2 | 22217-050000 | WASHER, SPRING 5 | 1 | | | | | | | |
| 136 | 2 | 26106-060122 | BOLT, M6X 12 PLATED | 1 | | | | | | | |
| 137 | 2 | 26716-050002 | NUT, M5 | 1 | | | | | | | |
| 138 | 2 | 27241-160000 | PLUG, 16 | 1 | | | | | | | |
| 140 | 1 | 129927-51250 | RETAINER, PUMP | 1 | | | | | | | |
| 141 | 1 | 26106-080202 | BOLT, M8X 20 PLATED | 3 | | | | | | | |
| 142 | 1 | 26106-080302 | BOLT, M8X 30 PLATED | 3 | | | | | | | |

N:Old ←Yes/No→ New. Q:Old ←No/Yes→ New. R:Old ←Yes/Yes→ New. S:Old ←No/No→ New. W:Add. Z:Discontinued. F:Interchangeable by set. K:Q'ty Change

Copyright (C) YANMAR GLOBAL CS CO., LTD. All RightsReserved.

# Fig.12. GOVERNOR

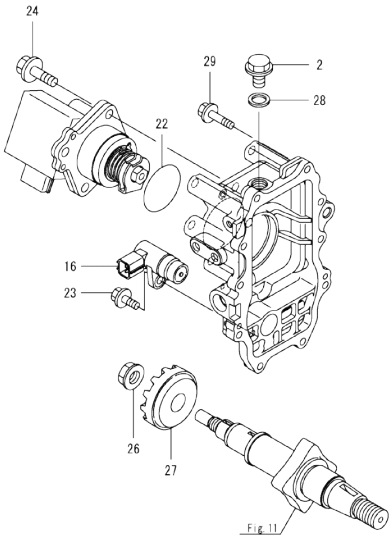


Remarks
*This figure(Governor)is incorporated
in the Fuel Injection Pump (Fig.11).



(A)=4TNV94L-ZXSDB (D)=
(B)= (E)=
(C)= (F)=

| No. | Lev. | Parts No. | Description | Q'ty (A) | (B) | (C) | (D) | (E) | (F) | I | R |
|---|---|---|---|---|---|---|---|---|---|---|---|
| 2 | 2 | 158553-51930 | PLUG, M12 | 1 | | | | | | | |
| 16 | 2 | 158557-61720 | SENSOR | 1 | | | | | | | |
| 22 | 2 | 24341-000480 | O-RING, 1AS48.0 | 1 | | | | | | | |
| 23 | 2 | 26106-060162 | BOLT, M6X 16 PLATED | 1 | | | | | | | |
| 24 | 2 | 26106-080252 | BOLT, M8X 25 PLATED | 3 | | | | | | | |
| 26 | 2 | 129008-61301 | NUT | 1 | | | | | | | |
| 27 | 2 | 158553-61780 | GEAR, SENSOR | 1 | | | | | | | |
| 28 | 2 | 22190-120002 | WASHER, SEAL 12 | 1 | | | | | | | |
| 29 | 2 | 26106-060252 | BOLT, M6X 25 PLATED | 10 | | | | | | | |

N:Old ←Yes/No→ New. Q:Old ←No/Yes→ New, R:Old ←Yes/Yes→ New. S:Old ←No/No→ New. W:Add. Z:Discontinued. F:Interchangeable by set. K:Q'ty Change

Copyright (C) YANMAR GLOBAL CS CO., LTD. All RightsReserved.

# Fig.13. FUEL INJECTION VALVE



(A)=4TNV94L-ZXSDB
(B)=
(C)=
(D)=
(E)=
(F)=

| No. | Lev. | Parts No. | Description | Q'ty (A) | (B) | (C) | (D) | (E) | (F) | I | R |
|---|---|---|---|---|---|---|---|---|---|---|---|
| 1 | 1 | 729906-53100 | FUEL INJECTOR ASSY | 4 | | | | | | | |
| 2 | 2 | 129906-53000 | NOZZLE ASSY, F.I. | 4 | | | | | | | |
| 5 | 2 | 114250-53080 | NUT, NOZZLE | 4 | | | | | | | |
| 9 | 2 | 114250-53120 | SPRING, NOZZLE | 4 | | | | | | | |
| 10 | 2 | 114250-53130 | SEAT, SPRING | 4 | | | | | | | |
| 11 | 2 | 114250-53140 | SPACER | 4 | | | | | | | |
| 12 | 2 | 114250-53210 | PIN | 8 | | | | | | | |
| 13 | 2 | 119803-53400 | SHIM SET | 4 | | | | | | | |
| 40 | 1 | 123907-11601 | SEAL, PIPE | 4 | | | | | | | |
| 41 | 1 | 122780-59100 | RETAINER | 2 | | | | | | | |
| 42 | 1 | 119305-59120 | RETAINER, PIPE | 1 | | | | | | | |
| 45 | 2 | 129150-59131 | BOLT, M4X14 | 1 | | | | | | | |
| 46 | 1 | 129550-59120 | RETAINER, PIPE | 1 | | | | | | | |
| 49 | 2 | 129150-59131 | BOLT, M4X14 | 2 | | | | | | | |
| 50 | 1 | 129907-59710 | SUPPORT | 1 | | | | | | | |
| 52 | 1 | 129907-59810 | PIPE ASSY, INJECTION | 1 | | | | | | | |
| 53 | 1 | 129907-59820 | PIPE ASSY, INJECTION | 1 | | | | | | | |
| 54 | 1 | 129907-59830 | PIPE ASSY, INJECTION | 1 | | | | | | | |
| 55 | 1 | 129907-59840 | PIPE ASSY, INJECTION | 1 | | | | | | | |
| 56 | 1 | 26106-060162 | BOLT, M6X 16 PLATED | 2 | | | | | | | |
| 57 | 1 | 26106-080182 | BOLT, M8X 18 PLATED | 1 | | | | | | | |

N:Old ◄Yes/No► New. Q:Old ◄No/Yes► New. R:Old ◄Yes/Yes► New. S:Old ◄No/No► New. W:Add. Z:Discontinued. F:Interchangeable by set. K:Q'ty Change

Copyright (C) YANMAR GLOBAL CS CO., LTD. All RightsReserved.

# Fig.14. FUEL LINE



(A)=4TNV94L-ZXSDB (D)=
(B)= (E)=
(C)= (F)=

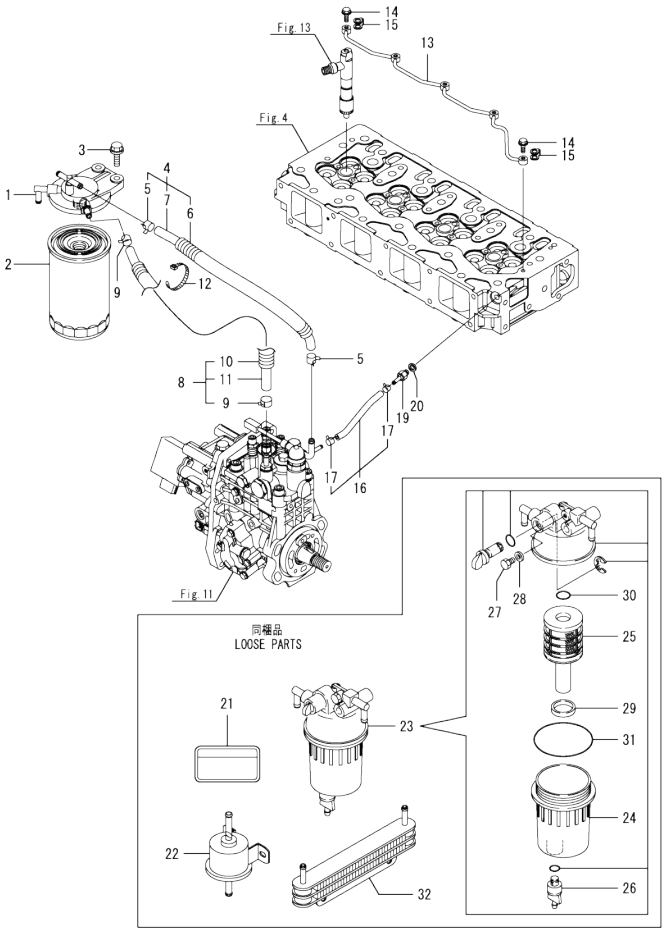


| No. | Lev. | Parts No. | Description | Q'ty (A) | (B) | (C) | (D) | (E) | (F) | I | R |
|---|---|---|---|---|---|---|---|---|---|---|---|
| 1 | 1 | 129004-55612 | BRACKET, FILTER | 1 | | | | | | | |
| 2 | 1 | 129907-55801 | FILTER, FUEL | 1 | | | | | | | |
| 3 | 1 | 26106-080302 | BOLT, M8X 30 PLATED | 2 | | | | | | | |
| 4 | 1 | 129457-59010 | HOSE ASSY, FUEL | 1 | | | | | | | |
| 5 | 2 | 124766-59050 | CLAMP, HOSE 11.5 | 2 | | | | | | | |
| 6 | 2 | 129957-59120 | TUBE, CORRUGATED 15 | 1 | | | | | | | |
| 7 | 2 | 105025-59750 | HOSE, FUEL | 1 | | | | | | | |
| 8 | 1 | 129981-59010 | HOSE ASSY, FUEL | 1 | | | | | | | |
| 9 | 2 | 124766-59050 | CLAMP, HOSE 11.5 | 2 | | | | | | | |
| 10 | 2 | 129950-59221 | TUBE, CORRUGATED 15 | 1 | | | | | | | |
| 11 | 2 | 129980-59510 | HOSE, FUEL | 1 | | | | | | | |
| 12 | 1 | 121750-59890 | BAND, NYLON | 1 | | | | | | | |
| 13 | 1 | 129907-59140 | PIPE ASSY, RETURN | 1 | | | | | | | |
| 14 | 1 | 123907-59540 | BOLT, PIPE JOINT M6 | 5 | | | | | | | |
| 15 | 1 | 123907-59550 | GASKET | 5 | | | | | | | |
| 16 | 1 | 129486-59551 | HOSE ASSY, RETURN | 1 | | | | | | | |
| 17 | 2 | 124722-59050 | CLAMP, HOSE 9 | 2 | | | | | | | |
| 19 | 1 | 123907-59560 | JOINT, HOSE | 1 | | | | | | | |
| 20 | 1 | 22190-080002 | WASHER, SEAL 6 | 1 | | | | | | | |
| 21 | 1 | 114110-07761 | LABEL, FUEL OIL CAUT | 1 | | | | | | | |
| 22 | 1 | 129612-52100 | PUMP, FUEL FEED | 1 | | | | | | | |
| 23 | 1 | 129245-55711 | SEPARATOR ASSY,WATER | 1 | | | | | | | |
| 24 | 2 | 129245-55720 | CUP ASSY, SEPARATOR | 1 | | | | | | | |
| 25 | 2 | 129242-55730 | ELEMENT, FUEL | 1 | | | | | | | |
| 26 | 2 | 129242-55740 | PLUG, DRAIN | 1 | | | | | | | |
| 27 | 2 | 129242-55750 | VALVE, AIR VENT | 1 | | | | | | | |
| 28 | 2 | 129242-55760 | GASKET, PLUG | 1 | | | | | | | |
| 29 | 2 | 129242-55770 | FLOAT | 1 | | | | | | | |
| 30 | 2 | 24311-000160 | O-RING, 1AP16.0 | 1 | | | | | | | |
| 31 | 2 | 24321-000750 | O-RING, 1AG75.0 | 1 | | | | | | | |
| 32 | 1 | 129973-55900 | COOLER.FUEL OIL | 1 | | | | | | | |

N:Old ←Yes/No→ New. Q:Old ←No/Yes→ New. R:Old ←Yes/Yes→ New. S:Old ←No/No→ New. W:Add. Z:Discontinued. F:Interchangeable by set. K:Q'ty Change

Copyright (C) YANMAR GLOBAL CS CO., LTD. All RightsReserved.

# Fig.15. STARTING MOTOR

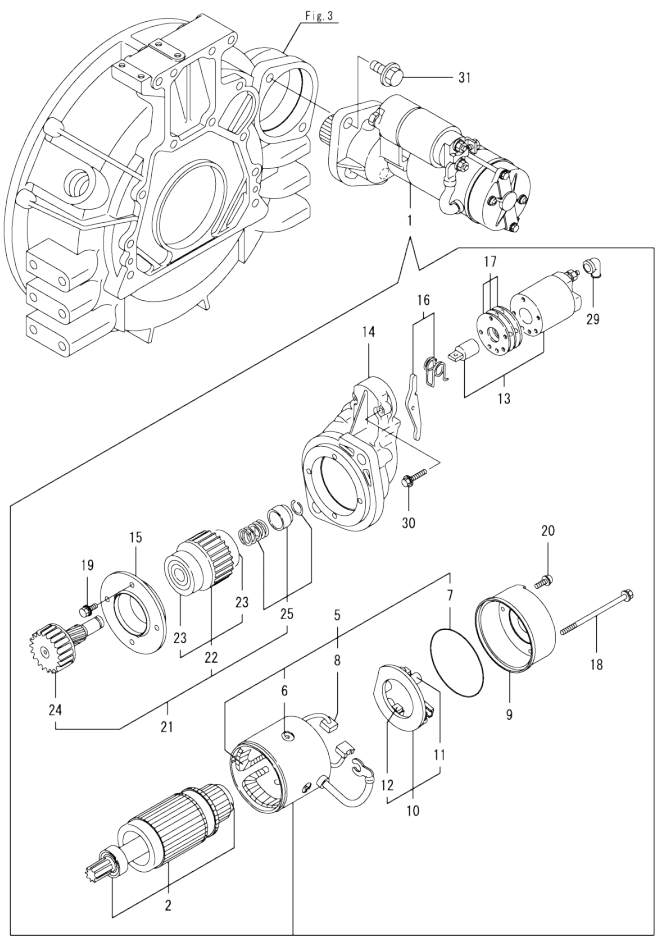




(A)=4TNV94L-ZXSDB (D)=
(B)= (E)=
(C)= (F)=

| No. | Lev. | Parts No. | Description | Q'ty (A) | (B) | (C) | (D) | (E) | (F) | I | R |
|---|---|---|---|---|---|---|---|---|---|---|---|
| 1 | 1 | 129940-77011 | STARTER ASSY | 1 | | | | | | | |
| 2 | 2 | 129940-77100 | ARMATURE ASSY | 1 | | | | | | | |
| 5 | 2 | 129940-77130 | COIL ASSY, FIELD | 1 | | | | | | | |
| 6 | 3 | 129940-77140 | SCREW, CORE SET | 4 | | | | | | | |
| 7 | 3 | 129940-77150 | O-RING | 1 | | | | | | | |
| 8 | 3 | 129940-77160 | BRUSH | 2 | | | | | | | |
| 9 | 2 | 129940-77171 | COVER | 1 | | | | | | | |
| 10 | 2 | 129940-77181 | HOLDER ASSY, BRUSH | 1 | | | | | | | |
| 11 | 3 | 129940-77190 | SPRING, BRUSH | 1 | | | | | | | |
| 12 | 3 | 129940-77200 | BRUSH | 2 | | | | | | | |
| 13 | 2 | 129940-77210 | SWITCH ASSY, MAGNET | 1 | | | | | | | |
| 14 | 2 | 129940-77221 | CASE, GEAR | 1 | | | | | | | |
| 15 | 2 | 129940-77230 | RETAINER, BEARING | 1 | | | | | | | |
| 16 | 2 | 129940-77240 | LEVER SET | 1 | | | | | | | |
| 17 | 2 | 129940-77250 | COVER KIT, DUST | 1 | | | | | | | |
| 18 | 2 | 129940-77260 | BOLT, THROUGH | 2 | | | | | | | |
| 19 | 2 | 129940-77270 | BOLT | 4 | | | | | | | |
| 20 | 2 | 129940-77280 | SCREW | 2 | | | | | | | |
| 21 | 2 | 123900-77510 | PINION ASSY | 1 | | | | | | | |
| 22 | 3 | 123900-77520 | CLUTCH ASSY | 1 | | | | | | | |
| 23 | 4 | X2240610100 | BEARING, BALL | 2 | | | | | | | |
| 24 | 3 | 123900-77540 | SHAFT, PINION | 1 | | | | | | | |
| 25 | 3 | 119131-77550 | STOPPER SET, PINION | 1 | | | | | | | |
| 29 | 2 | 121254-77810 | COVER, TERMINAL | 1 | | | | | | | |
| 30 | 2 | 114371-79070 | BOLT | 2 | | | | | | | |
| 31 | 1 | 26106-120252 | BOLT, M12X 25 PLATED | 2 | | | | | | | |

N:Old ←Yes/No→ New. Q:Old ←No/Yes→ New. R:Old ←Yes/Yes→ New. S:Old ←No/No→ New. W:Add. Z:Discontinued. F:Interchangeable by set. K:Q'ty Change

Copyright (C) YANMAR GLOBAL CS CO., LTD. All RightsReserved.

# Fig.16. GENERATOR

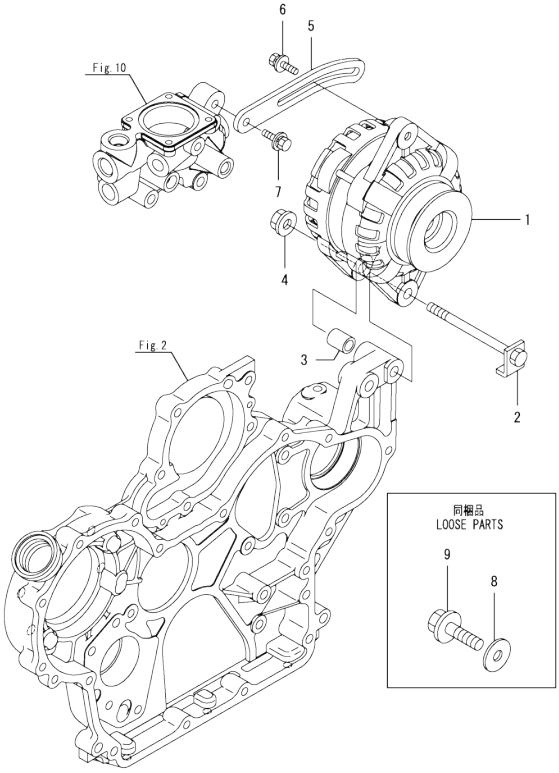




(A)=4TNV94L-ZXSDB (D)=
(B)= (E)=
(C)= (F)=

| No. | Lev. | Parts No. | Description | Q'ty (A) | (B) | (C) | (D) | (E) | (F) | I | R |
|---|---|---|---|---|---|---|---|---|---|---|---|
| 1 | 1 | 129908-77210 | ALTERNATOR | 1 | | | | | | | |
| 2 | 1 | 129908-77220 | BOLT, STOPPER M10 | 1 | | | | | | | |
| 3 | 1 | 129908-77360 | PIECE, DISTANCE | 1 | | | | | | | |
| 4 | 1 | 26306-100002 | NUT, M10 | 1 | | | | | | | |
| 5 | 1 | 129916-77300 | ADJUSTER, BELT | 1 | | | | | | | |
| 6 | 1 | 119810-77340 | BOLT, ADJUST L=30 | 1 | | | | | | | |
| 7 | 1 | 26014-080252 | BOLT, M8X 25 | 1 | | | | | | | |
| 8 | 1 | 129927-77690 | WASHER, ECU | 3 | | | | | | | |
| 9 | 1 | 26106-080252 | BOLT, M8X 25 PLATED | 3 | | | | | | | |

N:Old ◄Yes/No► New. Q:Old ◄No/Yes► New. R:Old ◄Yes/Yes► New. S:Old ◄No/No► New. W:Add. Z:Discontinued. F:Interchangeable by set. K:Q'ty Change

Copyright (C) YANMAR GLOBAL CS CO., LTD. All RightsReserved.

# Fig.17. ELECTRONIC CONTROL UNIT (ECU)

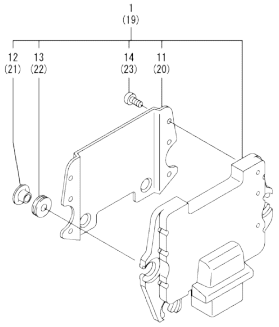


Remarks
(1)Eco ECU
This part cannot be ordered.
Replace the part using a Service ECU with the proper engine information installed.
(2)Service ECU
If the proper information is not installed, the engine will not operate.
To install proper information, go to an authorized Distributor.



(A)=4TNV94L-ZXSDB (D)=
(B)= (E)=
(C)= (F)=

| No. | Lev. | Parts No. | Description | Q'ty (A) | (B) | (C) | (D) | (E) | (F) | I | R |
|---|---|---|---|---|---|---|---|---|---|---|---|
| 1 | 1 | 129932-75020 | ECU ASSY,94L-ZXSDB | 1 | | | | | | | 1 |
| 11 | 2 | 129927-77600 | SHIELD, ECU | 1 | | | | | | | |
| 12 | 2 | 129927-77680 | COLLAR, CONTROL | 3 | | | | | | | |
| 13 | 2 | 119578-91351 | ABSORBER | 3 | | | | | | | |
| 14 | 2 | 22877-500080 | SCREW, 5X 8 | 6 | | | | | | | |
| 19 | 1 | 129927-75900 | ECU ASSY, SERVICE | 1 | | | | | | | 2 |
| 20 | 2 | 129927-77600 | SHIELD, ECU | 1 | | | | | | | |
| 21 | 2 | 129927-77680 | COLLAR, CONTROL | 3 | | | | | | | |
| 22 | 2 | 119578-91351 | ABSORBER | 3 | | | | | | | |
| 23 | 2 | 22877-500080 | SCREW, 5X 8 | 6 | | | | | | | |

N:Old $\frac{\text{Yes}}{\text{No}}$ New. Q:Old $\frac{\text{No}}{\text{Yes}}$ New. R:Old $\frac{\text{Yes}}{\text{Yes}}$ New. S:Old $\frac{\text{No}}{\text{No}}$ New. W:Add. Z:Discontinued. F:Interchangeable by set. K:Q'ty Change

Copyright (C) YANMAR GLOBAL CS CO., LTD. All RightsReserved.

# Fig.18. GASKET SET



(A)=4TNV94L-ZXSDB (D)=
(B)= (E)=
(C)= (F)=

| No. | Lev. | Parts No. | Description | Q'ty (A) | (B) | (C) | (D) | (E) | (F) | I | R |
|---|---|---|---|---|---|---|---|---|---|---|---|
| 1 | 1 | 129932-92760 | GASKET SET | 1 | | | | | | | 1 |
| 2 | 2 | 129906-01350 | GASKET, HEAD | 1 | | | | | | | |
| 3 | 2 | 129933-11310 | GASKET, BONNET | 1 | | | | | | | |
| 4 | 2 | 119803-11340 | SEAL, VALVE STEM | 8 | | | | | | | |
| 5 | 2 | 124160-11340 | SEAL, VALVE STEM | 8 | | | | | | | |
| 6 | 2 | 119802-11870 | PROTECTOR, NOZZLE | 4 | | | | | | | |
| 7 | 2 | 119625-11880 | SEAT, NOZZLE | 4 | | | | | | | |
| 8 | 2 | 129907-12110 | GASKET, MANIFOLD | 1 | | | | | | | |
| 9 | 2 | 129930-13201 | GASKET, SILENCER | 1 | | | | | | | |
| 10 | 2 | 129900-13251 | GASKET, EXH.MANIFOLD | 1 | | | | | | | |
| 11 | 2 | 129900-32030 | O-RING, P20 | 2 | | | | | | | |
| 12 | 2 | 129900-32040 | O-RING, P14 | 1 | | | | | | | |
| 13 | 2 | 129900-42020 | GASKET, WATER PUMP | 1 | | | | | | | |
| 14 | 2 | 124465-44950 | GASKET, 16 | 2 | | | | | | | |
| 15 | 2 | 121850-49540 | GASKET, THERMOSTAT | 1 | | | | | | | |
| 16 | 2 | 121850-49550 | GASKET, THERMOSTAT | 1 | | | | | | | |
| 17 | 2 | 129900-49870 | GASKET, THERMOSTAT | 1 | | | | | | | |
| 18 | 2 | 123907-59550 | GASKET | 5 | | | | | | | |
| 19 | 2 | 119129-77020 | GASKET | 2 | | | | | | | |
| 20 | 2 | 121850-77021 | GASKET, AIR HEATER | 1 | | | | | | | |
| 21 | 2 | 22190-080002 | WASHER, SEAL 6 | 7 | | | | | | | |
| 22 | 2 | 22190-120002 | WASHER, SEAL 12 | 1 | | | | | | | |
| 23 | 2 | 22190-220002 | WASHER, SEAL 22 | 1 | | | | | | | |
| 24 | 2 | 23414-080000 | GASKET, 8X1.0 | 1 | | | | | | | |
| 25 | 2 | 24311-000070 | O-RING, 1AP7.0 | 1 | | | | | | | |
| 26 | 2 | 24311-000120 | O-RING, 1AP12.0 | 8 | | | | | | | |
| 27 | 2 | 24311-000320 | O-RING, 1AP32.0 | 3 | | | | | | | |
| 28 | 2 | 24341-000530 | O-RING, 1AS53.0 | 1 | | | | | | | |
| 29 | 2 | 24351-030750 | O-RING, 1A3075 | 1 | | | | | | | |
| 30 | 1 | 129400-92440 | HONE, FLEX | 1 | | | | | | | 1 |
| 31 | 1 | 977770-1207F | GASKET.LIQUID | 1 | | | | | | | 1 |

Remarks
(1)Optional parts.

N:Old ←Yes/No→ New. Q:Old ←No/Yes→ New. R:Old ←Yes/Yes→ New. S:Old ←No/No→ New. W:Add. Z:Discontinued. F:Interchangeable by set. K:Q'ty Change

Copyright (C) YANMAR GLOBAL CS CO., LTD. All RightsReserved.

# Parts No. Index

| Parts No. | Fig. No. | Ref. No. |
|---|---|---|
| 105025-59750 | 14 | 7 |
| 114110-07761 | 14 | 21 |
| 114250-53080 | 13 | 5 |
| 114250-53120 | 13 | 9 |
| 114250-53130 | 13 | 10 |
| 114250-53140 | 13 | 11 |
| 114250-53210 | 13 | 12 |
| 114371-79070 | 15 | 30 |
| 119000-35140 | 9 | 3 |
| 119005-35151 | 9 | 25 |
| 119005-77051 | 5 | 7 |
| 119117-44760 | 10 | 15 |
| 119129-77020 | 5 | 5 |
| | 18 | 19 |
| 119129-77520 | 5 | 8 |
| 119131-18320 | 6 | 5 |
| 119131-77550 | 15 | 25 |
| 119305-59120 | 13 | 42 |
| 119578-91351 | 17 | 13 |
| | | 22 |
| 119593-11301 | 4 | 27 |
| 119620-01750 | 3 | 3 |
| 119620-11180 | 4 | 12 |
| 119625-11880 | 4 | 23 |
| | 18 | 7 |
| 119640-01640 | 3 | 8 |
| 119640-61400 | 4 | 58 |
| 119761-39450 | 9 | 13 |
| 119802-11870 | 4 | 22 |
| | 18 | 6 |
| 119802-51680 | 11 | 67 |
| 119802-51690 | 11 | 68 |
| 119803-11340 | 4 | 13 |
| | 18 | 4 |
| 119803-53400 | 13 | 13 |
| 119810-77340 | 16 | 6 |
| 119852-51630 | 11 | 72 |
| 119852-51640 | 11 | 73 |
| 119852-51650 | 11 | 75 |
| 119934-59910 | 11 | 133 |
| 120130-22301 | 8 | 23 |
| 120147-44810 | 10 | 42 |
| 121254-77810 | 15 | 29 |
| 121450-42450 | 10 | 32 |
| 121520-34810 | 9 | 1 |
| 121750-59890 | 14 | 12 |
| 121850-21130 | 8 | 11 |
| 121850-21290 | 8 | 4 |
| 121850-21920 | 8 | 5 |
| 121850-44830 | 10 | 41 |

| Parts No. | Fig. No. | Ref. No. |
|---|---|---|
| 121850-44850 | 10 | 37 |
| 121850-44860 | 10 | 38 |
| 121850-44870 | 10 | 39 |
| 121850-44880 | 10 | 40 |
| 121850-49540 | 10 | 20 |
| | 18 | 15 |
| 121850-49550 | 10 | 21 |
| | 18 | 16 |
| 121850-49801 | 10 | 22 |
| 121850-77021 | 5 | 6 |
| | 18 | 20 |
| 121857-44800 | 10 | 34 |
| 122780-59100 | 13 | 41 |
| 123900-13610 | 6 | 3 |
| 123900-13630 | 6 | 4 |
| 123900-25060 | 7 | 9 |
| 123900-77510 | 15 | 21 |
| 123900-77520 | 15 | 22 |
| 123900-77540 | 15 | 24 |
| 123907-03100 | 4 | 52 |
| 123907-03110 | 4 | 53 |
| 123907-03120 | 4 | 54 |
| 123907-03140 | 4 | 55 |
| 123907-11280 | 4 | 32 |
| 123907-11550 | 4 | 1 |
| 123907-11601 | 13 | 40 |
| 123907-11820 | 4 | 19 |
| 123907-11830 | 4 | 18 |
| 123907-39500 | 9 | 16 |
| 123907-59540 | 14 | 14 |
| 123907-59550 | 14 | 15 |
| | 18 | 18 |
| 123907-59560 | 14 | 19 |
| 124160-01751 | 2 | 33 |
| | 4 | 47 |
| 124160-11340 | 4 | 14 |
| | 18 | 5 |
| 124160-11360 | 4 | 61 |
| 124465-44950 | 10 | 33 |
| | 18 | 14 |
| 124722-59050 | 14 | 17 |
| 124766-59050 | 14 | 5 |
| | | 9 |
| 129004-55612 | 14 | 1 |
| 129005-59830 | 9 | 18 |
| 129008-51920 | 11 | 12 |
| 129008-61301 | 12 | 26 |
| 129100-01580 | 2 | 4 |
| | 3 | 1 |
| 129150-02450 | 7 | 4 |

| Parts No. | Fig. No. | Ref. No. |
|---|---|---|
| 129150-11230 | 4 | 35 |
| | | 39 |
| 129150-11750 | 4 | 17 |
| | | 36 |
| | | 40 |
| 129150-14200 | 7 | 1 |
| 129150-25920 | 7 | 16 |
| 129150-49360 | 10 | 43 |
| 129150-59131 | 13 | 45 |
| | | 49 |
| 129242-55730 | 14 | 25 |
| 129242-55740 | 14 | 26 |
| 129242-55750 | 14 | 27 |
| 129242-55760 | 14 | 28 |
| 129242-55770 | 14 | 29 |
| 129245-55711 | 14 | 23 |
| 129245-55720 | 14 | 24 |
| 129263-77941 | 11 | 126 |
| 129400-92440 | 18 | 30 |
| 129457-59010 | 14 | 4 |
| 129486-59551 | 14 | 16 |
| 129509-51390 | 11 | 25 |
| 129550-59120 | 13 | 46 |
| 129612-52100 | 14 | 22 |
| 129657-51590 | 11 | 62 |
| 129657-51600 | 11 | 63 |
| 129900-01200 | 1 | 27 |
| 129900-01250 | 1 | 4 |
| 129900-01850 | 2 | 37 |
| 129900-01870 | 2 | 38 |
| 129900-02020 | 1 | 6 |
| 129900-02341 | 1 | 33 |
| 129900-02410 | 1 | 9 |
| 129900-02931 | 1 | 24 |
| 129900-02941 | 1 | 36 |
| 129900-13251 | 6 | 2 |
| | 18 | 10 |
| 129900-14100 | 7 | 6 |
| 129900-21200 | 8 | 3 |
| 129900-21600 | 8 | 14 |
| 129900-23001 | 8 | 25 |
| 129900-23200 | 8 | 28 |
| 129900-23601 | 8 | 29 |
| 129900-23611 | 8 | 32 |
| 129900-23911 | 8 | 31 |
| 129900-25100 | 7 | 10 |
| 129900-32001 | 2 | 8 |
| 129900-32030 | 2 | 20 |
| | 9 | 5 |
| | 18 | 11 |

| Parts No. | Fig. No. | Ref. No. |
|---|---|---|
| 129900-32040 | 2 | 21 |
| | 18 | 12 |
| 129900-42002 | 10 | 1 |
| 129900-42020 | 10 | 10 |
| | 18 | 13 |
| 129900-49870 | 10 | 27 |
| | 18 | 17 |
| 129902-21000 | 8 | 1 |
| 129906-01350 | 1 | 28 |
| | 18 | 2 |
| 129906-22050 | 8 | 17 |
| 129906-22090 | 8 | 15 |
| 129906-22910 | 8 | 34 |
| 129906-34851 | 9 | 2 |
| 129906-51580 | 11 | 60 |
| 129906-53000 | 13 | 2 |
| 129907-03011 | 4 | 49 |
| 129907-03061 | 4 | 50 |
| 129907-03070 | 4 | 51 |
| 129907-07900 | 4 | 64 |
| 129907-11100 | 4 | 9 |
| 129907-11110 | 4 | 10 |
| 129907-11120 | 4 | 11 |
| 129907-11250 | 4 | 29 |
| 129907-11260 | 4 | 30 |
| 129907-11270 | 4 | 31 |
| 129907-11321 | 4 | 48 |
| 129907-11341 | 4 | 28 |
| 129907-11510 | 4 | 15 |
| 129907-11650 | 4 | 33 |
| 129907-11660 | 4 | 37 |
| 129907-11700 | 4 | 2 |
| 129907-11800 | 4 | 66 |
| 129907-11910 | 4 | 24 |
| 129907-11920 | 4 | 41 |
| 129907-11950 | 4 | 25 |
| 129907-12100 | 5 | 1 |
| 129907-12110 | 5 | 2 |
| | 18 | 8 |
| 129907-13201 | 6 | 1 |
| 129907-13500 | 6 | 8 |
| 129907-14400 | 7 | 2 |
| 129907-25900 | 7 | 15 |
| 129907-51560 | 11 | 57 |
| 129907-55801 | 14 | 2 |
| 129907-59140 | 14 | 13 |
| 129907-59710 | 13 | 50 |
| 129907-59810 | 13 | 52 |
| 129907-59820 | 13 | 53 |
| 129907-59830 | 13 | 54 |

# Parts No. Index


| Parts No. | Fig. No. | Ref. No. |
|---|---|---|
| 129907-59840 | 13 | 55 |
| 129908-14581 | 7 | 3 |
| 129908-77210 | 16 | 1 |
| 129908-77220 | 16 | 2 |
| 129908-77360 | 16 | 3 |
| 129916-01710 | 3 | 7 |
| 129916-01790 | 3 | 6 |
| 129916-01800 | 2 | 3 |
| 129916-21610 | 8 | 7 |
| 129916-21620 | 8 | 8 |
| 129916-22950 | 8 | 36 |
| 129916-42410 | 10 | 13 |
| 129916-49530 | 10 | 19 |
| 129916-77300 | 16 | 5 |
| 129927-39060 | 9 | 14 |
| 129927-42140 | 2 | 21 A |
| 129927-44900 | 10 | 18 |
| 129927-51250 | 11 | 140 |
| 129927-51650 | 11 | 124 |
| 129927-51660 | 11 | 125 |
| 129927-51670 | 11 | 128 |
| 129927-75900 | 17 | 19 |
| 129927-77600 | 17 | 11 |
| | | 20 |
| 129927-77680 | 17 | 12 |
| | | 21 |
| 129927-77690 | 16 | 8 |
| 129928-51900 | 11 | 11 |
| 129930-13201 | 6 | 7 |
| | | 11 |
| | 18 | 9 |
| 129932-49800 | 10 | 17 |
| 129932-75020 | 17 | 1 |
| 129932-92760 | 18 | 1 |
| 129933-11310 | 4 | 57 |
| | 18 | 3 |
| 129940-77011 | 15 | 1 |
| 129940-77100 | 15 | 2 |
| 129940-77130 | 15 | 5 |
| 129940-77140 | 15 | 6 |
| 129940-77150 | 15 | 7 |
| 129940-77160 | 15 | 8 |
| 129940-77171 | 15 | 9 |
| 129940-77181 | 15 | 10 |
| 129940-77190 | 15 | 11 |
| 129940-77200 | 15 | 12 |
| 129940-77210 | 15 | 13 |
| 129940-77221 | 15 | 14 |
| 129940-77230 | 15 | 15 |
| 129940-77240 | 15 | 16 |

| Parts No. | Fig. No. | Ref. No. |
|---|---|---|
| 129940-77250 | 15 | 17 |
| 129940-77260 | 15 | 18 |
| 129940-77270 | 15 | 19 |
| 129940-77280 | 15 | 20 |
| 129944-01500 | 2 | 7 |
| 129950-59221 | 14 | 10 |
| 129951-01740 | 2 | 5 |
| 129953-21560 | 8 | 12 |
| 129953-25300 | 7 | 14 |
| 129953-35000 | 9 | 6 |
| 129957-59120 | 14 | 6 |
| 129960-21640 | 8 | 9 |
| 129973-55900 | 14 | 32 |
| 129980-59510 | 14 | 11 |
| 129981-01600 | 3 | 2 |
| 129981-59010 | 14 | 8 |
| 144626-51090 | 11 | 13 |
| 158552-51571 | 11 | 58 |
| 158552-51580 | 11 | 61 |
| 158552-51670 | 11 | 129 |
| 158552-51781 | 11 | 100 |
| 158552-52100 | 11 | 131 |
| 158552-52311 | 11 | 109 |
| 158552-52400 | 11 | 110 |
| 158552-52500 | 11 | 132 |
| 158553-51670 | 11 | 66 |
| 158553-51680 | 11 | 78 |
| 158553-51930 | 11 | 103 |
| | 12 | 2 |
| 158553-61780 | 12 | 27 |
| 158557-51570 | 11 | 59 |
| 158557-61720 | 12 | 16 |
| 158563-51150 | 11 | 16 |
| 158563-51281 | 11 | 23 |
| | | 24 |
| 158563-51330 | 11 | 34 |
| 158600-51270 | 11 | 22 |
| 158601-51550 | 11 | 56 |
| 158601-51650 | 11 | 127 |
| 158601-51770 | 11 | 99 |
| 158601-51790 | 11 | 101 |
| 171031-11741 | 2 | 35 |
| 171051-01921 | 1 | 5 |
| 171056-49120 | 10 | 31 |
| 22190-080002 | 9 | 19 |
| | | 21 |
| | | 23 |
| | 14 | 20 |
| | 18 | 21 |
| 22190-120002 | 10 | 24 |

| Parts No. | Fig. No. | Ref. No. |
|---|---|---|
| 22190-120002 | 11 | 104 |
| | | 111 |
| | | 134 |
| | 12 | 28 |
| | 18 | 22 |
| 22190-180002 | 11 | 105 |
| 22190-220002 | 3 | 10 |
| | 18 | 23 |
| 22217-050000 | 11 | 135 |
| 22217-180000 | 11 | 112 |
| 22252-000300 | 8 | 24 |
| 22312-050140 | 11 | 113 |
| 22351-050010 | 11 | 114 |
| 22351-060012 | 1 | 10 |
| 22512-070140 | 7 | 7 |
| | 8 | 6 |
| 22857-500100 | 4 | 59 |
| | | 60 |
| 22877-500080 | 17 | 14 |
| | | 23 |
| 23414-080000 | 10 | 28 |
| | 18 | 24 |
| 23857-030000 | 9 | 20 |
| 23875-030000 | 10 | 25 |
| 23876-020000 | 4 | 6 |
| 23876-030000 | 1 | 11 |
| | | 12 |
| | | 13 |
| | 4 | 7 |
| 24311-000070 | 2 | 22 |
| | 11 | 115 |
| | 18 | 25 |
| 24311-000120 | 4 | 26 |
| | | 62 |
| | 18 | 26 |
| 24311-000160 | 14 | 30 |
| 24311-000320 | 2 | 34 |
| | | 36 |
| | 4 | 63 |
| | 18 | 27 |
| 24321-000750 | 14 | 31 |
| 24341-000480 | 12 | 22 |
| 24341-000530 | 8 | 10 |
| | 18 | 28 |
| 24351-030750 | 2 | 23 |
| | 18 | 29 |
| 24356-190200 | 11 | 69 |
| | | 116 |
| 24356-240210 | 11 | 117 |
| 24372-000150 | 11 | 70 |

| Parts No. | Fig. No. | Ref. No. |
|---|---|---|
| 25153-004400 | 10 | 14 |
| 26014-080252 | 16 | 7 |
| 26106-060102 | 11 | 118 |
| 26106-060122 | 11 | 136 |
| 26106-060162 | 12 | 23 |
| | 13 | 56 |
| 26106-060202 | 10 | 26 |
| 26106-060252 | 12 | 29 |
| 26106-060302 | 10 | 11 |
| 26106-060352 | 11 | 119 |
| 26106-080122 | 3 | 11 |
| | 9 | 11 |
| | | 22 |
| | | 24 |
| | 10 | 29 |
| 26106-080162 | 2 | 24 |
| | | 39 |
| | 4 | 65 |
| | 7 | 8 |
| | 9 | 12 |
| 26106-080182 | 13 | 57 |
| 26106-080202 | 2 | 25 |
| | | 26 |
| | 11 | 141 |
| 26106-080252 | 6 | 9 |
| | 12 | 24 |
| | 16 | 9 |
| 26106-080302 | 11 | 142 |
| | 14 | 3 |
| 26106-080402 | 2 | 27 |
| | 4 | 43 |
| | 5 | 9 |
| 26106-080452 | 2 | 28 |
| | | 29 |
| 26106-080552 | 5 | 3 |
| | 7 | 13 |
| | 10 | 12 |
| 26106-080602 | 4 | 44 |
| | | 45 |
| | 10 | 30 |
| 26106-080702 | 2 | 30 |
| 26106-080752 | 2 | 31 |
| 26106-080802 | 10 | 16 |
| 26106-080852 | 5 | 4 |
| 26106-080902 | 5 | 10 |
| 26106-120252 | 15 | 31 |
| 26206-100352 | 3 | 4 |
| 26206-100702 | 3 | 5 |
| 26216-100302 | 2 | 19 |
| 26226-080222 | 4 | 42 |

# Parts No. Index


| Parts No. | Fig. No. | Ref. No. |
|---|---|---|
| 26306-080002 | 4 | 46 |
| | 6 | 6 |
| | | 10 |
| 26306-100002 | 2 | 32 |
| | 16 | 4 |
| 26450-100452 | 11 | 120 |
| 26716-050002 | 11 | 137 |
| 26776-180002 | 11 | 121 |
| 27241-160000 | 11 | 138 |
| 27241-300000 | 1 | 14 |
| 27241-400000 | 4 | 8 |
| 27310-070001 | 4 | 20 |
| 729900-02801 | 1 | 30 |
| 729906-01561 | 1 | 1 |
| 729906-53100 | 13 | 1 |
| 729907-01559 | 2 | 1 |
| 729932-51450 | 11 | 1 |
| 977770-1207F | 18 | 31 |
| X2240610100 | 15 | 23 |

| Parts No. | Fig. No. | Ref. No. |
|---|---|---|

| Parts No. | Fig. No. | Ref. No. |
|---|---|---|

| Parts No. | Fig. No. | Ref. No. |
|---|---|---|