YANMAR

PARTS CATALOG

0CD50-M04180EN

Last update Apr., 2021

PREFACE

This parts catalog is the 1st edition of 4TNV94L-ZXSHYB for Hyundai Construction Equipment Co., Ltd.

Published : October, 2018

Contents

0CD50-M04180

Fig. No.	Fig. Name
ENGINE	
1.	CYLINDER BLOCK
2.	GEAR HOUSING
3.	FLYWHEEL HOUSING & OIL SUMP
4.	CYLINDER HEAD & BONNET
5.	SUCTION MANIFOLD
6.	EXHAUST MANIFOLD
7.	CAMSHAFT & DRIVING GEAR
8.	CRANKSHAFT & PISTON
9.	LUB. OIL SYSTEM
10.	COOLING WATER SYSTEM
11.	FUEL INJECTION PUMP
12.	GOVERNOR
13.	FUEL INJECTION VALVE
14.	FUEL PIPE
15.	STARTER MOTOR
16.	ELECTRONIC CONTROL UNIT(ECU)
17.	ACCESSORY
18.	GASKET SET

Fig.1. CYLINDER BLOCK

(A)=4TNV94L-ZXSHYB
(B)=
(C)=
(D)=
(E)=
(F)=

No.	Lev.	Parts No.	Description	Q'ty (A)	(B)	(C)	(D)	(E)	(F)	I	R
1	1	729906-01561	BLOCK ASSY, CYLINDER	1							
4	2	129900-01250	PLUG, 55	1							
5	2	171051-01921	PLUG, NPTF1	1							
6	2	129900-02020	BOLT, METAL CAP	10							
9	2	129900-02410	BUSH, CAMSHAFT	1							
10	2	22351-060012	PIN, SPRING 6.0X12	2							
11	2	23876-030000	PLUG, R03	1							
12	2	23876-030000	PLUG, R03	1							
13	2	23876-030000	PLUG, R03	1							
14	2	27241-300000	PLUG 30	8							
24	2	129927-02930	BEARING ASSY, THRUST	2							
27	1	129900-01200	BOLT, CYLINDER HEAD	18							
28	1	129906-01350	GASKET, HEAD	1							
29	1	729927-02800	BEARING ASSY, MAIN	5							1
32	1	129927-02340	BEARING ASSY,MAIN US	5							2
35	1	129927-02940	BEARING,THRUST0.25OS	2							3

Remarks
(1)Spare parts.
(2)Under-sized(U.S.=0.25) parts.
(3)Over-sized(O.S.=0.25) parts.

N:Old ◄Yes/No► New. Q:Old ◄No/Yes► New, R:Old ◄Yes/Yes► New, S:Old ◄No/No► New. W:Add. Z:Discontinued. F:Interchangeable by set. K:Q'ty Change

Copyright (C) 2018 YANMAR GLOBAL CS CO., LTD. All RightsReserved.

Fig.2. GEAR HOUSING

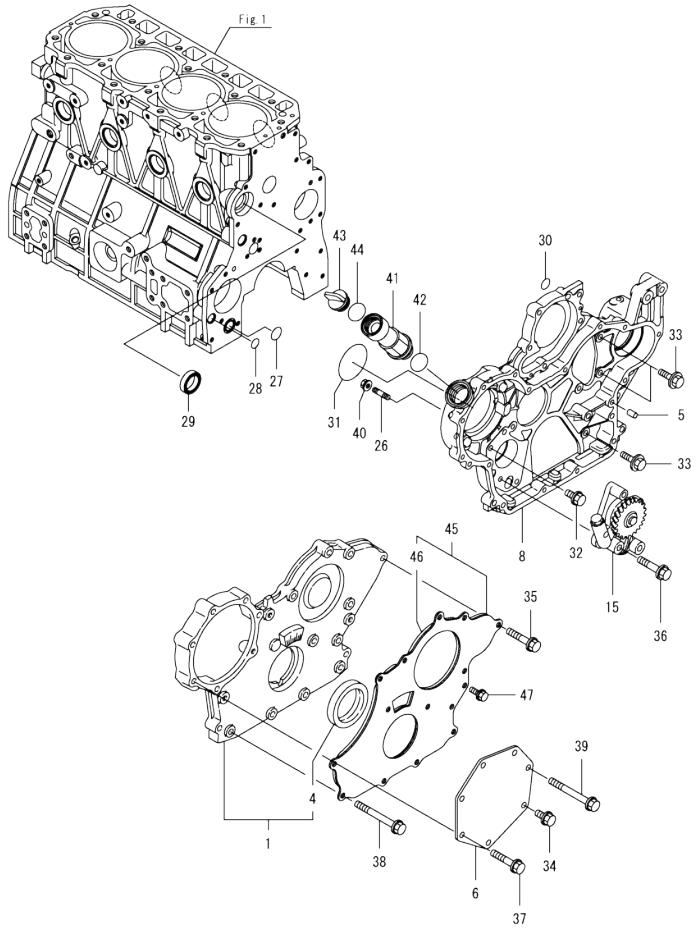

(A)=4TNV94L-ZXSHYB
(B)=
(C)=
(D)=
(E)=
(F)=

No.	Lev.	Parts No.	Description	Q'ty (A)	(B)	(C)	(D)	(E)	(F)	I	R
1	1	729907-01559	COVER ASSY, CASE	1							
4	2	129916-01800	SEAL, OIL	1							
5	1	129100-01580	PIN, PARALLEL 8X16	4							
6	1	129951-01740	COVER, PUMP TIMING	1							
8	1	129944-01500	CASE, GEAR	1							
15	1	129900-32001	PUMP ASSY, OIL	1							
26	1	26216-100302	STUD, M10X 30	4							
27	1	129900-32030	O-RING, P20	1							
28	1	129900-32040	O-RING, P14	1							
29	1	129927-42140	GASKET, PUMP OUTLET	1							
30	1	24311-000070	O-RING, 1AP7.0	1							
31	1	24351-030750	O-RING, 1A3075	1							
32	1	26106-080162	BOLT, M8X 16 PLATED	1							
33	1	26106-080202	BOLT, M8X 20 PLATED	3							
34	1	26106-080202	BOLT, M8X 20 PLATED	1							
35	1	26106-080402	BOLT, M8X 40 PLATED	5							
36	1	26106-080452	BOLT, M8X 45 PLATED	3							
37	1	26106-080452	BOLT, M8X 45 PLATED	5							
38	1	26106-080702	BOLT, M8X 70 PLATED	6							
39	1	26106-080752	BOLT, M8X 75 PLATED	1							
40	1	26306-100002	NUT, M10	4							
41	1	171031-11741	PIPE, FILLER	1							
42	1	24311-000320	O-RING, 1AP32.0	1							
43	1	124160-01751	CAP, FILLER	1							
44	1	24311-000320	O-RING, 1AP32.0	1							
45	1	129900-01850	COVER ASSY, CASE	1							
46	2	129900-01870	SPONGE, COVER	1							
47	1	26106-080162	BOLT, M8X 16 PLATED	3							

N:Old ◄Yes/No► New. Q:Old ◄No/Yes► New. R:Old ◄Yes/Yes► New. S:Old ◄No/No► New. W:Add. Z:Discontinued. F:Interchangeable by set. K:Q'ty Change

Copyright (C) 2018 YANMAR GLOBAL CS CO., LTD. All RightsReserved.

Fig.3. FLYWHEEL HOUSING & OIL SUMP

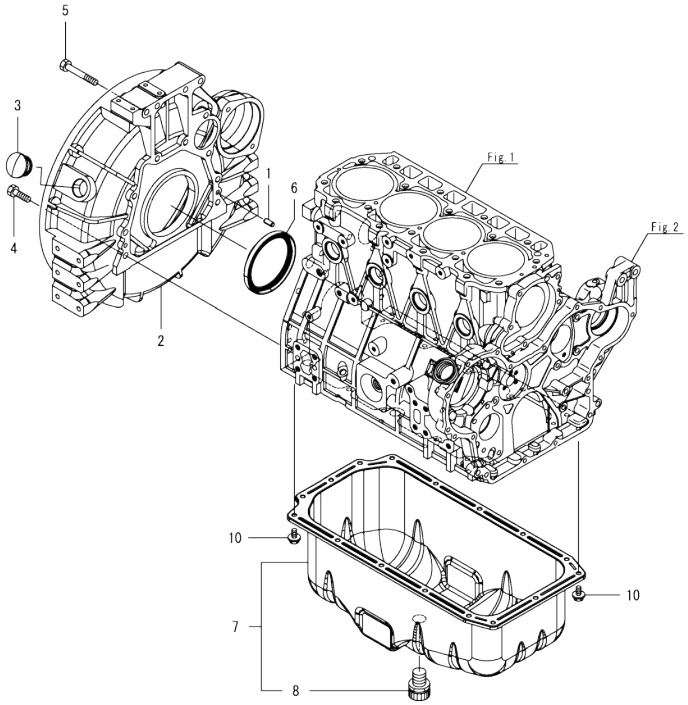

(A)=4TNV94L-ZXSHYB (D)=
(B)= (E)=
(C)= (F)=

No.	Lev.	Parts No.	Description	Q'ty (A)	(B)	(C)	(D)	(E)	(F)	I	R
1	1	129100-01580	PIN, PARALLEL 8X16	2							
2	1	129981-01600	HOUSING, FLYWHEEL	1							
3	1	119620-01750	CAP, WHEEL COVER	1							
4	1	26206-100352	BOLT, M10X 35 PLATED	9							
5	1	26206-100702	BOLT, M10X 70 PLATED	4							
6	1	129916-01790	SEAL, D115/95XT11	1							
7	1	129940-01720	OIL PAN ASSY	1							
8	2	129906-01640	COCK, DRAIN	1							
10	1	26106-080122	BOLT, M8X 12 PLATED	16							

N:Old ←Yes/No→ New. Q:Old ←No/Yes→ New. R:Old ←Yes/Yes→ New. S:Old ←No/No→ New. W:Add. Z:Discontinued. F:Interchangeable by set. K:Q'ty Change

Copyright (C) 2018 YANMAR GLOBAL CS CO., LTD. All RightsReserved.

Fig.4. CYLINDER HEAD & BONNET

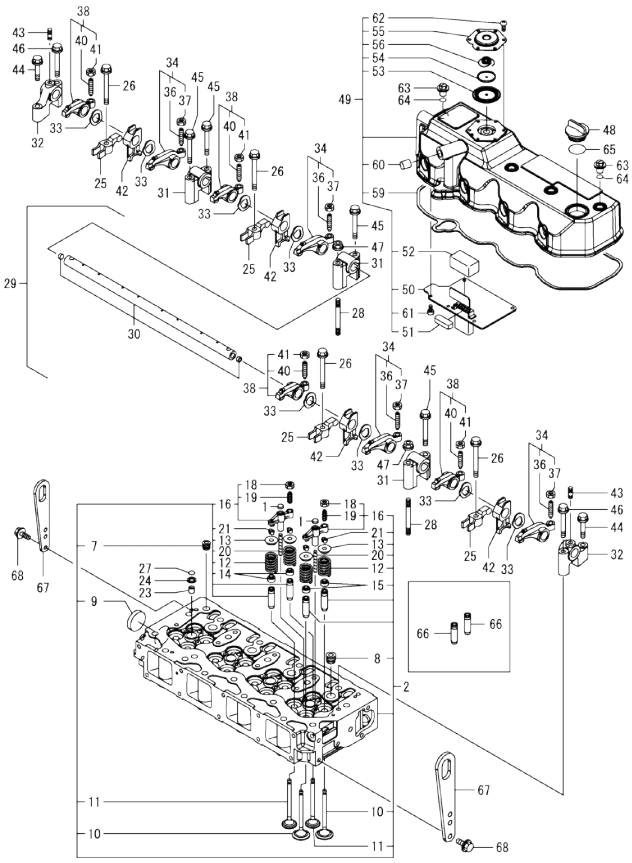

Remarks
(1)Spare parts.

(A)=4TNV94L-ZXSHYB (D)=
(B)= (E)=
(C)= (F)=

No.	Lev.	Parts No.	Description	Q'ty (A)	(B)	(C)	(D)	(E)	(F)	I	R
1	1	123907-11550	SEAT, VALVE BRIDGE	8							
2	1	129907-11700	HEAD ASSY, CYLINDER	1							
7	2	23876-020000	PLUG, R02	1							
8	2	23876-030000	PLUG, R03	4							
9	2	27241-400000	PLUG, 40	1							
10	2	129907-11100	VALVE, INTAKE	8							
11	2	129907-11110	VALVE, EXHAUST	8							
12	2	129907-11120	SPRING, VALVE	16							
13	2	119620-11180	RETAINER, SPRING	16							
14	2	119803-11340	SEAL, VALVE STEM	8							
15	2	124160-11340	SEAL, VALVE STEM	8							
16	2	129907-11510	BRIDGE ASSY, VALVE	8							
18	3	129150-11750	NUT, M8XP1.0	8							
19	3	123907-11830	ADJUSTER, BRIDGE	8							
20	2	123907-11820	GUIDE, BRIDGE	8							
21	2	27310-070001	COTTER, 7	16							
23	1	119802-11870	PROTECTOR, NOZZLE	4							
24	1	119625-11880	SEAT, NOZZLE	4							
25	1	129907-11960	RETAINER, NOZZLE	4							
26	1	129907-11950	BOLT, VALVE HOLDER	4							
27	1	24311-000120	O-RING, 1AP12.0	4							
28	1	119593-11301	STUD, M8X80	2							
29	1	129907-11341	SUPPORT ASSY, ROCKER	1							
30	2	129907-11250	SHAFT, ROCKER ARM	1							
31	2	129907-11260	SUPPORT, ROCKER A	3							
32	2	129907-11270	SUPPORT, ROCKER B	2							
33	2	123907-11280	WASHER, WAVE	8							
34	2	129907-11650	ARM ASSY, ROCKER INT	4							
36	3	129150-11230	SCREW, VALVE ADJUST	4							
37	3	129150-11750	NUT, M8XP1.0	4							
38	2	129907-11660	ARM ASSY, ROCKER EXH	4							
40	3	129150-11230	SCREW, VALVE ADJUST	4							
41	3	129150-11750	NUT, M8XP1.0	4							
42	2	129907-11920	RETAINER, NOZZLE	4							
43	2	26226-080222	STUD, M8X 22	2							
44	1	26106-080402	BOLT, M8X 40 PLATED	2							
45	1	26106-080602	BOLT, M8X 60 PLATED	4							
46	1	26106-080602	BOLT, M8X 60 PLATED	2							
47	1	26306-080002	NUT, M8	2							
48	1	124160-01751	CAP, FILLER	1							
49	1	129907-11321	BONNET ASSY, HEAD	1							
50	2	129907-03011	PLATE, BAFFLE	1							
51	2	129907-03061	BAFFLE, BREATHER	1							
52	2	129907-03070	BAFFLE, BREATHER	1							
53	2	123907-03100	DIAPHRAGM, BREATHER	1							
54	2	123907-03110	PLATE, CENTER	1							
55	2	123907-03120	PLATE, BREATHER	1							
56	2	123907-03140	SPRING, DIAPHRAGM	1							
59	2	129933-11310	GASKET, BONNET	1							
60	2	119640-61400	PLUG	1							
61	2	22857-500100	SCREW, 5X10	6							

N:Old ←Yes/No→ New. Q:Old ←No/Yes→ New. R:Old ←Yes/Yes→ New. S:Old ←No/No→ New. W:Add. Z:Discontinued. F:Interchangeable by set. K:Q'ty Change

++ CONTINUE ++

Copyright (C) 2018 YANMAR GLOBAL CS CO., LTD. All RightsReserved.

Fig.4. CYLINDER HEAD & BONNET

(A)=4TNV94L-ZXSHYB
(B)=
(C)=
(D)=
(E)=
(F)=

No.	Lev.	Parts No.	Description	Q'ty (A)	(B)	(C)	(D)	(E)	(F)	I	R
62	2	22857-500100	SCREW, 5X10	6							
63	1	124160-11360	KNOB, BONNET	4							
64	1	24311-000120	O-RING, 1AP12.0	4							
65	1	24311-000320	O-RING, 1AP32.0	1							
66	1	129907-11800	GUIDE, VALVE	16							1
67	1	129900-07900	LIFTER, ENGINE	2							
68	1	26106-080162	BOLT, M8X 16 PLATED	4							

Remarks
(1)Spare parts.

N:Old ←Yes/No→ New. Q:Old ←No/Yes→ New. R:Old ←Yes/Yes→ New. S:Old ←No/No→ New. W:Add. Z:Discontinued. F:Interchangeable by set. K:Q'ty Change

Copyright (C) 2018 YANMAR GLOBAL CS CO., LTD. All RightsReserved.

Fig.5. SUCTION MANIFOLD

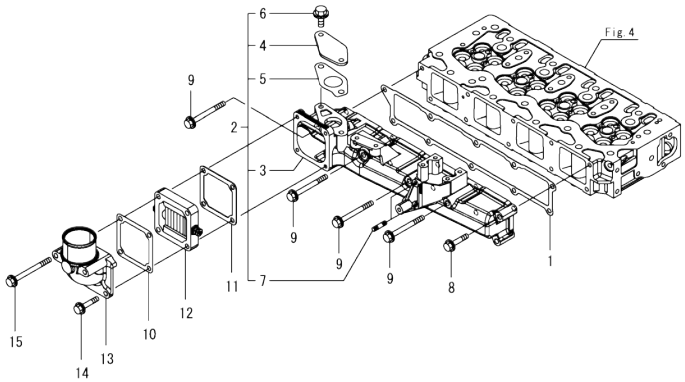

(A)=4TNV94L-ZXSHYB
(B)=
(C)=
(D)=
(E)=
(F)=

No.	Lev.	Parts No.	Description	Q'ty (A)	(B)	(C)	(D)	(E)	(F)	I	R
1	1	129907-12110	GASKET, MANIFOLD	1							
2	1	129940-12150	MANIFOLD ASSY,INTAKE	1							
3	2	129927-12100	MANIFOLD, AIR INTAKE	1							
4	2	129940-12110	COVER, MANIFOLD	1							
5	2	129927-13920	GASKET, EGR	1							
6	2	26106-100202	BOLT, M10X 20 PLATED	2							
7	2	26216-060202	STUD, M6X 20	2							
8	1	26106-080452	BOLT, M8X 45 PLATED	6							
9	1	26106-080802	BOLT, M8X 80 PLATED	4							
10	1	119129-77020	GASKET, AIR HEATER	1							
11	1	121850-77021	GASKET, AIR HEATER	1							
12	1	119005-77051	HEATER, AIR	1							
13	1	119129-77520	BEND, INLET	1							
14	1	26106-080402	BOLT, M8X 40 PLATED	2							
15	1	26106-080902	BOLT, M8X 90 PLATED	2							

N:Old ←Yes/No→ New. Q:Old ←No/Yes→ New. R:Old ←Yes/Yes→ New. S:Old ←No/No→ New. W:Add. Z:Discontinued. F:Interchangeable by set. K:Q'ty Change

Copyright (C) 2018 YANMAR GLOBAL CS CO., LTD. All RightsReserved.

Fig.6. EXHAUST MANIFOLD

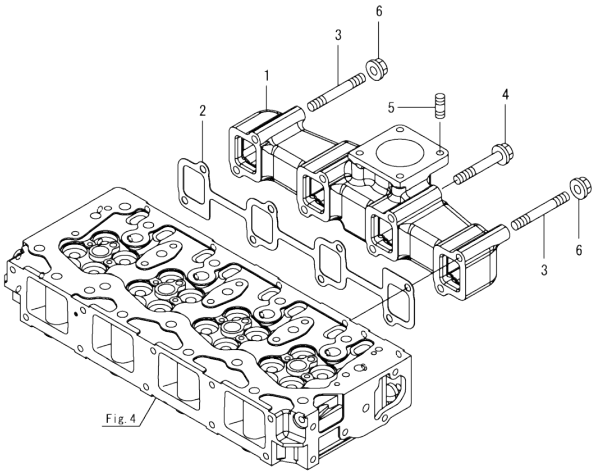

(A)=4TNV94L-ZXSHYB (D)=
(B)= (E)=
(C)= (F)=

No.	Lev.	Parts No.	Description	Q'ty (A)	(B)	(C)	(D)	(E)	(F)	I	R
1	1	129900-13200	MANIFOLD, EXHAUST	1							
2	1	129900-13251	GASKET, MANIFOLD	1							
3	1	123900-13610	STUD, M8X80	2							
4	1	129E00-13640	BOLT, M8X80 10.9T	6							
5	1	119131-18320	STUD, M8X22	4							
6	1	26306-080002	NUT, M8	2							

N:Old ◄Yes/No► New. Q:Old ◄No/Yes► New. R:Old ◄Yes/Yes► New. S:Old ◄No/No► New. W:Add. Z:Discontinued. F:Interchangeable by set. K:Q'ty Change

Copyright (C) 2018 YANMAR GLOBAL CS CO., LTD. All RightsReserved.

Fig.7. CAMSHAFT & DRIVING GEAR

(A)=4TNV94L-ZXSHYB (D)=
(B)= (E)=
(C)= (F)=

No.	Lev.	Parts No.	Description	Q'ty (A)	(B)	(C)	(D)	(E)	(F)	I	R
1	1	129150-14200	TAPPET	8							
2	1	129907-14400	ROD, PUSH	8							
3	1	129932-14580	CAMSHAFT ASSY	1							
4	2	129150-02450	METAL, THRUST	1							
6	2	129900-14100	GEAR, CAMSHAFT	1							
7	2	22512-070140	KEY, 7X 14	1							
8	1	26106-080142	BOLT, M8X 14 PLATED	2							
9	1	123900-25060	SHAFT, IDLE GEAR	1							
10	1	129927-25100	GEAR ASSY, IDLE	1							
13	1	26106-080552	BOLT, M8X 55 PLATED	3							
14	1	129953-25300	BOLT, PUMP BODY	4							
15	1	129907-25900	GEAR, PUMP	1							
16	1	129927-25920	BUSH, IDLE GEAR	1							1
17	1	158563-51150	FLANGE	1							

Remarks
(1)Spare parts.

N:Old $\xleftarrow[\text{No}]{\text{Yes}}$ New. Q:Old $\xleftarrow[\text{Yes}]{\text{No}}$ New. R:Old $\xleftarrow[\text{Yes}]{\text{Yes}}$ New. S:Old $\xleftarrow[\text{No}]{\text{No}}$ New. W:Add. Z:Discontinued. F:Interchangeable by set. K:Q'ty Change

Copyright (C) 2018 YANMAR GLOBAL CS CO., LTD. All RightsReserved.

Fig.8. CRANKSHAFT & PISTON

(A)=4TNV94L-ZXSHYB
(B)=
(C)=
(D)=
(E)=
(F)=

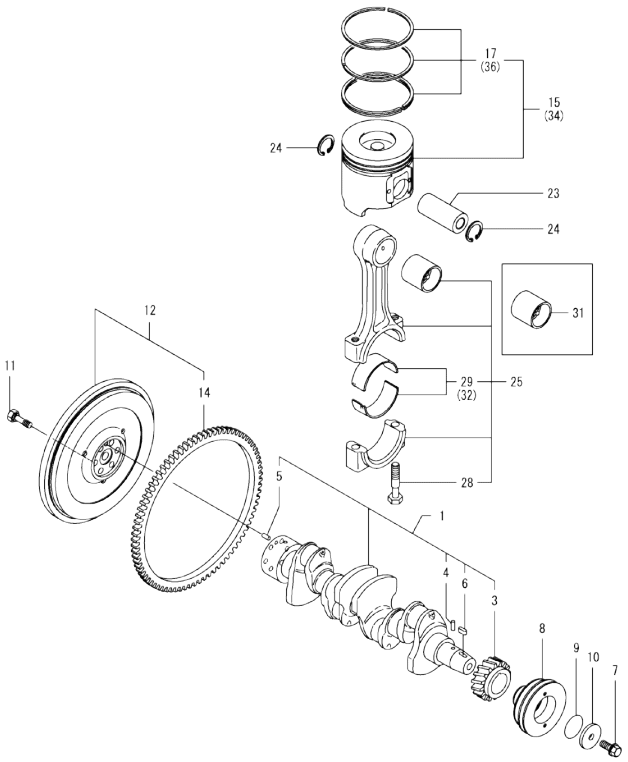

No.	Lev.	Parts No.	Description	Q'ty (A)	(B)	(C)	(D)	(E)	(F)	I	R
1	1	129902-21000	CRANKSHAFT ASSY	1							
3	2	129900-21200	GEAR, CRANKSHAFT	1							
4	2	121850-21290	PIN, CRANK GEAR	1							
5	2	121850-21920	PIN, PARALLEL 10X22	1							
6	2	22512-070140	KEY, 7X 14	1							
7	1	129916-21610	BOLT, V-PULLEY	1							
8	1	129916-21620	V-PULLEY, CRANKSHAFT	1							
9	1	129960-21930	GASKET, WASHER	1							
10	1	129960-21940	WASHER, V-PULLEY	1							
11	1	121850-21130	BOLT, FLYWHEEL	6							
12	1	129953-21581	FLYWHEEL ASSY	1							
14	2	129900-21600	GEAR, RING	1							
15	1	129906-22090	PISTON ASSY	4							
17	2	129906-22050	RING SET, PISTON	4							
23	1	120130-22301	PIN, PISTON	4							
24	1	22252-000300	RING, 30	8							
25	1	129900-23001	ROD ASSY, CONNECTING	4							
28	2	129900-23200	BOLT, CONNECTING ROD	8							
29	2	129927-23600	BEARING ASSY, PIN	4							
31	1	129900-23911	METAL, PISTON PIN	4							1
32	1	129927-23610	BEARING ASSY, PIN US	4							2
34	1	729928-22900	PISTON ASSY, 0.25 OS	4							3
36	2	729927-22950	RING SET, PISTON .25	4							3

Remarks
(1)Spare parts.
(2)Under-sized(U.S.=0.25) parts.
(3)Over-sized(O.S.=0.25) parts.

N:Old ←Yes/No→ New. Q:Old ←No/Yes→ New, R:Old ←Yes/Yes→ New, S:Old ←No/No→ New, W:Add, Z:Discontinued, F:Interchangeable by set, K:Q'ty Change

Copyright (C) 2018 YANMAR GLOBAL CS CO., LTD. All RightsReserved.

Fig.9. LUB. OIL SYSTEM

(A)=4TNV94L-ZXSHYB
(B)=
(C)=
(D)=
(E)=
(F)=

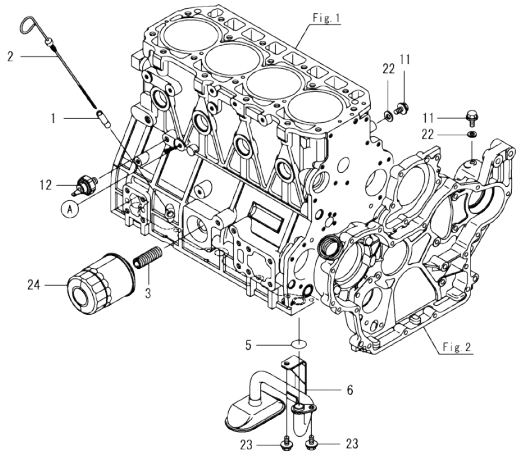

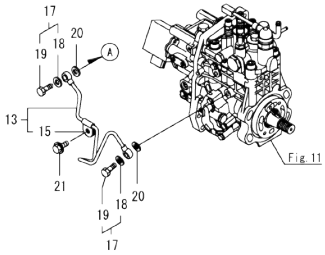

No.	Lev.	Parts No.	Description	Q'ty (A)	(B)	(C)	(D)	(E)	(F)	I	R
1	1	121520-34810	GUIDE, DIPSTICK	1							
2	1	129906-34851	DIPSTICK, OIL	1							
3	1	119000-35140	BOLT, FILTER	1							
5	1	129900-32030	O-RING, P20	1							
6	1	129953-35000	PIPE ASSY, OIL INLET	1							
11	1	26106-080122	BOLT, M8X 12 PLATED	2							
12	1	119761-39450	SWITCH, HYDRAULIC	1							
13	1	129927-39060	PIPE ASSY, OIL	1							
15	2	123907-39500	RETAINER, PIPE	1							
17	1	129005-59830	BOLT ASSY, JOINT M8	2							
18	2	22190-080002	WASHER, SEAL 8	2							
19	2	23857-030000	BOLT, JOINT 3	2							
20	1	22190-080002	WASHER, SEAL 8	2							
21	1	26106-080122	BOLT, M8X 12 PLATED	1							
22	1	22190-080002	WASHER, SEAL 8	2							
23	1	26106-080122	BOLT, M8X 12 PLATED	2							
24	1	119005-35151	FILTER, OIL D80X100	1							1

Remarks
(1)Spare parts.

N:Old $\frac{\text{Yes}}{\text{No}}$ New. Q:Old $\frac{\text{No}}{\text{Yes}}$ New. R:Old $\frac{\text{Yes}}{\text{Yes}}$ New. S:Old $\frac{\text{No}}{\text{No}}$ New. W:Add. Z:Discontinued. F:Interchangeable by set. K:Q'ty Change

Copyright (C) 2018 YANMAR GLOBAL CS CO., LTD. All RightsReserved.

Fig.10. COOLING WATER SYSTEM

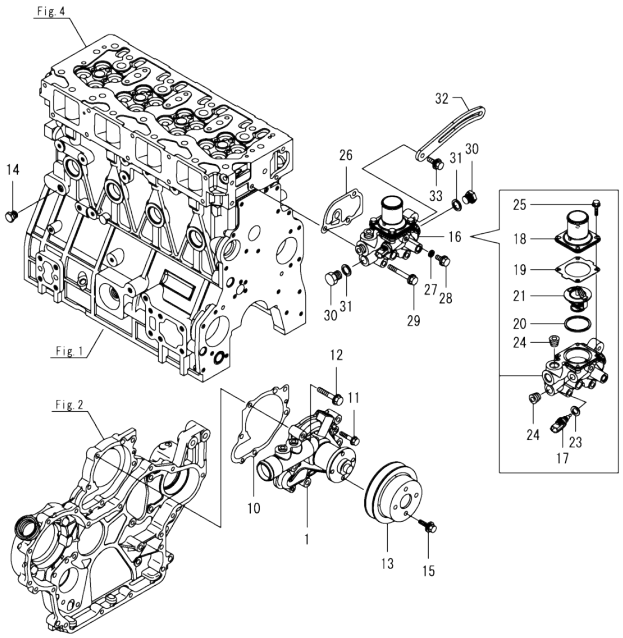

(A)=4TNV94L-ZXSHYB (D)=
(B)= (E)=
(C)= (F)=

No.	Lev.	Parts No.	Description	Q'ty (A)	(B)	(C)	(D)	(E)	(F)	I	R
1	1	129900-42003	PUMP ASSY, WATER	1							
10	1	129900-42020	GASKET, WATER PUMP	1							
11	1	26106-060302	BOLT, M6X 30 PLATED	2							
12	1	26106-080552	BOLT, M8X 55 PLATED	5							
13	1	129928-42410	V-PULLEY, PUMP	1							
14	1	171056-49120	PLUG, DRAIN R1/4	1							
15	1	26018-080162	BOLT, M8X 16	4							
16	1	129932-49800	CASE ASSY,THERMOSTAT	1							
17	2	129927-44900	SENSOR, TEMPERATURE	1							
18	2	129916-49530	COVER, THERMOSTAT	1							
19	2	121850-49540	GASKET, THERMOSTAT	1							
20	2	121850-49550	GASKET, THERMOSTAT	1							
21	2	121850-49801	THERMOSTAT, 82C	1							
23	2	22190-120002	WASHER, SEAL 12	1							
24	2	23875-030000	PLUG, R03	2							
25	2	26106-060202	BOLT, M6X 20 PLATED	4							
26	1	129900-49870	GASKET, THERMOSTAT	1							
27	1	23414-080000	GASKET, 8X1.0	1							
28	1	26106-080122	BOLT, M8X 12 PLATED	1							
29	1	26106-080602	BOLT, M8X 60 PLATED	3							
30	1	121450-42450	PLUG, M16	2							
31	1	124465-44950	GASKET, 16	2							
32	1	129916-77300	ADJUSTER, BELT	1							
33	1	26014-080252	BOLT, M8X 25	1							

N:Old ←Yes/No→ New. Q:Old ←No/Yes→ New. R:Old ←Yes/Yes→ New. S:Old ←No/No→ New. W:Add. Z:Discontinued. F:Interchangeable by set. K:Q'ty Change

Copyright (C) 2018 YANMAR GLOBAL CS CO., LTD. All RightsReserved.

Fig.11. FUEL INJECTION PUMP

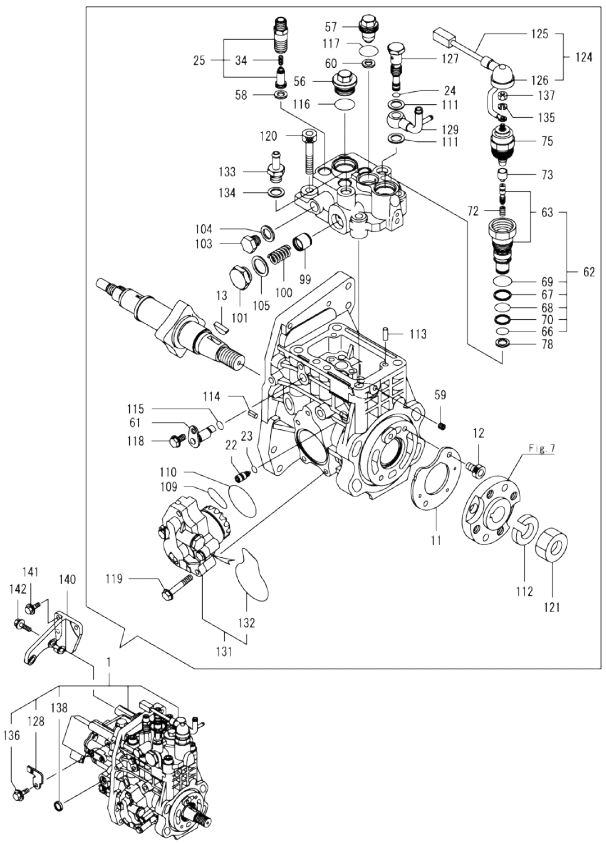

Remarks
(1)Governor(Fig.12) is incorporated in this Fuel Injection Pump(No.1).
(1)Eco Pump
Make sure to update the engines ECU information when replacing the Eco pump.
Failing to do so will result in engine malfunction.

(A)=4TNV94L-ZXSHYB
(B)=
(C)=
(D)=
(E)=
(F)=

No.	Lev.	Parts No.	Description	Q'ty (A)	(B)	(C)	(D)	(E)	(F)	I	R
1	1	729984-51300	FIE ASSY	1							1
11	2	129928-51900	COVER, OIL	1							
12	2	129008-51920	BOLT, M6X10	2							
13	2	144626-51090	KEY, FEATHER 5X19	1							
22	2	158600-51270	STOPPER, TAPPET	1							
23	2	158563-51281	O-RING, 4D S6	1							
24	2	158563-51281	O-RING, 4D S6	1							
25	2	129509-51390	VALVE ASSY, DELIVERY	4							
34	3	158563-51330	SPRING, DELIVERY	4							
56	2	158601-51550	PLUG, M22	1							
57	2	129907-51560	PLUG, M16	1							
58	2	158552-51571	GASKET, BARREL PLUG	4							
59	2	158557-51570	PLUG, RACK	1							
60	2	129906-51580	GASKET, BARREL PLUG	1							
61	2	158552-51580	LIFTER, LINK	1							
62	2	129657-51590	TIMER ASSY	1							
63	3	129657-51600	TIMER ASSY	1							
66	3	158553-51670	O-RING, PUMP TIMER	1							
67	3	119802-51680	RING, BACKUP	1							
68	3	119802-51690	O-RING, 1016	1							
69	3	24356-190200	O-RING, 4D19020	1							
70	3	24372-000150	RING, BACK UP T2P15	1							
72	2	119852-51630	SPRING, TIMER	1							
73	2	119852-51640	CAP, TIMER	1							
75	2	119852-51650	VALVE ASSY, SOLENOID	1							
78	2	158553-51680	GASKET, TIMER	1							
99	2	158601-51770	PISTON, ACCUMLATOR	1							
100	2	158552-51781	SPRING, ACCUMULATOR	1							
101	2	158601-51790	PLUG, ACCUMULATOR	1							
103	2	158553-51930	PLUG, M12	1							
104	2	22190-120002	WASHER, SEAL 12	1							
105	2	22190-180002	WASHER, SEAL 18	1							
109	2	158552-52311	O-RING, FEED PUMP	1							
110	2	158552-52400	O-RING, 4E S42	1							
111	2	22190-120002	WASHER, SEAL 12	2							
112	2	22217-180000	WASHER, SPRING 18	1							
113	2	22312-050140	PIN, PARALLEL 5X14	2							
114	2	22351-050010	PIN, SPRING 5.0X10	2							
115	2	24311-000070	O-RING, 1AP7.0	1							
116	2	24356-190200	O-RING, 4D19020	1							
117	2	24356-240210	O-RING, 4D24021	1							
118	2	26106-060102	BOLT, M6X 10 PLATED	1							
119	2	26106-060352	BOLT, M6X 35 PLATED	4							
120	2	26450-100452	BOLT, M10X 45	4							
121	2	26776-180002	NUT, LOCK M18	1							
124	2	129927-51650	HARNESS ASSY, WIRE	1							
125	3	129927-51660	HARNESS	1							
126	3	129263-77941	CAP, RUBBER	1							
127	2	158601-51650	JOINT, OVERFLOW	1							
128	2	129927-51670	BRACKET	1							
129	2	158552-51670	JOINT, OVERFLOW	1							

N:Old ←Yes/No→ New. Q:Old ←No/Yes→ New. R:Old ←Yes/Yes→ New. S:Old ←No/No→ New. W:Add. Z:Discontinued. F:Interchangeable by set. K:Q'ty Change

++ CONTINUE ++

Copyright (C) 2018 YANMAR GLOBAL CS CO., LTD. All RightsReserved.

Fig.11. FUEL INJECTION PUMP

(A)=4TNV94L-ZXSHYB
(B)=
(C)=
(D)=
(E)=
(F)=

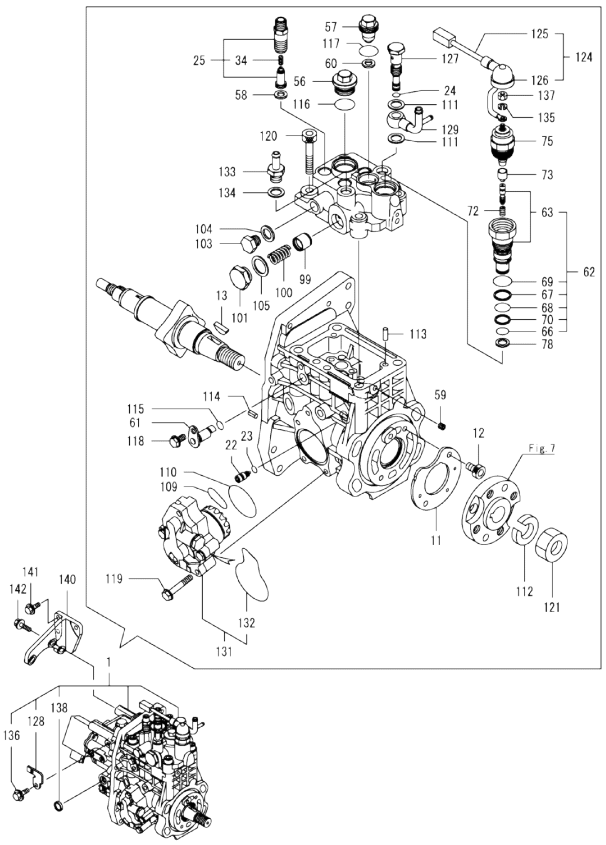

No.	Lev.	Parts No.	Description	Q'ty (A)	(B)	(C)	(D)	(E)	(F)	I	R
131	2	158552-52100	PUMP ASSY, FUEL FEED	1							
132	3	158552-52500	O-RING, PUMP INNER	1							
133	2	119934-59910	JOINT, PIPE	1							
134	2	22190-120002	WASHER, SEAL 12	1							
135	2	22217-050000	WASHER, SPRING 5	1							
136	2	26106-060122	BOLT, M6X 12 PLATED	1							
137	2	26716-050002	NUT, M5	1							
138	2	27241-160000	PLUG, 16	1							
140	1	129927-51250	RETAINER, FUEL PUMP	1							
141	1	26106-080202	BOLT, M8X 20 PLATED	3							
142	1	26106-080302	BOLT, M8X 30 PLATED	3							

Remarks
(1)Governor(Fig.12) is incorporated in this Fuel Injection Pump(No.1).
(1)Eco Pump
Make sure to update the engines ECU information when replacing the Eco pump.
Failing to do so will result in engine malfunction.

N:Old ←Yes/No→ New. Q:Old ←No/Yes→ New. R:Old ←Yes/Yes→ New. S:Old ←No/No→ New. W:Add. Z:Discontinued. F:Interchangeable by set. K:Q'ty Change

Copyright (C) 2018 YANMAR GLOBAL CS CO., LTD. All RightsReserved.

Fig.12. GOVERNOR

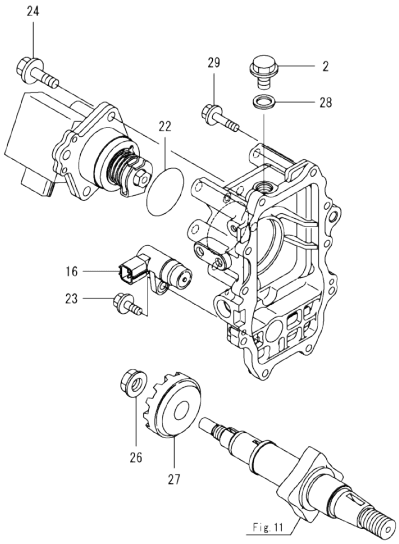

Remarks
* This figure(Governor) is incorporated in the Fuel Injection Pump(Fig.11).

(A)=4TNV94L-ZXSHYB (D)=
(B)= (E)=
(C)= (F)=

No.	Lev.	Parts No.	Description	Q'ty (A)	(B)	(C)	(D)	(E)	(F)	I	R
2	2	158553-51930	PLUG, M12	1							
16	2	158557-61720	SENSOR, ROTATION	1							
22	2	24341-000480	O-RING, 1AS48.0	1							
23	2	26106-060162	BOLT, M6X 16 PLATED	1							
24	2	26106-080252	BOLT, M8X 25 PLATED	3							
26	2	129008-61301	NUT, SUPPORT	1							
27	2	158553-61780	GEAR, SENSOR	1							
28	2	22190-120002	WASHER, SEAL 12	1							
29	2	26106-060252	BOLT, M6X 25 PLATED	10							

N:Old ◄Yes/No► New. Q:Old ◄No/Yes► New, R:Old ◄Yes/Yes► New, S:Old ◄No/No► New. W:Add. Z:Discontinued. F:Interchangeable by set. K:Q'ty Change

Copyright (C) 2018 YANMAR GLOBAL CS CO., LTD. All RightsReserved.

Fig.13. FUEL INJECTION VALVE

(A)=4TNV94L-ZXSHYB
(B)=
(C)=
(D)=
(E)=
(F)=

No.	Lev.	Parts No.	Description	Q'ty (A)	(B)	(C)	(D)	(E)	(F)	I	R
1	1	729906-53100	VALVE ASSY,INJECTION	4							
2	2	129906-53000	VALVE ASSY,INJECTION	4							
5	2	114250-53080	NUT, NOZZLE	4							
9	2	114250-53120	SPRING, NOZZLE	4							
10	2	114250-53130	SEAT, SPRING	4							
11	2	114250-53140	SPACER, VALVE STOP	4							
12	2	114250-53210	PIN, POSITIONING	8							
13	2	119803-53400	SHIM SET	4							1
40	1	123907-11601	SEAL, PIPE	4							
41	1	123472-59120	RETAINER, PIPE	2							
42	1	129150-59120	RETAINER, PIPE	1							
45	2	129150-59131	BOLT, M4X14	2							
47	1	129927-59810	PIPE ASSY, INJECTION	1							
48	1	129927-59820	PIPE ASSY, INJECTION	1							
49	1	129927-59830	PIPE ASSY, INJECTION	1							
50	1	129927-59840	PIPE ASSY, INJECTION	1							
51	1	26366-060002	NUT, M6	2							

Remarks
(1)Spare parts.

N:Old $\frac{\text{Yes}}{\text{No}}$ New. Q:Old $\frac{\text{No}}{\text{Yes}}$ New. R:Old $\frac{\text{Yes}}{\text{Yes}}$ New. S:Old $\frac{\text{No}}{\text{No}}$ New. W:Add. Z:Discontinued. F:Interchangeable by set. K:Q'ty Change

Copyright (C) 2018 YANMAR GLOBAL CS CO., LTD. All RightsReserved.

Fig.14. FUEL PIPE

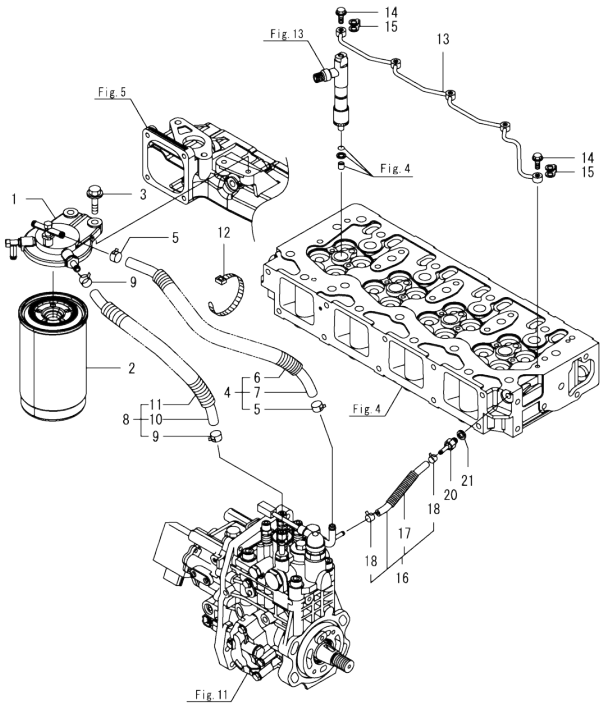

(A)=4TNV94L-ZXSHYB (D)=
(B)= (E)=
(C)= (F)=

No.	Lev.	Parts No.	Description	Q'ty (A)	(B)	(C)	(D)	(E)	(F)	I	R
1	1	129004-55612	BRACKET, FILTER	1							
2	1	129907-55801	FILTER, FUEL	1							
3	1	26106-080302	BOLT, M8X 30 PLATED	2							
4	1	129457-59010	HOSE ASSY, FUEL	1							
5	2	124766-59050	CLAMP, HOSE 11.5	2							
6	2	129957-59120	TUBE, CORRUGATED 15	1							
7	2	105025-59750	HOSE, FUEL	1							
8	1	129961-59310	HOSE ASSY, FUEL	1							
9	2	124766-59050	CLAMP, HOSE 11.5	2							
10	2	129136-59110	HOSE, D13/7.5X270	1							
11	2	129961-59110	TUBE, CORRUGATED 15	1							
12	1	121750-59890	BAND, NYLON	1							
13	1	129907-59140	PIPE ASSY, RETURN	1							
14	1	123907-59540	BOLT, PIPE JOINT M6	5							
15	1	123907-59550	GASKET, FUEL RETURN	5							
16	1	129927-59550	HOSE ASSY, RETURN	1							
17	2	129263-49750	TUBE, CORRUGATED	1							
18	2	124722-59050	CLAMP, HOSE 9	2							
20	1	123907-59560	JOINT, HOSE	1							
21	1	22190-080002	WASHER, SEAL 8	1							

N:Old ◄Yes/No► New. Q:Old ◄No/Yes► New. R:Old ◄Yes/Yes► New. S:Old ◄No/No► New. W:Add. Z:Discontinued. F:Interchangeable by set. K:Q'ty Change

Copyright (C) 2018 YANMAR GLOBAL CS CO., LTD. All RightsReserved.

Fig.15. STARTER MOTOR

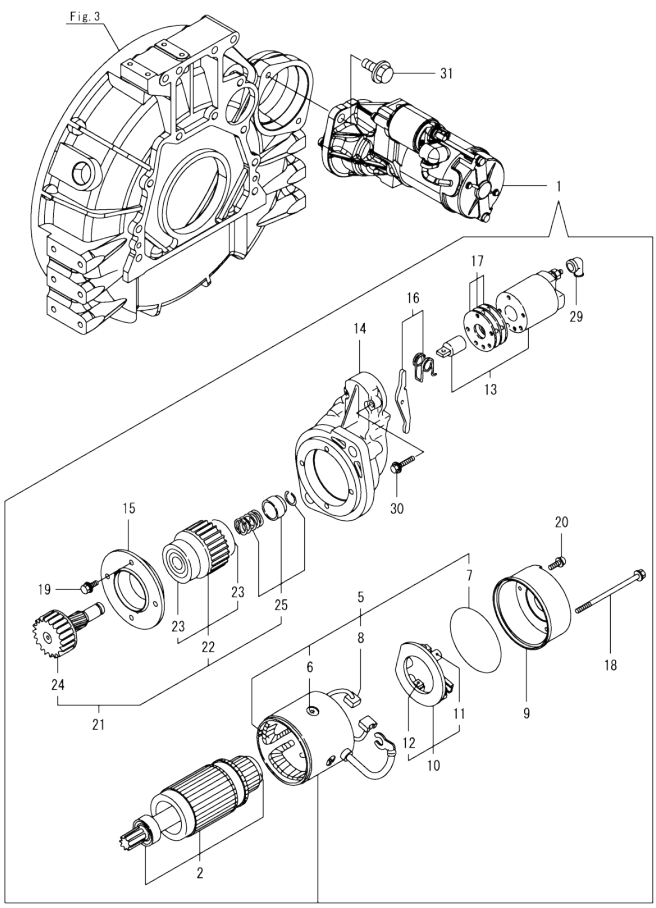

(A)=4TNV94L-ZXSHYB (D)=
(B)= (E)=
(C)= (F)=

No.	Lev.	Parts No.	Description	Q'ty (A)	(B)	(C)	(D)	(E)	(F)	I	R
1	1	129940-77011	STARTER, 12V.3KW	1							
2	2	129940-77100	ARMATURE ASSY	1							
5	2	129940-77130	COIL ASSY, FIELD	1							
6	3	129940-77140	SCREW, CORE SET	4							
7	3	129940-77150	O-RING	1							
8	3	129940-77160	BRUSH, +	2							
9	2	129940-77171	COVER, REAR	1							
10	2	129940-77181	HOLDER ASSY, BRUSH	1							
11	3	129940-77190	SPRING, BRUSH	1							
12	3	129940-77200	BRUSH, -	2							
13	2	129940-77210	SWITCH ASSY, MAGNET	1							
14	2	129940-77221	CASE, GEAR	1							
15	2	129940-77230	RETAINER, BEARING	1							
16	2	129940-77240	LEVER SET, SHIFT	1							
17	2	129940-77250	COVER KIT, DUST	1							
18	2	129940-77260	BOLT, THROUGH	2							
19	2	129940-77270	BOLT, M6X20	4							
20	2	129940-77280	SCREW, M4	2							
21	2	123900-77510	CLUTCH ASSY, PINION	1							
22	3	123900-77520	CLUTCH ASSY	1							
23	4	X2240610100	BEARING, BALL	2							
24	3	123900-77540	SHAFT, PINION	1							
25	3	119131-77550	STOPPER SET, PINION	1							
29	2	121254-77810	COVER, TERMINAL M	1							
30	2	114371-79070	BOLT, M6	2							
31	1	26106-120252	BOLT, M12X 25 PLATED	2							

N:Old ←Yes/No→ New. Q:Old ←No/Yes→ New. R:Old ←Yes/Yes→ New. S:Old ←No/No→ New. W:Add. Z:Discontinued. F:Interchangeable by set. K:Q'ty Change

Copyright (C) 2018 YANMAR GLOBAL CS CO., LTD. All RightsReserved.

Fig.16. ELECTRONIC CONTROL UNIT(ECU)

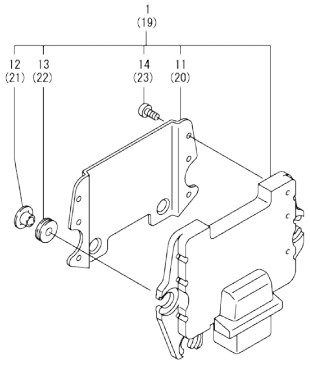

Remarks
(1)Eco ECU
This part cannot be ordered.
Replace the part using a Service ECU with the proper engine information installed.
(2)Service ECU
If the proper information is not installed, the engine will not operate.
To install proper information, go to an authorized distributor.

(A)=4TNV94L-ZXSHYB (D)=
(B)= (E)=
(C)= (F)=

No.	Lev.	Parts No.	Description	Q'ty (A)	(B)	(C)	(D)	(E)	(F)	I	R
1	1	129984-75040	ECU ASSY,94L-ZXSHYB	1							1
11	2	129927-77600	SHIELD, ECU	1							
12	2	129927-77680	COLLAR, CONTROLLER	3							
13	2	119578-91351	RUBBER, CONTROLLER	3							
14	2	22877-500080	SCREW, 5X 8	6							
19	1	129927-75901	ECU ASSY, SERVICE	1							2
20	2	129927-77600	SHIELD, ECU	1							
21	2	129927-77680	COLLAR, CONTROLLER	3							
22	2	119578-91351	RUBBER, CONTROLLER	3							
23	2	22877-500080	SCREW, 5X 8	6							

N:Old ◄Yes/No► New. Q:Old ◄No/Yes► New. R:Old ◄Yes/Yes► New. S:Old ◄No/No► New. W:Add. Z:Discontinued. F:Interchangeable by set. K:Q'ty Change

Copyright (C) 2018 YANMAR GLOBAL CS CO., LTD. All RightsReserved.

Fig.17. ACCESSORY

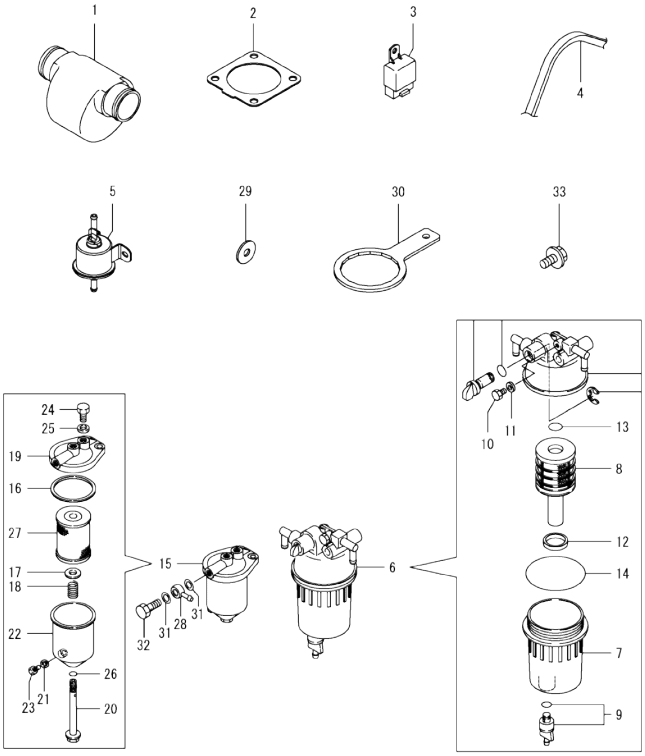

(A)=4TNV94L-ZXSHYB (D)=
(B)= (E)=
(C)= (F)=

No.	Lev.	Parts No.	Description	Q'ty (A)	(B)	(C)	(D)	(E)	(F)	I	R
1	1	119005-12060	SILENCER, INTAKE	1							
2	1	129930-13201	GASKET, SILENCER	1							
3	1	172B02-17150	RELAY, CA TYPE C	2							
4	1	129940-42240	V-BELT, B44	1							
5	1	129612-52100	PUMP, FUEL FEED	1							
6	1	129242-55711	SEPARATOR ASSY,WATER	1							
7	2	129242-55720	CUP, SEPARATOR	1							
8	2	129242-55730	ELEMENT, FUEL FILTER	1							
9	2	129242-55740	PLUG, DRAIN	1							
10	2	129242-55750	VALVE, AIR VENT	1							
11	2	129242-55760	GASKET, PLUG	1							
12	2	129242-55770	FLOAT	1							
13	2	24311-000160	O-RING, 1AP16.0	1							
14	2	24321-000750	O-RING, 1AG75.0	1							
15	1	129065-55750	SEPARATOR ASSY,WATER	1							
16	2	123325-35140	GASKET, COVER	1							
17	2	123325-35160	SEAT, SPRING	1							
18	2	129065-55170	SPRING, FILTER	1							
19	2	129495-55610	BODY, STRAINER	1							
20	2	129495-55620	BOLT, CENTER	1							
21	2	123672-55760	GASKET	1							
22	2	129065-55760	CASE, SEPARATOR	1							
23	2	129065-55770	PLUG, DRAIN M8	1							
24	2	129065-55800	PLUG, M14	1							
25	2	123678-55890	GASKET, PLUG	1							
26	2	24311-000120	O-RING, 1AP12.0	1							
27	2	41650-550800	ELEMENT, FUEL	1							
28	1	121855-59880	JOINT, FUEL PIPE	2							
29	1	129927-77690	WASHER, ECU	3							
30	1	119640-92750	TOOL, FILTER WRENCH	1							
31	1	22190-140002	WASHER, SEAL 14	4							
32	1	23857-080000	BOLT, JOINT 8	2							
33	1	26106-080252	BOLT, M8X 25 PLATED	3							

N:Old ←Yes/No→ New. Q:Old ←No/Yes→ New. R:Old ←Yes/Yes→ New. S:Old ←No/No→ New. W:Add. Z:Discontinued. F:Interchangeable by set. K:Q'ty Change

Copyright (C) 2018 YANMAR GLOBAL CS CO., LTD. All RightsReserved.

Fig.18. GASKET SET

(A)=4TNV94L-ZXSHYB
(B)=
(C)=
(D)=
(E)=
(F)=

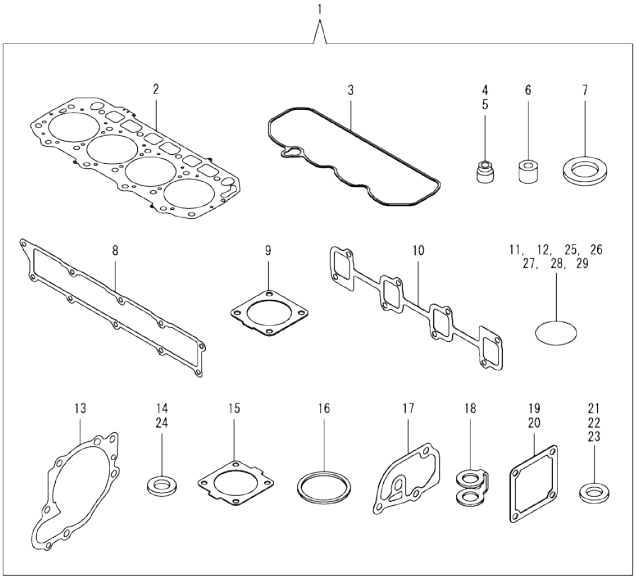

No.	Lev.	Parts No.	Description	Q'ty (A)	(B)	(C)	(D)	(E)	(F)	I	R
1	1	129932-92760	GASKET SET	1							1
2	2	129906-01350	GASKET, HEAD	1							
3	2	129933-11310	GASKET, BONNET	1							
4	2	119803-11340	SEAL, VALVE STEM	8							
5	2	124160-11340	SEAL, VALVE STEM	8							
6	2	119802-11870	PROTECTOR, NOZZLE	4							
7	2	119625-11880	SEAT, NOZZLE	4							
8	2	129907-12110	GASKET, MANIFOLD	1							
9	2	129930-13201	GASKET, SILENCER	1							
10	2	129900-13251	GASKET, MANIFOLD	1							
11	2	129900-32030	O-RING, P20	2							
12	2	129900-32040	O-RING, P14	1							
13	2	129900-42020	GASKET, WATER PUMP	1							
14	2	124465-44950	GASKET, 16	2							
15	2	121850-49540	GASKET, THERMOSTAT	1							
16	2	121850-49550	GASKET, THERMOSTAT	1							
17	2	129900-49870	GASKET, THERMOSTAT	1							
18	2	123907-59550	GASKET, FUEL RETURN	5							
19	2	119129-77020	GASKET, AIR HEATER	2							
20	2	121850-77021	GASKET, AIR HEATER	1							
21	2	22190-080002	WASHER, SEAL 8	7							
22	2	22190-120002	WASHER, SEAL 12	1							
23	2	22190-220002	WASHER, SEAL 22	1							
24	2	23414-080000	GASKET, 8X1.0	1							
25	2	24311-000070	O-RING, 1AP7.0	1							
26	2	24311-000120	O-RING, 1AP12.0	8							
27	2	24311-000320	O-RING, 1AP32.0	3							
28	2	24341-000530	O-RING, 1AS53.0	1							
29	2	24351-030750	O-RING, 1A3075	1							

Remarks
(1)Optional parts.

N:Old $\frac{\text{Yes}}{\text{No}}$ New. Q:Old $\frac{\text{No}}{\text{Yes}}$ New. R:Old $\frac{\text{Yes}}{\text{Yes}}$ New. S:Old $\frac{\text{No}}{\text{No}}$ New. W:Add. Z:Discontinued. F:Interchangeable by set. K:Q'ty Change

Copyright (C) 2018 YANMAR GLOBAL CS CO., LTD. All RightsReserved.

Parts No. Index

Parts No.	Fig. No.	Ref. No.
105025-59750	14	7
114250-53080	13	5
114250-53120	13	9
114250-53130	13	10
114250-53140	13	11
114250-53210	13	12
114371-79070	15	30
119000-35140	9	3
119005-12060	17	1
119005-35151	9	24
119005-77051	5	12
119129-77020	5	10
	18	19
119129-77520	5	13
119131-18320	6	5
119131-77550	15	25
119578-91351	16	13
		22
119593-11301	4	28
119620-01750	3	3
119620-11180	4	13
119625-11880	4	24
	18	7
119640-61400	4	60
119640-92750	17	30
119761-39450	9	12
119802-11870	4	23
	18	6
119802-51680	11	67
119802-51690	11	68
119803-11340	4	14
	18	4
119803-53400	13	13
119852-51630	11	72
119852-51640	11	73
119852-51650	11	75
119934-59910	11	133
120130-22301	8	23
121254-77810	15	29
121450-42450	10	30
121520-34810	9	1
121750-59890	14	12
121850-21130	8	11
121850-21290	8	4
121850-21920	8	5
121850-49540	10	19
	18	15
121850-49550	10	20
	18	16
121850-49801	10	21

Parts No.	Fig. No.	Ref. No.
121850-77021	5	11
	18	20
121855-59880	17	28
123325-35140	17	16
123325-35160	17	17
123472-59120	13	41
123672-55760	17	21
123678-55890	17	25
123900-13610	6	3
123900-25060	7	9
123900-77510	15	21
123900-77520	15	22
123900-77540	15	24
123907-03100	4	53
123907-03110	4	54
123907-03120	4	55
123907-03140	4	56
123907-11280	4	33
123907-11550	4	1
123907-11601	13	40
123907-11820	4	20
123907-11830	4	19
123907-39500	9	15
123907-59540	14	14
123907-59550	14	15
	18	18
123907-59560	14	20
124160-01751	2	43
	4	48
124160-11340	4	15
	18	5
124160-11360	4	63
124465-44950	10	31
	18	14
124722-59050	14	18
124766-59050	14	5
		9
129004-55612	14	1
129005-59830	9	17
129008-51920	11	12
129008-61301	12	26
129065-55170	17	18
129065-55750	17	15
129065-55760	17	22
129065-55770	17	23
129065-55800	17	24
129100-01580	2	5
	3	1
129136-59110	14	10
129150-02450	7	4

Parts No.	Fig. No.	Ref. No.
129150-11230	4	36
		40
129150-11750	4	18
		37
		41
129150-14200	7	1
129150-59120	13	42
129150-59131	13	45
129242-55711	17	6
129242-55720	17	7
129242-55730	17	8
129242-55740	17	9
129242-55750	17	10
129242-55760	17	11
129242-55770	17	12
129263-49750	14	17
129263-77941	11	126
129457-59010	14	4
129495-55610	17	19
129495-55620	17	20
129509-51390	11	25
129612-52100	17	5
129657-51590	11	62
129657-51600	11	63
129900-01200	1	27
129900-01250	1	4
129900-01850	2	45
129900-01870	2	46
129900-02020	1	6
129900-02410	1	9
129900-07900	4	67
129900-13200	6	1
129900-13251	6	2
	18	10
129900-14100	7	6
129900-21200	8	3
129900-21600	8	14
129900-23001	8	25
129900-23200	8	28
129900-23911	8	31
129900-32001	2	15
129900-32030	2	27
	9	5
	18	11
129900-32040	2	28
	18	12
129900-42003	10	1
129900-42020	10	10
	18	13
129900-49870	10	26

Parts No.	Fig. No.	Ref. No.
129900-49870	18	17
129902-21000	8	1
129906-01350	1	28
	18	2
129906-01640	3	8
129906-22050	8	17
129906-22090	8	15
129906-34851	9	2
129906-51580	11	60
129906-53000	13	2
129907-03011	4	50
129907-03061	4	51
129907-03070	4	52
129907-11100	4	10
129907-11110	4	11
129907-11120	4	12
129907-11250	4	30
129907-11260	4	31
129907-11270	4	32
129907-11321	4	49
129907-11341	4	29
129907-11510	4	16
129907-11650	4	34
129907-11660	4	38
129907-11700	4	2
129907-11800	4	66
129907-11920	4	42
129907-11950	4	26
129907-11960	4	25
129907-12110	5	1
	18	8
129907-14400	7	2
129907-25900	7	15
129907-51560	11	57
129907-55801	14	2
129907-59140	14	13
129916-01790	3	6
129916-01800	2	4
129916-21610	8	7
129916-21620	8	8
129916-49530	10	18
129916-77300	10	32
129927-02340	1	32
129927-02930	1	24
129927-02940	1	35
129927-12100	5	3
129927-13920	5	5
129927-23600	8	29
129927-23610	8	32
129927-25100	7	10

Parts No. Index

Parts No.	Fig. No.	Ref. No.
129927-25920	7	16
129927-39060	9	13
129927-42140	2	29
129927-44900	10	17
129927-51250	11	140
129927-51650	11	124
129927-51660	11	125
129927-51670	11	128
129927-59550	14	16
129927-59810	13	47
129927-59820	13	48
129927-59830	13	49
129927-59840	13	50
129927-75901	16	19
129927-77600	16	11
		20
129927-77680	16	12
		21
129927-77690	17	29
129928-42410	10	13
129928-51900	11	11
129930-13201	17	2
	18	9
129932-14580	7	3
129932-49800	10	16
129932-92760	18	1
129933-11310	4	59
	18	3
129940-01720	3	7
129940-12110	5	4
129940-12150	5	2
129940-42240	17	4
129940-77011	15	1
129940-77100	15	2
129940-77130	15	5
129940-77140	15	6
129940-77150	15	7
129940-77160	15	8
129940-77171	15	9
129940-77181	15	10
129940-77190	15	11
129940-77200	15	12
129940-77210	15	13
129940-77221	15	14
129940-77230	15	15
129940-77240	15	16
129940-77250	15	17
129940-77260	15	18
129940-77270	15	19
129940-77280	15	20

Parts No.	Fig. No.	Ref. No.
129944-01500	2	8
129951-01740	2	6
129953-21581	8	12
129953-25300	7	14
129953-35000	9	6
129957-59120	14	6
129960-21930	8	9
129960-21940	8	10
129961-59110	14	11
129961-59310	14	8
129981-01600	3	2
129984-75040	16	1
129E00-13640	6	4
144626-51090	11	13
158552-51571	11	58
158552-51580	11	61
158552-51670	11	129
158552-51781	11	100
158552-52100	11	131
158552-52311	11	109
158552-52400	11	110
158552-52500	11	132
158553-51670	11	66
158553-51680	11	78
158553-51930	11	103
	12	2
158553-61780	12	27
158557-51570	11	59
158557-61720	12	16
158563-51150	7	17
158563-51281	11	23
		24
158563-51330	11	34
158600-51270	11	22
158601-51550	11	56
158601-51650	11	127
158601-51770	11	99
158601-51790	11	101
171031-11741	2	41
171051-01921	1	5
171056-49120	10	14
172B02-17150	17	3
22190-080002	9	18
		20
		22
	14	21
	18	21
22190-120002	10	23
	11	104
		111

Parts No.	Fig. No.	Ref. No.
22190-120002	11	134
	12	28
	18	22
22190-140002	17	31
22190-180002	11	105
22190-220002	18	23
22217-050000	11	135
22217-180000	11	112
22252-000300	8	24
22312-050140	11	113
22351-050010	11	114
22351-060012	1	10
22512-070140	7	7
	8	6
22857-500100	4	61
		62
22877-500080	16	14
		23
23414-080000	10	27
	18	24
23857-030000	9	19
23857-080000	17	32
23875-030000	10	24
23876-020000	4	7
23876-030000	1	11
		12
		13
	4	8
24311-000070	2	30
	11	115
	18	25
24311-000120	4	27
		64
	17	26
	18	26
24311-000160	17	13
24311-000320	2	42
		44
	4	65
	18	27
24321-000750	17	14
24341-000480	12	22
24341-000530	18	28
24351-030750	2	31
	18	29
24356-190200	11	69
		116
24356-240210	11	117
24372-000150	11	70
26014-080252	10	33

Parts No.	Fig. No.	Ref. No.
26018-080162	10	15
26106-060102	11	118
26106-060122	11	136
26106-060162	12	23
26106-060202	10	25
26106-060252	12	29
26106-060302	10	11
26106-060352	11	119
26106-080122	3	10
	9	11
		21
		23
	10	28
26106-080142	7	8
26106-080162	2	32
		47
	4	68
26106-080202	2	33
		34
	11	141
26106-080252	12	24
	17	33
26106-080302	11	142
	14	3
26106-080402	2	35
	4	44
	5	14
26106-080452	2	36
		37
	5	8
26106-080552	7	13
	10	12
26106-080602	4	45
		46
	10	29
26106-080702	2	38
26106-080752	2	39
26106-080802	5	9
26106-080902	5	15
26106-100202	5	6
26106-120252	15	31
26206-100352	3	4
26206-100702	3	5
26216-060202	5	7
26216-100302	2	26
26226-080222	4	43
26306-080002	4	47
	6	6
26306-100002	2	40
26366-060002	13	51

Parts No. Index

Parts No.	Fig. No.	Ref. No.
26450-100452	11	120
26716-050002	11	137
26776-180002	11	121
27241-160000	11	138
27241-300000	1	14
27241-400000	4	9
27310-070001	4	21
41650-550800	17	27
729906-01561	1	1
729906-53100	13	1
729907-01559	2	1
729927-02800	1	29
729927-22950	8	36
729928-22900	8	34
729984-51300	11	1
X2240610100	15	23

Parts No.	Fig. No.	Ref. No.

Parts No.	Fig. No.	Ref. No.

Parts No.	Fig. No.	Ref. No.