YANMAR

PARTS CATALOG

0CD11-M11300EN

Last update May., 2013

PREFACE

1. This parts catalog is the 1st edition of 4TNV88-BDHKS for HOKUETSU INDUSTRIES CO.,LTD.

Pub.No. : 0CD11-G11300
Published : May, 2010

2. Model name

Engine model	Vehicle	Vehicle made by
4TNV88-BDHKS	ENGINE COMPRESSOR	HOKUETSU INDUSTRIES CO.,LTD.

Contents

0CD11-M11300

Fig. No.	Fig. Name
ENGINE	
1.	CYLINDER BLOCK
2.	GEAR HOUSING
3.	MOUNTING FLANGE & OIL SUMP
4.	CYLINDER HEAD & BONNET
5.	SUCTION MANIFOLD
6.	EXHAUST MANIFOLD
7.	CAMSHAFT & DRIVING GEAR
8.	CRANKSHAFT & PISTON
9.	LUB. OIL SYSTEM
10.	COOLING WATER SYSTEM
11.	FUEL INJECTION PUMP
12.	GOVERNOR
13.	FUEL INJECTION VALVE
14.	FUEL PIPE
15.	STARTER MOTOR(TO EE6304)
18.	(15A)STARTER MOTOR(FROM EE6305)
19.	(15B)STARTER MOTOR(FROM ES7222)
16.	GENERATOR
17.	GASKET SET

Fig.1. CYLINDER BLOCK

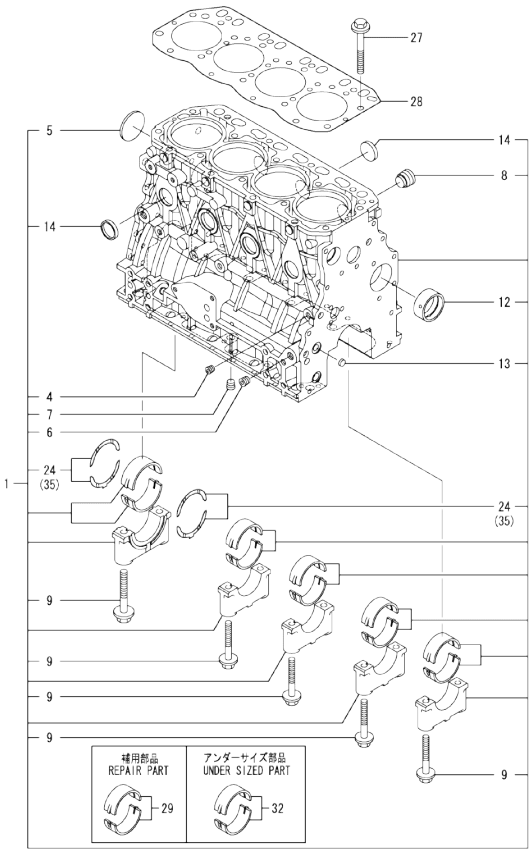

Remarks
(1)Spare parts.
(2)Under-sized(U.S.=0.25) parts.
(3)Over-sized(O.S.=0.25) parts.

(A)=4TNV88-BDHKS
(B)=
(C)=
(D)=
(E)=
(F)=

No.	Lev.	Parts No.	Description	Q'ty (A)	(B)	(C)	(D)	(E)	(F)	I	R
1	1	729602-01560	BLOCK ASSY, CYLINDER	1							
4	2	124060-01050	PLUG, PT1/8	1							
5	2	129001-01250	PLUG, DISH TYPE 50	1							
6	2	124160-01910	PLUG, PT1/4	2							
7	2	124160-01910	PLUG, PT1/4	1							
8	2	171051-01921	PLUG, NPTF1	1							
9	2	129150-02020	BOLT, METAL CAP	10							
12	2	129795-02412	BUSH, CAMSHAFT	1							
13	2	27241-120000	PLUG, 12	2							
14	2	27241-300000	PLUG 30	8							
24	2	129150-02931	BEARING ASSY, THRUST	2							
27	1	129150-01200	BOLT, CYLINDER HEAD	18							
28	1	129407-01340	GASKET, HEAD	1							
29	1	129001-02931	BEARING ASSY, MAIN	5							1
32	1	129150-02871	BEARING ASSY, MAIN	5							2
35	1	129150-02941	BEARING, THRUST 0.25	1							3

N:Old ←Yes/No→ New. Q:Old ←No/Yes→ New. R:Old ←Yes/Yes→ New. S:Old ←No/No→ New. W:Add. Z:Discontinued. F:Interchangeable by set. K:Q'ty Change

Copyright (C) YANMAR GLOBAL CS CO., LTD. All RightsReserved.

Fig.2. GEAR HOUSING

(A)=4TNV88-BDHKS
(B)=
(C)=
(D)=
(E)=
(F)=

No.	Lev.	Parts No.	Description	Q'ty (A)	(B)	(C)	(D)	(E)	(F)	I	R
1	1	719803-01500	CASE ASSY, GEAR	1							
3	2	119934-01800	SEAL, OIL	1							
4	1	119803-01520	FLANGE, GEAR CASE	1							
5	1	119802-01561	BOLT, STUD M8X25	3							
6	1	124160-01751	CAP, FILLER	1							
7	1	124240-01871	COVER, PUMP	1							
8	1	129795-01950	PIPE, DOWEL L=18	2							
9	1	119609-32040	O-RING, P16	2							
10	1	121850-51960	O-RING	1							
11	1	22190-080002	WASHER, SEAL 6	5							
12	1	24311-000320	O-RING, 1AP32.0	1							
13	1	26106-080162	BOLT, M8X 16 PLATED	3							
14	1	26106-080162	BOLT, M8X 16 PLATED	4							
15	1	26106-080302	BOLT, M8X 30 PLATED	1							
16	1	26106-080552	BOLT, M8X 55 PLATED	12							
17	1	26106-080852	BOLT, M8X 85 PLATED	3							
18	1	26306-080002	NUT, M8	3							
19	1	121023-01551	COVER	1							
20	1	24341-000240	O-RING, 1AS24.0	1							
21	1	26106-060162	BOLT, M6X 16 PLATED	2							
22	1	171031-11741	PIPE	1							
23	1	24311-000320	O-RING, 1AP32.0	1							

N:Old ◄Yes/No► New. Q:Old ◄No/Yes► New. R:Old ◄Yes/Yes► New. S:Old ◄No/No► New. W:Add. Z:Discontinued. F:Interchangeable by set. K:Q'ty Change

Copyright (C) YANMAR GLOBAL CS CO., LTD. All RightsReserved.

Fig.3. MOUNTING FLANGE & OIL SUMP

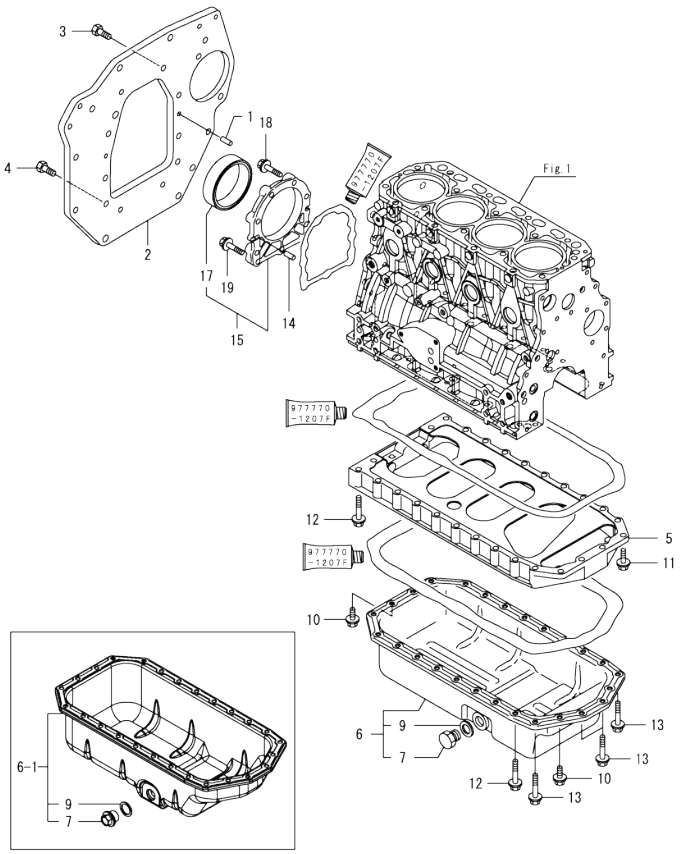

(A)=4TNV88-BDHKS (D)=
(B)= (E)=
(C)= (F)=

No.	Lev.	Parts No.	Description	Q'ty (A)	(B)	(C)	(D)	(E)	(F)	I	R
1	1	129100-01580	PIN, PARALLEL 8X16	2							
2	1	129129-01600	FLANGE, MOUNTING	1							
3	1	26206-100202	BOLT, M10X 20 PLATED	6							
4	1	26206-100252	BOLT, M10X 25 PLATED	2							
5	1	129400-01730	SPACER, OIL-PAN	1							
6	1	129400-01770	OIL PAN ASSY	1							
6-1	1	129688-01780	OIL PAN ASSY, DEEP	1						N	
	(A=EZZZZZ)										
7	2	119640-01640	PLUG, DRAIN M22	1							
9	2	22190-220002	WASHER, SEAL 22	1							
10	1	26106-080162	BOLT, M8X 16 PLATED	4							
11	1	26106-080252	BOLT, M8X 25 PLATED	2							
12	1	26106-080452	BOLT, M8X 45 PLATED	20							
13	1	26106-080502	BOLT, M8X 50 PLATED	4							
14	1	129100-01580	PIN, PARALLEL 8X16	2							
15	1	129648-01600	CASE ASSY, OIL SEAL	1							
17	2	129648-01780	SEAL, OIL	1							
18	1	129486-01670	BOLT, M8X30	6							
19	1	26106-080352	BOLT, M8X 35 PLATED	3							

N:Old ←Yes/No→ New. Q:Old ←No/Yes→ New. R:Old ←Yes/Yes→ New. S:Old ←No/No→ New. W:Add. Z:Discontinued. F:Interchangeable by set. K:Q'ty Change

Copyright (C) YANMAR GLOBAL CS CO., LTD. All RightsReserved.

Fig.4. CYLINDER HEAD & BONNET

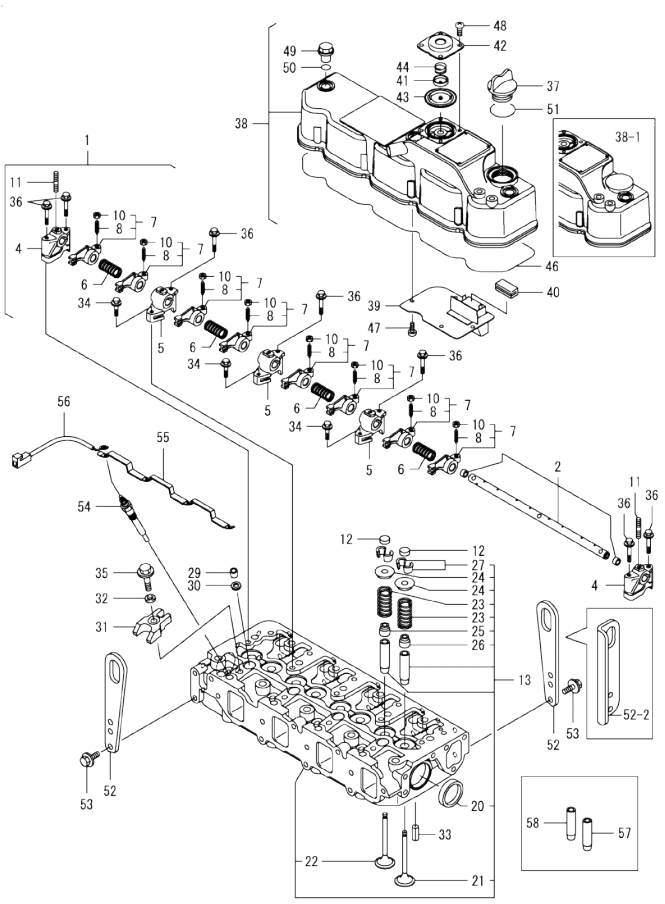

Remarks
(1)Spare parts.

(A)=4TNV88-BDHKS (D)=
(B)= (E)=
(C)= (F)=

No.	Lev.	Parts No.	Description	Q'ty (A)	(B)	(C)	(D)	(E)	(F)	I	R
1	1	129601-11241	SHAFT ASSY, ROCKER	1							
2	2	129601-11251	SHAFT, ROCKER ARM	1							
4	2	119802-11260	SUPPORT, ROCKER ARM	2							
5	2	119802-11270	SUPPORT, ROCKER ARM	3							
6	2	129150-11280	SPRING, ROCKER	4							
7	2	129004-11650	ARM ASSY, ROCKER	8							
8	3	129150-11230	SCREW, VALVE ADJUST	8							
10	3	129150-11750	NUT, M8	8							
11	2	26226-080182	STUD, M8X 18	3							
12	1	129150-11370	CAP, VALVE	8							
13	1	129688-11700	HEAD ASSY, CYLINDER	1							
20	2	27241-400000	PLUG, 40	2							
21	2	129005-11100	VALVE, SUCTION	4							
22	2	129100-11112	VALVE, EXHAUST	4							
23	2	129795-11120	SPRING, VALVE	8							
24	2	129795-11180	RETAINER, SPRING	8							
25	2	121400-11340	SEAL, VALVE STEM	4							
26	2	124460-11340	SEAL, VALVE STEM	4							
27	2	27310-080001	COTTER, 8	8							
29	1	119802-11870	PROTECTOR, NOZZLE	4							
30	1	119625-11880	SEAT, NOZZLE	4							
31	1	129004-11900	RETAINER, NOZZLE	4							
32	1	120270-54410	WASHER, INJECTOR	4							
33	1	22351-060012	PIN, SPRING 6.0X12	2							
34	1	26106-080252	BOLT, M8X 25 PLATED	3							
35	1	26106-080352	BOLT, M8X 35 PLATED	4							
36	1	26106-080502	BOLT, M8X 50 PLATED	7							
37	1	124160-01751	CAP, FILLER	1							Z
	(A=EM9954)										
38	1	129601-11350	BONNET ASSY, HEAD	1							
38-1	1	129652-11350	BONNET ASSY, HEAD	1							N
	(A=EM9954)										
39	2	129004-03010	PLATE, BAFFLE	1							
40	2	129150-03070	BAFFLE, BREATHER	1							
41	2	119802-03110	PLATE, DIAPHRAGM	1							
42	2	119802-03121	COVER, DIAPHRAGM	1							
43	2	119802-03130	DIAPHRAGM	1							
44	2	119802-03141	SPRING, DIAPHRAGM	1							
46	2	129601-11310	GASKET, BONNET	1							
47	2	22857-500100	SCREW, 5X10	4							
48	2	22857-500100	SCREW, 5X10	4							
49	1	124160-11360	KNOB	3							
50	1	24311-000120	O-RING, 1AP12.0	3							
51	1	24311-000320	O-RING, 1AP32.0	1							Z
	(A=EM9954)										
52	1	129900-07900	LIFTER, ENGINE	2							
52-1	1	129900-07900	LIFTER, ENGINE	1							K
	(A=*2020.02.)										
52-2	1	129688-07900	LIFTER, ENGINE	1							N
	(A=*2020.02.)										
53	1	26106-080162	BOLT, M8X 16 PLATED	4							

N:Old ←Yes/No→ New. Q:Old ←No/Yes→ New. R:Old ←Yes/Yes→ New. S:Old ←No/No→ New. W:Add. Z:Discontinued. F:Interchangeable by set. K:Q'ty Change

++ CONTINUE ++

Copyright (C) YANMAR GLOBAL CS CO., LTD. All RightsReserved.

Fig.4. CYLINDER HEAD & BONNET

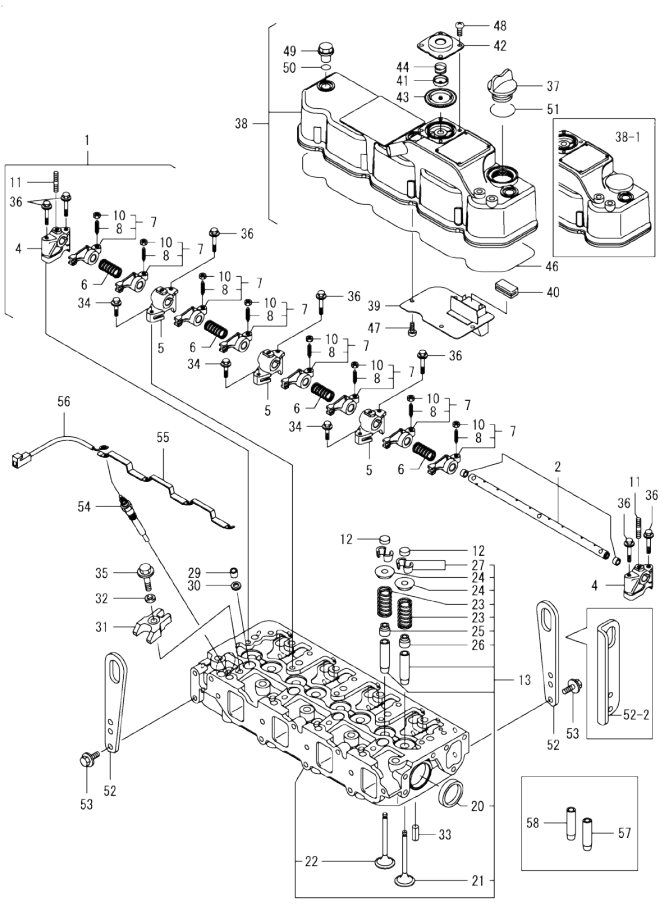

(A)=4TNV88-BDHKS
(B)=
(C)=
(D)=
(E)=
(F)=

No.	Lev.	Parts No.	Description	Q'ty (A)	(B)	(C)	(D)	(E)	(F)	I	R
54	1	129008-77800	PLUG, GLOW	4							
55	1	129604-77821	CONNECTOR, GLOW PLUG	1							
56	1	129630-77800	HARNESS, WIRE	1							
57	1	120130-11860	GUIDE, VALVE	4							1
58	1	129150-11810	GUIDE, VALVE	4							1

Remarks
(1)Spare parts.

N:Old ←Yes/No→ New. Q:Old ←No/Yes→ New. R:Old ←Yes/Yes→ New. S:Old ←No/No→ New. W:Add. Z:Discontinued. F:Interchangeable by set. K:Q'ty Change

Copyright (C) YANMAR GLOBAL CS CO., LTD. All RightsReserved.

Fig.5. SUCTION MANIFOLD

(A)=4TNV88-BDHKS
(B)=
(C)=
(D)=
(E)=
(F)=

No.	Lev.	Parts No.	Description	Q'ty (A)	(B)	(C)	(D)	(E)	(F)	I	R
1	1	129005-03080	HOSE ASSY, BREATHER	1							
2	2	129410-03990	CLAMP, HOSE 21.5	2							
3	1	129602-12101	MANIFOLD, AIR INTAKE	1							
4	1	129407-12110	GASKET, MANIFOLD	1							
5	1	26106-080202	BOLT, M8X 20 PLATED	6							
6	1	26106-080802	BOLT, M8X 80 PLATED	1							
7	1	129486-12581	JOINT, MANIFOLD	1							
8	1	129150-77511	GASKET, AIR HEATER	1							
8-1	1	129100-77510	GASKET, AIR HEATER	1						N	
	(A=EJ1850)										
8-2	1	129150-77511	GASKET, AIR HEATER	1						N	
	(A=EXXXXX)										
9	1	26106-080202	BOLT, M8X 20 PLATED	4							
9-1	1	26106-080252	BOLT, M8X 25 PLATED	4						N	
	(A=EJ1850)										
10	1	129688-59160	BRACKET, F.I. PIPE	1						W	1
	(A=EJ1850)										

Remarks
(1)Interchangeable by simultaneous replacement with Ref.No.10 and Fig.13 Ref.No.79.

N:Old ←Yes/No→ New. Q:Old ←No/Yes→ New. R:Old ←Yes/Yes→ New. S:Old ←No/No→ New. W:Add. Z:Discontinued. F:Interchangeable by set. K:Q'ty Change

Copyright (C) YANMAR GLOBAL CS CO., LTD. All RightsReserved.

Fig.6. EXHAUST MANIFOLD

(A)=4TNV88-BDHKS
(B)=
(C)=
(D)=
(E)=
(F)=

No.	Lev.	Parts No.	Description	Q'ty (A)	(B)	(C)	(D)	(E)	(F)	I	R
1	1	129411-13100	MANIFOLD, EXHAUST	1							
2	1	129550-13110	GASKET, EXH.MANIFOLD	1							
3	1	123900-13610	BOLT, STUD M8X80	2							
4	1	123900-13630	BOLT, M8X80	6							
5	1	119131-18320	BOLT, STUD M8X22	4							
6	1	26306-080002	NUT, M8	2							
7	1	129930-13201	GASKET, SILENCER	1							

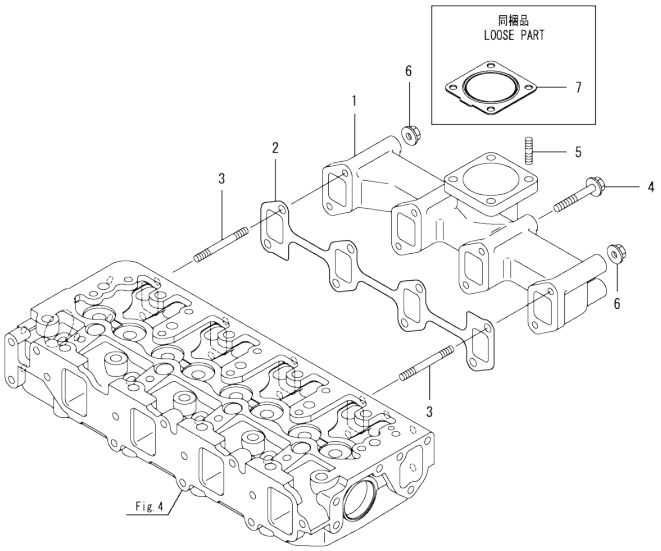

N:Old ◄Yes/No► New. Q:Old ◄No/Yes► New. R:Old ◄Yes/Yes► New. S:Old ◄No/No► New. W:Add. Z:Discontinued. F:Interchangeable by set. K:Q'ty Change

Copyright (C) YANMAR GLOBAL CS CO., LTD. All RightsReserved.

Fig.7. CAMSHAFT & DRIVING GEAR

(A)=4TNV88-BDHKS
(B)=
(C)=
(D)=
(E)=
(F)=

No.	Lev.	Parts No.	Description	Q'ty (A)	(B)	(C)	(D)	(E)	(F)	I	R
1	1	129150-14200	TAPPET	8							
2	1	129150-14400	PUSH-ROD, L=178	8							
3	1	729402-14580	CAMSHAFT ASSY	1							
4	2	129150-02450	BEARING, THRUST	1							
6	2	129150-14101	GEAR, CAMSHAFT	1							
7	2	22512-070140	KEY, 7X 14	1							
8	1	26106-080142	BOLT, M8X 14 PLATED	2							
9	1	119803-25050	SHAFT, IDLE	1							
10	1	119802-25101	GEAR ASSY, IDLE	1							
13	1	26106-080402	BOLT, M8X 40 PLATED	3							
14	1	129150-25301	BOLT	4							
15	1	119802-25901	GEAR, PUMP	1							
16	1	119802-25071	BUSH, IDLE GEAR	1							1

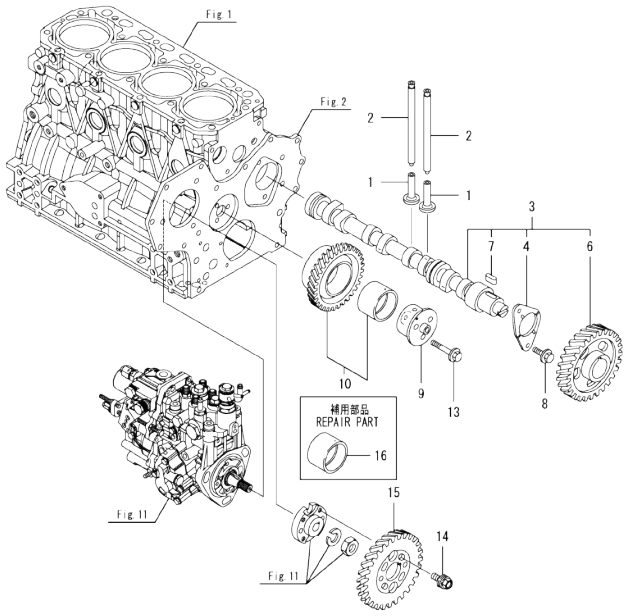

Remarks
(1)Spare parts.

N:Old ←Yes/No→ New. Q:Old ←No/Yes→ New. R:Old ←Yes/Yes→ New. S:Old ←No/No→ New. W:Add. Z:Discontinued. F:Interchangeable by set. K:Q'ty Change

Copyright (C) YANMAR GLOBAL CS CO., LTD. All RightsReserved.

Fig.8. CRANKSHAFT & PISTON

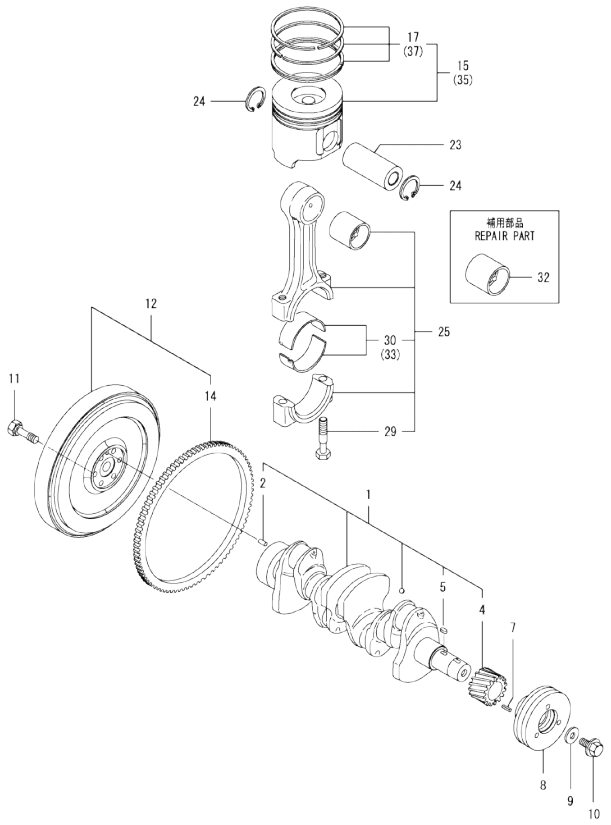

(A)=4TNV88-BDHKS (D)=
(B)= (E)=
(C)= (F)=

No.	Lev.	Parts No.	Description	Q'ty (A)	(B)	(C)	(D)	(E)	(F)	I	R
1	1	129604-21000	CRANKSHAFT ASSY	1							
2	2	129100-01580	PIN, PARALLEL 8X16	1							
4	2	119803-21200	GEAR, CRANKSHAFT	1							
5	2	22512-070140	KEY, 7X 14	1							
7	1	22351-030010	PIN, SPRING 3.0X10	1							
8	1	119802-21660	V-PULLEY, CRANK 120	1							
8-1	1	119802-21650	V-PULLEY, CRANKSHAFT	1						N	
	(A=ED9860)										
9	1	129795-21661	WASHER	1							
10	1	121850-21680	BOLT	1							
11	1	121111-21501	BOLT, FLYWHEEL	6							
12	1	171420-21580	FLYWHEEL ASSY	1							
14	2	119865-21600	GEAR, RING Z=116	1							
15	1	129005-22080	PISTON ASSY	4							
17	2	129005-22500	RING SET, PISTON	4							
23	1	129202-22300	PIN, PISTON D26 L70	4							
24	1	22252-000260	RING, 26	8							
25	1	729402-23100	ROD ASSY, CONNECTING	4							
29	2	121550-23200	BOLT, CONNECTING ROD	8							
30	2	129150-23601	BEARING, CRANK PIN	4							
32	1	129100-23910	BEARING, PISTON PIN	4							1
33	1	129150-23611	BEARING, 0.25 US	4							2
35	1	129005-22900	PISTON ASSY, 0.25 OS	4							3
37	2	129005-22950	RING SET, 0.25 OS	4							3

Remarks
(1)Spare parts.
(2)Under-sized(U.S.=0.25) parts.
(3)Over-sized(O.S.=0.25) parts.

N:Old ←Yes/No→ New. Q:Old ←No/Yes→ New. R:Old ←Yes/Yes→ New. S:Old ←No/No→ New. W:Add. Z:Discontinued. F:Interchangeable by set. K:Q'ty Change

Copyright (C) YANMAR GLOBAL CS CO., LTD. All RightsReserved.

Fig.9. LUB. OIL SYSTEM

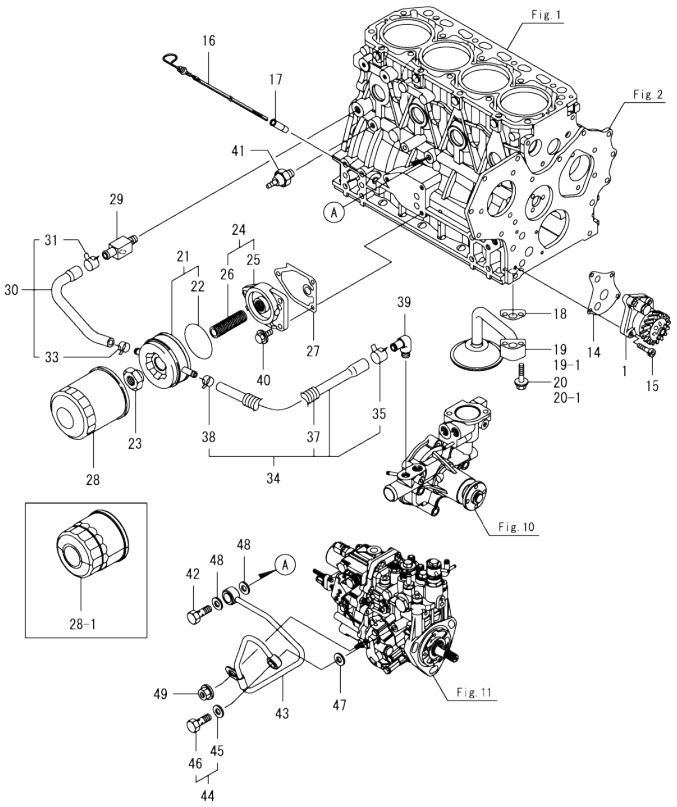

(A)=4TNV88-BDHKS (D)=
(B)= (E)=
(C)= (F)=

No.	Lev.	Parts No.	Description	Q'ty (A)	(B)	(C)	(D)	(E)	(F)	I	R
1	1	129407-32000	PUMP ASSY, OIL	1							
14	1	129150-32020	GASKET, PUMP	1							
15	1	26450-060252	BOLT, M6X 25	4							
16	1	129004-34802	DIPSTICK	1							
17	1	121520-34810	GUIDE, DIPSTICK	1							
18	1	129150-35042	GASKET	1							
19	1	129436-35091	PIPE ASSY, OIL INLET	1							
19-1	1	129436-35070	PIPE ASSY, OIL INLET	1						S	
	(A=EF5157)										
20	1	26106-080352	BOLT, M8X 35 PLATED	2							
20-1	1	26106-080552	BOLT, M8X 55 PLATED	2						S	
	(A=EF5157)										
21	1	129508-33010	COOLER ASSY, OIL	1							
22	2	129508-33050	O-RING	1							
23	1	129417-33110	NUT	1							
24	1	129006-35100	BRACKET ASSY, FILTER	1							
25	2	119802-35110	BRACKET, FILTER	1							
26	2	129417-35150	BOLT, STUD M20X67	1							
27	1	129150-35111	GASKET	1							
28	1	119005-35151	FILTER, D80X100	1							
28-1	1	129150-35153	FILTER ASSY, D80X80L	1						N	
	(A=EM9954)										
29	1	129006-44480	JOINT	1							
30	1	129508-49030	HOSE ASSY, WATER	1							
31	2	171008-03990	CLAMP, HOSE 18.5	1							
33	2	23080-015000	CLAMP, 15	1							
34	1	129508-49040	HOSE ASSY, WATER	1							
35	2	171008-03990	CLAMP, HOSE 18.5	1							
37	2	119940-59130	TUBE, CORRUGATED 19	1							
38	2	23080-015000	CLAMP, 15	1							
39	1	129103-49301	ELBOW, PT1/4	1							
40	1	26106-080202	BOLT, M8X 20 PLATED	3							
41	1	114250-39450	SWITCH, HYDRAULIC	1							
42	1	124160-39140	BOLT, PIPE JOINT M10	1							
43	1	119802-39450	PIPE ASSY, OIL	1							
44	1	129005-59830	BOLT ASSY, JOINT M8	1							
45	2	22190-080002	WASHER, SEAL 6	1							
46	2	23857-030000	BOLT, JOINT 3	1							
47	1	22190-080002	WASHER, SEAL 6	1							
48	1	22190-100002	WASHER, SEAL 10	2							
49	1	26366-060002	NUT, M6	1							

N:Old ←Yes/No→ New. Q:Old ←No/Yes→ New. R:Old ←Yes/Yes→ New. S:Old ←No/No→ New. W:Add. Z:Discontinued. F:Interchangeable by set. K:Q'ty Change

Copyright (C) YANMAR GLOBAL CS CO., LTD. All RightsReserved.

Fig.10. COOLING WATER SYSTEM

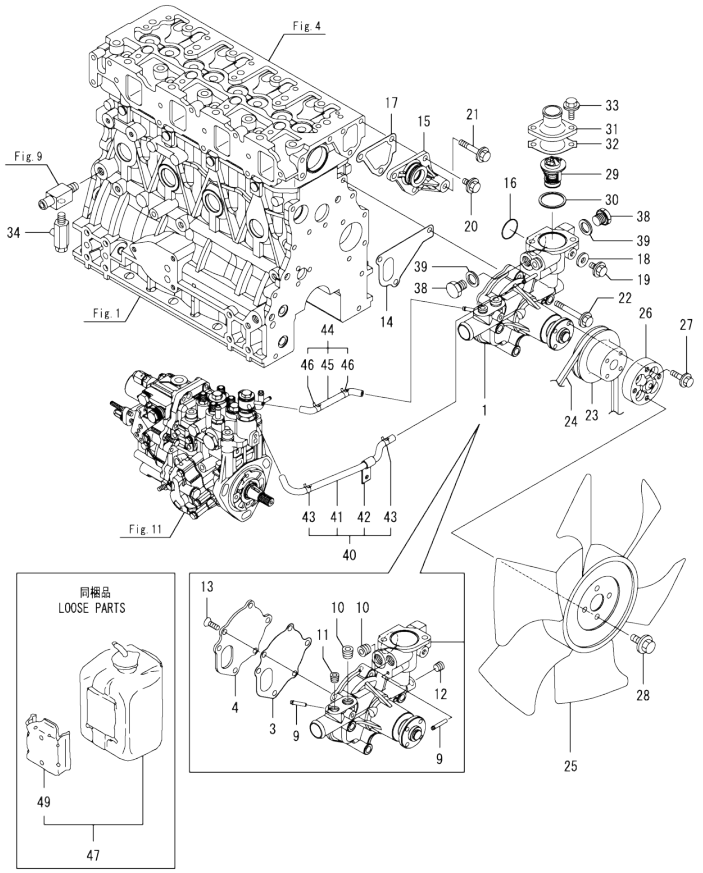

(A)=4TNV88-BDHKS (D)=
(B)= (E)=
(C)= (F)=

No.	Lev.	Parts No.	Description	Q'ty (A)	(B)	(C)	(D)	(E)	(F)	I	R
1	1	129004-42001	PUMP ASSY, WATER	1							
3	2	129100-42051	GASKET, WATER PUMP	1							
4	2	129100-42121	PLATE, PUMP	1							
9	2	119802-49113	JOINT, PIPE	2							
10	2	129916-49740	PLUG, R3/8	2							
11	2	23875-020000	PLUG, R02	1							
12	2	23876-010000	PLUG, R01	1							
13	2	26577-060142	SCREW M 6X 14	3							
14	1	129486-42021	GASKET, WATER PUMP	1							
15	1	129004-42040	JOINT	1							
16	1	129486-42140	O-RING, G30	1							
17	1	124395-49840	GASKET, THERMOSTAT	1							
18	1	23414-080000	GASKET, 8X1.0	1							
19	1	26106-080122	BOLT, M8X 12 PLATED	1							
20	1	26106-080162	BOLT, M8X 16 PLATED	3							
21	1	26106-080452	BOLT, M8X 45 PLATED	1							
22	1	26106-080602	BOLT, M8X 60 PLATED	3							
23	1	129403-42380	V-PULLEY, D=110	1							
23-1	1	129550-42350	V-PULLEY, PUMP	1						N	
	(A=ED9860)										
24	1	129612-42350	V-BELT, A38	1							
25	1	129916-44740	FAN, COOLING D=430	1							
26	1	129648-44770	SPACER, FAN	1							
27	1	26106-060222	BOLT, M6X 22 PLATED	4							
28	1	26106-080162	BOLT, M8X 16 PLATED	4							
29	1	129155-49801	THERMOSTAT, 71C	1							
30	1	129150-49811	GASKET, THERMOSTAT	1							
31	1	129350-49530	COVER, THERMOSTAT	1							
32	1	129795-49551	GASKET	1							
33	1	26106-080222	BOLT, M8X 22 PLATED	2							
34	1	119620-49290	COCK ASSY, 1/4	1							
38	1	121450-42450	PLUG, M16	2							
39	1	124465-44950	GASKET, 16	2							
40	1	129004-49610	HOSE ASSY, WATER	1							
41	2	129004-49711	HOSE, WATER	1							
42	2	119802-49730	RETAINER, PIPE	1							
43	2	124722-59050	CLAMP, HOSE 9	2							
44	1	129004-49620	HOSE ASSY, WATER	1							
45	2	129004-49721	HOSE, WATER	1							
46	2	124722-59050	CLAMP, HOSE 9	2							
47	1	720445-44200	TANK ASSY, SUB	1							
49	2	120445-44540	SUPPORT	1							

N:Old ←Yes/No→ New. Q:Old ←No/Yes→ New. R:Old ←Yes/Yes→ New. S:Old ←No/No→ New. W:Add. Z:Discontinued. F:Interchangeable by set. K:Q'ty Change

Copyright (C) YANMAR GLOBAL CS CO., LTD. All RightsReserved.

Fig.11. FUEL INJECTION PUMP

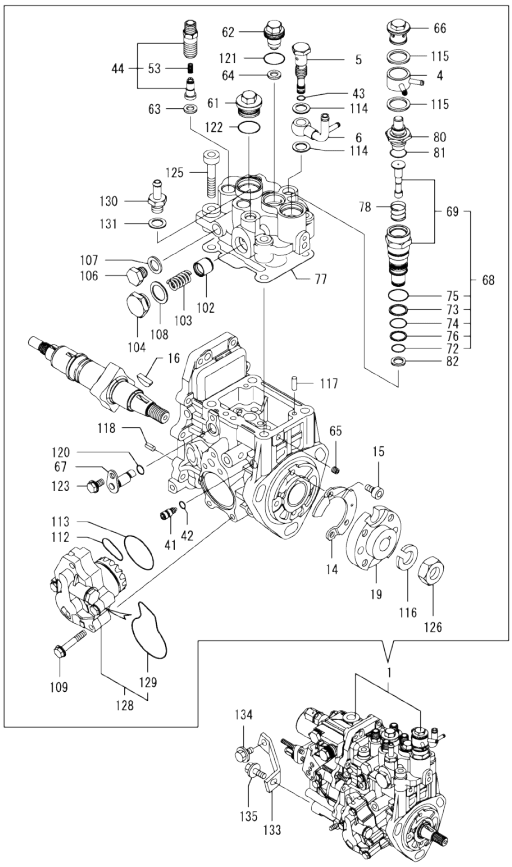

Remarks
(1)Governor(Fig.12) is incorporated in this Fuel Injection Pump(No.1).

(A)=4TNV88-BDHKS (D)=
(B)= (E)=
(C)= (F)=

No.	Lev.	Parts No.	Description	Q'ty (A)	(B)	(C)	(D)	(E)	(F)	I	R
1	1	729688-51350	INJECTION PUMP ASSY	1							1
4	2	158553-51551	JOINT, COOLING WATER	1							
5	2	158601-51650	JOINT, OVER FLOW	1							
6	2	158552-51670	JOINT, OVER FLOW	1							
14	2	129008-51900	COVER, PUMP	1							
15	2	129008-51920	BOLT, SOCKET M6X10	2							
16	2	119802-51090	FEATHER KEY, 4X16	1							
19	2	158552-51151	FLANGE	1							
41	2	158600-51270	STOPPER, TAPPET	1							
42	2	158563-51281	O-RING, 4D S6	1							
43	2	158563-51281	O-RING, 4D S6	1							
44	2	129008-51390	VALVE ASSY, DELIVERY	4							
53	3	158563-51330	SPRING, DELIVERY	4							
61	2	158601-51550	PLUG, M22	1							
62	2	119802-51560	PLUG, M14	1							
63	2	158552-51571	GASKET, PLUG	3							
64	2	158552-51571	GASKET, PLUG	1							
65	2	158557-51570	PLUG, RACK	1							
66	2	158601-51570	PLUG	1							
67	2	158552-51580	LIFTER, LINK	1							
68	2	119802-51590	TIMER ASSY	1							
69	3	119802-51600	TIMER ASSY	1							
72	3	158553-51670	O-RING	1							
73	3	119802-51680	RING, BACKUP	1							
74	3	119802-51690	O-RING	1							
75	3	24356-190200	O-RING, 4D19020	1							
76	3	24372-000150	RING, BACK UP T2P15	1							
77	2	158552-51600	GASKET	1							
78	2	158553-51630	SPRING, TIMER	1							
80	2	158553-51650	THERMOELEMENT	1							
81	2	158553-51660	O-RING, P14	1							
82	2	158553-51680	GASKET, TIMER	1							
102	2	158601-51770	PISTON, ACCUMLATOR	1							
103	2	158552-51781	SPRING, ACCUMULATOR	1							
104	2	158601-51790	PLUG	1							
106	2	158553-51930	PLUG, M12	1							
107	2	22190-120002	WASHER, SEAL 12	1							
108	2	22190-180002	WASHER, SEAL 18	1							
109	2	158553-51770	BOLT	4							
112	2	158552-52311	O-RING	1							
113	2	158552-52400	O-RING, 4E S42	1							
114	2	22190-120002	WASHER, SEAL 12	2							
115	2	22190-180002	WASHER, SEAL 18	2							
116	2	22217-140000	WASHER, SPRING 14	1							
117	2	22312-050140	PIN, PARALLEL M5X14	2							
118	2	22351-050010	PIN, SPRING 5.0X10	2							
120	2	24311-000070	O-RING, 1AP7.0	1							
121	2	24356-190180	O-RING, 4D19018	1							
122	2	24356-190200	O-RING, 4D19020	1							
123	2	26106-060102	BOLT, M6X 10 PLATED	1							
125	2	26450-080452	BOLT, M8X 45	4							

N:Old ←Yes/No→ New. Q:Old ←No/Yes→ New. R:Old ←Yes/Yes→ New. S:Old ←No/No→ New. W:Add. Z:Discontinued. F:Interchangeable by set. K:Q'ty Change

++ CONTINUE ++

Copyright (C) YANMAR GLOBAL CS CO., LTD. All RightsReserved.

Fig.11. FUEL INJECTION PUMP

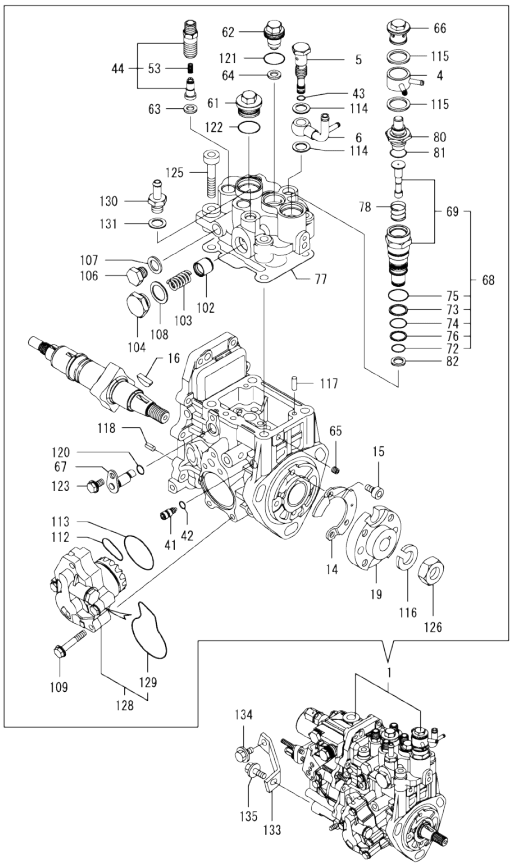

Remarks
(1)Governor(Fig.12) is incorporated in this Fuel Injection Pump(No.1).

(A)=4TNV88-BDHKS
(B)=
(C)=
(D)=
(E)=
(F)=

No.	Lev.	Parts No.	Description	Q'ty (A)	(B)	(C)	(D)	(E)	(F)	I	R
126	2	26776-140002	NUT, LOCK M14	1							
128	2	158552-52100	PUMP ASSY, FUEL FEED	1							
129	3	158552-52500	O-RING	1							
130	2	119934-59910	JOINT, PIPE	1							
131	2	22190-120002	WASHER, SEAL 12	1							
133	1	129601-51250	RETAINER, PUMP	1							
134	1	26106-080162	BOLT, M8X 16 PLATED	1							
135	1	26106-080202	BOLT, M8X 20 PLATED	1							

N:Old ←Yes/No→ New. Q:Old ←No/Yes→ New. R:Old ←Yes/Yes→ New. S:Old ←No/No→ New. W:Add. Z:Discontinued. F:Interchangeable by set. K:Q'ty Change

Copyright (C) YANMAR GLOBAL CS CO., LTD. All RightsReserved.

Fig.12. GOVERNOR

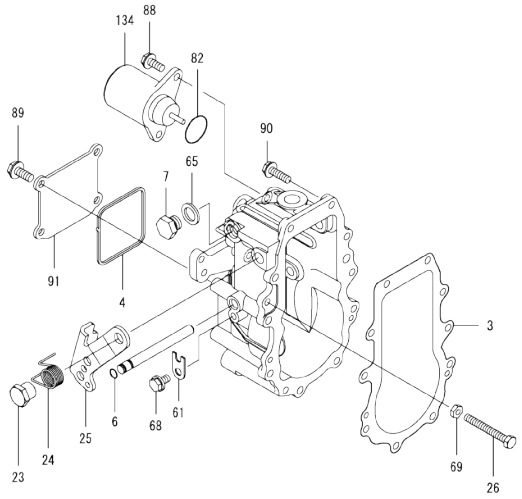

(A)=4TNV88-BDHKS (D)=
(B)= (E)=
(C)= (F)=

No.	Lev.	Parts No.	Description	Q'ty (A)	(B)	(C)	(D)	(E)	(F)	I	R
3	2	158553-61050	GASKET	1							
4	2	158553-61070	GASKET	1							
6	2	129155-51280	O-RING, S6	1							
7	2	158553-51930	PLUG, M12	1							
23	2	129255-61410	NUT, M8	1							
24	2	119807-61420	SPRING, RETURN	1							
25	2	158552-61441	LEVER, REGULATOR	1							
26	2	129155-61460	BOLT, LIMITING	1							
61	2	119660-61901	STOPPER, SHAFT	1							
65	2	22190-120002	WASHER, SEAL 12	1							
68	2	26106-060102	BOLT, M6X 10 PLATED	1							
69	2	26756-060002	NUT, LOCK M6	1							
82	2	158552-61900	O-RING	1							
88	2	26106-060142	BOLT, M6X 14 PLATED	2							
89	2	26106-060142	BOLT, M6X 14 PLATED	4							
90	2	26106-060202	BOLT, M6X 20 PLATED	10							
91	2	129642-61060	COVER, GOVERNOR CASE	1							
134	2	119233-77932	SOLENOID, STOP	1							

Remarks
* This figure(Governor) is incorporated in the Fuel Injection Pump(Fig.11).

N:Old ◄Yes/No► New. Q:Old ◄No/Yes► New. R:Old ◄Yes/Yes► New. S:Old ◄No/No► New. W:Add. Z:Discontinued. F:Interchangeable by set. K:Q'ty Change

Copyright (C) YANMAR GLOBAL CS CO., LTD. All RightsReserved.

Fig.13. FUEL INJECTION VALVE

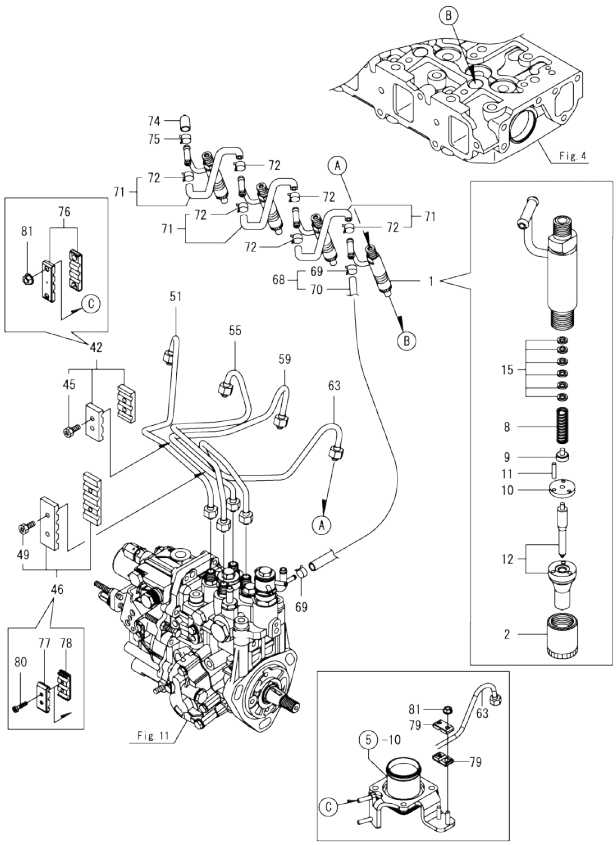

0CD11-M11300 Fig.13

(A)=4TNV88-BDHKS (D)=
(B)= (E)=
(C)= (F)=

No.	Lev.	Parts No.	Description	Q'ty (A)	(B)	(C)	(D)	(E)	(F)	I	R
1	1	729604-53400	VALVE ASSY,INJECTION	4							
2	2	114250-53080	NUT, NOZZLE	4							
8	2	114250-53120	SPRING, NOZZLE	4							
9	2	114250-53130	SEAT, SPRING	4							
10	2	114250-53140	SPACER	4							
11	2	114250-53210	PIN	8							
12	2	129604-53300	NOZZLE ASSY, F.I.	4							
15	2	119803-53400	SHIM SET	4							
42	1	129150-59120	RETAINER, PIPE	1						Z	
	(A=EJ1850)										
45	2	129150-59131	BOLT, M4X14	2						Z	
	(A=EJ1850)										
46	1	129550-59120	RETAINER, PIPE	1						Z	
	(A=EJ1850)										
49	2	129150-59131	BOLT, M4X14	2						Z	
	(A=EJ1850)										
51	1	129601-59810	PIPE ASSY, INJECTION	1							
55	1	129601-59820	PIPE ASSY, INJECTION	1							
59	1	129601-59830	PIPE ASSY, INJECTION	1							
63	1	129601-59840	PIPE ASSY, INJECTION	1							
68	1	119802-59550	HOSE ASSY, RETURN	1							
69	2	124722-59050	CLAMP, HOSE 9	2							
70	2	119802-59560	HOSE, FUEL RETURN	1							
71	1	129486-59551	HOSE ASSY, RETURN	3							
72	2	124722-59050	CLAMP, HOSE 9	6							
74	1	119593-59581	CAP	1							
75	1	124060-77680	CLAMP, HOSE 10	1							
76	1	129688-59100	CLAMP, FO PIPE	2						W	
	(A=EJ1850)										
77	1	129688-59110	CLAMP, FO PIPE	1						W	
	(A=EJ1850)										
78	1	129688-59120	CLAMP, FO PIPE	1						W	
	(A=EJ1850)										
79	1	129688-59130	CLAMP, FO PIPE	2						W	1
	(A=EJ1850)										
80	1	129688-59150	BOLT, HB4X18	2						W	
	(A=EJ1850)										
81	1	26366-060002	NUT, M6	4						W	
	(A=EJ1850)										

Remarks
(1)Interchangeable by simultaneous replacement with ReNo.79 and Fig.5 Ref.No.10.

N:Old ←Yes/No→ New. Q:Old ←No/Yes→ New. R:Old ←Yes/Yes→ New. S:Old ←No/No→ New. W:Add. Z:Discontinued. F:Interchangeable by set. K:Q'ty Change

Copyright (C) YANMAR GLOBAL CS CO., LTD. All RightsReserved.

Fig.14. FUEL PIPE

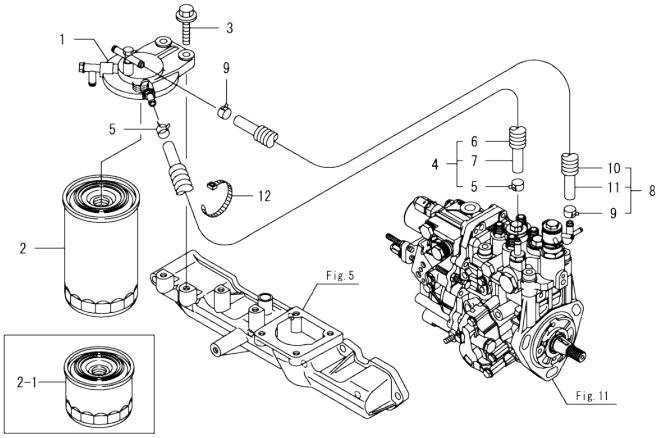

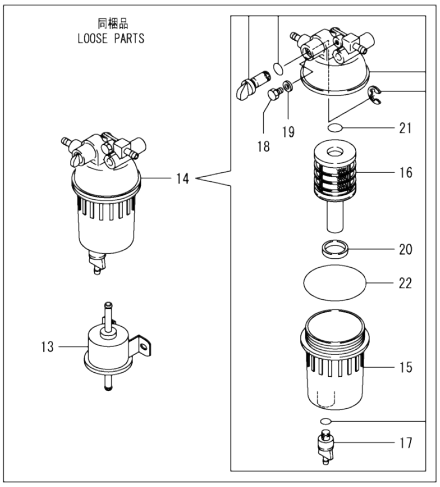

(A)=4TNV88-BDHKS (D)=
(B)= (E)=
(C)= (F)=

No.	Lev.	Parts No.	Description	Q'ty (A)	(B)	(C)	(D)	(E)	(F)	I	R
1	1	129004-55612	BRACKET, FILTER	1							
2	1	129907-55801	FILTER, FUEL	1							
2-1	1	119802-55801	FILTER, FUEL	1						N	
	(A=EM9954)										
3	1	26106-080302	BOLT, M8X 30 PLATED	2							
4	1	129630-59010	HOSE ASSY, FUEL	1							
5	2	124766-59050	CLAMP, HOSE 11.5	2							
6	2	129961-59110	TUBE, CORRUGATED 15	1							
7	2	105025-59560	HOSE, FUEL	1							
8	1	129956-59010	HOSE ASSY, FUEL	1							
9	2	124766-59050	CLAMP, HOSE 11.5	2							
10	2	129957-59101	TUBE, CORRUGATED 15	1							
11	2	105225-59511	HOSE, FUEL	1							
12	1	121750-59890	BAND, NYLON	1							
13	1	129612-52100	PUMP, FUEL FEED	1							
14	1	129242-55700	SEPARATOR ASSY,WATER	1							
14-1	1	129242-55701	SEPARATOR ASSY,WATER	1						N	
	(A=EE2405)										
14-2	1	129268-55701	SEPARATOR ASSY	1						N	
	(A=ES5567)										
15	2	129242-55720	CUP, SEPARATOR	1							
16	2	129242-55730	ELEMENT, FUEL	1							
17	2	129242-55740	PLUG, DRAIN	1							
18	2	129242-55750	VALVE, AIR VENT	1							
19	2	129242-55760	GASKET, PLUG	1							
20	2	129242-55770	FLOAT	1							
21	2	24311-000160	O-RING, 1AP16.0	1							
22	2	24321-000750	O-RING, 1AG75.0	1							

N:Old ←Yes/No→ New. Q:Old ←No/Yes→ New. R:Old ←Yes/Yes→ New. S:Old ←No/No→ New. W:Add. Z:Discontinued. F:Interchangeable by set. K:Q'ty Change

Copyright (C) YANMAR GLOBAL CS CO., LTD. All RightsReserved.

Fig.15. STARTER MOTOR(TO EE6304)

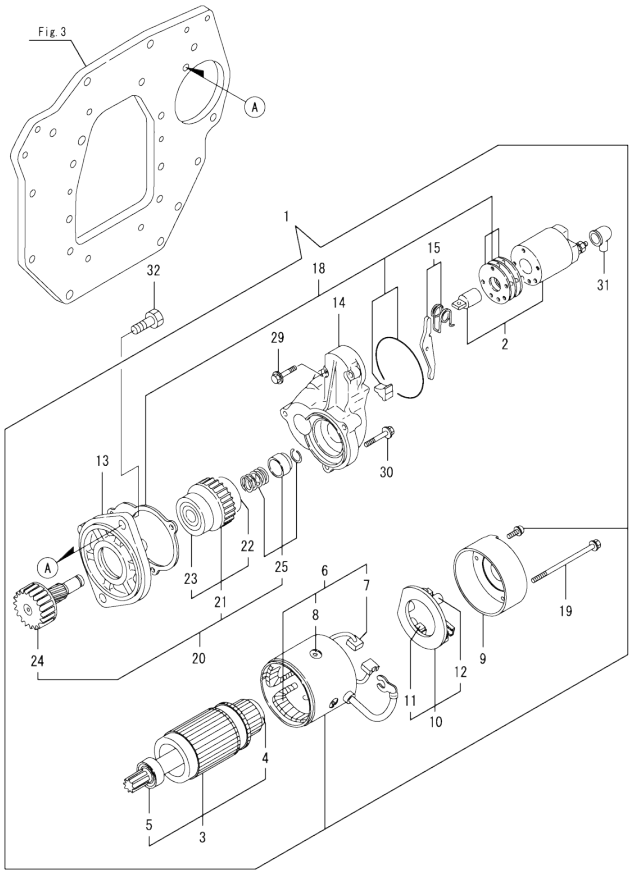

(A)=4TNV88-BDHKS (D)=
(B)= (E)=
(C)= (F)=

No.	Lev.	Parts No.	Description	Q'ty (A)	(B)	(C)	(D)	(E)	(F)	I	R
1	1	129136-77011	STARTER ASSY	1							
2	2	129136-77310	SWITCH ASSY	1							
3	2	129900-77400	ARMATURE ASSY	1							
4	3	X2130350900	BEARING, BALL	1							
5	3	X2114255110	BEARING, BALL	1							
6	2	129900-77440	COIL ASSY, FIELD	1							
7	3	129900-77450	BRUSH	2							
8	3	171008-77450	SCREW, CORE SET	4							
9	2	129900-77460	COVER	1							
10	2	129900-77480	HOLDER ASSY, BRUSH	1							
11	3	129900-77450	BRUSH	2							
12	3	129400-77490	SPRING, BRUSH	4							
13	2	171008-77510	CASE, GEAR	1							
14	2	129136-77520	HOUSING, STARTOR	1							
15	2	171008-77540	LEVER SET	1							
18	2	129400-77571	COVER KIT, DUST	1							
19	2	129900-77640	BOLT, THROUGH	2							
20	2	171008-77650	PINION ASSY,W/CLUTCH	1							
21	3	X2114555500	CLUTCH ASSY	1							
22	4	X2114955020	BEARING, BALL	1							
23	4	X2240410100	BEARING, BALL	1							
24	3	171008-77660	SHAFT, PINION	1							
25	3	171008-77670	STOPPER SET, PINION	1							
29	2	26106-060322	BOLT, M6X 32 PLATED	2							
30	2	26106-060402	BOLT, M6X 40 PLATED	3							
31	2	171008-77750	COVER, TERMINAL	1							
32	1	26116-120202	BOLT, M12X 20 PLATED	2							

N:Old ←Yes/No→ New. Q:Old ←No/Yes→ New. R:Old ←Yes/Yes→ New. S:Old ←No/No→ New. W:Add. Z:Discontinued. F:Interchangeable by set. K:Q'ty Change

Copyright (C) YANMAR GLOBAL CS CO., LTD. All RightsReserved.

Fig.18. (15A)STARTER MOTOR(FROM EE6305)

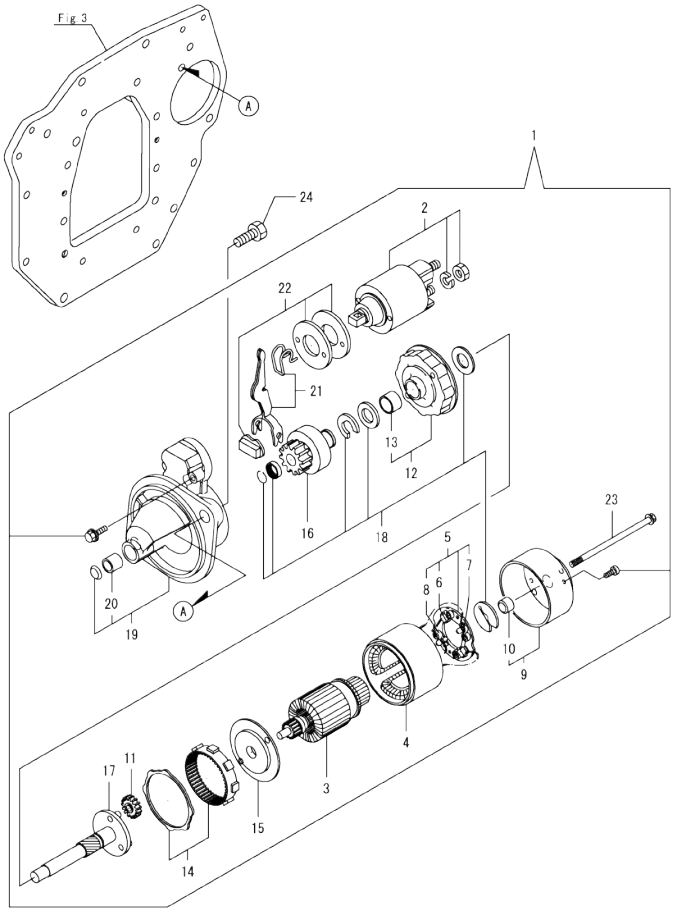

(A)=4TNV88-BDHKS (D)=
(B)= (E)=
(C)= (F)=

No.	Lev.	Parts No.	Description	Q'ty (A)	(B)	(C)	(D)	(E)	(F)	I	R
1	1 (A=EE6305)	129242-77010	STARTER ASSY	1							
2	2	129698-77020	SWITCH ASSY, MAGNET	1							
3	2	129242-77100	ARMATURE ASSY	1							
4	2	129242-77110	YOKE ASSY	1							
5	2	129242-77120	HOLDER ASSY, BRUSH	1							
6	3	129242-77130	BRUSH	2							
7	3	129242-77140	BRUSH SET	1							
8	3	129242-77150	SPRING, BRUSH	4							
9	2	129242-77160	COVER ASSY	1							
10	3	129242-77170	BEARING, COVER	1							
11	2	118400-77170	GEAR, PLANETARY	3							
12	2	129242-77180	BRACKET, CENTER	1							
13	3	129698-77190	BRACKET, CENTER	1							
14	2	129698-77200	GEAR, INTERNAL	1							
15	2	129242-77210	BRACKET, CENTER	1							
16	2	129698-77220	PINION ASSY	1							
17	2	129698-77230	SHAFT, PINION	1							
18	2	129698-77250	WASHER SET	1							
19	2	129242-77260	CASE ASSY, GEAR	1							
20	3	X2114535200	BEARING, STARTER	1							
21	2	129242-77270	LEVER SET	1							
22	2	129242-77280	COVER KIT, DUST	1							
23	2	124195-77770	BOLT, THROUGH	2							
24	1	26116-120202	BOLT, M12X 20 PLATED	2							

N:Old ←Yes/No→ New. Q:Old ←No/Yes→ New. R:Old ←Yes/Yes→ New. S:Old ←No/No→ New. W:Add. Z:Discontinued. F:Interchangeable by set. K:Q'ty Change

Copyright (C) YANMAR GLOBAL CS CO., LTD. All RightsReserved.

Fig.19. (15B)STARTER MOTOR(FROM ES7222)

(A)=4TNV88-BDHKS
(B)=
(C)=
(D)=
(E)=
(F)=

No.	Lev.	Parts No.	Description	Q'ty (A)	(B)	(C)	(D)	(E)	(F)	I	R
1	1 (A=ES7222)	129136-77011	STARTER	1							
2	2	129136-77310	SWITCH ASSY, MAGNET	1							
3	2	129900-77400	ARMATURE ASSY	1							
4	3	X2130350900	BEARING, BALL	1							
5	3	X2114255110	BEARING, BALL	1							
6	2	129900-77440	COIL ASSY, FIELD	1							
7	3	129900-77450	BRUSH, +	2							
8	3	171008-77450	SCREW, CORE SET	4							
9	2	129900-77460	COVER, REAR	1							
10	2	129900-77480	HOLDER ASSY, BRUSH	1							
11	3	129900-77500	BRUSH	2							
12	3	129400-77490	SPRING, BRUSH	4							
13	2	171008-77510	CASE, GEAR	1							
14	2	129136-77520	HOUSING, STARTOR	1							
15	2	171008-77540	LEVER SET, SHIFT	1							
18	2	129400-77571	COVER KIT, DUST	1							
19	2	129900-77640	BOLT, THROUGH	2							
20	2	171008-77650	PINION ASSY,W/CLUTCH	1							
21	3	X2114555500	CLUTCH ASSY	1							
22	4	X2114955020	BEARING, BALL	1							
23	4	X2240410100	BEARING, BALL	1							
24	3	171008-77660	SHAFT, PINION	1							
25	3	171008-77670	STOPPER SET, PINION	1							
29	2	26106-060322	BOLT, M6X 32 PLATED	2							
30	2	26106-060402	BOLT, M6X 40 PLATED	3							
31	2	171008-77750	COVER, TERMINAL	1							
32	1	26106-120252	BOLT, M12X 25 PLATED	2							

N:Old ◄Yes/No► New. Q:Old ◄No/Yes► New. R:Old ◄Yes/Yes► New. S:Old ◄No/No► New. W:Add. Z:Discontinued. F:Interchangeable by set. K:Q'ty Change

Copyright (C) YANMAR GLOBAL CS CO., LTD. All RightsReserved.

Fig.16. GENERATOR

(A)=4TNV88-BDHKS
(B)=
(C)=
(D)=
(E)=
(F)=

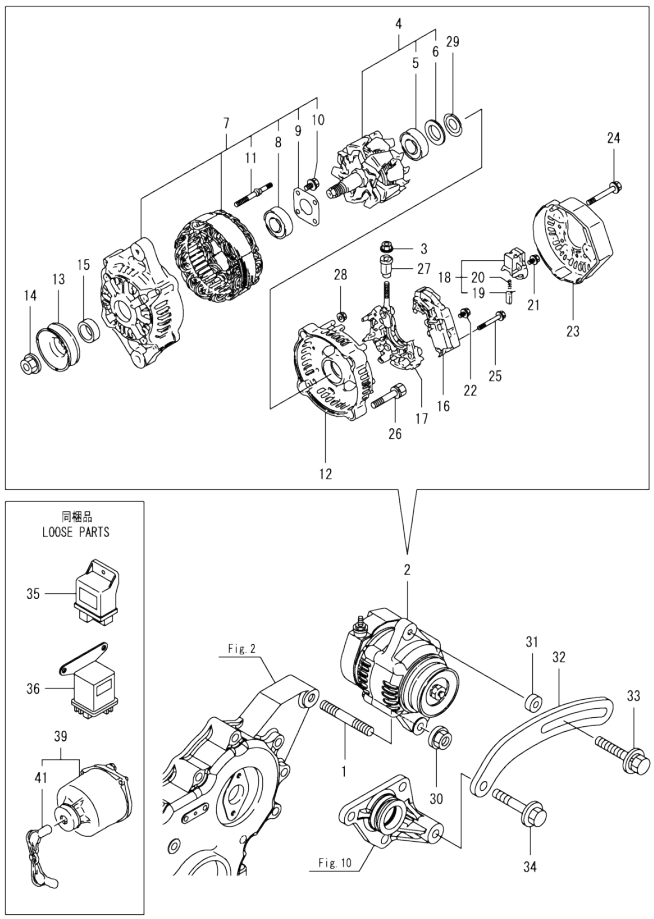

No.	Lev.	Parts No.	Description	Q'ty (A)	(B)	(C)	(D)	(E)	(F)	I	R
1	1	129795-01900	BOLT, STUD M10X33	1							
2	1	129423-77200	GENERATOR ASSY, 40A	1							
3	2	X9490561001	NUT	1							
4	2	119620-77380	ROTOR ASSY	1							
5	3	123501-79240	BEARING, BALL	1							
6	3	119620-79250	COVER, BEARING	1							
7	2	119620-77421	FRAME ASSY,GENERATOR	1							
8	3	119620-79200	BEARING, BALL	1							
9	3	119620-79210	RETAINER	1							
10	3	119620-79220	SCREW	4							
11	3	119620-79230	BOLT, STUD	2							
12	2	119620-77440	FRAME ASSY	1							
13	2	119620-77461	PULLEY, GENERATOR	1							
14	2	119620-77471	NUT	1							
15	2	119620-77490	COLLAR	1							
16	2	129423-77710	REGULATOR ASSY	1							
17	2	119620-79260	HOLDER	1							
18	2	129052-79270	HOLDER, BRUSH	1							
19	3	119620-77480	BRUSH	2							
20	3	119620-79280	SPRING	2							
21	2	119620-79290	SCREW	6							
22	2	119620-79300	SCREW	1							
23	2	129240-79300	COVER	1							
24	2	119620-79310	BOLT	3							
25	2	119620-79320	SCREW	2							
26	2	119620-79330	BOLT	2							
27	2	119620-79340	BUSH, INSULATION	1							
28	2	119620-79350	NUT	2							
29	2	119620-79360	WASHER, THRUST	1							
30	1	26306-100002	NUT, M10	1							
31	1	119940-77270	SPACER	1							
32	1	119802-77330	ADJUSTER, BELT	1							
33	1	129972-77341	BOLT, ADJUST L=50	1							
34	1	26106-080452	BOLT, M8X 45 PLATED	1							
35	1	119802-77200	RELAY, SAFETY	1							
36	1	119650-77910	RELAY ASSY, GLOW	2							
39	1	129115-91250	SWITCH ASSY, STARTER	1							
41	2	129115-91270	KEY	1							

N:Old ←Yes/No→ New. Q:Old ←No/Yes→ New. R:Old ←Yes/Yes→ New. S:Old ←No/No→ New. W:Add. Z:Discontinued. F:Interchangeable by set. K:Q'ty Change

Copyright (C) YANMAR GLOBAL CS CO., LTD. All RightsReserved.

Fig.17. GASKET SET

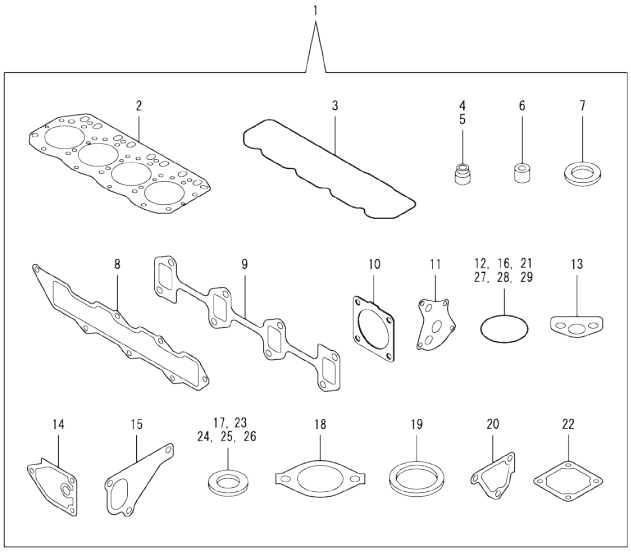

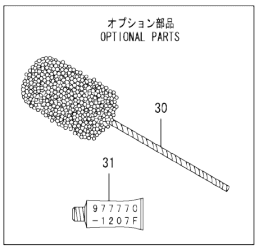

(A)=4TNV88-BDHKS (D)=
(B)= (E)=
(C)= (F)=

No.	Lev.	Parts No.	Description	Q'ty (A)	(B)	(C)	(D)	(E)	(F)	I	R
1	1	129688-92600	GASKET SET	1							1
2	2	129407-01340	GASKET, HEAD	1							
3	2	129601-11310	GASKET, BONNET	1							
4	2	121400-11340	SEAL, VALVE STEM	4							
5	2	124460-11340	SEAL, VALVE STEM	4							
6	2	119802-11870	PROTECTOR, NOZZLE	4							
7	2	119625-11880	SEAT, NOZZLE	4							
8	2	129407-12110	GASKET, MANIFOLD	1							
9	2	129550-13110	GASKET, EXH.MANIFOLD	1							
10	2	129930-13201	GASKET, SILENCER	1							
11	2	129150-32020	GASKET, PUMP	1							
12	2	119609-32040	O-RING, P16	2							
13	2	129150-35042	GASKET	1							
14	2	129150-35111	GASKET	1							
15	2	129486-42021	GASKET, WATER PUMP	1							
16	2	129486-42140	O-RING, G30	1							
17	2	124465-44950	GASKET, 16	2							
18	2	129795-49551	GASKET	1							
19	2	129150-49811	GASKET, THERMOSTAT	1							
20	2	124395-49840	GASKET, THERMOSTAT	1							
21	2	121850-51960	O-RING	1							
22	2	129150-77511	GASKET, AIR HEATER	1							
23	2	22190-080002	WASHER, SEAL 6	2							
24	2	22190-100002	WASHER, SEAL 10	2							
25	2	22190-220002	WASHER, SEAL 22	1							
26	2	23414-080000	GASKET, 8X1.0	1							
27	2	24311-000120	O-RING, 1AP12.0	3							
28	2	24311-000320	O-RING, 1AP32.0	3							
29	2	24341-000240	O-RING, 1AS24.0	1							
30	1	129400-92430	HONE, FLEX	1							1
31	1	977770-1207F	GASKET.LIQUID	1							1

Remarks
(1)Optional parts.

N:Old $\frac{\text{Yes}}{\text{No}}$ New. Q:Old $\frac{\text{No}}{\text{Yes}}$ New. R:Old $\frac{\text{Yes}}{\text{Yes}}$ New. S:Old $\frac{\text{No}}{\text{No}}$ New. W:Add. Z:Discontinued. F:Interchangeable by set. K:Q'ty Change

Copyright (C) YANMAR GLOBAL CS CO., LTD. All RightsReserved.

Parts No. Index

Parts No.	Fig. No.	Ref. No.
105025-59560	14	7
105225-59511	14	11
114250-39450	9	41
114250-53080	13	2
114250-53120	13	8
114250-53130	13	9
114250-53140	13	10
114250-53210	13	11
118400-77170	18	11
119005-35151	9	28
119131-18320	6	5
119233-77932	12	134
119593-59581	13	74
119609-32040	2	9
	17	12
119620-49290	10	34
119620-77380	16	4
119620-77421	16	7
119620-77440	16	12
119620-77461	16	13
119620-77471	16	14
119620-77480	16	19
119620-77490	16	15
119620-79200	16	8
119620-79210	16	9
119620-79220	16	10
119620-79230	16	11
119620-79250	16	6
119620-79260	16	17
119620-79280	16	20
119620-79290	16	21
119620-79300	16	22
119620-79310	16	24
119620-79320	16	25
119620-79330	16	26
119620-79340	16	27
119620-79350	16	28
119620-79360	16	29
119625-11880	4	30
	17	7
119640-01640	3	7
119650-77910	16	36
119660-61901	12	61
119802-01561	2	5
119802-03110	4	41
119802-03121	4	42
119802-03130	4	43
119802-03141	4	44
119802-11260	4	4
119802-11270	4	5

Parts No.	Fig. No.	Ref. No.
119802-11870	4	29
	17	6
119802-21650	8	8 -1
119802-21660	8	8
119802-25071	7	16
119802-25101	7	10
119802-25901	7	15
119802-35110	9	25
119802-39450	9	43
119802-49113	10	9
119802-49730	10	42
119802-51090	11	16
119802-51560	11	62
119802-51590	11	68
119802-51600	11	69
119802-51680	11	73
119802-51690	11	74
119802-55801	14	2 -1
119802-59550	13	68
119802-59560	13	70
119802-77200	16	35
119802-77330	16	32
119803-01520	2	4
119803-21200	8	4
119803-25050	7	9
119803-53400	13	15
119807-61420	12	24
119865-21600	8	14
119934-01800	2	3
119934-59910	11	130
119940-59130	9	37
119940-77270	16	31
120130-11860	4	57
120270-54410	4	32
120445-44540	10	49
121023-01551	2	19
121111-21501	8	11
121400-11340	4	25
	17	4
121450-42450	10	38
121520-34810	9	17
121550-23200	8	29
121750-59890	14	12
121850-21680	8	10
121850-51960	2	10
	17	21
123501-79240	16	5
123900-13610	6	3
123900-13630	6	4
124060-01050	1	4

Parts No.	Fig. No.	Ref. No.
124060-77680	13	75
124160-01751	2	6
	4	37
124160-01910	1	6
		7
124160-11360	4	49
124160-39140	9	42
124195-77770	18	23
124240-01871	2	7
124395-49840	10	17
	17	20
124460-11340	4	26
	17	5
124465-44950	10	39
	17	17
124722-59050	10	43
		46
	13	69
		72
124766-59050	14	5
		9
129001-01250	1	5
129001-02931	1	29
129004-03010	4	39
129004-11650	4	7
129004-11900	4	31
129004-34802	9	16
129004-42001	10	1
129004-42040	10	15
129004-49610	10	40
129004-49620	10	44
129004-49711	10	41
129004-49721	10	45
129004-55612	14	1
129005-03080	5	1
129005-11100	4	21
129005-22080	8	15
129005-22500	8	17
129005-22900	8	35
129005-22950	8	37
129005-59830	9	44
129006-35100	9	24
129006-44480	9	29
129008-51390	11	44
129008-51900	11	14
129008-51920	11	15
129008-77800	4	54
129052-79270	16	18
129100-01580	3	1
		14

Parts No.	Fig. No.	Ref. No.
129100-01580	8	2
129100-11112	4	22
129100-23910	8	32
129100-42051	10	3
129100-42121	10	4
129100-77510	5	8 -1
129103-49301	9	39
129115-91250	16	39
129115-91270	16	41
129129-01600	3	2
129136-77011	15	1
	19	1
129136-77310	15	2
	19	2
129136-77520	15	14
	19	14
129150-01200	1	27
129150-02020	1	9
129150-02450	7	4
129150-02871	1	32
129150-02931	1	24
129150-02941	1	35
129150-03070	4	40
129150-11230	4	8
129150-11280	4	6
129150-11370	4	12
129150-11750	4	10
129150-11810	4	58
129150-14101	7	6
129150-14200	7	1
129150-14400	7	2
129150-23601	8	30
129150-23611	8	33
129150-25301	7	14
129150-32020	9	14
	17	11
129150-35042	9	18
	17	13
129150-35111	9	27
	17	14
129150-35153	9	28 -1
129150-49811	10	30
	17	19
129150-59120	13	42
129150-59131	13	45
		49
129150-77511	5	8
		8 -2
	17	22
129155-49801	10	29

Parts No. Index

Parts No.	Fig. No.	Ref. No.
129155-51280	12	6
129155-61460	12	26
129202-22300	8	23
129240-79300	16	23
129242-55700	14	14
129242-55701	14	14 -1
129242-55720	14	15
129242-55730	14	16
129242-55740	14	17
129242-55750	14	18
129242-55760	14	19
129242-55770	14	20
129242-77010	18	1
129242-77100	18	3
129242-77110	18	4
129242-77120	18	5
129242-77130	18	6
129242-77140	18	7
129242-77150	18	8
129242-77160	18	9
129242-77170	18	10
129242-77180	18	12
129242-77210	18	15
129242-77260	18	19
129242-77270	18	21
129242-77280	18	22
129255-61410	12	23
129268-55701	14	14 -2
129350-49530	10	31
129400-01730	3	5
129400-01770	3	6
129400-77490	15	12
	19	12
129400-77571	15	18
	19	18
129400-92430	17	30
129403-42380	10	23
129407-01340	1	28
	17	2
129407-12110	5	4
	17	8
129407-32000	9	1
129410-03990	5	2
129411-13100	6	1
129417-33110	9	23
129417-35150	9	26
129423-77200	16	2
129423-77710	16	16
129436-35070	9	19 -1
129436-35091	9	19

Parts No.	Fig. No.	Ref. No.
129486-01670	3	18
129486-12581	5	7
129486-42021	10	14
	17	15
129486-42140	10	16
	17	16
129486-59551	13	71
129508-33010	9	21
129508-33050	9	22
129508-49030	9	30
129508-49040	9	34
129550-13110	6	2
	17	9
129550-42350	10	23 -1
129550-59120	13	46
129601-11241	4	1
129601-11251	4	2
129601-11310	4	46
	17	3
129601-11350	4	38
129601-51250	11	133
129601-59810	13	51
129601-59820	13	55
129601-59830	13	59
129601-59840	13	63
129602-12101	5	3
129604-21000	8	1
129604-53300	13	12
129604-77821	4	55
129612-42350	10	24
129612-52100	14	13
129630-59010	14	4
129630-77800	4	56
129642-61060	12	91
129648-01600	3	15
129648-01780	3	17
129648-44770	10	26
129652-11350	4	38 -1
129688-01780	3	6 -1
129688-07900	4	52 -2
129688-11700	4	13
129688-59100	13	76
129688-59110	13	77
129688-59120	13	78
129688-59130	13	79
129688-59150	13	80
129688-59160	5	10
129688-92600	17	1
129698-77020	18	2
129698-77190	18	13

Parts No.	Fig. No.	Ref. No.
129698-77200	18	14
129698-77220	18	16
129698-77230	18	17
129698-77250	18	18
129795-01900	16	1
129795-01950	2	8
129795-02412	1	12
129795-11120	4	23
129795-11180	4	24
129795-21661	8	9
129795-49551	10	32
	17	18
129900-07900	4	52
		52 -1
129900-77400	15	3
	19	3
129900-77440	15	6
	19	6
129900-77450	15	7
		11
	19	7
129900-77460	15	9
	19	9
129900-77480	15	10
	19	10
129900-77500	19	11
129900-77640	15	19
	19	19
129907-55801	14	2
129916-44740	10	25
129916-49740	10	10
129930-13201	6	7
	17	10
129956-59010	14	8
129957-59101	14	10
129961-59110	14	6
129972-77341	16	33
158552-51151	11	19
158552-51571	11	63
		64
158552-51580	11	67
158552-51600	11	77
158552-51670	11	6
158552-51781	11	103
158552-52100	11	128
158552-52311	11	112
158552-52400	11	113
158552-52500	11	129
158552-61441	12	25
158552-61900	12	82

Parts No.	Fig. No.	Ref. No.
158553-51551	11	4
158553-51630	11	78
158553-51650	11	80
158553-51660	11	81
158553-51670	11	72
158553-51680	11	82
158553-51770	11	109
158553-51930	11	106
	12	7
158553-61050	12	3
158553-61070	12	4
158557-51570	11	65
158563-51281	11	42
		43
158563-51330	11	53
158600-51270	11	41
158601-51550	11	61
158601-51570	11	66
158601-51650	11	5
158601-51770	11	102
158601-51790	11	104
171008-03990	9	31
		35
171008-77450	15	8
	19	8
171008-77510	15	13
	19	13
171008-77540	15	15
	19	15
171008-77650	15	20
	19	20
171008-77660	15	24
	19	24
171008-77670	15	25
	19	25
171008-77750	15	31
	19	31
171031-11741	2	22
171051-01921	1	8
171420-21580	8	12
22190-080002	2	11
	9	45
		47
	17	23
22190-100002	9	48
	17	24
22190-120002	11	107
		114
		131
	12	65

Parts No. Index

Parts No.	Fig. No.	Ref. No.
22190-180002	11	108
		115
22190-220002	3	9
	17	25
22217-140000	11	116
22252-000260	8	24
22312-050140	11	117
22351-030010	8	7
22351-050010	11	118
22351-060012	4	33
22512-070140	7	7
	8	5
22857-500100	4	47
		48
23080-015000	9	33
		38
23414-080000	10	18
	17	26
23857-030000	9	46
23875-020000	10	11
23876-010000	10	12
24311-000070	11	120
24311-000120	4	50
	17	27
24311-000160	14	21
24311-000320	2	12
		23
	4	51
	17	28
24321-000750	14	22
24341-000240	2	20
	17	29
24356-190180	11	121
24356-190200	11	75
		122
24372-000150	11	76
26106-060102	11	123
	12	68
26106-060142	12	88
		89
26106-060162	2	21
26106-060202	12	90
26106-060222	10	27
26106-060322	15	29
	19	29
26106-060402	15	30
	19	30
26106-080122	10	19
26106-080142	7	8
26106-080162	2	13

Parts No.	Fig. No.	Ref. No.
26106-080162	2	14
	3	10
	4	53
	10	20
		28
	11	134
26106-080202	5	5
		9
	9	40
	11	135
26106-080222	10	33
26106-080252	3	11
	4	34
	5	9 -1
26106-080302	2	15
	14	3
26106-080352	3	19
	4	35
	9	20
26106-080402	7	13
26106-080452	3	12
	10	21
	16	34
26106-080502	3	13
	4	36
26106-080552	2	16
	9	20 -1
26106-080602	10	22
26106-080802	5	6
26106-080852	2	17
26106-120252	19	32
26116-120202	15	32
	18	24
26206-100202	3	3
26206-100252	3	4
26226-080182	4	11
26306-080002	2	18
	6	6
26306-100002	16	30
26366-060002	9	49
	13	81
26450-060252	9	15
26450-080452	11	125
26577-060142	10	13
26756-060002	12	69
26776-140002	11	126
27241-120000	1	13
27241-300000	1	14
27241-400000	4	20
27310-080001	4	27

Parts No.	Fig. No.	Ref. No.
719803-01500	2	1
720445-44200	10	47
729402-14580	7	3
729402-23100	8	25
729602-01560	1	1
729604-53400	13	1
729688-51350	11	1
977770-1207F	17	31
X2114255110	15	5
	19	5
X2114535200	18	20
X2114555500	15	21
	19	21
X2114955020	15	22
	19	22
X2130350900	15	4
	19	4
X2240410100	15	23
	19	23
X9490561001	16	3

Parts No.	Fig. No.	Ref. No.