YANMAR

PARTS CATALOG

0CD11-M04601EN

Last update Aug., 2021

PREFACE

This parts catalog is the 2nd edition of 3TNV88-BDDC for DENYO Co., Ltd..

Published : March, 2020

Contents

0CD11-M04601

Fig. No.	Fig. Name
3TNV88-BDDC	
1.	CYLINDER BLOCK
2.	GEAR HOUSING
3.	FLYWHEEL HOUSING & OIL SUMP
4.	CYLINDER HEAD & BONNET
5.	SUCTION MANIFOLD
6.	EXHAUST MANIFOLD
7.	CAMSHAFT & DRIVING GEAR
8.	CRANKSHAFT & PISTON
9.	LUB. OIL SYSTEM
10.	COOLING WATER SYSTEM
11.	FUEL INJECTION PUMP
12.	GOVERNOR
13.	FUEL INJECTION VALVE
14.	FUEL PIPE
15.	STARTER MOTOR
16.	GENERATOR
17.	GASKET SET

Fig.1. CYLINDER BLOCK

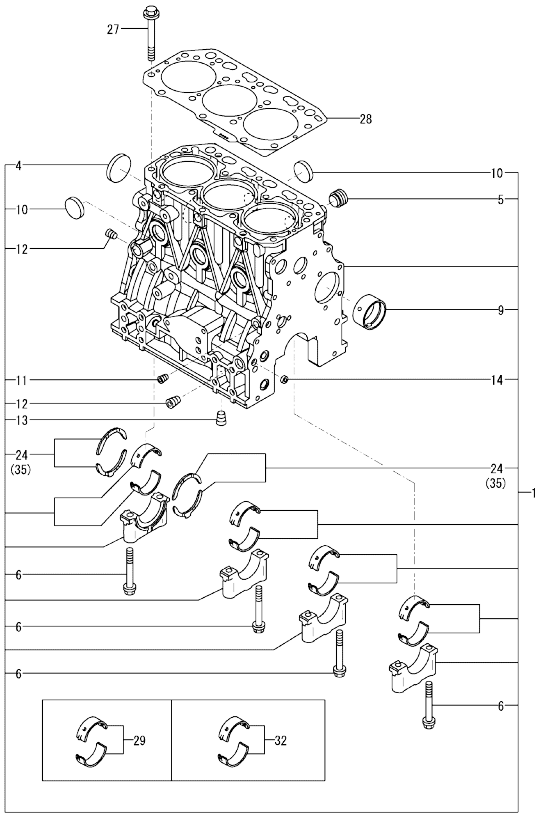

Remarks
(1)Spare parts.
(2)Under-sized(U.S.=0.25) parts.
(3)Over-sized(O.S.=0.25) parts.

(A)=3TNV88-BDDC (D)=
(B)= (E)=
(C)= (F)=

No.	Lev.	Parts No.	Description	Q'ty (A)	(B)	(C)	(D)	(E)	(F)	I	R
1	1	729005-01560	BLOCK ASSY, CYLINDER	1							
4	2	129001-01250	PLUG, 50	1							
5	2	171051-01921	PLUG, NPTF1	1							
6	2	129150-02020	BOLT, METAL CAP	8							
9	2	129795-02412	BUSH, CAMSHAFT	1							
10	2	27241-300000	PLUG 30	6							
11	2	124060-01050	PLUG, PT1/8	1							
12	2	124160-01910	PLUG, PT1/4	2							
13	2	124160-01910	PLUG, PT1/4	1							
14	2	27241-120000	PLUG, 12	2							
24	2	129150-02931	METAL ASSY, THRUST	2							
27	1	129150-01200	BOLT, CYLINDER HEAD	14							
28	1	129001-01340	GASKET, HEAD	1							
29	1	129001-02931	METAL ASSY, MAIN	4							1
32	1	129150-02871	METAL ASSY, MAIN .25	4							2
35	1	129150-02941	METAL ASSY, 0.25 OS	1							3

N:Old ←Yes/No→ New. Q:Old ←No/Yes→ New. R:Old ←Yes/Yes→ New. S:Old ←No/No→ New. W:Add. Z:Discontinued. F:Interchangeable by set. K:Q'ty Change

Copyright (C) 2020 YANMAR GLOBAL CS CO., LTD. All RightsReserved.

Fig.2. GEAR HOUSING

(A)=3TNV88-BDDC
(B)=
(C)=
(D)=
(E)=
(F)=

No.	Lev.	Parts No.	Description	Q'ty (A)	(B)	(C)	(D)	(E)	(F)	I	R
1	1	719803-01500	CASE ASSY, GEAR	1							
3	2	119934-01800	SEAL, OIL	1							
4	1	119803-01520	FLANGE, GEAR CASE	1							
5	1	119802-01561	STUD, M8X25	3							
6	1	124160-01751	CAP, FILLER	1							
7	1	124240-01871	COVER,HYDRAULIC PUMP	1							
8	1	129795-01950	PIPE, KNOCK L=18	2							
9	1	119609-32040	O-RING, P16	2							
10	1	121850-51960	O-RING, FUEL PUMP	1							
11	1	22190-080002	WASHER, SEAL 8	5							
12	1	24311-000320	O-RING, 1AP32.0	1							
13	1	26106-080162	BOLT, M8X 16 PLATED	4							
14	1	26106-080162	BOLT, M8X 16 PLATED	3							
15	1	26106-080302	BOLT, M8X 30 PLATED	1							
16	1	26106-080552	BOLT, M8X 55 PLATED	12							
17	1	26106-080852	BOLT, M8X 85 PLATED	3							
18	1	26306-080002	NUT, M8	3							
19	1	121023-01551	COVER, TACHOMETER	1							
20	1	24341-000240	O-RING, 1AS24.0	1							
21	1	26106-060162	BOLT, M6X 16 PLATED	2							
22	1	171031-11741	PIPE, FILLER	1							
23	1	24311-000320	O-RING, 1AP32.0	1							

N:Old ◄Yes/No► New. Q:Old ◄No/Yes► New. R:Old ◄Yes/Yes► New. S:Old ◄No/No► New. W:Add. Z:Discontinued. F:Interchangeable by set. K:Q'ty Change

Copyright (C) 2020 YANMAR GLOBAL CS CO., LTD. All RightsReserved.

Fig.3. FLYWHEEL HOUSING & OIL SUMP

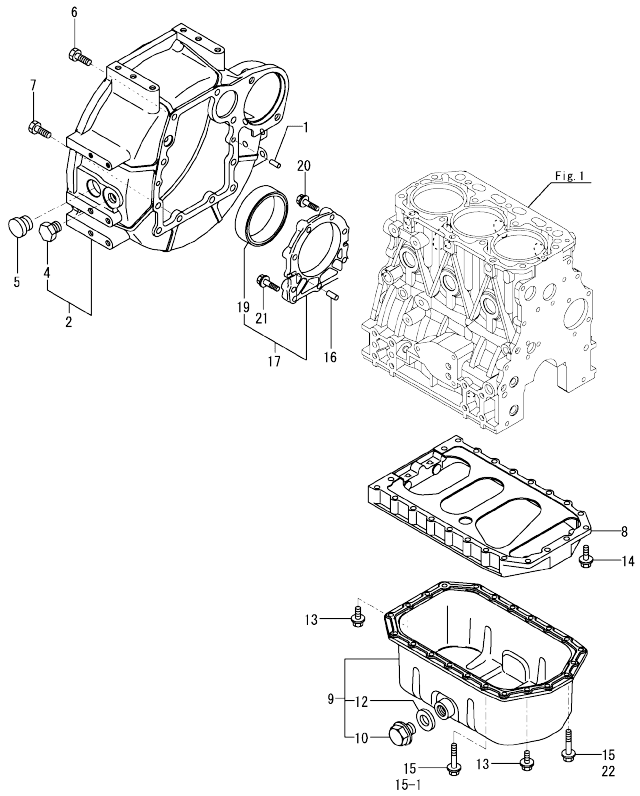

(A)=3TNV88-BDDC (D)=
(B)= (E)=
(C)= (F)=

No.	Lev.	Parts No.	Description	Q'ty (A)	(B)	(C)	(D)	(E)	(F)	I	R
1	1	129100-01580	PIN, PARALLEL 8X16	2							
2	1	119888-01601	HOUSING, FLYWHEEL	1							
4	2	129486-35210	PLUG, 3/4-16UNF	1							
5	1	119620-01750	CAP, WHEEL COVER	1							
6	1	26206-100252	BOLT, M10X 25 PLATED	6							
7	1	26206-100302	BOLT, M10X 30 PLATED	4							
8	1	129100-01730	SPACER, OIL PAN	1							
9	1	129100-01760	OIL PAN ASSY	1							
10	2	119640-01640	PLUG, DRAIN M22	1							
12	2	22190-220002	WASHER, SEAL 22	1							
13	1	26106-080162	BOLT, M8X 16 PLATED	4							
14	1	26106-080252	BOLT, M8X 25 PLATED	2							
15	1	26106-080452	BOLT, M8X 45 PLATED	20							
15-1	1	26106-080452	BOLT, M8X 45 PLATED	16						K	
	(A=EA5292)										
16	1	129100-01580	PIN, PARALLEL 8X16	2							
17	1	129100-01640	CASE ASSY, OIL SEAL	1							
19	2	129795-01780	SEAL, OIL	1							
20	1	129486-01670	BOLT, M8X30	6							
21	1	26106-080352	BOLT, M8X 35 PLATED	3							
22	1	26106-080502	BOLT, M8X 50 PLATED	4						W	
	(A=EA5292)										

N:Old ←Yes/No→ New. Q:Old ←No/Yes→ New. R:Old ←Yes/Yes→ New. S:Old ←No/No→ New. W:Add. Z:Discontinued. F:Interchangeable by set. K:Q'ty Change

Copyright (C) 2020 YANMAR GLOBAL CS CO., LTD. All RightsReserved.

Fig.4. CYLINDER HEAD & BONNET

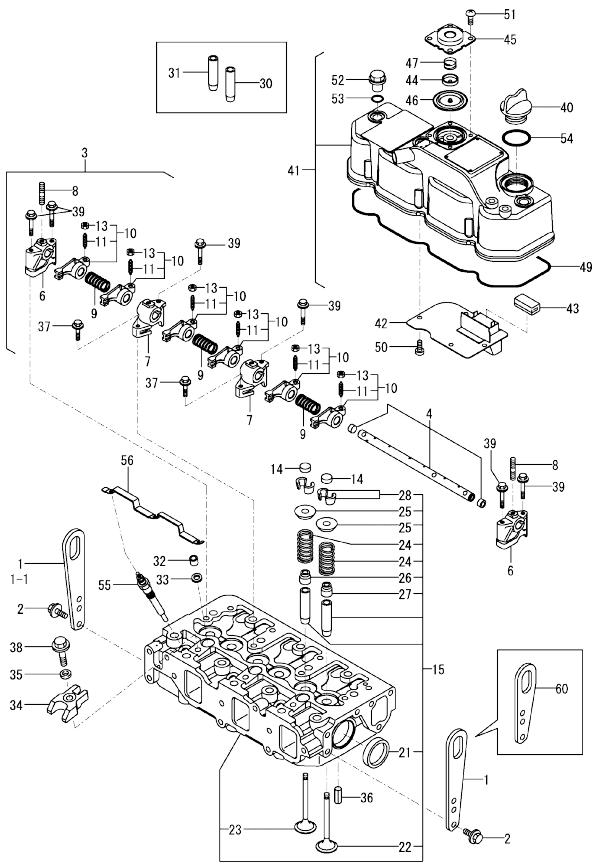

Remarks
(1)Spare parts.

(A)=3TNV88-BDDC (D)=
(B)= (E)=
(C)= (F)=

No.	Lev.	Parts No.	Description	Q'ty (A)	(B)	(C)	(D)	(E)	(F)	I	R
1	1	129900-07900	LIFTER, ENGINE	2							
1-1	1	129900-07900	LIFTER, ENGINE	1						K	
	(A=EB3098)										
2	1	26106-080162	BOLT, M8X 16 PLATED	4							
3	1	129004-11241	SHAFT ASSY, ROCKER	1							
4	2	129004-11251	SHAFT, ROCKER ARM	1							
6	2	119802-11260	SUPPORT, ROCKER ARM	2							
7	2	119802-11270	SUPPORT, ROCKER ARM	2							
8	2	119802-11280	BOLT, STUD	3							
9	2	129150-11280	SPRING, SHAFT	3							
10	2	129004-11650	ARM ASSY, ROCKER	6							
11	3	129150-11230	SCREW, VALVE ADJUST	6							
13	3	129150-11750	NUT, M8XP1.0	6							
14	1	129150-11370	CAP, VALVE	6							
15	1	129008-11710	HEAD ASSY, CYLINDER	1							
21	2	27241-400000	PLUG, 40	2							
22	2	129005-11100	VALVE, INTAKE	3							
23	2	129100-11112	VALVE, EXHAUST	3							
24	2	129795-11120	SPRING, VALVE	6							
25	2	129795-11180	RETAINER, SPRING	6							
26	2	121400-11340	SEAL, VALVE STEM	3							
27	2	124460-11340	SEAL, VALVE STEM	3							
28	2	27310-080001	COTTER, 8	6							
30	1	120130-11860	GUIDE, VALVE	3							1
31	1	129150-11810	GUIDE, VALVE	3							1
32	1	119802-11870	PROTECTOR, NOZZLE	3							
33	1	119625-11880	SEAT, NOZZLE	3							
34	1	129004-11900	RETAINER, NOZZLE	3							
35	1	120270-54410	WASHER, INJECTOR	3							
36	1	22351-060012	PIN, SPRING 6.0X12	2							
37	1	26106-080252	BOLT, M8X 25 PLATED	2							
38	1	26106-080352	BOLT, M8X 35 PLATED	3							
39	1	26106-080502	BOLT, M8X 50 PLATED	6							
40	1	124160-01751	CAP, FILLER	1							
41	1	129004-11350	BONNET ASSY, HEAD	1							
42	2	129004-03010	PLATE, BAFFLE	1							
43	2	129150-03070	BAFFLE, BREATHER	1							
44	2	119802-03110	PLATE, DIAPHRAGM	1							
45	2	119802-03121	COVER, DIAPHRAGM	1							
46	2	119802-03130	DIAPHRAGM, BREATHER	1							
47	2	119802-03141	SPRING, DIAPHRAGM	1							
49	2	129004-11310	GASKET, BONNET	1							
50	2	22857-500100	SCREW, 5X10	4							
51	2	22857-500100	SCREW, 5X10	4							
52	1	124160-11360	KNOB, BONNET	3							
53	1	24311-000120	O-RING, 1AP12.0	3							
54	1	24311-000320	O-RING, 1AP32.0	1							
55	1	129008-77800	PLUG, GLOW	3							
56	1	129008-77820	CONNECTOR, GLOW PLUG	1							
60	1	119226-07900	LIFTER, ENGINE	1						W	
	(A=*2009.06)										

N:Old $\frac{\text{Yes}}{\text{No}}$ New. Q:Old $\frac{\text{No}}{\text{Yes}}$ New. R:Old $\frac{\text{Yes}}{\text{Yes}}$ New. S:Old $\frac{\text{No}}{\text{No}}$ New. W:Add. Z:Discontinued. F:Interchangeable by set. K:Q'ty Change

Copyright (C) 2020 YANMAR GLOBAL CS CO., LTD. All RightsReserved.

Fig.5. SUCTION MANIFOLD

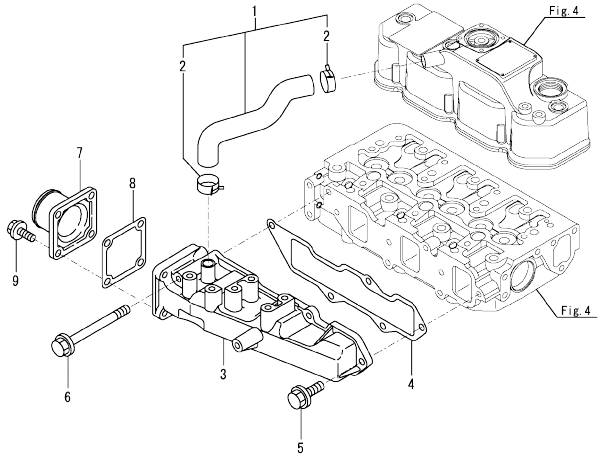

(A)=3TNV88-BDDC (D)=
(B)= (E)=
(C)= (F)=

No.	Lev.	Parts No.	Description	Q'ty (A)	(B)	(C)	(D)	(E)	(F)	I	R
1	1	129004-03080	HOSE ASSY, BREATHER	1							
2	2	129410-03990	CLAMP, HOSE 21.5	2							
3	1	129004-12101	MANIFOLD, INTAKE	1							
4	1	129001-12110	GASKET, MANIFOLD	1							
5	1	26106-080202	BOLT, M8X 20 PLATED	4							
6	1	26106-080802	BOLT, M8X 80 PLATED	1							
7	1	129486-12581	JOINT, MANIFOLD	1							
8	1	129150-77511	GASKET, AIR HEATER	1							
9	1	26106-080202	BOLT, M8X 20 PLATED	4							

N:Old ←Yes/No→ New. Q:Old ←No/Yes→ New. R:Old ←Yes/Yes→ New. S:Old ←No/No→ New. W:Add. Z:Discontinued. F:Interchangeable by set. K:Q'ty Change

Copyright (C) 2020 YANMAR GLOBAL CS CO., LTD. All RightsReserved.

Fig.6. EXHAUST MANIFOLD

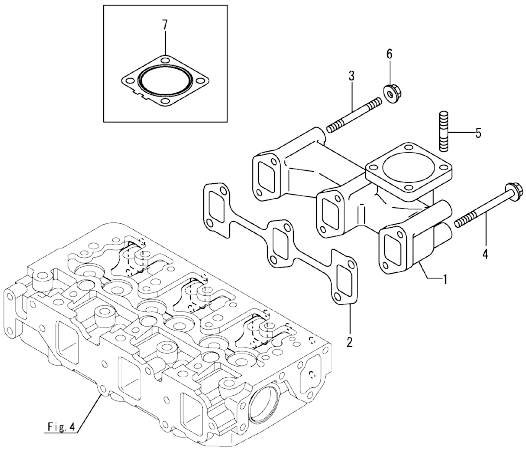

Remarks
(1)Loose parts.

(A)=3TNV88-BDDC (D)=
(B)= (E)=
(C)= (F)=

No.	Lev.	Parts No.	Description	Q'ty (A)	(B)	(C)	(D)	(E)	(F)	I	R
1	1	171350-13100	MANIFOLD, EXHAUST	1							
2	1	129150-13110	GASKET, MANIFOLD	1							
3	1	123900-13610	STUD, M8X80	2							
4	1	123900-13630	BOLT, M8X80	4							
4-1	1	129E00-13640	BOLT, M8X80 10.9T	4						N	
	(A=ER1480)										
5	1	119131-18320	STUD, M8X22	4							
6	1	26306-080002	NUT, M8	2							
7	1	129004-13200	GASKET, SILENCER	1							1

N:Old ◄Yes/No► New. Q:Old ◄No/Yes► New. R:Old ◄Yes/Yes► New. S:Old ◄No/No► New. W:Add. Z:Discontinued. F:Interchangeable by set. K:Q'ty Change

Copyright (C) 2020 YANMAR GLOBAL CS CO., LTD. All RightsReserved.

Fig.7. CAMSHAFT & DRIVING GEAR

(A)=3TNV88-BDDC
(B)=
(C)=
(D)=
(E)=
(F)=

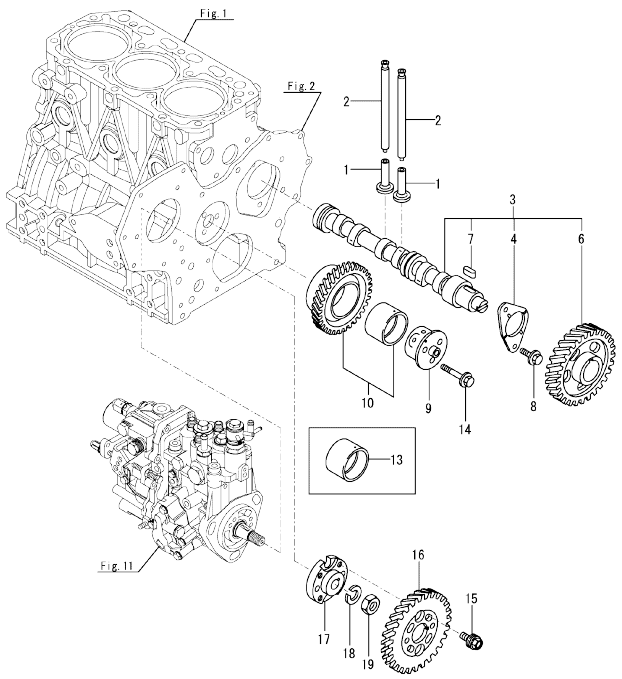

No.	Lev.	Parts No.	Description	Q'ty (A)	(B)	(C)	(D)	(E)	(F)	I	R
1	1	129150-14200	TAPPET	6							
2	1	129150-14400	ROD, PUSH L=178	6							
3	1	129129-14580	CAMSHAFT ASSY	1							
4	2	129150-02450	METAL, THRUST	1							
6	2	129150-14101	GEAR, CAMSHAFT	1							
7	2	22512-070140	KEY, 7X 14	1							
8	1	26106-080142	BOLT, M8X 14 PLATED	2							
9	1	119803-25050	SHAFT, IDLE GEAR	1							
10	1	119802-25101	GEAR ASSY, IDLE	1							
13	1	119802-25071	BUSH, IDLE GEAR	1							1
14	1	26106-080402	BOLT, M8X 40 PLATED	3							
15	1	129150-25301	BOLT, INJECTION PUMP	4							
16	1	119802-25901	GEAR, PUMP	1							
17	1	158552-51151	FLANGE, CAMSHAFT	1							
18	1	22217-140000	WASHER, SPRING 14	1							
19	1	26776-140002	NUT, LOCK M14	1							

Remarks
(1)Spare parts.

N:Old ←Yes/No→ New, Q:Old ←No/Yes→ New, R:Old ←Yes/Yes→ New, S:Old ←No/No→ New, W:Add, Z:Discontinued, F:Interchangeable by set, K:Q'ty Change

Copyright (C) 2020 YANMAR GLOBAL CS CO., LTD. All RightsReserved.

Fig.8. CRANKSHAFT & PISTON

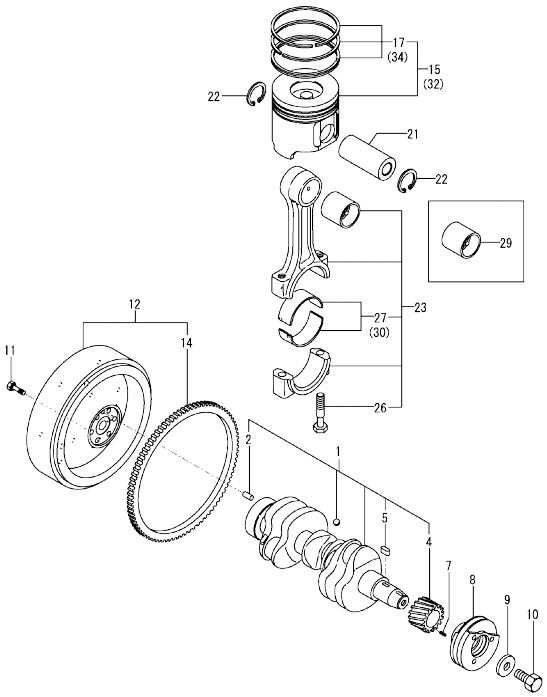

(A)=3TNV88-BDDC (D)=
(B)= (E)=
(C)= (F)=

No.	Lev.	Parts No.	Description	Q'ty (A)	(B)	(C)	(D)	(E)	(F)	I	R
1	1	129008-21000	CRANKSHAFT ASSY	1							
2	2	129100-01580	PIN, PARALLEL 8X16	1							
4	2	119803-21200	GEAR, CRANKSHAFT	1							
5	2	22512-070140	KEY, 7X 14	1							
7	1	22351-030010	PIN, SPRING 3.0X10	1							
8	1	129004-21650	V-PULLEY, CRANKSHAFT	1							
9	1	129795-21661	WASHER, 14	1							
10	1	121850-21680	BOLT, V-PULLEY	1							
11	1	121111-21501	BOLT, FLYWHEEL	6							
12	1	129188-21590	FLYWHEEL ASSY	1							
14	2	119865-21600	GEAR, RING Z=116	1							
15	1	129005-22080	PISTON ASSY	3							
17	2	129005-22500	RING SET, PISTON	3							
21	1	129202-22300	PIN, PISTON D26 L70	3							
22	1	22252-000260	RING, 26	6							
23	1	729402-23100	ROD ASSY, CONNECTING	3							
26	2	121550-23200	BOLT, CONNECTING ROD	6							
27	2	129150-23601	METAL ASSY,CRANK PIN	3							
29	1	129100-23910	METAL, PISTON PIN	3							1
30	1	129150-23611	METAL, CRANK PIN .25	3							2
32	1	129005-22900	PISTON ASSY, 0.25 OS	3							3
34	2	129005-22950	RING SET, PISTON .25	3							3

Remarks
(1)Spare parts.
(2)Under-sized(U.S.=0.25) parts.
(3)Over-sized(O.S.=0.25) parts.

N:Old ←Yes/No→ New. Q:Old ←No/Yes→ New. R:Old ←Yes/Yes→ New. S:Old ←No/No→ New. W:Add. Z:Discontinued. F:Interchangeable by set. K:Q'ty Change

Copyright (C) 2020 YANMAR GLOBAL CS CO., LTD. All RightsReserved.

Fig.9. LUB. OIL SYSTEM

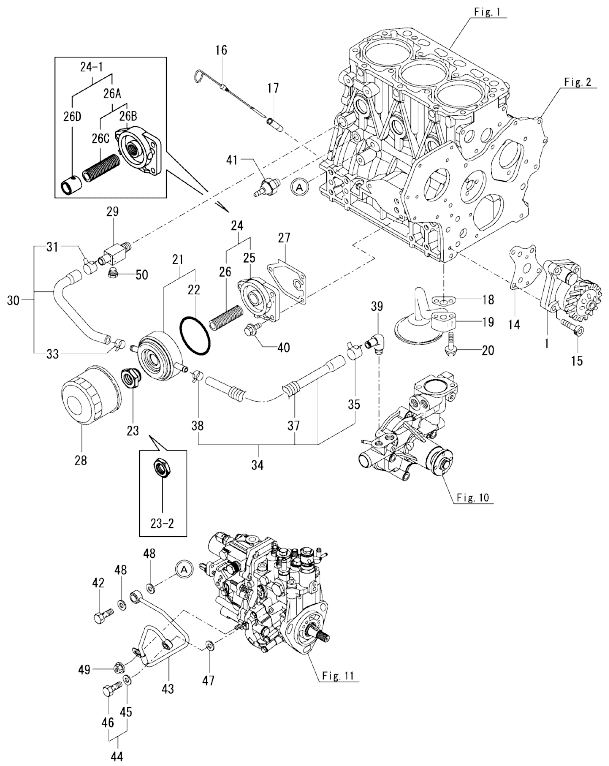

Remarks
(1)Spare parts.
(2)Interchangeable by simultaneous replacement with No.23-2, 24-1.

(A)=3TNV88-BDDC (D)=
(B)= (E)=
(C)= (F)=

No.	Lev.	Parts No.	Description	Q'ty (A)	(B)	(C)	(D)	(E)	(F)	I	R
1	1	129001-32001	PUMP ASSY, OIL	1							
1-1	1	129001-32002	PUMP ASSY, OIL	1						N	
	(A=EM1197)										
14	1	129150-32020	GASKET, PUMP	1							
15	1	26450-060252	BOLT, M6X 25	4							
16	1	129004-34802	DIPSTICK, OIL	1							
17	1	121520-34810	GUIDE, DIPSTICK	1							
18	1	129150-35042	GASKET, INLET PIPE	1							
19	1	129100-35301	PIPE ASSY, OIL INLET	1							
20	1	26106-080352	BOLT, M8X 35 PLATED	2							
21	1	129508-33010	COOLER ASSY, OIL	1							
21-1	1	129508-33031	COOLER ASSY, OIL	1						R	
	(A=E166849)										
22	2	129508-33050	O-RING	1							
22-1	2	129508-33060	GASKET, COOLER	1						R	
	(A=E166849)										
23	1	129417-33110	NUT, OIL COOLER	1							
23-1	1	129417-33111	NUT, OIL COOLER	1						R	
	(A=EI6169)										
23-2	1	124085-35350	NUT, M20	1						F	2
	(A=E166849)										
24	1	129006-35100	BRACKET ASSY, FILTER	1							
24-1	1	129508-35100	BRACKET ASSY,LO FILT	1						F	2
	(A=E166849)										
25	2	119802-35110	BRACKET, FILTER	1						Z	
	(A=E166849)										
26	2	129417-35150	STUD, M20X67	1						Z	
	(A=E166849)										
26A	2	129006-35100	BRACKET ASSY, FILTER	1						W	
	(A=E166849)										
26B	3	119802-35110	BRACKET, FILTER	1						W	
	(A=E166849)										
26C	3	129417-35150	STUD, M20X67	1						W	
	(A=E166849)										
26D	2	129508-35150	COLLAR, OIL-COOLER	1						W	
	(A=E166849)										
27	1	129150-35111	GASKET, BRACKET	1							
28	1	129150-35153	FILTER ASSY, D80X80L	1							1
29	1	129006-44480	JOINT, R02	1							
30	1	129508-49030	HOSE ASSY, COOLER IN	1							
31	2	171008-03990	CLAMP, HOSE 18.5	1							
33	2	23080-015000	CLAMP, 15	1							
34	1	129006-49040	HOSE ASSY,COOLER OUT	1							
35	2	171008-03990	CLAMP, HOSE 18.5	1							
37	2	129642-49180	TUBE, CORRUGATED 19	1							
38	2	23080-015000	CLAMP, 15	1							
39	1	129103-49301	ELBOW, PT1/4	1							
40	1	26106-080202	BOLT, M8X 20 PLATED	3							
41	1	114250-39450	SWITCH, HYDRAULIC	1							
42	1	124160-39140	BOLT, PIPE JOINT M10	1							
43	1	119802-39450	PIPE ASSY, OIL	1							

N:Old ←Yes/No→ New. Q:Old ←No/Yes→ New. R:Old ←Yes/Yes→ New. S:Old ←No/No→ New. W:Add. Z:Discontinued. F:Interchangeable by set. K:Q'ty Change

++ CONTINUE ++

Copyright (C) 2020 YANMAR GLOBAL CS CO., LTD. All RightsReserved.

Fig.9. LUB. OIL SYSTEM

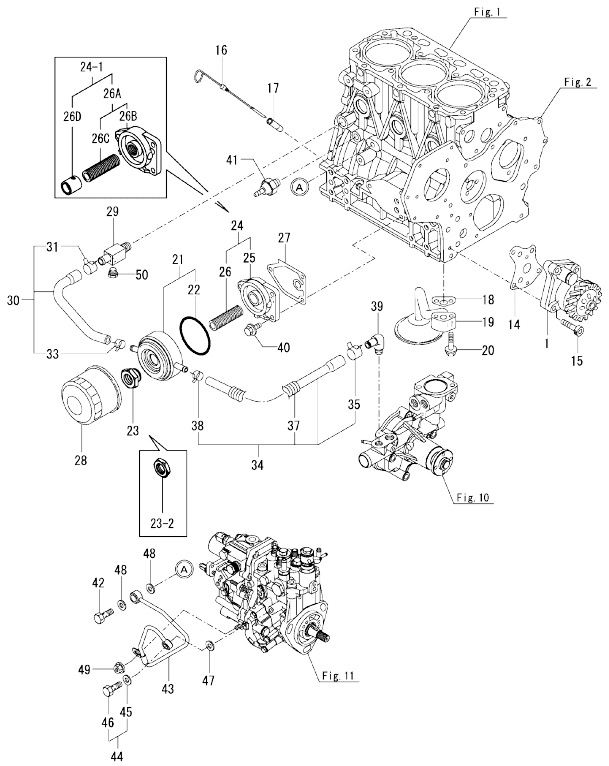

Remarks
(1)Spare parts.
(2)Interchangeable by simultaneous replacement with No.23-2, 24-1.

(A)=3TNV88-BDDC (D)=
(B)= (E)=
(C)= (F)=

No.	Lev.	Parts No.	Description	Q'ty (A)	(B)	(C)	(D)	(E)	(F)	I	R
44	1	129005-59830	BOLT ASSY, JOINT M8	1							
45	2	22190-080002	WASHER, SEAL 8	1							
46	2	23857-030000	BOLT, JOINT 3	1							
47	1	22190-080002	WASHER, SEAL 8	1							
48	1	22190-100002	WASHER, SEAL 10	2							
49	1	26366-060002	NUT, M6	1							
50	1	171056-49120	PLUG, DRAIN R1/4	1							

N:Old ←Yes/No→ New. Q:Old ←No/Yes→ New. R:Old ←Yes/Yes→ New. S:Old ←No/No→ New. W:Add. Z:Discontinued. F:Interchangeable by set. K:Q'ty Change

Copyright (C) 2020 YANMAR GLOBAL CS CO., LTD. All RightsReserved.

Fig.10. COOLING WATER SYSTEM

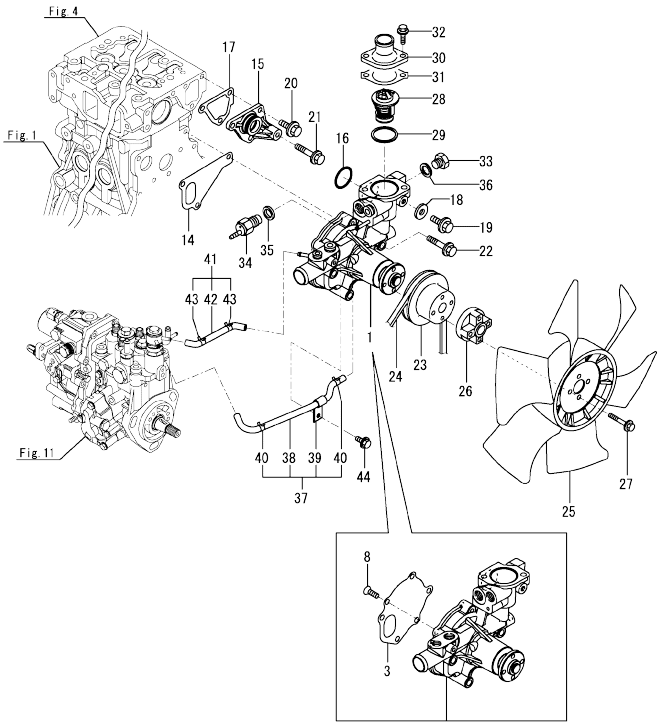

(A)=3TNV88-BDDC
(B)=
(C)=
(D)=
(E)=
(F)=

No.	Lev.	Parts No.	Description	Q'ty (A)	(B)	(C)	(D)	(E)	(F)	I	R
1	1	129004-42001	PUMP ASSY, WATER	1							
1-1	1	129004-42002	PUMP ASSY, CW	1						N	
	(A=E146836)										
3	2	129100-42051	GASKET, WATER PUMP	1							
8	2	121850-42410	SCREW	3							
8-1	2	129150-42290	SCREW, FLAT M6X15	3						N	
	(A=E146836)										
14	1	129486-42021	GASKET, WATER PUMP	1							
15	1	129004-42040	JOINT, WATER PIPE	1							
16	1	129486-42140	O-RING, G30	1							
17	1	124395-49840	GASKET, THERMOSTAT	1							
18	1	23414-080000	GASKET, 8X1.0	1							
19	1	26106-080122	BOLT, M8X 12 PLATED	1							
20	1	26106-080162	BOLT, M8X 16 PLATED	3							
21	1	26106-080452	BOLT, M8X 45 PLATED	1						Z	
	(A=EU2531)										
22	1	26106-080602	BOLT, M8X 60 PLATED	3							
23	1	129403-42380	V-PULLEY, PUMP	1							
24	1	129612-42350	V-BELT, A38	1							
25	1	129612-44700	FAN, COOLING	1							
26	1	171353-44760	SPACER, FAN 25MM	1							
27	1	26106-060402	BOLT, M6X 40 PLATED	4							
28	1	129155-49801	THERMOSTAT, 71C	1							
29	1	129150-49811	GASKET, THERMOSTAT	1							
30	1	129350-49530	COVER, THERMOSTAT	1							
31	1	129795-49551	GASKET, COVER	1							
32	1	26106-080222	BOLT, M8X 22 PLATED	2							
33	1	121450-42450	PLUG, M16	1							
34	1	121250-44901	SWITCH, TEMPERATURE	1							
35	1	124465-44950	GASKET, 16	1							
36	1	124465-44950	GASKET, 16	1							
37	1	129004-49610	HOSE ASSY, WATER A	1							
38	2	129004-49711	HOSE, WATER A	1							
39	2	119802-49730	RETAINER, PIPE	1							
40	2	124722-59050	CLAMP, HOSE 9	2							
41	1	129004-49620	HOSE ASSY, WATER B	1							
42	2	129004-49721	HOSE, WATER B	1							
43	2	124722-59050	CLAMP, HOSE 9	2							
44	1	26106-060122	BOLT, M6X 12 PLATED	1							
	(A=*2015.12)										

N:Old ◄Yes/No► New. Q:Old ◄No/Yes► New. R:Old ◄Yes/Yes► New. S:Old ◄No/No► New. W:Add. Z:Discontinued. F:Interchangeable by set. K:Q'ty Change

Copyright (C) 2020 YANMAR GLOBAL CS CO., LTD. All RightsReserved.

Fig.11. FUEL INJECTION PUMP

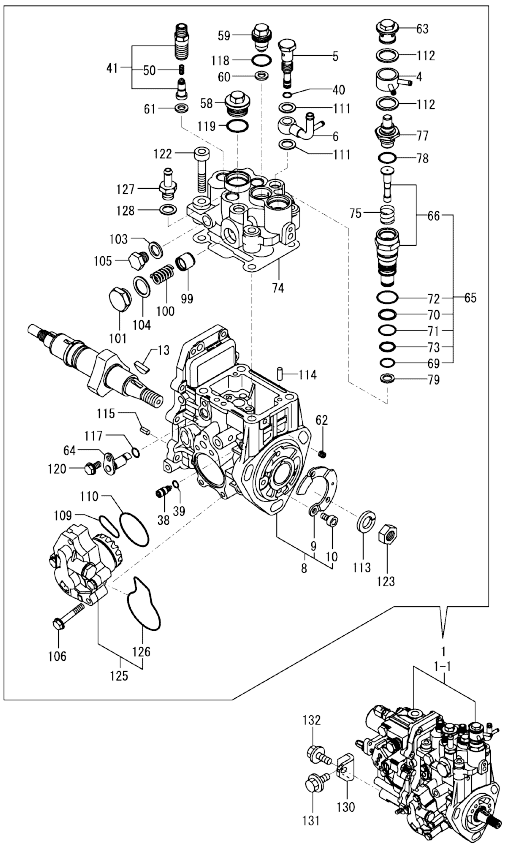

Remarks
(1)Governor(Fig.12) is incorporated in this Fuel Injection Pump(No.1).
(2)No.1-1 is interchangeable with a set of Fig.13 No.1-1.

(A)=3TNV88-BDDC (D)=
(B)= (E)=
(C)= (F)=

No.	Lev.	Parts No.	Description	Q'ty (A)	(B)	(C)	(D)	(E)	(F)	I	R
1	1	729239-51300	PUMP ASSY, INJECTION	1							1
1-1	1	729239-51310	PUMP ASSY, INJECTION	1						S	2
	(A=E_A8217)										
4	2	158553-51551	JOINT, COOLING WATER	1							
5	2	158601-51650	JOINT, OVERFLOW	1							
6	2	158552-51670	JOINT, OVERFLOW	1							
8	2	158552-51080	BODY ASSY, PUMP	1						W	
	(A=EB4083)										
9	3	129008-51900	COVER, PUMP	1						W	
	(A=EB4083)										
10	3	129008-51920	BOLT, M6X10	2						W	
	(A=EB4083)										
13	2	119802-51090	KEY, FEATHER 4X16	1							
38	2	158600-51270	STOPPER, TAPPET	1							
39	2	158563-51281	O-RING, 4D S6	1							
40	2	158563-51281	O-RING, 4D S6	1							
41	2	129008-51390	VALVE ASSY, DELIVERY	3							
50	3	158563-51330	SPRING, DELIVERY	3							
58	2	158601-51550	PLUG, M22	1							
59	2	119802-51560	PLUG, BARREL M14	1							
60	2	158552-51571	GASKET, BARREL PLUG	1							
61	2	158552-51571	GASKET, BARREL PLUG	3							
62	2	158557-51570	PLUG, RACK	1							
63	2	158601-51570	PLUG	1							
64	2	158552-51580	LIFTER, LINK	1							
65	2	119802-51590	TIMER ASSY	1							
66	3	119802-51600	TIMER ASSY	1							
69	3	158553-51670	O-RING, PUMP TIMER	1							
70	3	119802-51680	RING, BACKUP	1							
71	3	119802-51690	O-RING, 1016	1							
72	3	24356-010200	O-RING, 4D1020	1							
72-1	3	24356-190200	O-RING, 4D19020	1						R	
	(A=*2010.01)										
73	3	24372-000150	RING, BACK UP T2P15	1							
74	2	158552-51600	GASKET, HEAD	1							
75	2	158553-51630	SPRING, TIMER	1							
77	2	158553-51650	ELEMENT, THERMOSTAT	1							
78	2	158553-51660	O-RING, P14	1							
79	2	158553-51680	GASKET, TIMER	1							
99	2	158601-51770	PISTON, ACCUMLATOR	1							
100	2	158552-51781	SPRING, ACCUMULATOR	1							
101	2	158601-51790	PLUG, ACCUMULATOR	1							
103	2	22190-120002	WASHER, SEAL 12	1							
104	2	22190-180002	WASHER, SEAL 18	1							
105	2	23887-120002	PLUG, 12	1							
105-1	2	158553-51930	PLUG, M12	1						R	
	(A=EB1639)										
106	2	158553-51770	BOLT	4							
109	2	158552-52310	O-RING, FEED PUMP	1							
109-1	2	158552-52311	O-RING, FEED PUMP	1						R	
	(A=EB6138)										

N:Old ←Yes/No→ New, Q:Old ←No/Yes→ New, R:Old ←Yes/Yes→ New, S:Old ←No/No→ New, W:Add, Z:Discontinued, F:Interchangeable by set, K:Q'ty Change

++ CONTINUE ++

Copyright (C) 2020 YANMAR GLOBAL CS CO., LTD. All RightsReserved.

Fig.11. FUEL INJECTION PUMP

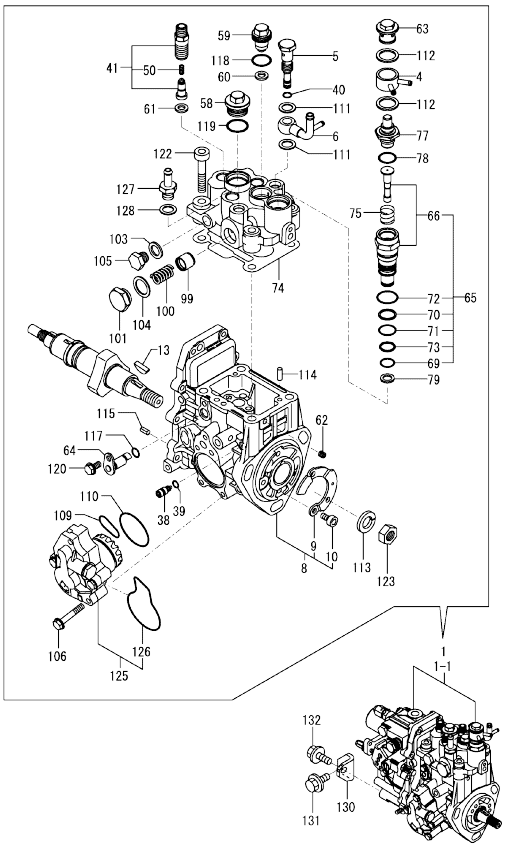

Remarks
(1)Governor(Fig.12) is incorporated in this Fuel Injection Pump(No.1).
(2)No.1-1 is interchangeable with a set of Fig.13 No.1-1.

(A)=3TNV88-BDDC (D)=
(B)= (E)=
(C)= (F)=

No.	Lev.	Parts No.	Description	Q'ty (A)	(B)	(C)	(D)	(E)	(F)	I	R
110	2	158552-52400	O-RING, 4E S42	1							
111	2	22190-120002	WASHER, SEAL 12	2							
112	2	22190-180002	WASHER, SEAL 18	2							
113	2	22217-140000	WASHER, SPRING 14	1							
114	2	22312-050140	PIN, PARALLEL 5X14	2							
115	2	22351-050010	PIN, SPRING 5.0X10	2							
117	2	24311-000070	O-RING, 1AP7.0	1							
118	2	24356-010180	O-RING, 4D1018	1							
118-1	2	24356-190180	O-RING, 4D19018	1							R
	(A=*2010.01)										
119	2	24356-010200	O-RING, 4D1020	1							
119-1	2	24356-190200	O-RING, 4D19020	1							R
	(A=*2010.01)										
120	2	26106-060102	BOLT, M6X 10 PLATED	1							
122	2	26450-080452	BOLT, M8X 45	4							
123	2	26776-140002	NUT, LOCK M14	1							
125	2	158552-52100	PUMP ASSY, FUEL FEED	1							
126	3	158552-52500	O-RING, PUMP INNER	1							
127	2	119934-59910	JOINT, PIPE	1							
128	2	22190-120002	WASHER, SEAL 12	1							
130	1	119802-51250	RETAINER, FUEL PUMP	1							
131	1	26106-080162	BOLT, M8X 16 PLATED	1							
132	1	26106-080202	BOLT, M8X 20 PLATED	1							

N:Old ←Yes/No→ New. Q:Old ←No/Yes→ New. R:Old ←Yes/Yes→ New. S:Old ←No/No→ New. W:Add. Z:Discontinued. F:Interchangeable by set. K:Q'ty Change

Copyright (C) 2020 YANMAR GLOBAL CS CO., LTD. All RightsReserved.

Fig.12. GOVERNOR

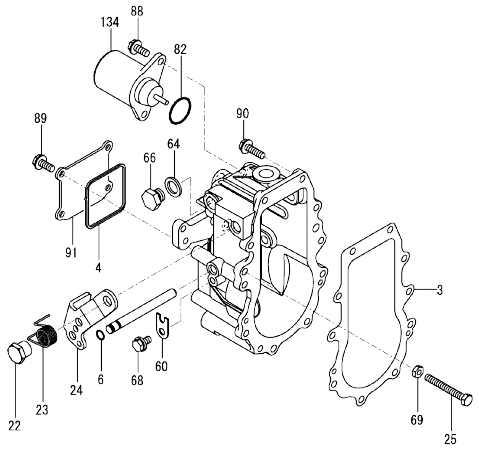

(A)=3TNV88-BDDC (D)=
(B)= (E)=
(C)= (F)=

No.	Lev.	Parts No.	Description	Q'ty (A)	(B)	(C)	(D)	(E)	(F)	I	R
3	2	158553-61050	GASKET, CASE	1							
4	2	158553-61070	GASKET, CASE	1							
6	2	129155-51280	O-RING, S6	1							
22	2	129255-61410	NUT, CONTROL LEVER	1							
23	2	119807-61420	SPRING, RETURN	1							
24	2	158552-61441	LEVER, REGULATOR	1							
25	2	129155-61460	BOLT, IDLE LIMIT	1							
25-1	2	129155-61461	BOLT,IDLE LIMIT	1							N
	(A=E113705)										
60	2	119660-61901	STOPPER, SHAFT	1							
64	2	22190-120002	WASHER, SEAL 12	1							
66	2	23887-120002	PLUG, 12	1							
66-1	2	158553-51930	PLUG, M12	1							R
	(A=EB1639)										
68	2	26106-060102	BOLT, M6X 10 PLATED	1							
69	2	26756-060002	NUT, LOCK M6	1							
69-1	2	119740-61470	NUT	1							R
	(A=E104077)										
82	2	158552-61900	O-RING	1							
88	2	26106-060142	BOLT, M6X 14 PLATED	2							
88-1	2	26106-060122	BOLT, M6X 12 PLATED	2							R
	(A=*2018.08)										
89	2	26106-060142	BOLT, M6X 14 PLATED	4							
89-1	2	26106-060122	BOLT, M6X 12 PLATED	4							R
	(A=*2018.08)										
90	2	26106-060202	BOLT, M6X 20 PLATED	10							
91	2	129642-61060	COVER, GOVERNOR CASE	1							
134	2	119233-77932	SOLENOID, STOP	1							

Remarks
* This figure(Governor) is incorporated in the Fuel Injection Pump(Fig.11).

N:Old ←Yes/No→ New. Q:Old ←No/Yes→ New. R:Old ←Yes/Yes→ New. S:Old ←No/No→ New. W:Add. Z:Discontinued. F:Interchangeable by set. K:Q'ty Change

Copyright (C) 2020 YANMAR GLOBAL CS CO., LTD. All RightsReserved.

Fig.13. FUEL INJECTION VALVE

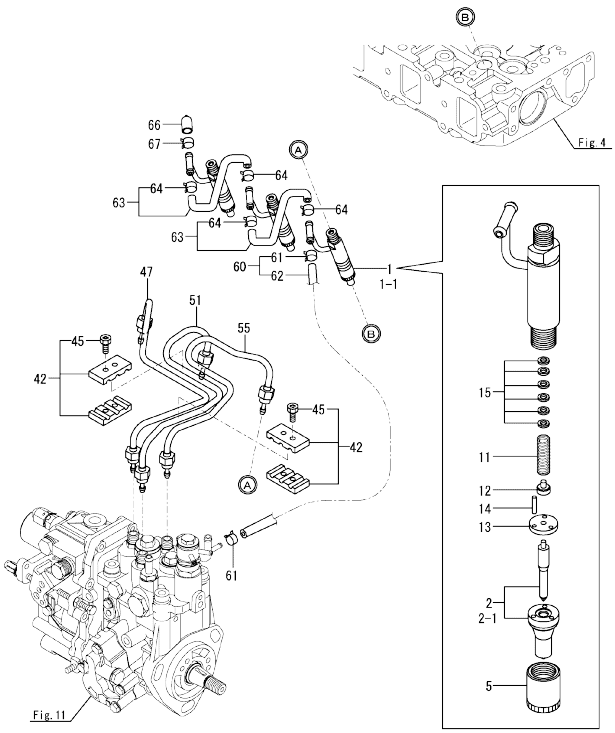

Remarks
(1)No.1-1 is interchangeable with a set of Fig.11 No.1-1.

(A)=3TNV88-BDDC (D)=
(B)= (E)=
(C)= (F)=

No.	Lev.	Parts No.	Description	Q'ty (A)	(B)	(C)	(D)	(E)	(F)	I	R
1	1	729604-53200	VALVE ASSY,INJECTION	3							
1-1	1	729604-53400	VALVE ASSY,INJECTION	3						S	1
	(A=E_A8217)										
2	2	129604-53000	VALVE ASSY,INJECTION	3							
2-1	2	129604-53300	VALVE ASSY,INJECTION	3						S	
	(A=E_A8217)										
5	2	114250-53080	NUT, NOZZLE	3							
11	2	114250-53120	SPRING, NOZZLE	3							
12	2	114250-53130	SEAT, SPRING	3							
13	2	114250-53140	SPACER, VALVE STOP	3							
14	2	114250-53210	PIN, POSITIONING	6							
15	2	119803-53400	SHIM SET	3							
42	1	129150-59120	RETAINER, PIPE	2							
45	2	129150-59131	BOLT, M4X14	4							
47	1	129004-59811	PIPE ASSY, INJECTION	1							
51	1	129004-59821	PIPE ASSY, INJECTION	1							
55	1	129004-59831	PIPE ASSY, INJECTION	1							
60	1	119802-59550	HOSE ASSY, RETURN	1							
61	2	124722-59050	CLAMP, HOSE 9	2							
62	2	119802-59560	HOSE, FUEL RETURN	1							
63	1	129486-59551	HOSE ASSY, RETURN	2							
64	2	124722-59050	CLAMP, HOSE 9	4							
66	1	119593-59581	CAP, RETURN PIPE	1							
67	1	124060-77680	CLAMP, HOSE 10	1							

N:Old ◄Yes/No► New. Q:Old ◄No/Yes► New. R:Old ◄Yes/Yes► New. S:Old ◄No/No► New. W:Add. Z:Discontinued. F:Interchangeable by set. K:Q'ty Change

Copyright (C) 2020 YANMAR GLOBAL CS CO., LTD. All RightsReserved.

Fig.14. FUEL PIPE

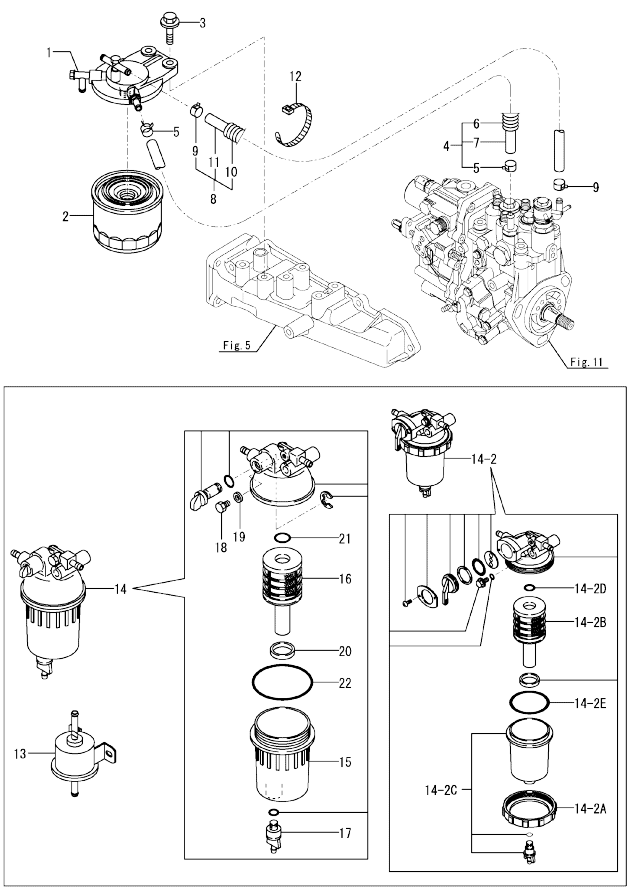

Remarks
(1)Loose parts.

(A)=3TNV88-BDDC (D)=
(B)= (E)=
(C)= (F)=

No.	Lev.	Parts No.	Description	Q'ty (A)	(B)	(C)	(D)	(E)	(F)	I	R
1	1	129004-55612	BRACKET, FILTER	1							
2	1	119802-55801	FILTER, FUEL	1							
3	1	26106-080302	BOLT, M8X 30 PLATED	2							
4	1	129044-59010	HOSE ASSY, D13XL220	1							
5	2	124766-59050	CLAMP, HOSE 11.5	2							
6	2	129044-59100	TUBE, CORRUGATED 15	1							
7	2	129044-59510	HOSE, FUEL L=220	1							
8	1	129950-59311	HOSE ASSY, FUEL	1							
9	2	124766-59050	CLAMP, HOSE 11.5	2							
10	2	129961-59110	TUBE, CORRUGATED 15	1							
11	2	105025-59580	HOSE, FUEL	1							
12	1	121750-59890	BAND, NYLON	1							
13	1	129612-52100	PUMP, FUEL FEED	1							1
14	1	129242-55700	SEPARATOR ASSY,WATER	1							1
14-1	1	129242-55701	SEPARATOR ASSY,WATER	1						N	1
14-2	(A=EC6502) 1 (A=EP1634)	119802-55700	SEPARATOR ASSY,WATER	1						N	1
14-2A	2	129100-55690	NUT, RETAINING	1							
14-2B	2	119802-55710	ELEMENT, FUEL	1							
14-2C	2	119802-55730	CUP ASSY, SEPARATOR	1							
14-2D	2	24311-000160	O-RING, 1AP16.0	1							
14-2E	2	24321-000650	O-RING, 1AG65.0	1							
15	2	129242-55720	CUP, SEPARATOR	1						Z	
16	(A=EP1634) 2 (A=EP1634)	129242-55730	ELEMENT, FUEL FILTER	1						Z	
17	2	129242-55740	PLUG, DRAIN	1						Z	
18	(A=EP1634) 2 (A=EP1634)	129242-55750	VALVE, AIR VENT	1						Z	
19	(A=EP1634) 2 (A=EP1634)	129242-55760	GASKET, PLUG	1						Z	
20	2	129242-55770	FLOAT	1						Z	
21	(A=EP1634) 2 (A=EP1634)	24311-000160	O-RING, 1AP16.0	1						Z	
22	(A=EP1634) 2 (A=EP1634)	24321-000750	O-RING, 1AG75.0	1						Z	

N:Old ←Yes/No→ New. Q:Old ←No/Yes→ New. R:Old ←Yes/Yes→ New. S:Old ←No/No→ New. W:Add. Z:Discontinued. F:Interchangeable by set. K:Q'ty Change

Copyright (C) 2020 YANMAR GLOBAL CS CO., LTD. All RightsReserved.

Fig.15. STARTER MOTOR

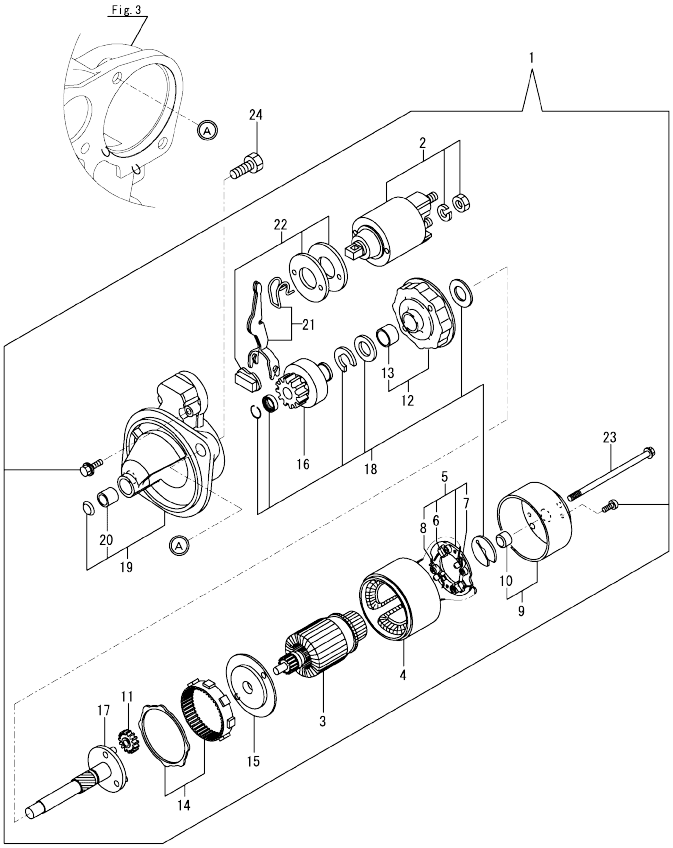

(A)=3TNV88-BDDC
(B)=
(C)=
(D)=
(E)=
(F)=

No.	Lev.	Parts No.	Description	Q'ty (A)	(B)	(C)	(D)	(E)	(F)	I	R
1	1	129242-77010	STARTER, 1.7	1							
2	2	129698-77020	SWITCH ASSY, MAGNET	1							
3	2	129242-77100	ARMATURE ASSY	1							
4	2	129242-77110	YOKE ASSY	1							
5	2	129242-77120	HOLDER ASSY, BRUSH	1							
6	3	129242-77130	BRUSH, -	2							
7	3	129242-77140	BRUSH SET	1							
8	3	129242-77150	SPRING, BRUSH	4							
9	2	129242-77160	COVER ASSY, STARTER	1							
10	3	129242-77170	METAL, REAR COVER	1							
11	2	118400-77170	GEAR, PLANETARY	3							
12	2	129242-77180	BRACKET, CENTER P	1							
13	3	129698-77190	BRACKET, CENTER	1							
14	2	129698-77200	GEAR, INTERNAL	1							
15	2	129242-77210	BRACKET, CENTER A	1							
16	2	129698-77220	PINION ASSY	1							
17	2	129698-77230	SHAFT, PINION	1							
18	2	129698-77250	WASHER SET	1							
19	2	129242-77260	CASE ASSY, GEAR	1							
20	3	X2114535200	METAL, STARTER	1							
21	2	129242-77270	LEVER SET, SHIFT	1							
22	2	129242-77280	COVER KIT, DUST	1							
23	2	124195-77770	BOLT, THROUGH	2							
24	1	26116-120252	BOLT, M12X 25 PLATED	2							
24-1	1	26106-120252	BOLT, M12X 25 PLATED	2							R
	(A=*2011.01)										

N:Old $\xleftarrow[\text{No}]{\text{Yes}}$ New. Q:Old $\xleftarrow[\text{Yes}]{\text{No}}$ New. R:Old $\xleftarrow[\text{Yes}]{\text{Yes}}$ New. S:Old $\xleftarrow[\text{No}]{\text{No}}$ New. W:Add. Z:Discontinued. F:Interchangeable by set. K:Q'ty Change

Copyright (C) 2020 YANMAR GLOBAL CS CO., LTD. All RightsReserved.

Fig.16. GENERATOR

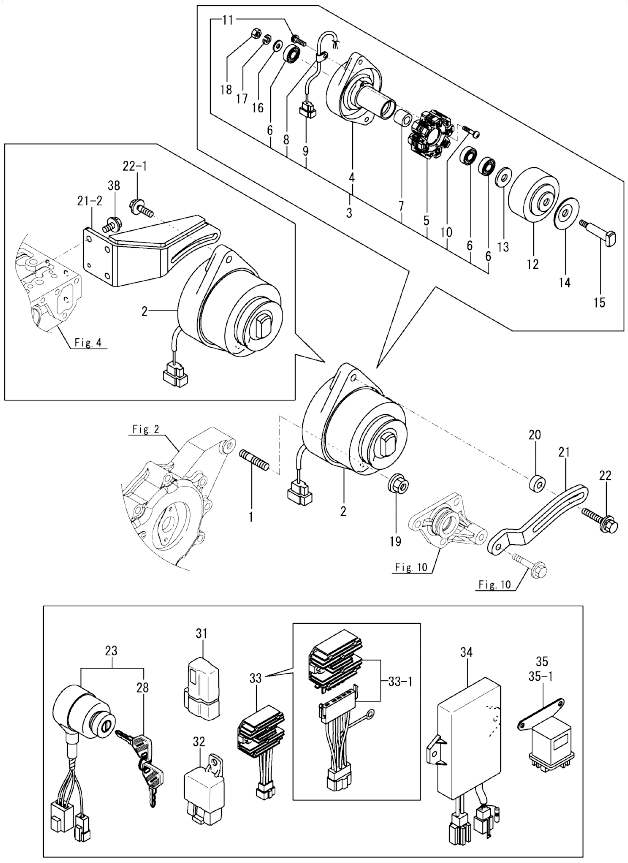

(A)=3TNV88-BDDC
(B)=
(C)=
(D)=
(E)=
(F)=

No.	Lev.	Parts No.	Description	Q'ty (A)	(B)	(C)	(D)	(E)	(F)	I	R
1	1	129795-01900	BOLT, M10X33	1							
2	1	171301-77201	DYNAMO ASSY, 15A	1							
3	2	XM08137	PLATE ASSY	1							
4	3	X2A07073KA	PLATE	1							
5	3	X4A07023KB	STATOR ASSY	1							
6	3	24104-062010	BEARING, 6201UUC3	3							
7	3	XM329830000	COLLAR	1							
8	3	XM069000000	CLAMP	1							
9	3	X417878	COUPLER	1							
10	3	XYSPS402400	SCREW	2							
11	3	XYSPS400800	SCREW	1							
12	2	X3A08877KA	FLYWHEEL	1							
13	2	XM67935	WASHER	1							
14	2	XM721740000	PULLEY	1							
15	2	X4A07403K01	SHAFT	1							
16	2	XM860250000	WASHER, 10	1							
17	2	XM219230000	WASHER, SPRING	1							
18	2	XM863720000	NUT	1							
19	1	26306-100002	NUT, M10	1							
20	1	119940-77270	SPACER, GENERATOR	1						Z	
	(A=EN3149)										
21	1	129004-77330	ADJUSTER, BELT	1							
21-1	1	129004-77320	ADJUSTER, BELT	1						R	
	(A=EN3149)										
21-2	1	129239-77320	ADJUSTER, BELT	1						N	
	(A=EU2531)										
22	1	129972-77341	BOLT, ADJUSTER L=50	1							
22-1	1	119810-77340	BOLT, ADJUSTER L=30	1						R	
	(A=EN3149)										
23	1	194940-52110	SWITCH, STARTING	1							1
23-1	1	129902-77500	SWITCH ASSY, STARTER	1						N	1
	(A=E160487)										
28	2	198360-52160	KEY ASSY, SPARE	1							
31	1	119643-66900	DIODE	2							1
32	1	119247-77100	RELAY, POWER SN2213	1							1
33	1	119865-77700	CURRENT LIMITER ASSY	1							1
33-1	1	119865-77701	LIMITER, CURRENT 20A	1						S	1
	(A=EA8189)										
34	1	129246-77800	RELAY, EMERGENCY	1							1
34-1	1	129239-77801	CONTROLLER ASSY	1						N	1
	(A=EM8223)										
35	1	119650-77910	RELAY ASSY, GLOW	1							1
35-1	1	119650-77911	RELAY ASSY, GLOW	1						S	2
	(A=EE6245)										
38	1	26106-080162	BOLT, M8X 16 PLATED	3						W	
	(A=EU2531)										

Remarks
(1)Loose parts.
(2)Loose parts Pd free material.

N:Old $\frac{\text{Yes}}{\text{No}}$ New. Q:Old $\frac{\text{No}}{\text{Yes}}$ New. R:Old $\frac{\text{Yes}}{\text{Yes}}$ New. S:Old $\frac{\text{No}}{\text{No}}$ New. W:Add. Z:Discontinued. F:Interchangeable by set. K:Q'ty Change

Copyright (C) 2020 YANMAR GLOBAL CS CO., LTD. All RightsReserved.

Fig.17. GASKET SET

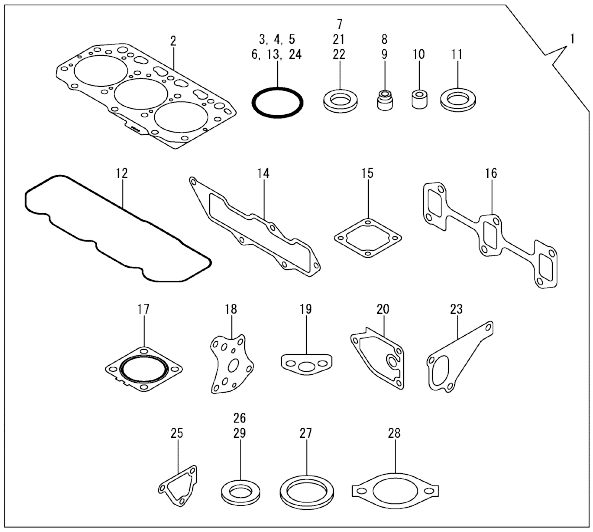

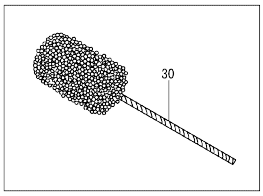

(A)=3TNV88-BDDC (D)=
(B)= (E)=
(C)= (F)=

No.	Lev.	Parts No.	Description	Q'ty (A)	(B)	(C)	(D)	(E)	(F)	I	R
1	1	729005-92660	GASKET SET	1							1
2	2	129001-01340	GASKET, HEAD	1							
3	2	119609-32040	O-RING, P16	2							
4	2	121850-51960	O-RING, FUEL PUMP	1							
5	2	24311-000320	O-RING, 1AP32.0	3							
6	2	24341-000240	O-RING, 1AS24.0	1							
7	2	22190-220002	WASHER, SEAL 22	1							
8	2	121400-11340	SEAL, VALVE STEM	3							
9	2	124460-11340	SEAL, VALVE STEM	3							
10	2	119802-11870	PROTECTOR, NOZZLE	3							
11	2	119625-11880	SEAT, NOZZLE	3							
12	2	129004-11310	GASKET, BONNET	1							
13	2	24311-000120	O-RING, 1AP12.0	3							
14	2	129001-12110	GASKET, MANIFOLD	1							
15	2	129150-77511	GASKET, AIR HEATER	1							
16	2	129150-13110	GASKET, MANIFOLD	1							
17	2	129004-13200	GASKET, SILENCER	1							
18	2	129150-32020	GASKET, PUMP	1							
19	2	129150-35042	GASKET, INLET PIPE	1							
20	2	129150-35111	GASKET, BRACKET	1							
21	2	22190-080002	WASHER, SEAL 8	2							
22	2	22190-100002	WASHER, SEAL 10	2							
23	2	129486-42021	GASKET, WATER PUMP	1							
24	2	129486-42140	O-RING, G30	1							
25	2	124395-49840	GASKET, THERMOSTAT	1							
26	2	23414-080000	GASKET, 8X1.0	1							
27	2	129150-49811	GASKET, THERMOSTAT	1							
28	2	129795-49551	GASKET, COVER	1							
29	2	124465-44950	GASKET, 16	2							
30	1	129400-92430	HONE, FLEX	1							1

Remarks
(1)Optional parts.

N:Old ◄Yes/No► New. Q:Old ◄No/Yes► New. R:Old ◄Yes/Yes► New. S:Old ◄No/No► New. W:Add. Z:Discontinued. F:Interchangeable by set. K:Q'ty Change

Copyright (C) 2020 YANMAR GLOBAL CS CO., LTD. All RightsReserved.

Parts No. Index

Parts No.	Fig. No.	Ref. No.
105025-59580	14	11
114250-39450	9	41
114250-53080	13	5
114250-53120	13	11
114250-53130	13	12
114250-53140	13	13
114250-53210	13	14
118400-77170	15	11
119131-18320	6	5
119226-07900	4	60
119233-77932	12	134
119247-77100	16	32
119593-59581	13	66
119609-32040	2	9
	17	3
119620-01750	3	5
119625-11880	4	33
	17	11
119640-01640	3	10
119643-66900	16	31
119650-77910	16	35
119650-77911	16	35 -1
119660-61901	12	60
119740-61470	12	69 -1
119802-01561	2	5
119802-03110	4	44
119802-03121	4	45
119802-03130	4	46
119802-03141	4	47
119802-11260	4	6
119802-11270	4	7
119802-11280	4	8
119802-11870	4	32
	17	10
119802-25071	7	13
119802-25101	7	10
119802-25901	7	16
119802-35110	9	25
		26 B
119802-39450	9	43
119802-49730	10	39
119802-51090	11	13
119802-51250	11	130
119802-51560	11	59
119802-51590	11	65
119802-51600	11	66
119802-51680	11	70
119802-51690	11	71
119802-55700	14	14 -2
119802-55710	14	14 -2B

Parts No.	Fig. No.	Ref. No.
119802-55730	14	14 -2C
119802-55801	14	2
119802-59550	13	60
119802-59560	13	62
119803-01520	2	4
119803-21200	8	4
119803-25050	7	9
119803-53400	13	15
119807-61420	12	23
119810-77340	16	22 -1
119865-21600	8	14
119865-77700	16	33
119865-77701	16	33 -1
119888-01601	3	2
119934-01800	2	3
119934-59910	11	127
119940-77270	16	20
120130-11860	4	30
120270-54410	4	35
121023-01551	2	19
121111-21501	8	11
121250-44901	10	34
121400-11340	4	26
	17	8
121450-42450	10	33
121520-34810	9	17
121550-23200	8	26
121750-59890	14	12
121850-21680	8	10
121850-42410	10	8
121850-51960	2	10
	17	4
123900-13610	6	3
123900-13630	6	4
124060-01050	1	11
124060-77680	13	67
124085-35350	9	23 -2
124160-01751	2	6
	4	40
124160-01910	1	12
		13
124160-11360	4	52
124160-39140	9	42
124195-77770	15	23
124240-01871	2	7
124395-49840	10	17
	17	25
124460-11340	4	27
	17	9
124465-44950	10	35

Parts No.	Fig. No.	Ref. No.
124465-44950	10	36
	17	29
124722-59050	10	40
		43
	13	61
		64
124766-59050	14	5
		9
129001-01250	1	4
129001-01340	1	28
	17	2
129001-02931	1	29
129001-12110	5	4
	17	14
129001-32001	9	1
129001-32002	9	1 -1
129004-03010	4	42
129004-03080	5	1
129004-11241	4	3
129004-11251	4	4
129004-11310	4	49
	17	12
129004-11350	4	41
129004-11650	4	10
129004-11900	4	34
129004-12101	5	3
129004-13200	6	7
	17	17
129004-21650	8	8
129004-34802	9	16
129004-42001	10	1
129004-42002	10	1 -1
129004-42040	10	15
129004-49610	10	37
129004-49620	10	41
129004-49711	10	38
129004-49721	10	42
129004-55612	14	1
129004-59811	13	47
129004-59821	13	51
129004-59831	13	55
129004-77320	16	21 -1
129004-77330	16	21
129005-11100	4	22
129005-22080	8	15
129005-22500	8	17
129005-22900	8	32
129005-22950	8	34
129005-59830	9	44
129006-35100	9	24

Parts No.	Fig. No.	Ref. No.
129006-35100	9	26 A
129006-44480	9	29
129006-49040	9	34
129008-11710	4	15
129008-21000	8	1
129008-51390	11	41
129008-51900	11	9
129008-51920	11	10
129008-77800	4	55
129008-77820	4	56
129044-59010	14	4
129044-59100	14	6
129044-59510	14	7
129100-01580	3	1
		16
	8	2
129100-01640	3	17
129100-01730	3	8
129100-01760	3	9
129100-11112	4	23
129100-23910	8	29
129100-35301	9	19
129100-42051	10	3
129100-55690	14	14 -2A
129103-49301	9	39
129129-14580	7	3
129150-01200	1	27
129150-02020	1	6
129150-02450	7	4
129150-02871	1	32
129150-02931	1	24
129150-02941	1	35
129150-03070	4	43
129150-11230	4	11
129150-11280	4	9
129150-11370	4	14
129150-11750	4	13
129150-11810	4	31
129150-13110	6	2
	17	16
129150-14101	7	6
129150-14200	7	1
129150-14400	7	2
129150-23601	8	27
129150-23611	8	30
129150-25301	7	15
129150-32020	9	14
	17	18
129150-35042	9	18
	17	19

Parts No. Index

Parts No.	Fig. No.	Ref. No.
129150-35111	9	27
	17	20
129150-35153	9	28
129150-42290	10	8 -1
129150-49811	10	29
	17	27
129150-59120	13	42
129150-59131	13	45
129150-77511	5	8
	17	15
129155-49801	10	28
129155-51280	12	6
129155-61460	12	25
129155-61461	12	25 -1
129188-21590	8	12
129202-22300	8	21
129239-77320	16	21 -2
129239-77801	16	34 -1
129242-55700	14	14
129242-55701	14	14 -1
129242-55720	14	15
129242-55730	14	16
129242-55740	14	17
129242-55750	14	18
129242-55760	14	19
129242-55770	14	20
129242-77010	15	1
129242-77100	15	3
129242-77110	15	4
129242-77120	15	5
129242-77130	15	6
129242-77140	15	7
129242-77150	15	8
129242-77160	15	9
129242-77170	15	10
129242-77180	15	12
129242-77210	15	15
129242-77260	15	19
129242-77270	15	21
129242-77280	15	22
129246-77800	16	34
129255-61410	12	22
129350-49530	10	30
129400-92430	17	30
129403-42380	10	23
129410-03990	5	2
129417-33110	9	23
129417-33111	9	23 -1
129417-35150	9	26
		26 C

Parts No.	Fig. No.	Ref. No.
129486-01670	3	20
129486-12581	5	7
129486-35210	3	4
129486-42021	10	14
	17	23
129486-42140	10	16
	17	24
129486-59551	13	63
129508-33010	9	21
129508-33031	9	21 -1
129508-33050	9	22
129508-33060	9	22 -1
129508-35100	9	24 -1
129508-35150	9	26 D
129508-49030	9	30
129604-53000	13	2
129604-53300	13	2 -1
129612-42350	10	24
129612-44700	10	25
129612-52100	14	13
129642-49180	9	37
129642-61060	12	91
129698-77020	15	2
129698-77190	15	13
129698-77200	15	14
129698-77220	15	16
129698-77230	15	17
129698-77250	15	18
129795-01780	3	19
129795-01900	16	1
129795-01950	2	8
129795-02412	1	9
129795-11120	4	24
129795-11180	4	25
129795-21661	8	9
129795-49551	10	31
	17	28
129900-07900	4	1
		1 -1
129902-77500	16	23 -1
129950-59311	14	8
129961-59110	14	10
129972-77341	16	22
129E00-13640	6	4 -1
158552-51080	11	8
158552-51151	7	17
158552-51571	11	60
		61
158552-51580	11	64
158552-51600	11	74

Parts No.	Fig. No.	Ref. No.
158552-51670	11	6
158552-51781	11	100
158552-52100	11	125
158552-52310	11	109
158552-52311	11	109 -1
158552-52400	11	110
158552-52500	11	126
158552-61441	12	24
158552-61900	12	82
158553-51551	11	4
158553-51630	11	75
158553-51650	11	77
158553-51660	11	78
158553-51670	11	69
158553-51680	11	79
158553-51770	11	106
158553-51930	11	105 -1
	12	66 -1
158553-61050	12	3
158553-61070	12	4
158557-51570	11	62
158563-51281	11	39
		40
158563-51330	11	50
158600-51270	11	38
158601-51550	11	58
158601-51570	11	63
158601-51650	11	5
158601-51770	11	99
158601-51790	11	101
171008-03990	9	31
		35
171031-11741	2	22
171051-01921	1	5
171056-49120	9	50
171301-77201	16	2
171350-13100	6	1
171353-44760	10	26
194940-52110	16	23
198360-52160	16	28
22190-080002	2	11
	9	45
		47
	17	21
22190-100002	9	48
	17	22
22190-120002	11	103
		111
		128
	12	64

Parts No.	Fig. No.	Ref. No.
22190-180002	11	104
		112
22190-220002	3	12
	17	7
22217-140000	7	18
	11	113
22252-000260	8	22
22312-050140	11	114
22351-030010	8	7
22351-050010	11	115
22351-060012	4	36
22512-070140	7	7
	8	5
22857-500100	4	50
		51
23080-015000	9	33
		38
23414-080000	10	18
	17	26
23857-030000	9	46
23887-120002	11	105
	12	66
24104-062010	16	6
24311-000070	11	117
24311-000120	4	53
	17	13
24311-000160	14	14 -2D
		21
24311-000320	2	12
		23
	4	54
	17	5
24321-000650	14	14 -2E
24321-000750	14	22
24341-000240	2	20
	17	6
24356-010180	11	118
24356-010200	11	72
		119
24356-190180	11	118 -1
24356-190200	11	72 -1
		119 -1
24372-000150	11	73
26106-060102	11	120
	12	68
26106-060122	10	44
	12	88 -1
		89 -1
26106-060142	12	88
		89

Parts No. Index

Parts No.	Fig. No.	Ref. No.
26106-060162	2	21
26106-060202	12	90
26106-060402	10	27
26106-080122	10	19
26106-080142	7	8
26106-080162	2	13
		14
	3	13
	4	2
	10	20
	11	131
	16	38
26106-080202	5	5
		9
	9	40
	11	132
26106-080222	10	32
26106-080252	3	14
	4	37
26106-080302	2	15
	14	3
26106-080352	3	21
	4	38
	9	20
26106-080402	7	14
26106-080452	3	15
		15 -1
	10	21
26106-080502	3	22
	4	39
26106-080552	2	16
26106-080602	10	22
26106-080802	5	6
26106-080852	2	17
26106-120252	15	24 -1
26116-120252	15	24
26206-100252	3	6
26206-100302	3	7
26306-080002	2	18
	6	6
26306-100002	16	19
26366-060002	9	49
26450-060252	9	15
26450-080452	11	122
26756-060002	12	69
26776-140002	7	19
	11	123
27241-120000	1	14
27241-300000	1	10
27241-400000	4	21

Parts No.	Fig. No.	Ref. No.
27310-080001	4	28
719803-01500	2	1
729005-01560	1	1
729005-92660	17	1
729239-51300	11	1
729239-51310	11	1 -1
729402-23100	8	23
729604-53200	13	1
729604-53400	13	1 -1
X2114535200	15	20
X2A07073KA	16	4
X3A08877KA	16	12
X417878	16	9
X4A07023KB	16	5
X4A07403K01	16	15
XM069000000	16	8
XM08137	16	3
XM219230000	16	17
XM329830000	16	7
XM67935	16	13
XM721740000	16	14
XM860250000	16	16
XM863720000	16	18
XYSPS400800	16	11
XYSPS402400	16	10

Parts No.	Fig. No.	Ref. No.

Parts No.	Fig. No.	Ref. No.