YANMAR

PARTS CATALOG

0CD11-M10400EN

Last update May., 2013

PREFACE

1. This parts catalog is the 1st edition of 3TNV88-BDRFU for FUJII DENKO.

Pub.No. : 0CD11-G10400
Published : March, 2010

2. Model name

Engine model	Vehicle	Vehicle made by
3TNV88-BDRFU	MOUNT LINER	FUJII DENKO

Directions for the Parts Catalog.

1.This Parts Catalog shows both standard and optional parts.
2.Parts may change without prior notice.
3.The following is an example of the Parts Catalog format.

0CF10-G21601 29. FUEL INJECTION PUMP(W/BOOST)

(A)=4JH-DT
(B)=4JH-DTZ
(C)=4JH-DTZP
(D)=4JH-DTZA
(E)=4JH-DTZY
(F)=

① REF.	② LEV.	PARTS NO.	DESCRIPTION	Q'TY (A)	(B)	(C)	(D)	(E)	(F)	③ I	⑤ R
1	1	729595-51390	FUEL INJECTION PUMP	1	1	1	1	1			1
1-1	1	729595-51391	FUEL INJECTION PUMP	1	1	1	1	1		N	1
	(A=E00185)	(B=E00200)									
3	2	26022-060162	SCREW M 6X 16	9	9	9	9	9			
3-1 ④	2	26022-060162	SCREW M 6X 16	4	4	4	4	4		K	
	(A=E00156)	(B=E00156)	(C=E00156) (D=E00156)	(E=E00156)							
4	2	129470-51040	CAMSHAFT	1	1	1	1	1			
5	2	122710-51050	BEARING, ROLLER	2	2	2	2	2			
6	2	129470-51060	RETAINER	1	1	1	1	1			

Remarks
(1) BOOST COMPEMSATOR TYPE. OPTIONAL
PART, TO E00155,(4JH-DT, 4JH-DTZ

①Ref. No.

The Ref. No. listed may not be in accordance with the illustration Ref. No.

(Ex.) Illustration No. 1 — List Ref No. 1 (Before change) → 1- 1 (After change)

For interchangeable symbols N, R and K, illustrations for new parts may be abbreviated.

②Lev. (Level)

Level indication
The numbers below indicate the level of relativity towards the main part.
1 ----- Main parts (Assembly parts)
2 ----- Sub component included in " 1 ".
3 ----- Sub component included in " 2 ".
Note) Parts that are not for sale are partially illustrated but not listed.

③Interchangeability Symbol

When a part change takes place, one of the following interchangeability symbols is indicated beside the part.

Symbol	Interchangeability	Contents note
N	Old ← Yes / → No New	New Part is interchangeable for Old Part but Old Part is not interchangeable for New Part.
Q	Old ← No / → Yes New	New Part is not interchangeable for Old Part but Old Part is interchangeable for New Part.
R	Old ← Yes / → Yes New	New/ Old Parts are both interchangeable.
S	Old ← No / → No New	New/ Old Parts are both not interchangeable.
W		Part newly added.
Z		Part discontinued.
F		Not interchangeable by a single part but interchangeable together with related parts.
K		Changes only for used parts quantities.

④Effective Machine No.

When a part changes, the effective Machine No. will be indicated in the (A)-(F) column.

Product Symbol	Product No.	Product Symbol	Product No.
C	Clutch No. Compressor No.	F	Machine No. (Agricultural Equip.)
D	Drive No.	M	Machine No.
E	Engine No.		

Note 1) A date may follow the symbol. (Ex.) 1996.01
Note 2) " XXXXX " and " ZZZZZ " are for parts that could not be predicted or for engine models that could not be identified.
Note 3) (A=E00185) is the E (Engine Serial Number) for the column (A) model (in this case 4JH-DT) after the parts design change.

⑤Remarks

Figures or alphabets (symbols) are entered in the remarks column.
The comments (remarks) on parts that are indicated at the bottom of the illustration are the same symbols as those stated above.

Contents

0CD11-M10400

Fig. No.	Fig. Name
3TNV88-BDRFU	
1.	CYLINDER BLOCK
2.	GEAR HOUSING
3.	FLYWHEEL HOUSING & OIL SUMP
4.	CYLINDER HEAD & BONNET
5.	SUCTION MANIFOLD
6.	EXHAUST MANIFOLD
7.	CAMSHAFT & DRIVING GEAR
8.	CRANKSHAFT & PISTON
9.	LUB.OIL SYSTEM
10.	COOLING WATER SYSTEM
11.	FUEL INJECTION PUMP
12.	GOVERNOR
13.	FUEL INJECTION VALVE
14.	FUEL LINE
15.	FUEL TANK
16.	STARTING MOTOR
17.	GENERATOR
18.	GASKET SET

Fig. No.	Fig. Name

Fig.1. CYLINDER BLOCK

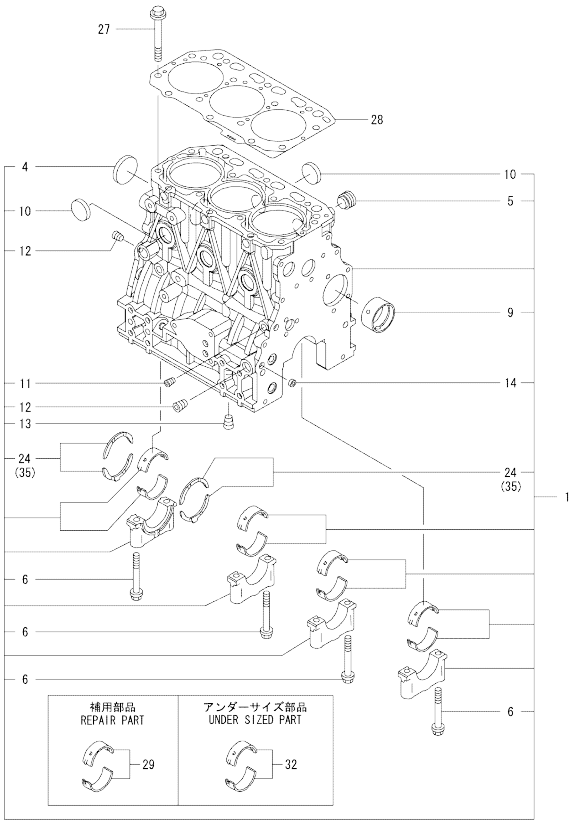

Remarks
(1)Repair part.
(2)Under sized(U.S.=0.25) part.
(3)Over sized(O.S.=0.25) part.

(A)=3TNV88-BDRFU (D)=
(B)= (E)=
(C)= (F)=

No.	Lev.	Parts No.	Description	Q'ty (A)	(B)	(C)	(D)	(E)	(F)	I	R
1	1	729005-01560	BLOCK ASSY, CYLINDER	1							
4	2	129001-01250	PLUG, 50	1							
5	2	171051-01921	PLUG, NPTF1	1							
6	2	129150-02020	BOLT, METAL CAP	8							
9	2	129795-02412	BUSH, CAMSHAFT	1							
10	2	27241-300000	PLUG 30	6							
11	2	124060-01050	PLUG, PT1/8	1							
12	2	124160-01910	PLUG, PT1/4	2							
13	2	124160-01910	PLUG, PT1/4	1							
14	2	27241-120000	PLUG, 12	2							
24	2	129150-02931	BEARING, THRUST	2							
27	1	129150-01200	BOLT, HEAD	14							
28	1	129001-01340	GASKET, HEAD	1							
29	1	129001-02931	BEARING, MAIN	4							1
32	1	129150-02871	BEARING, 0.25 US	4							2
35	1	129150-02941	BEARING, THRUST 0.25	1							3

N:Old ◄Yes/No► New. Q:Old ◄No/Yes► New. R:Old ◄Yes/Yes► New. S:Old ◄No/No► New. W:Add. Z:Discontinued. F:Interchangeable by set. K:Q'ty Change

Copyright (C) YANMAR GLOBAL CS CO., LTD. All RightsReserved.

Fig.2. GEAR HOUSING

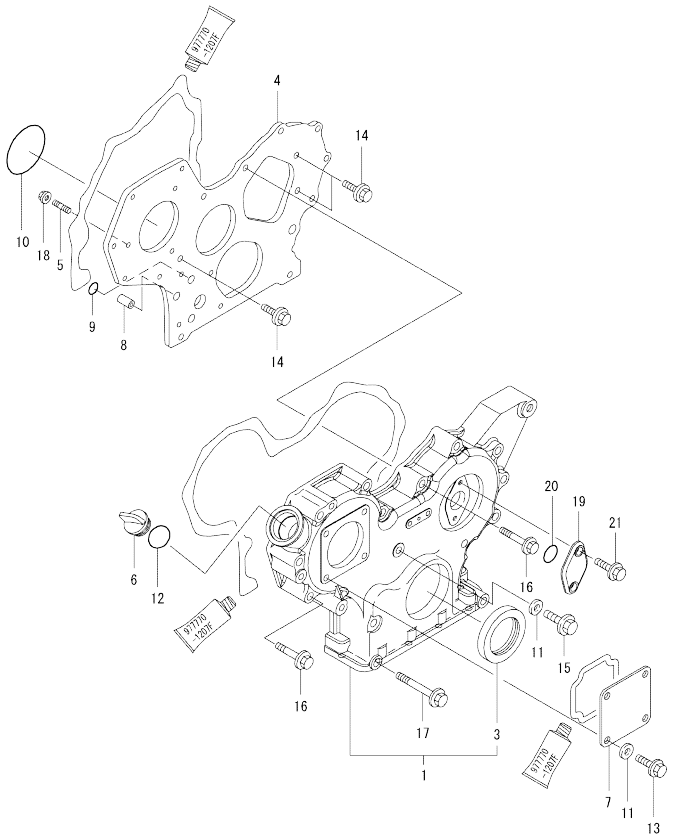

(A)=3TNV88-BDRFU (D)=
(B)= (E)=
(C)= (F)=

No.	Lev.	Parts No.	Description	Q'ty (A)	(B)	(C)	(D)	(E)	(F)	I	R
1	1	719803-01500	CASE ASSY, GEAR	1							
3	2	119934-01800	SEAL, OIL	1							
4	1	119803-01520	FLANGE, GEAR CASE	1							
5	1	119802-01561	STUD, M8X25	3							
6	1	124160-01751	COVER, FILLER	1							
7	1	124240-01871	COVER	1							
8	1	129795-01950	PIPE, KNOCK L=18	2							
9	1	119609-32040	O-RING, P16	2							
10	1	121850-51960	O-RING	1							
11	1	22190-080002	WASHER, SEAL 6	5							
12	1	24311-000320	O-RING, 1AP32.0	1							
13	1	26106-080162	BOLT, M8X 16 PLATED	4							
14	1	26106-080162	BOLT, M8X 16 PLATED	3							
15	1	26106-080302	BOLT, M8X 30 PLATED	1							
16	1	26106-080552	BOLT, M8X 55 PLATED	12							
17	1	26106-080852	BOLT, M8X 85 PLATED	3							
18	1	26306-080002	NUT, M8	3							
19	1	129150-91400	GEAR	1							
20	2	24341-000240	O-RING, 1AS24.0	1							
21	1	26106-060162	BOLT, M6X 16 PLATED	2							

N:Old ←Yes/No→ New. Q:Old ←No/Yes→ New. R:Old ←Yes/Yes→ New. S:Old ←No/No→ New. W:Add. Z:Discontinued. F:Interchangeable by set. K:Q'ty Change

Copyright (C) YANMAR GLOBAL CS CO., LTD. All RightsReserved.

Fig.3. FLYWHEEL HOUSING & OIL SUMP

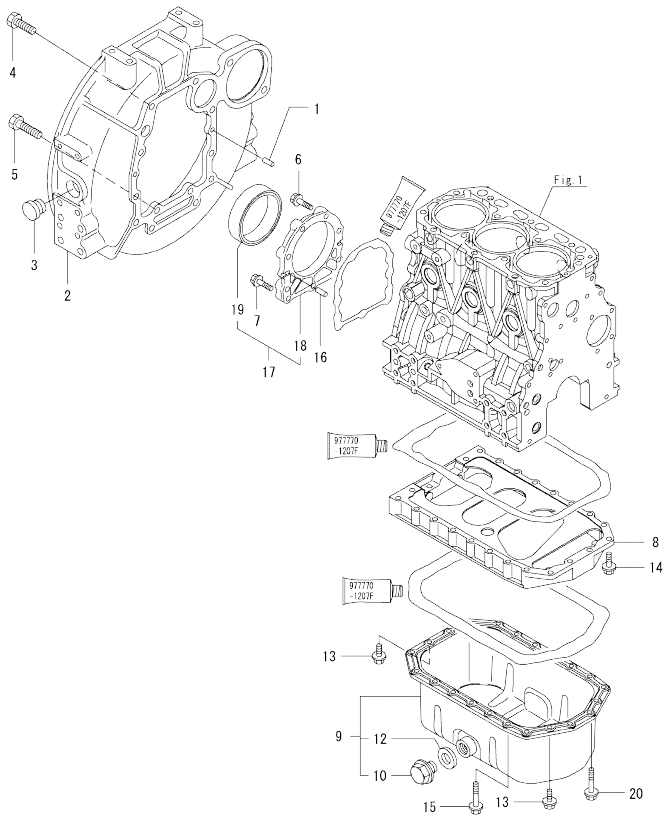

(A)=3TNV88-BDRFU (D)=
(B)= (E)=
(C)= (F)=

No.	Lev.	Parts No.	Description	Q'ty (A)	(B)	(C)	(D)	(E)	(F)	I	R
1	1	129100-01580	PIN, M8X16	2							
2	1	171440-01600	HOUSING, FLYWHEEL	1							
3	1	119620-01750	CAP	1							
4	1	26206-100252	BOLT, M10X 25 PLATED	6							
5	1	26206-100302	BOLT, M10X 30 PLATED	4							
6	1	129486-01670	BOLT, M8X30	6							
7	1	26106-080352	BOLT, M8X 35 PLATED	3							
8	1	129100-01730	SPACER, OIL SUMP	1							
9	1	129100-01760	SUMP ASSY, OIL	1							
10	2	119640-01640	PLUG, DRAIN M22	1							
12	2	22190-220002	WASHER, SEAL 22	1							
13	1	26106-080162	BOLT, M8X 16 PLATED	4							
14	1	26106-080252	BOLT, M8X 25 PLATED	2							
15	1	26106-080452	BOLT, M8X 45 PLATED	16							
16	1	129100-01580	PIN, M8X16	2							
17	1	129100-01640	CASE ASSY, OIL SEAL	1							
18	2	129150-01650	CASE, OIL SEAL	1							
19	2	129795-01780	SEAL, OIL	1							
20	1	26106-080502	BOLT, M8X 50 PLATED	4							

N:Old ←Yes/No→ New. Q:Old ←No/Yes→ New. R:Old ←Yes/Yes→ New. S:Old ←No/No→ New. W:Add. Z:Discontinued. F:Interchangeable by set. K:Q'ty Change

Copyright (C) YANMAR GLOBAL CS CO., LTD. All RightsReserved.

Fig.4. CYLINDER HEAD & BONNET

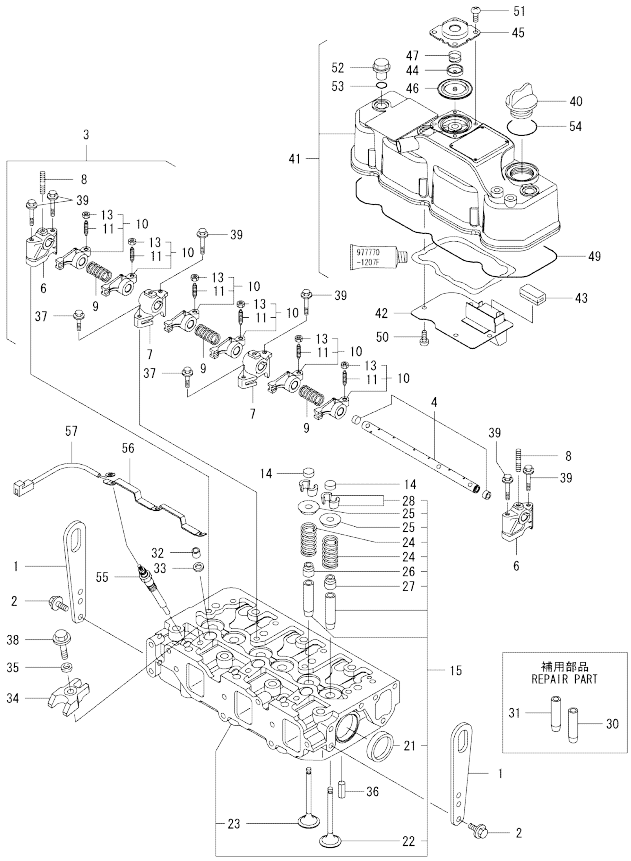

(A)=3TNV88-BDRFU
(B)=
(C)=
(D)=
(E)=
(F)=

No.	Lev.	Parts No.	Description	Q'ty (A)	(B)	(C)	(D)	(E)	(F)	I	R
1	1	129900-07900	LIFTER	2							
2	1	26106-080162	BOLT, M8X 16 PLATED	4							
3	1	129004-11241	SHAFT ASSY, ROCKER	1							
4	2	129004-11251	SHAFT, ROCKER ARM	1							
6	2	119802-11260	SUPPORT, ROCKER ARM	2							
7	2	119802-11270	SUPPORT, ROCKER ARM	2							
8	2	119802-11280	STUD	3							
9	2	129150-11280	SPRING	3							
10	2	129004-11650	ARM, ROCKER	6							
11	3	129150-11230	SCREW, VALVE ADJUST	6							
13	3	129150-11750	NUT, M8	6							
14	1	129150-11370	CAP, VALVE	6							
15	1	129008-11700	HEAD ASSY, CYLINDER	1							
21	2	27241-400000	PLUG, 40	2							
22	2	129005-11100	VALVE, INTAKE	3							
23	2	129100-11112	VALVE, EXHAUST	3							
24	2	129795-11120	SPRING, VALVE	6							
25	2	129795-11180	RETAINER, SPRING	6							
26	2	121400-11340	SEAL, VALVE STEM	3							
27	2	124460-11340	SEAL, VALVE STEM	3							
28	2	27310-080001	COTTER, 8	6							
30	1	120130-11860	GUIDE, VALVE	3							1
31	1	129150-11810	GUIDE, VALVE	3							1
32	1	119802-11870	PROTECTOR, NOZZLE	3							
33	1	119625-11880	SEAT, NOZZLE	3							
34	1	129004-11900	RETAINER, NOZZLE	3							
35	1	120270-54410	WASHER, INJECTOR	3							
36	1	22351-060012	PIN, SPRING 6.0X12	2							
37	1	26106-080252	BOLT, M8X 25 PLATED	2							
38	1	26106-080352	BOLT, M8X 35 PLATED	3							
39	1	26106-080502	BOLT, M8X 50 PLATED	6							
40	1	124160-01751	COVER, FILLER	1							
41	1	129004-11350	BONNET ASSY, HEAD	1							
42	2	129004-03010	PLATE	1							
43	2	129150-03070	BAFFLE, BREATHER	1							
44	2	119802-03110	PLATE	1							
45	2	119802-03121	COVER, DIAPHRAGM	1							
46	2	119802-03130	DIAPHRAGM	1							
47	2	119802-03141	SPRING, DIAPHRAGM	1							
49	2	129004-11310	GASKET, BONNET	1							
50	2	22857-500100	SCREW, 5X10	4							
51	2	22857-500100	SCREW, 5X10	4							
52	1	124160-11360	KNOB	3							
53	1	24311-000120	O-RING, 1AP12.0	3							
54	1	24311-000320	O-RING, 1AP32.0	1							
55	1	129008-77800	PLUG, GLOW	3							
56	1	129008-77820	CONNECTOR, GLOW PLUG	1							
57	1	119803-77830	HARNESS, WIRE	1							

Remarks
(1)Repair part.

N:Old $\frac{\text{Yes}}{\text{No}}$ New. Q:Old $\frac{\text{No}}{\text{Yes}}$ New. R:Old $\frac{\text{Yes}}{\text{Yes}}$ New. S:Old $\frac{\text{No}}{\text{No}}$ New. W:Add. Z:Discontinued. F:Interchangeable by set. K:Q'ty Change

Copyright (C) YANMAR GLOBAL CS CO., LTD. All RightsReserved.

Fig.5. SUCTION MANIFOLD

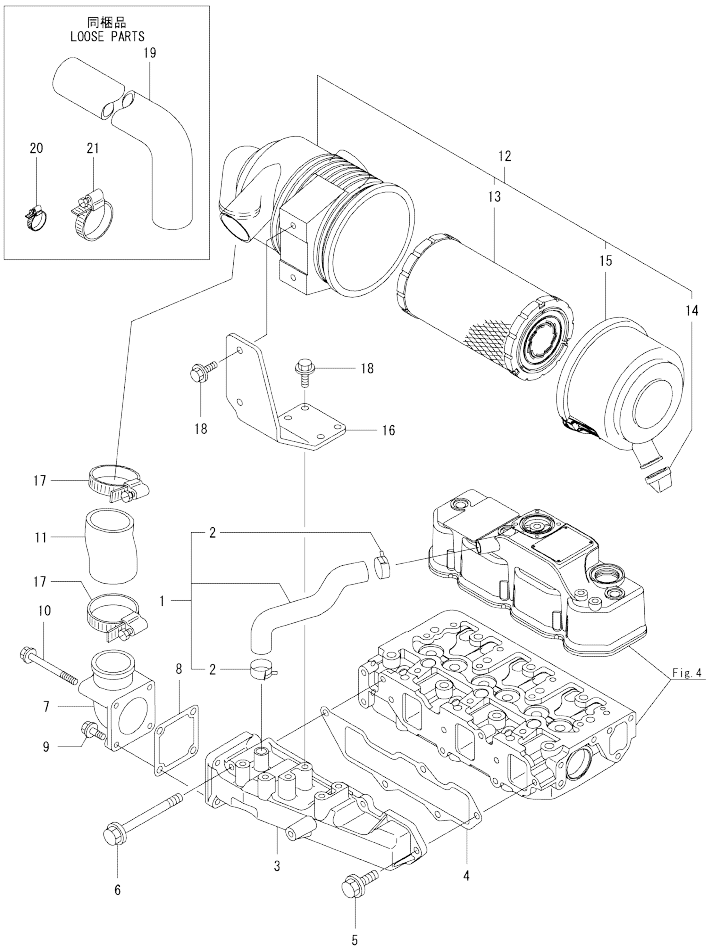

(A)=3TNV88-BDRFU (D)=
(B)= (E)=
(C)= (F)=

No.	Lev.	Parts No.	Description	Q'ty (A)	(B)	(C)	(D)	(E)	(F)	I	R
1	1	129004-03080	PIPE , BREATHER	1							
2	2	129410-03990	CLAMP 22	2							
3	1	129004-12101	MANIFOLD, AIR INTAKE	1							
4	1	129001-12110	GASKET, MANIFOLD	1							
5	1	26106-080202	BOLT, M8X 20 PLATED	4							
6	1	26106-080802	BOLT, M8X 80 PLATED	1							
7	1	119803-77520	BEND, AIR HEATER	1							
8	1	129150-77511	GASKET	1							
9	1	26106-080202	BOLT, M8X 20 PLATED	2							
10	1	26106-080802	BOLT, M8X 80 PLATED	2							
11	1	119910-12210	PIPE, AIR INTAKE	1							
12	1	119802-12500	CLEANER ASSY, AIR	1							
13	2	119808-12520	ELEMENT	1							
14	2	119808-12540	VALVE, UNLOADER	1							
15	2	119866-12541	COVER ASSY	1							
16	1	119802-12560	BRACKET, AIR CLEANER	1							
17	1	23000-070000	CLAMP, 70	2							
18	1	26013-080222	BOLT, M8X 22	6							
19	1	119823-12210	PIPE, AIR INTAKE	2							
20	1	23000-013000	CLAMP, 13	10							
21	1	23000-070000	CLAMP, 70	3							

N:Old ←Yes/No→ New. Q:Old ←No/Yes→ New, R:Old ←Yes/Yes→ New, S:Old ←No/No→ New, W:Add, Z:Discontinued, F:Interchangeable by set, K:Q'ty Change

Copyright (C) YANMAR GLOBAL CS CO., LTD. All RightsReserved.

Fig.6. EXHAUST MANIFOLD

(A)=3TNV88-BDRFU (D)=
(B)= (E)=
(C)= (F)=

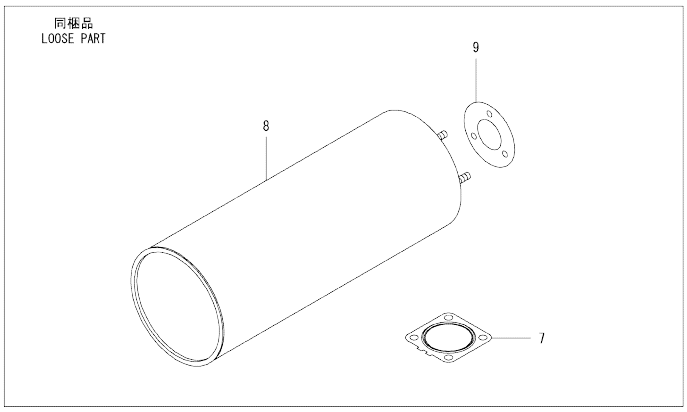

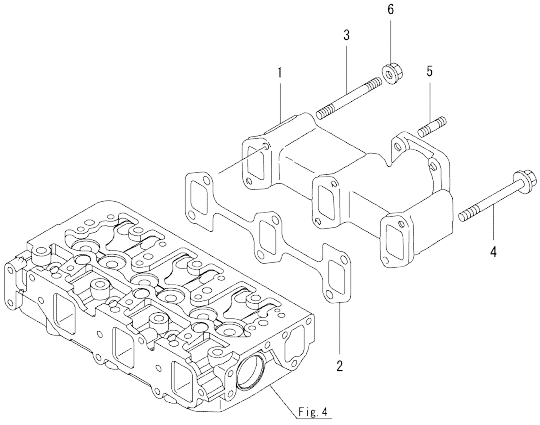

No.	Lev.	Parts No.	Description	Q'ty (A)	(B)	(C)	(D)	(E)	(F)	I	R
1	1	129100-13110	MANIFOLD, EXHAUST	1							
2	1	129150-13110	GASKET	1							
3	1	123900-13610	STUD, M8X80	2							
4	1	123900-13630	BOLT, M8X80	4							
5	1	119131-18320	STUD, M8X22	4							
6	1	26306-080002	NUT, M8	2							
7	1	129004-13200	GASKET, SILENCER	1							
8	1	129136-13530	SILENCER	1							
9	1	103954-13201	GASKET, SILENCER	1							

N:Old ◄Yes/No► New. Q:Old ◄No/Yes► New. R:Old ◄Yes/Yes► New. S:Old ◄No/No► New. W:Add. Z:Discontinued. F:Interchangeable by set. K:Q'ty Change

Copyright (C) YANMAR GLOBAL CS CO., LTD. All RightsReserved.

Fig.7. CAMSHAFT & DRIVING GEAR

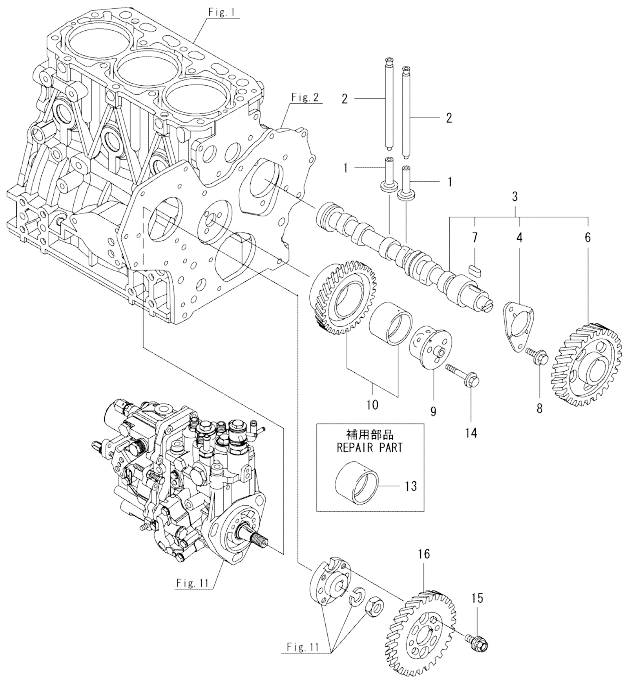

(A)=3TNV88-BDRFU (D)=
(B)= (E)=
(C)= (F)=

No.	Lev.	Parts No.	Description	Q'ty (A)	(B)	(C)	(D)	(E)	(F)	I	R
1	1	129150-14200	TAPPET	6							
2	1	129150-14400	ROD, PUSH L=178	6							
3	1	129129-14580	CAMSHAFT ASSY	1							
4	2	129150-02450	BEARING, THRUST	1							
6	2	129150-14101	GEAR, CAMSHAFT	1							
7	2	22512-070140	KEY, 7X 14	1							
8	1	26106-080142	BOLT, M8X 14 PLATED	2							
9	1	119803-25050	SHAFT, IDLE	1							
10	1	119802-25101	GEAR ASSY, IDLE	1							
13	1	119802-25071	BUSH, IDLE GEAR	1							1
14	1	26106-080402	BOLT, M8X 40 PLATED	3							
15	1	129150-25301	BOLT	4							
16	1	119802-25901	GEAR, PUMP	1							

Remarks
(1)Repair part.

N:Old $\frac{\text{Yes}}{\text{No}}$ New. Q:Old $\frac{\text{No}}{\text{Yes}}$ New. R:Old $\frac{\text{Yes}}{\text{Yes}}$ New. S:Old $\frac{\text{No}}{\text{No}}$ New. W:Add. Z:Discontinued. F:Interchangeable by set. K:Q'ty Change

Copyright (C) YANMAR GLOBAL CS CO., LTD. All RightsReserved.

Fig.8. CRANKSHAFT & PISTON

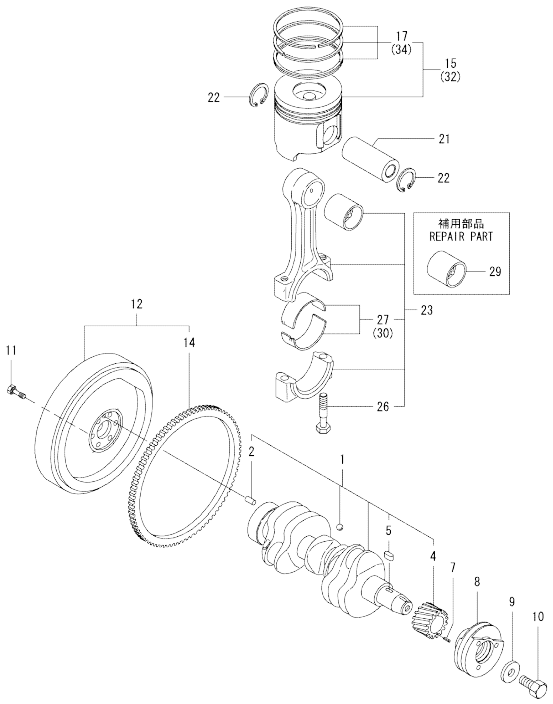

(A)=3TNV88-BDRFU (D)=
(B)= (E)=
(C)= (F)=

No.	Lev.	Parts No.	Description	Q'ty (A)	(B)	(C)	(D)	(E)	(F)	I	R
1	1	129008-21000	CRANKSHAFT ASSY	1							
2	2	129100-01580	PIN, M8X16	1							
4	2	119803-21200	GEAR, CRANKSHAFT	1							
5	2	22512-070140	KEY, 7X 14	1							
7	1	22351-030010	PIN, SPRING 3.0X10	1							
8	1	129004-21650	V-PULLEY, 110	1							
9	1	129795-21661	WASHER	1							
10	1	121850-21680	BOLT	1							
11	1	121111-21501	BOLT, FLYWHEEL	6							
12	1	129132-21590	FLYWHEEL ASSY	1							
14	2	124550-21600	GEAR, RING	1							
15	1	129005-22080	PISTON ASSY	3							
17	2	129005-22500	RING SET, PISTON	3							
21	1	129202-22300	PIN, PISTON D26 L70	3							
22	1	22252-000260	RING, 26	6							
23	1	729402-23100	ROD ASSY, CONNECTING	3							
26	2	121550-23200	BOLT, CONNECTING ROD	6							
27	2	129150-23601	BEARING, CRANK PIN	3							
29	1	129100-23910	BEARING, PISTON PIN	3							1
30	1	129150-23611	BEARING, 0.25 US	3							2
32	1	129005-22900	PISTON ASSY, 0.25 OS	3							3
34	2	129005-22950	RING SET, 0.25 OS	3							3

Remarks
(1)Repair part.
(2)Under sized(U.S.=0.25) part.
(3)Over sized(O.S.=0.25) part.

N:Old ←Yes/No→ New. Q:Old ←No/Yes→ New. R:Old ←Yes/Yes→ New. S:Old ←No/No→ New. W:Add. Z:Discontinued. F:Interchangeable by set. K:Q'ty Change

Copyright (C) YANMAR GLOBAL CS CO., LTD. All RightsReserved.

Fig.9. LUB.OIL SYSTEM

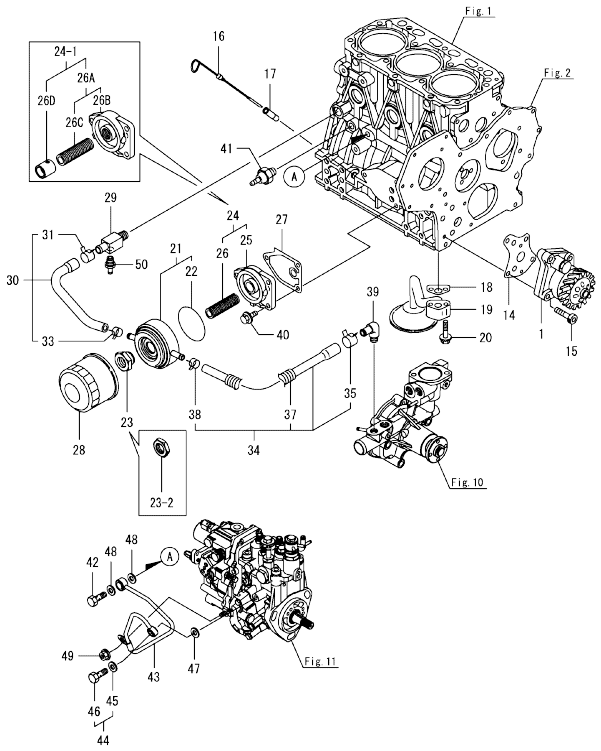

(A)=3TNV88-BDRFU (D)=
(B)= (E)=
(C)= (F)=

No.	Lev.	Parts No.	Description	Q'ty (A)	(B)	(C)	(D)	(E)	(F)	I	R
1	1	129001-32001	PUMP ASSY, OIL	1							
14	1	129150-32020	GASKET, PUMP	1							
15	1	26450-060252	BOLT, M6X 25	4							
16	1	129239-34800	DIPSTICK, LUB.OIL	1							
17	1	121520-34810	GUIDE, DIPSTICK	1							
18	1	129150-35042	GASKET	1							
19	1	129100-35301	PIPE ASSY, OIL INLET	1							
20	1	26106-080352	BOLT, M8X 35 PLATED	2							
21	1	129508-33010	COOLER ASSY, OIL	1							
21-1	1	129508-33031	COOLER ASSY, OIL	1						R	
	(A=E158865)										
22	2	129508-33050	O-RING	1							
22-1	2	129508-33060	GASKET, COOLER	1						R	
	(A=E158865)										
23	1	129417-33110	NUT	1							
23-1	1	129417-33111	NUT, OIL COOLER	1						R	
	(A=EM0888)										
23-2	1	124085-35350	NUT, M20	1						F	2
	(A=E158865)										
24	1	129006-35100	BRACKET ASSY, FILTER	1							
24-1	1	129508-35100	BRACKET ASSY,LO FILT	1						F	2
	(A=E158865)										
25	2	119802-35110	BRACKET, FILTER	1						Z	
	(A=E158865)										
26	2	129417-35150	BOLT, STUD M20X67	1						Z	
	(A=E158865)										
26A	2	129006-35100	BRACKET ASSY, FILTER	1						W	
	(A=E158865)										
26B	3	119802-35110	BRACKET, FILTER	1						W	
	(A=E158865)										
26C	3	129417-35150	STUD, M20X67	1						W	
	(A=E158865)										
26D	2	129508-35150	COLLAR, OIL-COOLER	1						W	
	(A=E158865)										
27	1	129150-35111	GASKET	1							
28	1	129150-35153	FILTER ASSY, D80X80L	1							1
29	1	129006-44480	JOINT	1							
30	1	129508-49030	HOSE ASSY, WATER	1							
31	2	171008-03990	CLAMP, HOSE 18.5	1							
33	2	23080-015000	CLAMP, 15	1							
34	1	129006-49040	HOSE ASSY, WATER	1							
35	2	171008-03990	CLAMP, HOSE 18.5	1							
37	2	129642-49180	TUBE, CORRUGATED 19	1							
38	2	23080-015000	CLAMP, 15	1							
39	1	129103-49301	ELBOW, PT1/4	1							
40	1	26106-080202	BOLT, M8X 20 PLATED	3							
41	1	114250-39450	SWITCH, HYDRAULIC	1							
42	1	124160-39140	BOLT, PIPE JOINT M10	1							
43	1	119802-39450	PIPE ASSY, OIL	1							
44	1	129005-59830	BOLT ASSY, JOINT M8	1							
45	2	22190-080002	WASHER, SEAL 6	1							

Remarks
(1)Repair part.
(2)Interchangeable by simultaneous replacement with No.23-2, 24-1.

N:Old ←Yes/No→ New. Q:Old ←No/Yes→ New. R:Old ←Yes/Yes→ New. S:Old ←No/No→ New. W:Add. Z:Discontinued. F:Interchangeable by set. K:Q'ty Change

++ CONTINUE ++

Copyright (C) YANMAR GLOBAL CS CO., LTD. All RightsReserved.

Fig.9. LUB.OIL SYSTEM

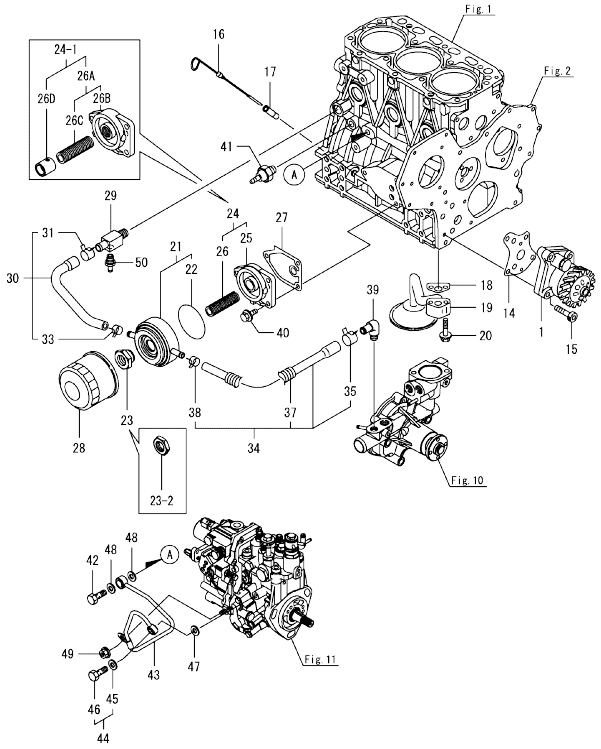

Remarks
(1)Repair part.
(2)Interchangeable by simultaneous replacement with No.23-2, 24-1.

(A)=3TNV88-BDRFU (D)=
(B)= (E)=
(C)= (F)=

No.	Lev.	Parts No.	Description	Q'ty (A)	(B)	(C)	(D)	(E)	(F)	I	R
46	2	23857-030000	BOLT, JOINT 3	1							
47	1	22190-080002	WASHER, SEAL 6	1							
48	1	22190-100002	WASHER, SEAL 10	2							
49	1	26366-060002	NUT, M6	1							
50	1	121550-49111	JOINT, PT1/4	1							

N:Old ◄Yes/No► New. Q:Old ◄No/Yes► New. R:Old ◄Yes/Yes► New. S:Old ◄No/No► New. W:Add. Z:Discontinued. F:Interchangeable by set. K:Q'ty Change

Copyright (C) YANMAR GLOBAL CS CO., LTD. All RightsReserved.

Fig.10. COOLING WATER SYSTEM

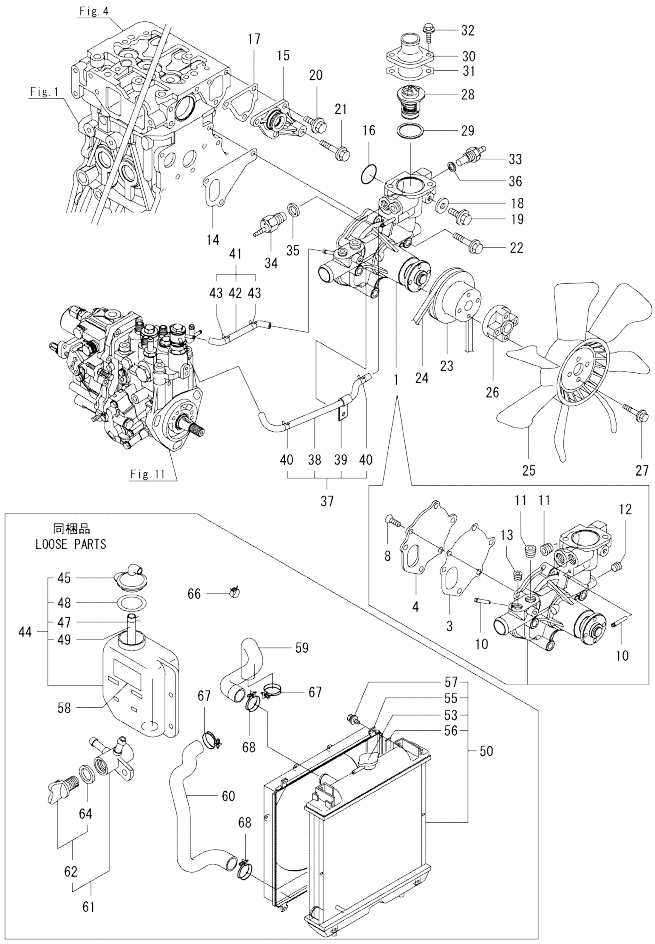

(A)=3TNV88-BDRFU (D)=
(B)= (E)=
(C)= (F)=

No.	Lev.	Parts No.	Description	Q'ty (A)	(B)	(C)	(D)	(E)	(F)	I	R
1	1	129004-42001	PUMP ASSY, WATER	1							
3	2	129100-42051	GASKET, WATER PUMP	1							
4	2	129100-42121	PLATE, PUMP	1							
8	2	26577-060142	SCREW, 6 X 14	3							
10	2	119802-49113	JOINT, PIPE	2							
11	2	129916-49740	PLUG, R3/8	2							
12	2	23876-010000	PLUG, R01	1							
13	2	23875-020000	PLUG, R02	1							
14	1	129486-42021	GASKET, WATER PUMP	1							
15	1	129004-42040	JOINT	1							
16	1	129486-42140	O-RING, G30	1							
17	1	124395-49840	GASKET, THERMOSTAT	1							
18	1	23414-080000	GASKET, 8X1.0	1							
19	1	26106-080122	BOLT, M8X 12 PLATED	1							
20	1	26106-080162	BOLT, M8X 16 PLATED	3							
21	1	26106-080452	BOLT, M8X 45 PLATED	1							
22	1	26106-080602	BOLT, M8X 60 PLATED	3							
23	1	129403-42380	V-PULLEY, D=110	1							
24	1	25132-003800	V-BELT, A38	1							
25	1	129120-44741	FAN, COOLING D=360	1							
26	1	121267-44760	SPACER, FAN 18MM	1							
27	1	26106-060302	BOLT, M6X 30 PLATED	4							
28	1	129155-49801	THERMOSTAT, 71C	1							
29	1	129150-49811	GASKET, THERMOSTAT	1							
30	1	129350-49530-1	COVER, THERMOSTAT	1							
31	1	129795-49551	GASKET	1							
32	1	26106-080222	BOLT, M8X 22 PLATED	2							
33	1	124250-49351	SENSOR, WATER TEMP.	1							
34	1	121250-44901	SWITCH, THERMO 110	1							
35	1	124465-44950	GASKET, 16	1							
36	1	129150-49360	GASKET	1							
37	1	129004-49610	HOSE ASSY, WATER	1							
38	2	129004-49711	HOSE, WATER	1							
39	2	119802-49730	RETAINER, PIPE	1							
40	2	124722-59050	CLAMP, HOSE 9	2							
41	1	129004-49620	HOSE ASSY, WATER	1							
42	2	129004-49721	HOSE, WATER	1							
43	2	124722-59050	CLAMP, HOSE 9	2							
44	1	121468-44520	TANK ASSY, SUB	1							
45	2	121450-44531	CAP	1							
47	2	124450-44560	CLAMP, HOSE	1							
48	2	121470-44581	GASKET	1							
49	2	23065-070130	PIPE, 7X 130	1							
50	1	129044-44520	RADIATOR ASSY	1							
53	2	129107-44590	CAP, RADIATOR	1							
55	2	129044-44600	SHROUD	1							
56	2	129601-44610	GASKET	2							
57	2	26014-060122	BOLT, M6X 12	4							
58	1	121470-44540	LABEL, SUB TANK	1							
59	1	129602-49010	HOSE, WATER	1							
60	1	129612-49040	HOSE, WATER	1							

N:Old ←Yes/No→ New. Q:Old ←No/Yes→ New. R:Old ←Yes/Yes→ New. S:Old ←No/No→ New. W:Add. Z:Discontinued. F:Interchangeable by set. K:Q'ty Change

++ CONTINUE ++

Copyright (C) YANMAR GLOBAL CS CO., LTD. All RightsReserved.

Fig.10. COOLING WATER SYSTEM

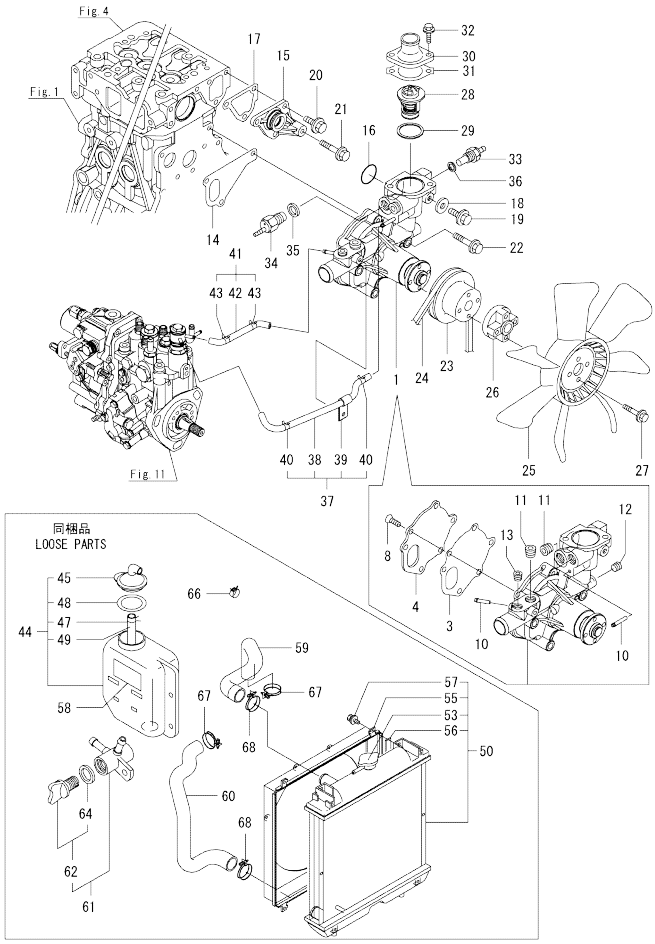

(A)=3TNV88-BDRFU (D)=
(B)= (E)=
(C)= (F)=

No.	Lev.	Parts No.	Description	Q'ty (A)	(B)	(C)	(D)	(E)	(F)	I	R
61	1	129150-49100	COCK ASSY, 3-WAY	1							
62	2	129150-49080	COCK, DRAIN	1							
64	3	119629-49080	GASKET	1							
66	1	124066-59100	CLAMP, HOSE 8	2							
67	1	23010-038000	CLAMP, 38	2							
68	1	23010-044000	CLAMP, 44	2							

N:Old ←Yes/No→ New. Q:Old ←No/Yes→ New. R:Old ←Yes/Yes→ New. S:Old ←No/No→ New. W:Add. Z:Discontinued. F:Interchangeable by set. K:Q'ty Change

Copyright (C) YANMAR GLOBAL CS CO., LTD. All RightsReserved.

Fig.11. FUEL INJECTION PUMP

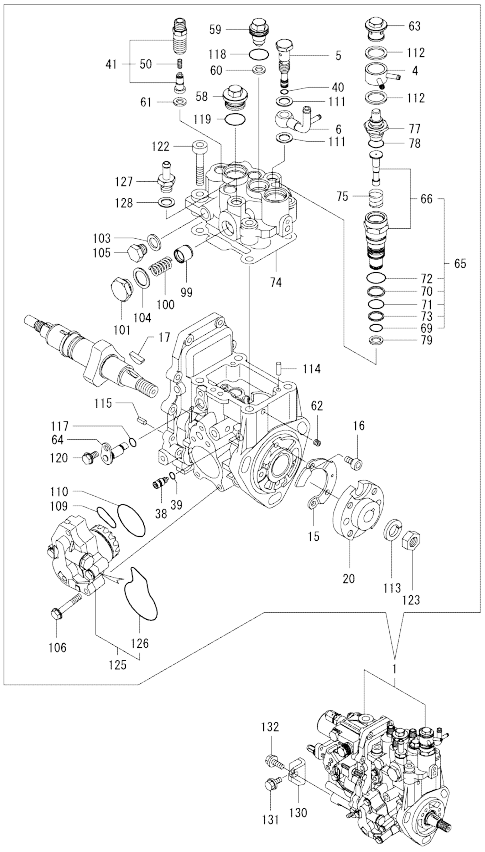

Remarks
(1)Governor(Fig.12) is incorporated
in the fuel injection pump assy
(Ref.No.1).

(A)=3TNV88-BDRFU (D)=
(B)= (E)=
(C)= (F)=

No.	Lev.	Parts No.	Description	Q'ty (A)	(B)	(C)	(D)	(E)	(F)	I	R
1	1	729239-51320	PUMP ASSY, INJECTION	1							1
4	2	158553-51551	JOINT	1							
5	2	158601-51650	JOINT, OVER FLOW	1							
6	2	158552-51670	JOINT, OVER FLOW	1							
15	2	129008-51900	COVER, GEAR CASE	1							
16	2	129008-51920	BOLT, M6X10	2							
17	2	119802-51090	KEY, 4X16	1							
20	2	158552-51151	FLANGE	1							
38	2	158600-51270	STOPPER, TAPPET	1							
39	2	158563-51281	O-RING, 4D S6	1							
40	2	158563-51281	O-RING, 4D S6	1							
41	2	129008-51390	VALVE ASSY, DELIVERY	3							
50	3	158563-51330	SPRING, DELIVERY	3							
58	2	158601-51550	PLUG	1							
59	2	119802-51560	PLUG, BARREL	1							
60	2	158552-51571	GASKET	1							
61	2	158552-51571	GASKET	3							
62	2	158557-51570	PLUG	1							
63	2	158601-51570	PLUG	1							
64	2	158552-51580	LIFTER	1							
65	2	119802-51590	TIMER SET	1							
66	3	119802-51600	TIMER ASSY	1							
69	3	158553-51670	O-RING, 1011	1							
70	3	119802-51680	RING, BACK UP	1							
71	3	119802-51690	O-RING	1							
72	3	24356-190200	O-RING, 4D19020	1							
73	3	24372-000150	RING, BACK UP T2P15	1							
74	2	158552-51600	GASKET	1							
75	2	158553-51630	SPRING, TIMER	1							
77	2	158553-51650	ELEMENT	1							
78	2	158553-51660	O-RING, P14	1							
79	2	158553-51680	GASKET	1							
99	2	158601-51770	PISTON	1							
100	2	158552-51781	SPRING	1							
101	2	158601-51790	PLUG	1							
103	2	22190-120002	WASHER, SEAL 12	1							
104	2	22190-180002	WASHER, SEAL 18	1							
105	2	158553-51930	PLUG, M12	1							
106	2	158553-51770	BOLT	4							
109	2	158552-52311	O-RING	1							
110	2	158552-52400	O-RING, 4E S42	1							
111	2	22190-120002	WASHER, SEAL 12	2							
112	2	22190-180002	WASHER, SEAL 18	2							
113	2	22217-140000	WASHER, SPRING 14	1							
114	2	22312-050140	PIN, PARALLEL M5X14	2							
115	2	22351-050010	PIN, SPRING 5.0X10	2							
117	2	24311-000070	O-RING, 1AP7.0	1							
118	2	24356-190180	O-RING, 4D19018	1							
119	2	24356-190200	O-RING, 4D19020	1							
120	2	26106-060102	BOLT, M6X 10 PLATED	1							
122	2	26450-080452	BOLT, M8X 45	4							

N:Old ◄Yes/No► New. Q:Old ◄No/Yes► New. R:Old ◄Yes/Yes► New. S:Old ◄No/No► New. W:Add. Z:Discontinued. F:Interchangeable by set. K:Q'ty Change

++ CONTINUE ++

Copyright (C) YANMAR GLOBAL CS CO., LTD. All RightsReserved.

Fig.11. FUEL INJECTION PUMP

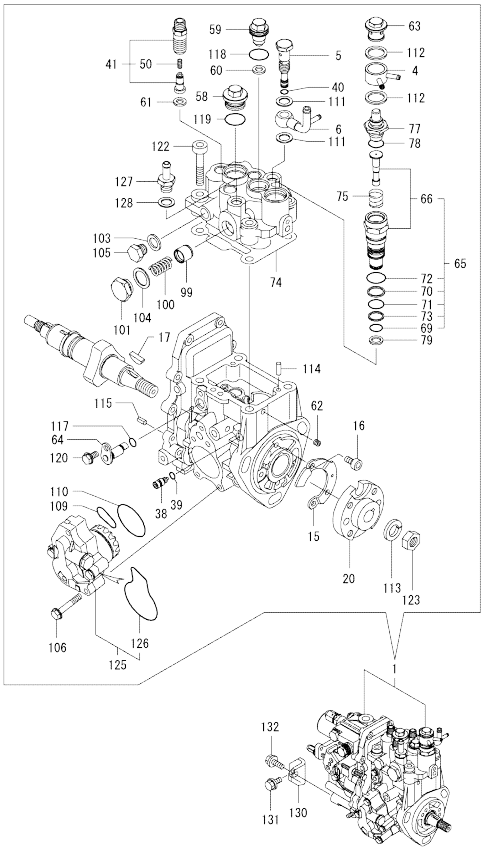

Remarks
(1)Governor(Fig.12) is incorporated
in the fuel injection pump assy
(Ref.No.1).

(A)=3TNV88-BDRFU (D)=
(B)= (E)=
(C)= (F)=

No.	Lev.	Parts No.	Description	Q'ty (A)	(B)	(C)	(D)	(E)	(F)	I	R
123	2	26776-140002	NUT, LOCK M14	1							
125	2	158552-52100	PUMP ASSY, FUEL FEED	1							
126	3	158552-52500	O-RING	1							
127	2	119934-59910	JOINT, PIPE	1							
128	2	22190-120002	WASHER, SEAL 12	1							
130	1	119802-51250	RETAINER, PUMP	1							
131	1	26106-080162	BOLT, M8X 16 PLATED	1							
132	1	26106-080202	BOLT, M8X 20 PLATED	1							

N:Old ←Yes/No→ New. Q:Old ←No/Yes→ New. R:Old ←Yes/Yes→ New. S:Old ←No/No→ New. W:Add. Z:Discontinued. F:Interchangeable by set. K:Q'ty Change

Copyright (C) YANMAR GLOBAL CS CO., LTD. All RightsReserved.

Fig.12. GOVERNOR

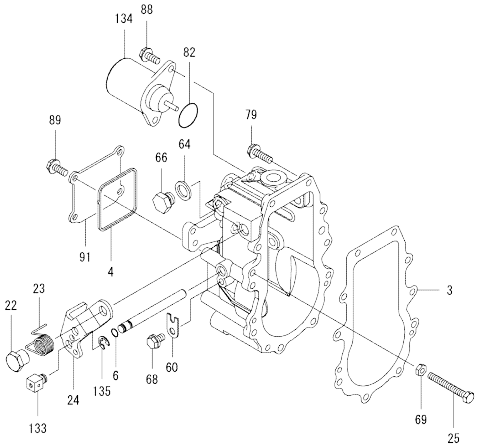

Remarks
* This figure(Governor) is incorporated in the fuel injection pump(Fig.11).

(A)=3TNV88-BDRFU (D)=
(B)= (E)=
(C)= (F)=

No.	Lev.	Parts No.	Description	Q'ty (A)	(B)	(C)	(D)	(E)	(F)	I	R
3	2	158553-61050	GASKET	1							
4	2	158553-61070	GASKET	1							
6	2	129155-51280	O-RING, S6	1							
22	2	129255-61410	NUT, LOCK	1							
23	2	119807-61420	SPRING, RETURN	1							
24	2	158552-61441	LEVER, REGULATOR	1							
25	2	129155-61460	BOLT, IDLE	1							
60	2	119660-61901	RETAINER, SHAFT	1							
64	2	22190-120002	WASHER, SEAL 12	1							
66	2	158553-51930	PLUG, M12	1							
68	2	26106-060102	BOLT, M6X 10 PLATED	1							
69	2	26756-060002	NUT, LOCK M6	1							
79	2	26106-060202	BOLT, M6X 20 PLATED	10							
82	2	158552-61900	O-RING	1							
88	2	26106-060142	BOLT, M6X 14 PLATED	2							
89	2	26106-060142	BOLT, M6X 14 PLATED	4							
91	2	129642-61060	COVER, GOVERNOR CASE	1							
133	2	124756-67510	RETAINER	1							
134	2	119653-77950	SOLENOID, STOP	1							
135	2	22272-000070	RING, E- 7	1							

N:Old ◄Yes/No► New. Q:Old ◄No/Yes► New, R:Old ◄Yes/Yes► New, S:Old ◄No/No► New, W:Add, Z:Discontinued, F:Interchangeable by set, K:Q'ty Change

Copyright (C) YANMAR GLOBAL CS CO., LTD. All RightsReserved.

Fig.13. FUEL INJECTION VALVE

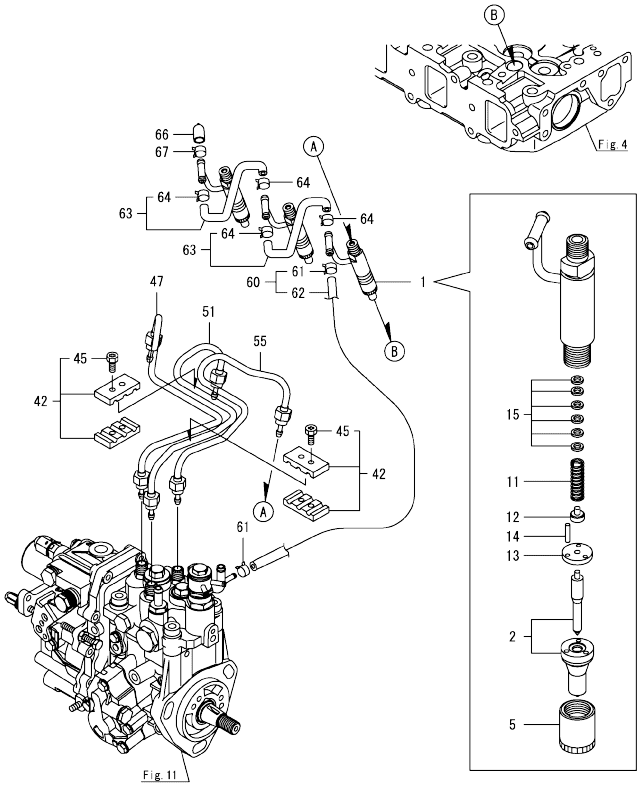

(A)=3TNV88-BDRFU (D)=
(B)= (E)=
(C)= (F)=

No.	Lev.	Parts No.	Description	Q'ty (A)	(B)	(C)	(D)	(E)	(F)	I	R
1	1	729604-53400	VALVE ASSY,INJECTION	3							
2	2	129604-53300	VALVE ASSY,INJECTION	3							
5	2	114250-53080	NUT, NOZZLE D16.95	3							
11	2	114250-53120	SPRING, NOZZLE	3							
12	2	114250-53130	SEAT, SPRING	3							
13	2	114250-53140	PLATE	3							
14	2	114250-53210	PIN	6							
15	2	119803-53400	SHIM SET	3							
42	1	129150-59120	RETAINER, PIPE	2							
45	2	129150-59131	BOLT, M4X14	4							
47	1	129004-59811	PIPE ASSY, INJECTION	1							
51	1	129004-59821	PIPE ASSY, INJECTION	1							
55	1	129004-59831	PIPE ASSY, INJECTION	1							
60	1	119802-59550	PIPE ASSY, RETURN	1							
61	2	124722-59050	CLIP, HOSE 9	2							
62	2	119802-59560	PIPE, FUEL RETURN	1							
63	1	129486-59551	PIPE ASSY, RETURN	2							
64	2	124722-59050	CLIP, HOSE 9	4							
66	1	119593-59581	CAP	1							
67	1	124060-77680	CLIP, HOSE 10	1							

N:Old ←Yes/No→ New. Q:Old ←No/Yes→ New. R:Old ←Yes/Yes→ New. S:Old ←No/No→ New. W:Add. Z:Discontinued. F:Interchangeable by set. K:Q'ty Change

Copyright (C) YANMAR GLOBAL CS CO., LTD. All RightsReserved.

Fig.14. FUEL LINE

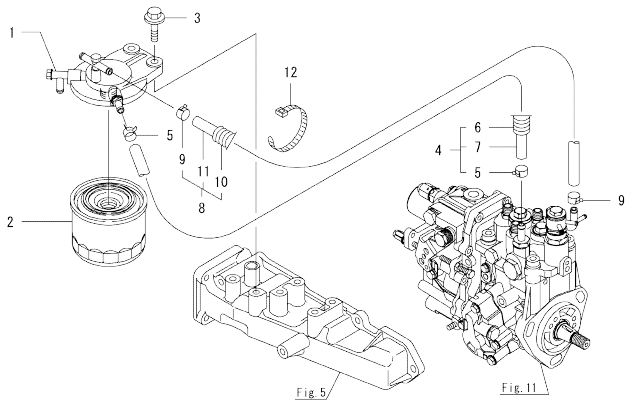

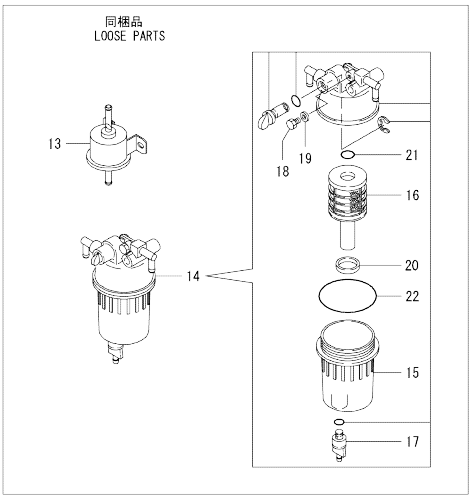

(A)=3TNV88-BDRFU (D)=
(B)= (E)=
(C)= (F)=

No.	Lev.	Parts No.	Description	Q'ty (A)	(B)	(C)	(D)	(E)	(F)	I	R
1	1	129004-55612	BRACKET, FILTER	1							
2	1	119802-55801	FILTER, FUEL	1							
3	1	26106-080302	BOLT, M8X 30 PLATED	2							
4	1	129044-59010	PIPE, D13/7.5X220	1							
5	2	124766-59050	CLIP, HOSE 12	2							
6	2	129044-59100	TUBE, CORRUGATED	1							
7	2	129044-59510	PIPE, FUEL 220	1							
8	1	129950-59311	PIPE, FUEL	1							
9	2	124766-59050	CLIP, HOSE 12	2							
10	2	129961-59110	TUBE, CORRUGATED	1							
11	2	105025-59580	PIPE, FUEL	1							
12	1	121750-59890	BAND, 140	1							
13	1	119225-52102	PUMP ASSY, FUEL FEED	1							
14	1	129242-55710	SEPARATOR ASSY	1							
15	2	129242-55720	CUP	1							
16	2	129242-55730	ELEMENT	1							
17	2	129242-55740	PLUG, DRAIN	1							
18	2	129242-55750	VALVE, AIR VENT	1							
19	2	129242-55760	GASKET	1							
20	2	129242-55770	FLOAT	1							
21	2	24311-000160	O-RING, 1AP16.0	1							
22	2	24321-000750	O-RING, 1AG75.0	1							

N:Old ←Yes/No→ New. Q:Old ←No/Yes→ New. R:Old ←Yes/Yes→ New. S:Old ←No/No→ New. W:Add. Z:Discontinued. F:Interchangeable by set. K:Q'ty Change

Copyright (C) YANMAR GLOBAL CS CO., LTD. All RightsReserved.

Fig.15. FUEL TANK

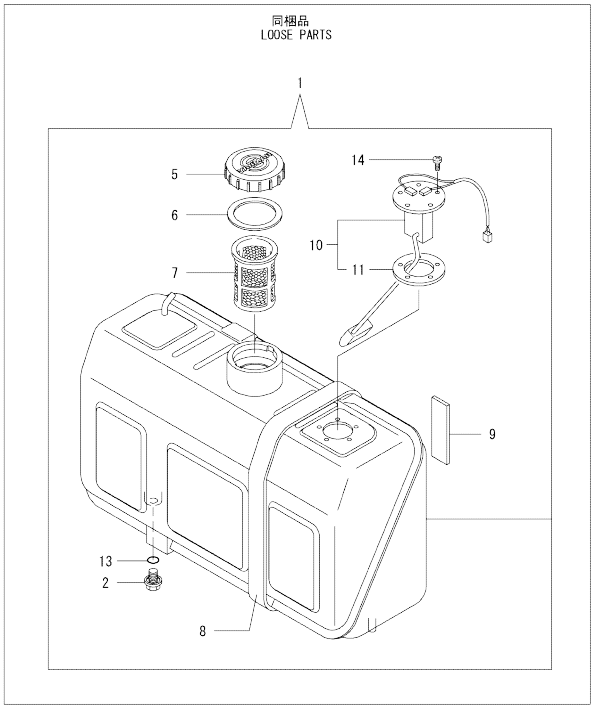

(A)=3TNV88-BDRFU (D)=
(B)= (E)=
(C)= (F)=

No.	Lev.	Parts No.	Description	Q'ty (A)	(B)	(C)	(D)	(E)	(F)	I	R
1	1	129065-55010	TANK ASSY, FUEL	1							
2	2	124060-01640	PLUG, M12	1							
5	2	105302-55040	CAP, FUEL TANK	1							
6	2	101504-55051	GASKET	1							
7	2	101504-55101	STRAINER, FUEL	1							
8	2	121400-55830	SEAT, RUBBER	2							
9	2	121400-55870	FELT, FUEL TANK	2							
10	2	198290-56600	GAUGE ASSY, FUEL	1							
11	3	194420-56620	GASKET	1							
13	2	24311-000140	O-RING, 1AP14.0	1							
14	2	26557-050122	SCREW, M5X12	5							

N:Old ◄Yes/No► New. Q:Old ◄No/Yes► New. R:Old ◄Yes/Yes► New. S:Old ◄No/No► New. W:Add. Z:Discontinued. F:Interchangeable by set. K:Q'ty Change

Copyright (C) YANMAR GLOBAL CS CO., LTD. All RightsReserved.

Fig.16. STARTING MOTOR

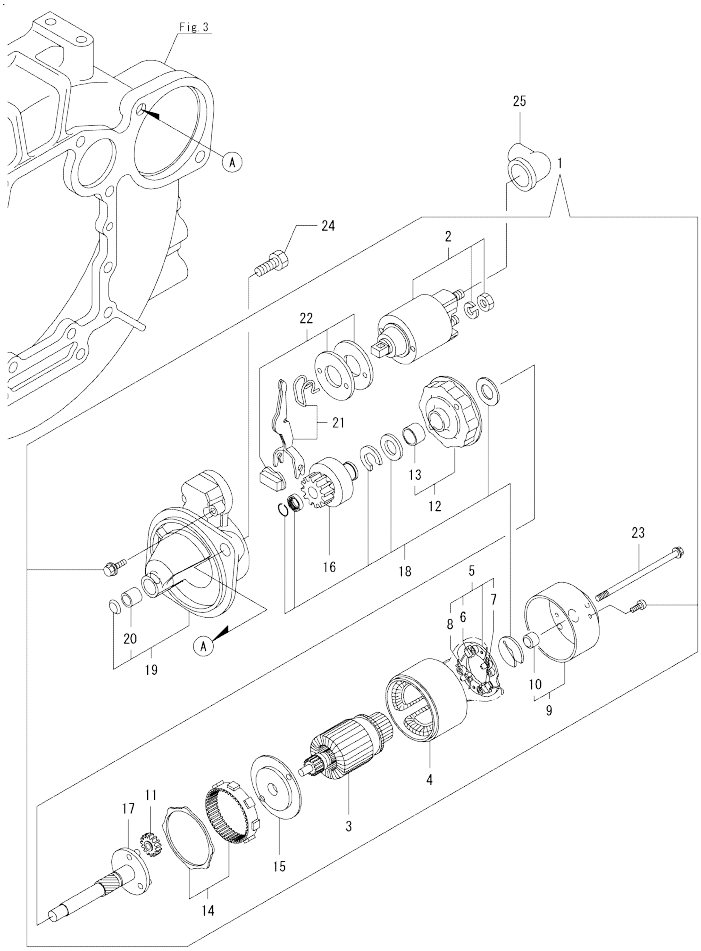

(A)=3TNV88-BDRFU (D)=
(B)= (E)=
(C)= (F)=

No.	Lev.	Parts No.	Description	Q'ty (A)	(B)	(C)	(D)	(E)	(F)	I	R
1	1	129242-77010	STARTER	1							
2	2	129698-77020	MAGNETIC SWITCH ASSY	1							
3	2	129242-77100	ARMATURE ASSY	1							
4	2	129242-77110	YOKE ASSY	1							
5	2	129242-77120	BRUSH HOLDER ASSY	1							
6	3	129242-77130	BRUSH(-)	2							
7	3	129242-77140	BRUSH(+) SET	1							
8	3	129242-77150	BRUSH SPRING	4							
9	2	129242-77160	REAR COVER ASSY	1							
10	3	129242-77170	REAR COVER METAL	1							
11	2	118400-77170	GEAR	3							
12	2	129242-77180	CENTER BRACKET(P)	1							
13	3	129698-77190	BRACKET	1							
14	2	129698-77200	GEAR, INTERNAL	1							
15	2	129242-77210	CENTER BRACKET(A)	1							
16	2	129698-77220	PINION ASSY	1							
17	2	129698-77230	SHAFT(PINION	1							
18	2	129698-77250	WASHER SET	1							
19	2	129242-77260	GEAR CASE ASSY	1							
20	3	X2114535200	METAL, STARTER	1							
21	2	129242-77270	SHIFT LEVER SET	1							
22	2	129242-77280	DUST COVER KIT	1							
23	2	124195-77770	THROUGH BOLT	2							
24	1	26116-120252	BOLT, M12X 25 PLATED	2							
25	1	124160-77020	COVER, TERMINAL	1							

N:Old ←Yes/No→ New. Q:Old ←No/Yes→ New. R:Old ←Yes/Yes→ New. S:Old ←No/No→ New. W:Add. Z:Discontinued. F:Interchangeable by set. K:Q'ty Change

Copyright (C) YANMAR GLOBAL CS CO., LTD. All RightsReserved.

Fig.17. GENERATOR

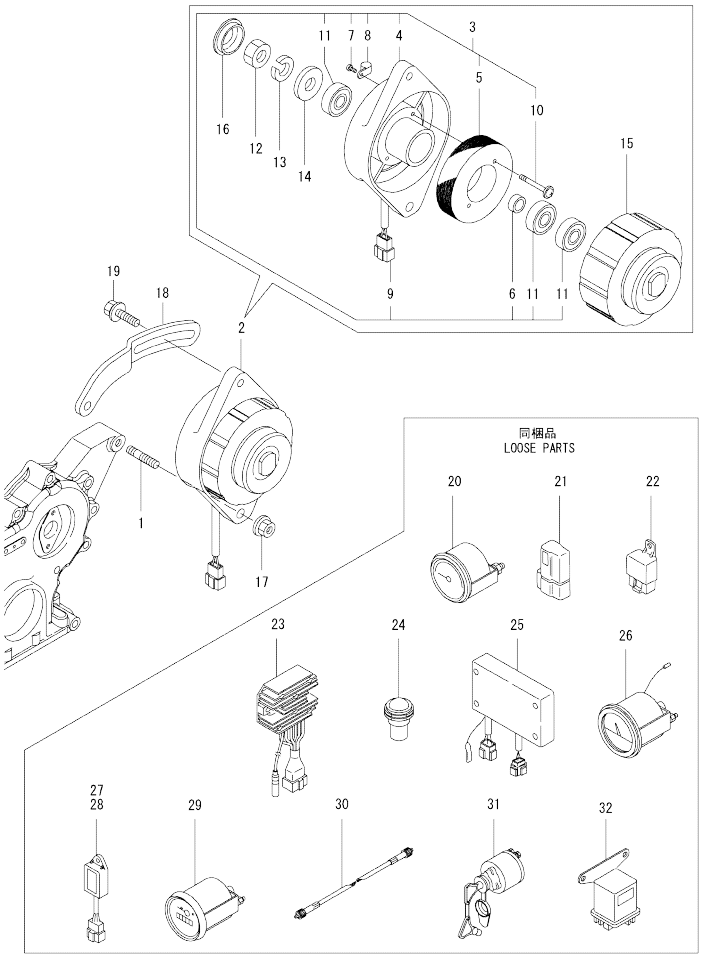

(A)=3TNV88-BDRFU (D)=
(B)= (E)=
(C)= (F)=

No.	Lev.	Parts No.	Description	Q'ty (A)	(B)	(C)	(D)	(E)	(F)	I	R
1	1	129795-01900	STUD	1							
2	1	119910-77200	DYNAMO ASSY	1							
3	2	X2A10592KA	PLATE ASSY	1							
4	3	X2A07075KB	PLATE, COIL	1							
5	3	X3A02982KC	STATOR ASSY	1							
6	3	X4A10092KA	COLLAR	1							
7	3	XYSPS400800	SCREW	1							
8	3	XM069000000	CLAMP	1							
9	3	XM771860000	COUPLER	1							
10	3	119259-77250	SCREW	2							
11	3	24104-062010	BEARING, 6201UUC3	3							
12	2	XM863720000	NUT	1							
13	2	XM219230000	WASHER, SPRING	1							
14	2	XM860250000	WASHER 10	1							
15	2	X3A08863KA	FLYWHEEL ASSY	1							
16	2	XM771870000	CAP	1							
17	1	26306-100002	NUT, M10	1							
18	1	119802-77320	ADJUSTER	1							
19	1	119810-77340	BOLT, ADJUSTER	1							
20	1	194697-56110	METER ASSY, FUEL OIL	1							
21	1	119643-66900	DIODE	3							
22	1	119247-77100	RELAY, SAFETY	3							
23	1	119653-77711	LIMITER, CURRENT	1							
24	1	124732-77720	LAMP, CHARGING	5							
25	1	171440-77801	RELAY, EMERGENCY	1							
26	1	171010-77850	THERMOSTAT	1							
27	1	128300-77920	TIMER	1							
28	1	129211-77920	TIMER	1							
29	1	171014-91102	TACHOMETER	1							
30	1	124701-91140	CABLE, L=985	1							
31	1	121575-91250	SWITCH, KEY	1							
32	1	119650-77910	RELAY ASSY, GLOW	1							

N:Old ◄Yes/No► New. Q:Old ◄No/Yes► New. R:Old ◄Yes/Yes► New. S:Old ◄No/No► New. W:Add. Z:Discontinued. F:Interchangeable by set. K:Q'ty Change

Copyright (C) YANMAR GLOBAL CS CO., LTD. All RightsReserved.

Fig.18. GASKET SET

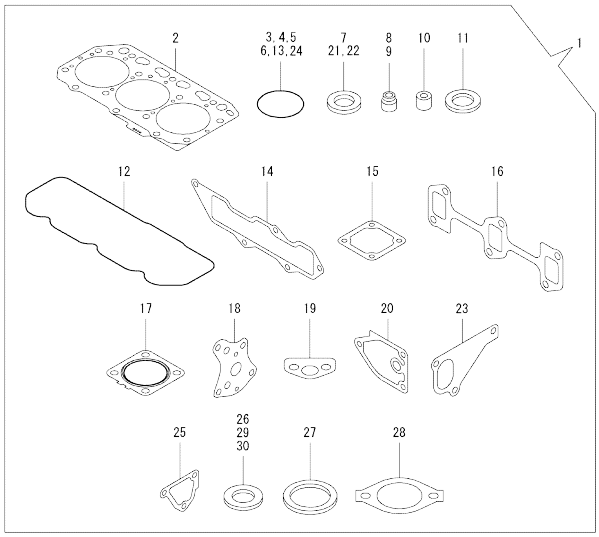

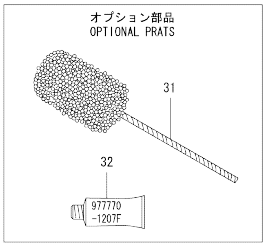

(A)=3TNV88-BDRFU
(B)=
(C)=
(D)=
(E)=
(F)=

No.	Lev.	Parts No.	Description	Q'ty (A)	(B)	(C)	(D)	(E)	(F)	I	R
1	1	729005-92620	GASKET SET	1							1
2	2	129001-01340	GASKET, HEAD	1							
3	2	119609-32040	O-RING, P16	2							
4	2	121850-51960	O-RING	1							
5	2	24311-000320	O-RING, 1AP32.0	2							
6	2	24341-000240	O-RING, 1AS24.0	1							
7	2	22190-220002	WASHER, SEAL 22	1							
8	2	121400-11340	SEAL, VALVE STEM	3							
9	2	124460-11340	SEAL, VALVE STEM	3							
10	2	119802-11870	PROTECTOR, NOZZLE	3							
11	2	119625-11880	SEAT, NOZZLE	3							
12	2	129004-11310	GASKET, BONNET	1							
13	2	24311-000120	O-RING, 1AP12.0	3							
14	2	129001-12110	GASKET, MANIFOLD	1							
15	2	129150-77511	GASKET	1							
16	2	129150-13110	GASKET	1							
17	2	129004-13200	GASKET, SILENCER	1							
18	2	129150-32020	GASKET, PUMP	1							
19	2	129150-35042	GASKET	1							
20	2	129150-35111	GASKET	1							
21	2	22190-080002	WASHER, SEAL 6	2							
22	2	22190-100002	WASHER, SEAL 10	2							
23	2	129486-42021	GASKET, WATER PUMP	1							
24	2	129486-42140	O-RING, G30	1							
25	2	124395-49840	GASKET	1							
26	2	23414-080000	GASKET, 8X1.0	1							
27	2	129150-49811	GASKET, THERMOSTAT	1							
28	2	129795-49551	GASKET	1							
29	2	124465-44950	GASKET, 16	2							
30	1	129150-49360	GASKET	1							
31	1	129400-92430	HONE	1							1
32	1	977770-1207F	GASKET.LIQUID	1							1

Remarks
(1)Optional parts.

N:Old ◄Yes/No► New. Q:Old ◄No/Yes► New, R:Old ◄Yes/Yes► New, S:Old ◄No/No► New, W:Add, Z:Discontinued, F:Interchangeable by set, K:Q'ty Change

Copyright (C) YANMAR GLOBAL CS CO., LTD. All RightsReserved.

Parts No. Index

Parts No.	Fig. No.	Ref. No.
101504-55051	15	6
101504-55101	15	7
103954-13201	6	9
105025-59580	14	11
105302-55040	15	5
114250-39450	9	41
114250-53080	13	5
114250-53120	13	11
114250-53130	13	12
114250-53140	13	13
114250-53210	13	14
118400-77170	16	11
119131-18320	6	5
119225-52102	14	13
119247-77100	17	22
119259-77250	17	10
119593-59581	13	66
119609-32040	2	9
	18	3
119620-01750	3	3
119625-11880	4	33
	18	11
119629-49080	10	64
119640-01640	3	10
119643-66900	17	21
119650-77910	17	32
119653-77711	17	23
119653-77950	12	134
119660-61901	12	60
119802-01561	2	5
119802-03110	4	44
119802-03121	4	45
119802-03130	4	46
119802-03141	4	47
119802-11260	4	6
119802-11270	4	7
119802-11280	4	8
119802-11870	4	32
	18	10
119802-12500	5	12
119802-12560	5	16
119802-25071	7	13
119802-25101	7	10
119802-25901	7	16
119802-35110	9	25
		26 B
119802-39450	9	43
119802-49113	10	10
119802-49730	10	39
119802-51090	11	17

Parts No.	Fig. No.	Ref. No.
119802-51250	11	130
119802-51560	11	59
119802-51590	11	65
119802-51600	11	66
119802-51680	11	70
119802-51690	11	71
119802-55801	14	2
119802-59550	13	60
119802-59560	13	62
119802-77320	17	18
119803-01520	2	4
119803-21200	8	4
119803-25050	7	9
119803-53400	13	15
119803-77520	5	7
119803-77830	4	57
119807-61420	12	23
119808-12520	5	13
119808-12540	5	14
119810-77340	17	19
119823-12210	5	19
119866-12541	5	15
119910-12210	5	11
119910-77200	17	2
119934-01800	2	3
119934-59910	11	127
120130-11860	4	30
120270-54410	4	35
121111-21501	8	11
121250-44901	10	34
121267-44760	10	26
121400-11340	4	26
	18	8
121400-55830	15	8
121400-55870	15	9
121450-44531	10	45
121468-44520	10	44
121470-44540	10	58
121470-44581	10	48
121520-34810	9	17
121550-23200	8	26
121550-49111	9	50
121575-91250	17	31
121750-59890	14	12
121850-21680	8	10
121850-51960	2	10
	18	4
123900-13610	6	3
123900-13630	6	4
124060-01050	1	11

Parts No.	Fig. No.	Ref. No.
124060-01640	15	2
124060-77680	13	67
124066-59100	10	66
124085-35350	9	23 -2
124160-01751	2	6
	4	40
124160-01910	1	12
		13
124160-11360	4	52
124160-39140	9	42
124160-77020	16	25
124195-77770	16	23
124240-01871	2	7
124250-49351	10	33
124395-49840	10	17
	18	25
124450-44560	10	47
124460-11340	4	27
	18	9
124465-44950	10	35
	18	29
124550-21600	8	14
124701-91140	17	30
124722-59050	10	40
		43
	13	61
		64
124732-77720	17	24
124756-67510	12	133
124766-59050	14	5
		9
128300-77920	17	27
129001-01250	1	4
129001-01340	1	28
	18	2
129001-02931	1	29
129001-12110	5	4
	18	14
129001-32001	9	1
129004-03010	4	42
129004-03080	5	1
129004-11241	4	3
129004-11251	4	4
129004-11310	4	49
	18	12
129004-11350	4	41
129004-11650	4	10
129004-11900	4	34
129004-12101	5	3
129004-13200	6	7

Parts No.	Fig. No.	Ref. No.
129004-13200	18	17
129004-21650	8	8
129004-42001	10	1
129004-42040	10	15
129004-49610	10	37
129004-49620	10	41
129004-49711	10	38
129004-49721	10	42
129004-55612	14	1
129004-59811	13	47
129004-59821	13	51
129004-59831	13	55
129005-11100	4	22
129005-22080	8	15
129005-22500	8	17
129005-22900	8	32
129005-22950	8	34
129005-59830	9	44
129006-35100	9	24
		26 A
129006-44480	9	29
129006-49040	9	34
129008-11700	4	15
129008-21000	8	1
129008-51390	11	41
129008-51900	11	15
129008-51920	11	16
129008-77800	4	55
129008-77820	4	56
129044-44520	10	50
129044-44600	10	55
129044-59010	14	4
129044-59100	14	6
129044-59510	14	7
129065-55010	15	1
129100-01580	3	1
		16
	8	2
129100-01640	3	17
129100-01730	3	8
129100-01760	3	9
129100-11112	4	23
129100-13110	6	1
129100-23910	8	29
129100-35301	9	19
129100-42051	10	3
129100-42121	10	4
129103-49301	9	39
129107-44590	10	53
129120-44741	10	25

Parts No. Index

Parts No.	Fig. No.	Ref. No.
129129-14580	7	3
129132-21590	8	12
129136-13530	6	8
129150-01200	1	27
129150-01650	3	18
129150-02020	1	6
129150-02450	7	4
129150-02871	1	32
129150-02931	1	24
129150-02941	1	35
129150-03070	4	43
129150-11230	4	11
129150-11280	4	9
129150-11370	4	14
129150-11750	4	13
129150-11810	4	31
129150-13110	6	2
	18	16
129150-14101	7	6
129150-14200	7	1
129150-14400	7	2
129150-23601	8	27
129150-23611	8	30
129150-25301	7	15
129150-32020	9	14
	18	18
129150-35042	9	18
	18	19
129150-35111	9	27
	18	20
129150-35153	9	28
129150-49080	10	62
129150-49100	10	61
129150-49360	10	36
	18	30
129150-49811	10	29
	18	27
129150-59120	13	42
129150-59131	13	45
129150-77511	5	8
	18	15
129150-91400	2	19
129155-49801	10	28
129155-51280	12	6
129155-61460	12	25
129202-22300	8	21
129211-77920	17	28
129239-34800	9	16
129242-55710	14	14
129242-55720	14	15

Parts No.	Fig. No.	Ref. No.
129242-55730	14	16
129242-55740	14	17
129242-55750	14	18
129242-55760	14	19
129242-55770	14	20
129242-77010	16	1
129242-77100	16	3
129242-77110	16	4
129242-77120	16	5
129242-77130	16	6
129242-77140	16	7
129242-77150	16	8
129242-77160	16	9
129242-77170	16	10
129242-77180	16	12
129242-77210	16	15
129242-77260	16	19
129242-77270	16	21
129242-77280	16	22
129255-61410	12	22
129350-49530-1	10	30
129400-92430	18	31
129403-42380	10	23
129410-03990	5	2
129417-33110	9	23
129417-33111	9	23 -1
129417-35150	9	26
		26 C
129486-01670	3	6
129486-42021	10	14
	18	23
129486-42140	10	16
	18	24
129486-59551	13	63
129508-33010	9	21
129508-33031	9	21 -1
129508-33050	9	22
129508-33060	9	22 -1
129508-35100	9	24 -1
129508-35150	9	26 D
129508-49030	9	30
129601-44610	10	56
129602-49010	10	59
129604-53300	13	2
129612-49040	10	60
129642-49180	9	37
129642-61060	12	91
129698-77020	16	2
129698-77190	16	13
129698-77200	16	14

Parts No.	Fig. No.	Ref. No.
129698-77220	16	16
129698-77230	16	17
129698-77250	16	18
129795-01780	3	19
129795-01900	17	1
129795-01950	2	8
129795-02412	1	9
129795-11120	4	24
129795-11180	4	25
129795-21661	8	9
129795-49551	10	31
	18	28
129900-07900	4	1
129916-49740	10	11
129950-59311	14	8
129961-59110	14	10
158552-51151	11	20
158552-51571	11	60
		61
158552-51580	11	64
158552-51600	11	74
158552-51670	11	6
158552-51781	11	100
158552-52100	11	125
158552-52311	11	109
158552-52400	11	110
158552-52500	11	126
158552-61441	12	24
158552-61900	12	82
158553-51551	11	4
158553-51630	11	75
158553-51650	11	77
158553-51660	11	78
158553-51670	11	69
158553-51680	11	79
158553-51770	11	106
158553-51930	11	105
	12	66
158553-61050	12	3
158553-61070	12	4
158557-51570	11	62
158563-51281	11	39
		40
158563-51330	11	50
158600-51270	11	38
158601-51550	11	58
158601-51570	11	63
158601-51650	11	5
158601-51770	11	99
158601-51790	11	101

Parts No.	Fig. No.	Ref. No.
171008-03990	9	31
		35
171010-77850	17	26
171014-91102	17	29
171051-01921	1	5
171440-01600	3	2
171440-77801	17	25
194420-56620	15	11
194697-56110	17	20
198290-56600	15	10
22190-080002	2	11
	9	45
		47
	18	21
22190-100002	9	48
	18	22
22190-120002	11	103
		111
		128
	12	64
22190-180002	11	104
		112
22190-220002	3	12
	18	7
22217-140000	11	113
22252-000260	8	22
22272-000070	12	135
22312-050140	11	114
22351-030010	8	7
22351-050010	11	115
22351-060012	4	36
22512-070140	7	7
	8	5
22857-500100	4	50
		51
23000-013000	5	20
23000-070000	5	17
		21
23010-038000	10	67
23010-044000	10	68
23065-070130	10	49
23080-015000	9	33
		38
23414-080000	10	18
	18	26
23857-030000	9	46
23875-020000	10	13
23876-010000	10	12
24104-062010	17	11
24311-000070	11	117

Parts No. Index

Parts No.	Fig. No.	Ref. No.
24311-000120	4	53
	18	13
24311-000140	15	13
24311-000160	14	21
24311-000320	2	12
	4	54
	18	5
24321-000750	14	22
24341-000240	2	20
	18	6
24356-190180	11	118
24356-190200	11	72
		119
24372-000150	11	73
25132-003800	10	24
26013-080222	5	18
26014-060122	10	57
26106-060102	11	120
	12	68
26106-060142	12	88
		89
26106-060162	2	21
26106-060202	12	79
26106-060302	10	27
26106-080122	10	19
26106-080142	7	8
26106-080162	2	13
		14
	3	13
	4	2
	10	20
	11	131
26106-080202	5	5
		9
	9	40
	11	132
26106-080222	10	32
26106-080252	3	14
	4	37
26106-080302	2	15
	14	3
26106-080352	3	7
	4	38
	9	20
26106-080402	7	14
26106-080452	3	15
	10	21
26106-080502	3	20
	4	39
26106-080552	2	16

Parts No.	Fig. No.	Ref. No.
26106-080602	10	22
26106-080802	5	6
		10
26106-080852	2	17
26116-120252	16	24
26206-100252	3	4
26206-100302	3	5
26306-080002	2	18
	6	6
26306-100002	17	17
26366-060002	9	49
26450-060252	9	15
26450-080452	11	122
26557-050122	15	14
26577-060142	10	8
26756-060002	12	69
26776-140002	11	123
27241-120000	1	14
27241-300000	1	10
27241-400000	4	21
27310-080001	4	28
719803-01500	2	1
729005-01560	1	1
729005-92620	18	1
729239-51320	11	1
729402-23100	8	23
729604-53400	13	1
977770-1207F	18	32
X2114535200	16	20
X2A07075KB	17	4
X2A10592KA	17	3
X3A02982KC	17	5
X3A08863KA	17	15
X4A10092KA	17	6
XM069000000	17	8
XM219230000	17	13
XM771860000	17	9
XM771870000	17	16
XM860250000	17	14
XM863720000	17	12
XYSPS400800	17	7

Parts No.	Fig. No.	Ref. No.

Parts No.	Fig. No.	Ref. No.