YANMAR

PARTS CATALOG

0CW10-M40300EN

Last update Mar., 2016

PREFACE

1. This Parts catalog is the 1st edition of 3TNV88-BGGEH for HIMOINSA.

Pub.No. : 000Y00W4030
Published : July, 2008

2. Model name

Engine model	Vehicle	Vehicle made by
3TNV88-BGGEH	GENERATOR	HIMOINSA

Directions for the Parts Catalog.

1.The parts stipulated in this Parts Catalog are not necessarily standard equipped parts.
2.Parts may change without prior notice.
3.The following is an example of the Parts Catalog format.

0CF10-G21601 29. FUEL INJECTION PUMP(W/BOOST)

(A)=4JH-DT
(B)=4JH-DTZ
(C)=4JH-DTZP
(D)=4JH-DTZA
(E)=4JH-DTZY
(F)=

① REF.	② LEV.	PARTS NO.	DESCRIPTION	Q'TY (A)	(B)	(C)	(D)	(E)	(F)	③ I	⑤ R
1	1	729595-51390	FUEL INJECTION PUMP	1	1	1	1	1			1
1-1	1	729595-51391	FUEL INJECTION PUMP	1	1	1	1	1		N	1
	(A=E00185)	(B=E00200)									
3	2	26022-060162	SCREW M 6X 16	9	9	9	9	9			
3-1 ④	2	26022-060162	SCREW M 6X 16	4	4	4	4	4		K	
	(A=E00156)	(B=E00156)	(C=E00156) (D=E00156)	(E=E00156)							
4	2	129470-51040	CAMSHAFT	1	1	1	1	1			
5	2	122710-51050	BEARING, ROLLER	2	2	2	2	2			
6	2	129470-51060	RETAINER	1	1	1	1	1			

Remarks
(1) BOOST COMPEMSATOR TYPE. OPTIONAL
PART, TO E00155,(4JH-DT, 4JH-DTZ

① Ref. No.

The Ref. No. listed may not be in accordance with the illustration Ref. No.

(Ex.) Illustration No. 1 List Ref No. 1 (Before change) → 1- 1 (After change)

For interchangeable symbols N, R and K, illustrations for new parts may be abbreviated.

② Lev. (Level)

Level indication
The numbers below indicate the level of relativity towards the main part.
1 ----- Main parts (Assembly parts)
2 ----- Sub component included in " 1 ".
3 ----- Sub component included in " 2 ".
Note) Parts that are not for sale are partially illustrated but not listed.

③ Interchangeability Mark

When a part change takes place, one of the following interchangeability symbols is indicated beside the part.

Symbol	Interchangeability	Contents note
N	Old ← Yes / No → New	New Part is interchangeable for Old Part but Old Part is not interchangeable for New Part.
Q	Old ← No / Yes → New	New Part is not interchangeable for Old Part but Old Part is interchangeable for New Part.
R	Old ← Yes / Yes → New	New/ Old Parts are both interchangeable.
S	Old ← No / No → New	New/ Old Parts are both not interchangeable.
W		Part newly added.
Z		Part discontinued.
F		Not interchangeable by a single part but interchangeable together with related parts.
K		Changes only for used parts quantities.

④ Effective Machine No.

When a part changes, the effective Machine No. will be indicated in the (A)-(F) column.

Product Symbol	Product No.	Product Symbol	Product No.
C	Clutch No. Compressor No.	F	Machine No. (Agricultural Equip.)
D	Drive No.	M	Machine No.
E	Engine No.		

Note 1) A date may follow the symbol. (Ex.) 1996.01
Note 2) " XXXXX " and " ZZZZZ " are for parts that could not be predicted or for engine models that could not be identified.
Note 3) (A=E00185) is the E (Engine Serial Number) for the column (A) model (in this case 4JH-DT) after the parts design change.

⑤ Remarks Mark

Figures or alphabets (symbols) are entered in the remarks column.
The comments (remarks) on parts that are indicated at the bottom of the illustration are the same symbols as those stated above.

Contents

0CW10-M40300

Fig. No.	Fig. Name	Fig. No.	Fig. Name
3TNV88-BGGEH			
1.	CYLINDER BLOCK		
2.	GEAR HOUSING		
3.	FLYWHEEL HOUSING & OIL SUMP		
4.	CYLINDER HEAD & BONNET		
5.	SUCTION MANIFOLD & AIR CLEANER		
6.	EXHAUST MANIFOLD		
7.	CAMSHAFT & DRIVING GEAR		
8.	CRANKSHAFT & PISTON		
9.	LUB.OIL SYSTEM		
10.	COOLING WATER SYSTEM		
11.	FUEL INJECTION PUMP		
12.	GOVERNOR		
13.	FUEL INJECTION VALVE		
14.	FUEL LINE		
15.	STARTING MOTOR		
16.	GENERATOR		
17.	GASKET SET		

0CW10-M40300 3TNV88-BGGEH

Fig.1. CYLINDER BLOCK

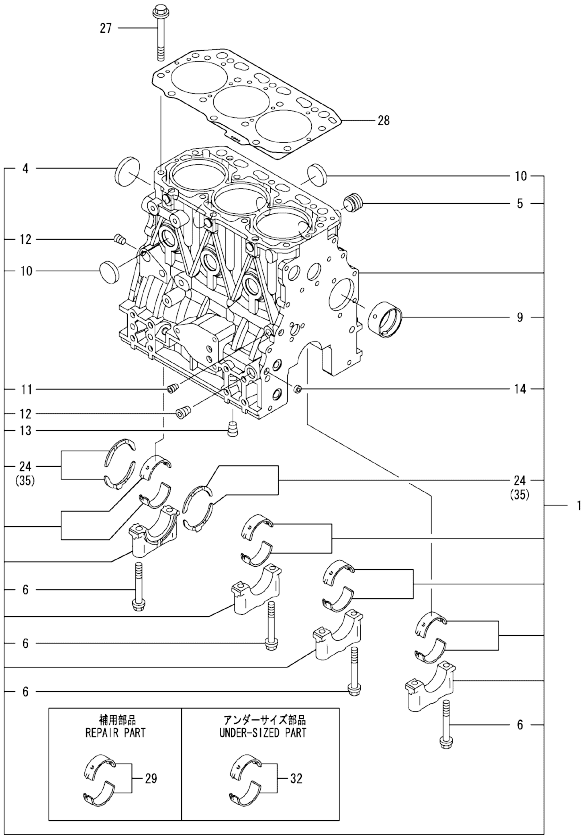

Remarks
(1) REPAIR PART.
(2) UNDER-SIZED(U.S=0.25)PART.
(3) OVER-SIZED(O.S=0.25)PART.

(A)=3TNV88-BGGEH
(B)=3TNV88-BGGEHR
(C)=
(D)=
(E)=
(F)=

No.	Lev.	Parts No.	Description	Q'ty (A)	(B)	(C)	(D)	(E)	(F)	I	R
1	1	729005-01560	BLOCK ASSY, CYLINDER	1	1						
4	2	129001-01250	PLUG, 50	1	1						
5	2	171051-01921	PLUG, NPTF1	1	1						
6	2	129150-02020	BOLT, METAL CAP	8	8						
9	2	129795-02412	BUSH, CAMSHAFT	1	1						
10	2	27241-300000	PLUG 30	6	6						
11	2	124060-01050	PLUG, PT1/8	1	1						
12	2	124160-01910	PLUG, PT1/4	2	2						
13	2	124160-01910	PLUG, PT1/4	1	1						
14	2	27241-120000	PLUG, 12	2	2						
24	2	129150-02931	BEARING, THRUST	2	2						
27	1	129150-01200	BOLT, HEAD	14	14						
28	1	129001-01340	GASKET, HEAD	1	1						
29	1	129001-02931	BEARING, MAIN	4	4						1
32	1	129150-02871	BEARING, 0.25 US	4	4						2
35	1	129150-02941	BEARING, THRUST 0.25	1	1						3

N:Old ←Yes/No→ New. Q:Old ←No/Yes→ New. R:Old ←Yes/Yes→ New. S:Old ←No/No→ New. W:Add. Z:Discontinued. F:Interchangeable by set. K:Q'ty Change

Copyright (C) YANMAR CO., LTD. All RightsReserved.

Fig.2. GEAR HOUSING

(A)=3TNV88-BGGEH
(B)=3TNV88-BGGEHR
(C)=
(D)=
(E)=
(F)=

No.	Lev.	Parts No.	Description	Q'ty (A)	(B)	(C)	(D)	(E)	(F)	I	R
1	1	719803-01500	CASE ASSY, GEAR	1	1						
3	2	119934-01800	SEAL, OIL	1	1						
4	1	119803-01520	FLANGE, GEAR CASE	1	1						
5	1	119802-01561	STUD, M8X25	3	3						
6	1	124160-01751	COVER, FILLER	1	1						
7	1	124240-01871	COVER	1	1						
8	1	129795-01950	PIPE, KNOCK L=18	2	2						
9	1	119609-32040	O-RING, P16	2	2						
10	1	121850-51960	O-RING	1	1						
11	1	129001-91841	BOLT, M8X85	3	3						
12	1	22190-080002	WASHER, SEAL 6	5	5						
13	1	24311-000320	O-RING, 1AP32.0	1	1						
14	1	26106-080162	BOLT, M8X 16 PLATED	4	4						
15	1	26106-080162	BOLT, M8X 16 PLATED	3	3						
16	1	26106-080302	BOLT, M8X 30 PLATED	1	1						
17	1	26106-080552	BOLT, M8X 55 PLATED	12	12						
18	1	26306-080002	NUT, M8	3	3						
19	1	121023-01551	COVER	1	1						
20	1	24341-000240	O-RING, 1AS24.0	1	1						
21	1	26106-060162	BOLT, M6X 16 PLATED	2	2						

N:Old ◄Yes/No► New. Q:Old ◄No/Yes► New. R:Old ◄Yes/Yes► New. S:Old ◄No/No► New. W:Add. Z:Discontinued. F:Interchangeable by set. K:Q'ty Change

Copyright (C) YANMAR CO., LTD. All RightsReserved.

Fig.3. FLYWHEEL HOUSING & OIL SUMP

(A)=3TNV88-BGGEH
(B)=3TNV88-BGGEHR
(C)=
(D)=
(E)=
(F)=

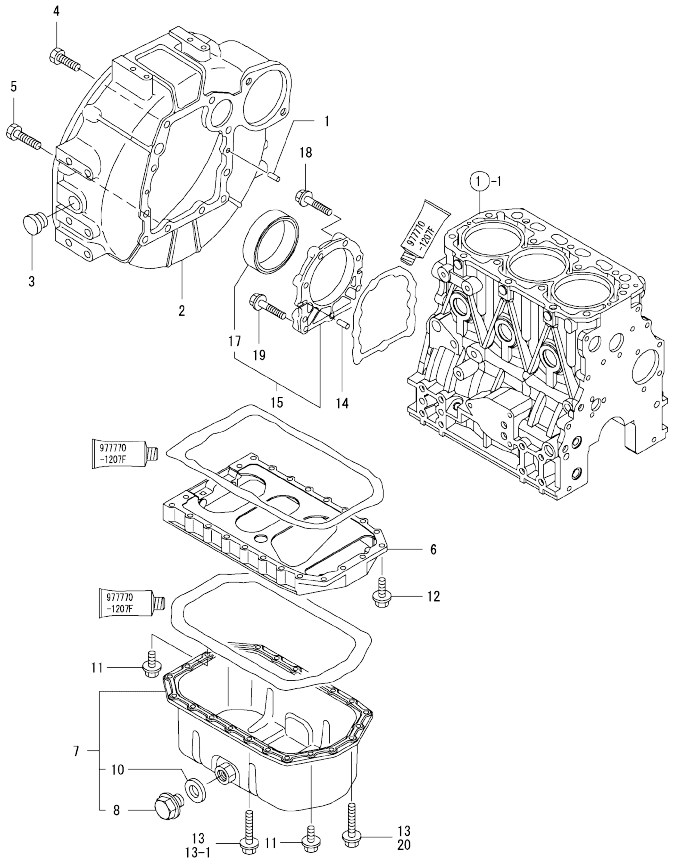

No.	Lev.	Parts No.	Description	Q'ty (A)	(B)	(C)	(D)	(E)	(F)	I	R
1	1	129100-01580	PIN, M8X16	2	2						
2	1	171420-01600	HOUSING, FLYWHEEL	1	1						
3	1	119620-01750	CAP	1	1						
4	1	26206-100252	BOLT, M10X 25 PLATED	6	6						
5	1	26206-100302	BOLT, M10X 30 PLATED	4	4						
6	1	129100-01730	SPACER, OIL SUMP	1	1						
7	1	129100-01760	SUMP ASSY, OIL	1	1						
8	2	119640-01640	PLUG, DRAIN M22	1	1						
10	2	22190-220002	WASHER, SEAL 22	1	1						
11	1	26106-080162	BOLT, M8X 16 PLATED	4	4						
12	1	26106-080252	BOLT, M8X 25 PLATED	2	2						
13	1	26106-080452	BOLT, M8X 45 PLATED	20							
13-1	1	26106-080452	BOLT, M8X 45 PLATED	16	16					K	
	(A=FROM 1ST)										
14	1	129100-01580	PIN, M8X16	2	2						
15	1	129100-01640	CASE ASSY, OIL SEAL	1	1						
17	2	129795-01780	SEAL, OIL	1	1						
18	1	129486-01670	BOLT, M8X30	6	6						
19	1	26106-080352	BOLT, M8X 35 PLATED	3	3						
20	1	26106-080502	BOLT, M8X 50 PLATED	4	4					W	
	(A=FROM 1ST)										

N:Old ←Yes/No→ New. Q:Old ←No/Yes→ New. R:Old ←Yes/Yes→ New. S:Old ←No/No→ New. W:Add. Z:Discontinued. F:Interchangeable by set. K:Q'ty Change

Copyright (C) YANMAR CO., LTD. All RightsReserved.

Fig.4. CYLINDER HEAD & BONNET

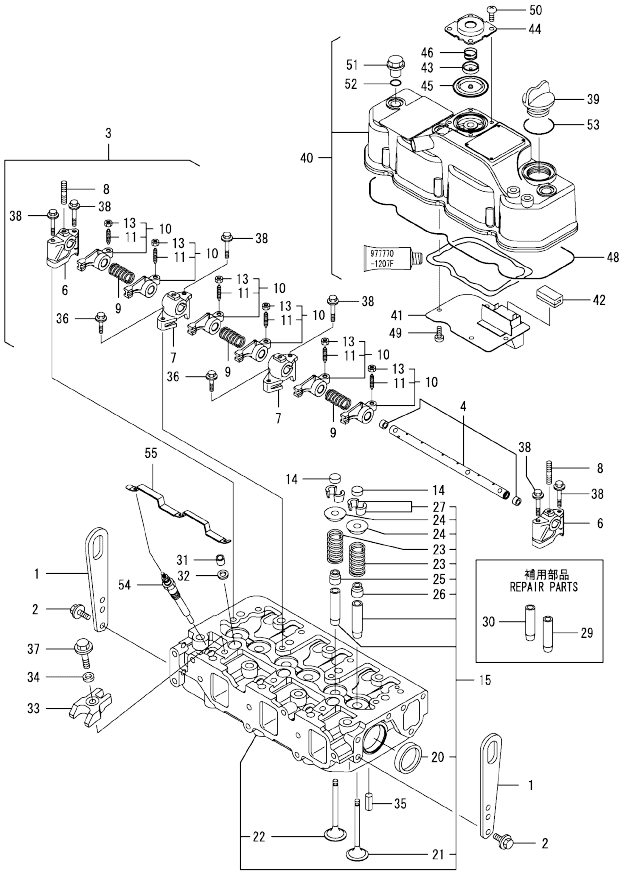

(A)=3TNV88-BGGEH
(B)=3TNV88-BGGEHR
(C)=
(D)=
(E)=
(F)=

No.	Lev.	Parts No.	Description	Q'ty (A)	(B)	(C)	(D)	(E)	(F)	I	R
1	1	129900-07900	LIFTER	2	2						
2	1	26106-080162	BOLT, M8X 16 PLATED	4	4						
3	1	129004-11241	SHAFT ASSY, ROCKER	1	1						
4	2	129004-11251	SHAFT, ROCKER ARM	1	1						
6	2	119802-11260	SUPPORT, ROCKER ARM	2	2						
7	2	119802-11270	SUPPORT, ROCKER ARM	2	2						
8	2	119802-11280	STUD	3	3						
9	2	129150-11280	SPRING	3	3						
10	2	129004-11650	ARM, ROCKER	6	6						
11	3	129150-11230	SCREW, VALVE ADJUST	6	6						
13	3	129150-11750	NUT, M8	6	6						
14	1	129150-11370	CAP, VALVE	6	6						
15	1	129008-11700	HEAD ASSY, CYLINDER	1	1						
20	2	27241-400000	PLUG, 40	2	2						
21	2	129005-11100	VALVE, INTAKE	3	3						
22	2	129100-11112	VALVE, EXHAUST	3	3						
23	2	129795-11120	SPRING, VALVE	6	6						
24	2	129795-11180	RETAINER, SPRING	6	6						
25	2	121400-11340	SEAL, VALVE STEM	3	3						
26	2	124460-11340	SEAL, VALVE STEM	3	3						
27	2	27310-080001	COTTER, 8	6	6						
29	1	120130-11860	GUIDE, VALVE	3	3						1
30	1	129150-11810	GUIDE, VALVE	3	3						1
31	1	119802-11870	PROTECTOR, NOZZLE	3	3						
32	1	119625-11880	SEAT, NOZZLE	3	3						
33	1	129004-11900	RETAINER, NOZZLE	3	3						
34	1	120270-54410	WASHER, INJECTOR	3	3						
35	1	22351-060012	PIN, SPRING 6.0X12	2	2						
36	1	26106-080252	BOLT, M8X 25 PLATED	2	2						
37	1	26106-080352	BOLT, M8X 35 PLATED	3	3						
38	1	26106-080502	BOLT, M8X 50 PLATED	6	6						
39	1	124160-01751	COVER, FILLER	1	1						
40	1	129004-11350	BONNET ASSY, HEAD	1	1						
41	2	129004-03010	PLATE	1	1						
42	2	129150-03070	BAFFLE, BREATHER	1	1						
43	2	119802-03110	PLATE	1	1						
44	2	119802-03121	COVER, DIAPHRAGM	1	1						
45	2	119802-03130	DIAPHRAGM	1	1						
46	2	119802-03141	SPRING, DIAPHRAGM	1	1						
48	2	129004-11310	GASKET, BONNET	1	1						
49	2	22857-500100	SCREW, 5X10	4	4						
50	2	22857-500100	SCREW, 5X10	4	4						
51	1	124160-11360	KNOB	3	3						
52	1	24311-000120	O-RING, 1AP12.0	3	3						
53	1	24311-000320	O-RING, 1AP32.0	1	1						
54	1	129008-77800	PLUG, GLOW	3	3						
55	1	129008-77820	CONNECTOR, GLOW PLUG	1	1						

Remarks
(1) REPAIR PART.

N:Old ←Yes/No→ New. Q:Old ←No/Yes→ New. R:Old ←Yes/Yes→ New. S:Old ←No/No→ New. W:Add. Z:Discontinued. F:Interchangeable by set. K:Q'ty Change

Copyright (C) YANMAR CO., LTD. All RightsReserved.

Fig.5. SUCTION MANIFOLD & AIR CLEANER

(A)=3TNV88-BGGEH
(B)=3TNV88-BGGEHR
(C)=
(D)=
(E)=
(F)=

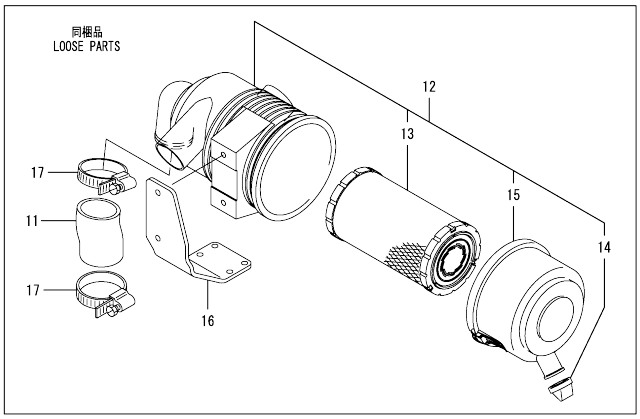

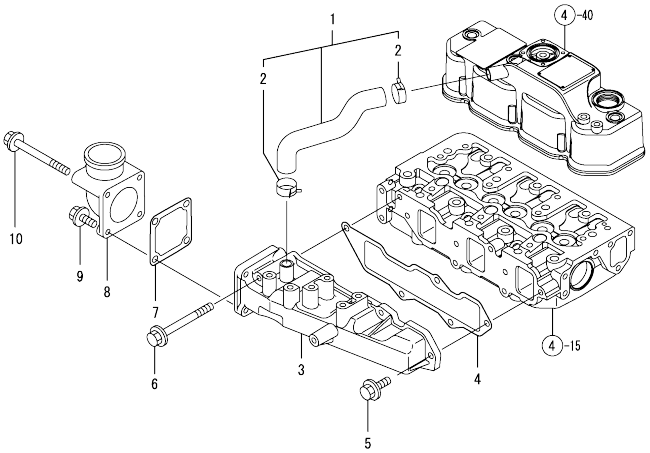

No.	Lev.	Parts No.	Description	Q'ty (A)	(B)	(C)	(D)	(E)	(F)	I	R
1	1	129004-03080	PIPE , BREATHER	1	1						
2	2	129410-03990	CLIP	2	2						
3	1	129004-12101	MANIFOLD, AIR INTAKE	1	1						
4	1	129001-12110	GASKET, MANIFOLD	1	1						
5	1	26106-080202	BOLT, M8X 20 PLATED	4	4						
6	1	26106-080802	BOLT, M8X 80 PLATED	1	1						
7	1	129150-77511	GASKET	1	1						
8	1	119803-77520	BEND, AIR HEATER	1	1						
9	1	26106-080202	BOLT, M8X 20 PLATED	2	2						
10	1	26106-080802	BOLT, M8X 80 PLATED	2	2						
11	1	119910-12210	PIPE, AIR INTAKE	1	1						
12	1	119802-12500	CLEANER ASSY, AIR	1	1						
13	2	129004-12520	ELEMENT	1	1						
14	2	119808-12540	VALVE, UNLOADER	1	1						
15	2	119866-12541	COVER ASSY	1	1						
16	1	119802-12560	BRACKET, AIR CLEANER	1	1						
17	1	23000-070000	CLAMP, 70	2	2						

N:Old ←Yes/No→ New. Q:Old ←No/Yes→ New. R:Old ←Yes/Yes→ New. S:Old ←No/No→ New. W:Add. Z:Discontinued. F:Interchangeable by set. K:Q'ty Change

Copyright (C) YANMAR CO., LTD. All RightsReserved.

Fig.6. EXHAUST MANIFOLD

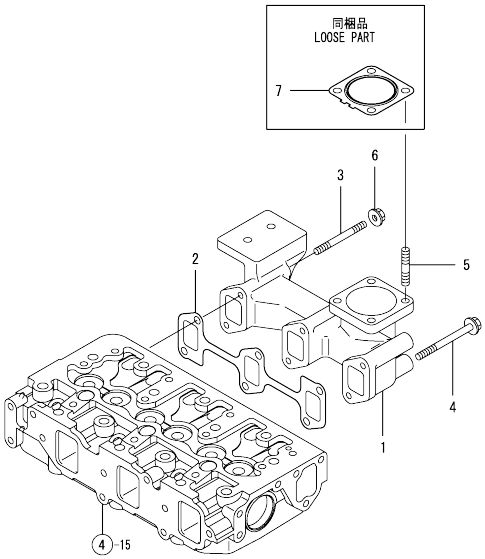

(A)=3TNV88-BGGEH
(B)=3TNV88-BGGEHR
(C)=
(D)=
(E)=
(F)=

No.	Lev.	Parts No.	Description	Q'ty (A)	(B)	(C)	(D)	(E)	(F)	I	R
1	1	129004-13109	MANIFOLD, EXHAUST	1	1						
2	1	129150-13110	GASKET	1	1						
3	1	123900-13610	STUD, M8X80	2	2						
4	1	123900-13630	BOLT, M8X80	4	4						
5	1	119131-18320	STUD, M8X22	4	4						
6	1	26306-080002	NUT, M8	2	2						
7	1	129004-13200	GASKET, SILENCER	1	1						

N:Old ◄Yes/No► New. Q:Old ◄No/Yes► New. R:Old ◄Yes/Yes► New. S:Old ◄No/No► New. W:Add. Z:Discontinued. F:Interchangeable by set. K:Q'ty Change

Copyright (C) YANMAR CO., LTD. All RightsReserved.

Fig.7. CAMSHAFT & DRIVING GEAR

(A)=3TNV88-BGGEH
(B)=3TNV88-BGGEHR
(C)=
(D)=
(E)=
(F)=

No.	Lev.	Parts No.	Description	Q'ty (A)	(B)	(C)	(D)	(E)	(F)	I	R
1	1	129150-14200	TAPPET	6	6						
2	1	129150-14400	ROD, PUSH L=178	6	6						
3	1	129004-14580	CAMSHAFT ASSY	1	1						
4	2	129150-02450	BEARING, THRUST	1	1						
6	2	129150-14101	GEAR, CAMSHAFT	1	1						
7	2	22512-070140	KEY, 7X 14	1	1						
8	1	26106-080142	BOLT, M8X 14 PLATED	2	2						
9	1	119803-25050	SHAFT, IDLE	1	1						
10	1	119802-25101	GEAR ASSY, IDLE	1	1						
13	1	119802-25071	BUSH, IDLE GEAR	1	1						1
14	1	26106-080402	BOLT, M8X 40 PLATED	3	3						
15	1	129150-25301	BOLT	4	4						
16	1	119802-25901	GEAR, PUMP	1	1						
17	1	158552-51151	FLANGE	1	1						
18	1	22217-140000	WASHER, SPRING 14	1	1						
19	1	26776-140002	NUT, LOCK M14	1	1						

Remarks
(1) REPAIR PART.

N:Old ←Yes/No→ New. Q:Old ←No/Yes→ New. R:Old ←Yes/Yes→ New. S:Old ←No/No→ New. W:Add. Z:Discontinued. F:Interchangeable by set. K:Q'ty Change

Copyright (C) YANMAR CO., LTD. All RightsReserved.

Fig.8. CRANKSHAFT & PISTON

(A)=3TNV88-BGGEH
(B)=3TNV88-BGGEHR
(C)=
(D)=
(E)=
(F)=

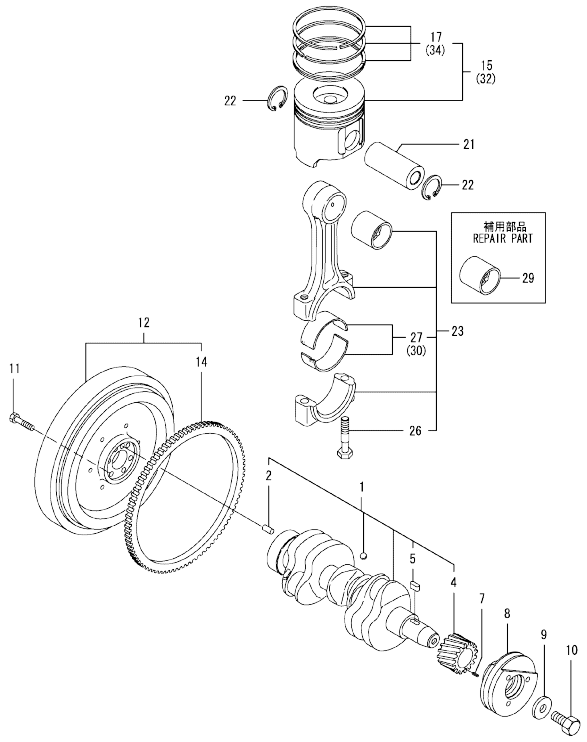

No.	Lev.	Parts No.	Description	Q'ty (A)	(B)	(C)	(D)	(E)	(F)	I	R
1	1	129008-21000	CRANKSHAFT ASSY	1	1						
2	2	129100-01580	PIN, M8X16	1	1						
4	2	119803-21200	GEAR, CRANKSHAFT	1	1						
5	2	22512-070140	KEY, 7X 14	1	1						
7	1	22351-030010	PIN, SPRING 3.0X10	1	1						
8	1	129005-21650	V-PULLEY, 120	1	1						
9	1	129795-21661	WASHER	1	1						
10	1	121850-21680	BOLT	1	1						
11	1	121111-21501	BOLT, FLYWHEEL	6	6						
12	1	171340-21590	FLYWHEEL ASSY	1	1						
14	2	124550-21600	GEAR, RING	1	1						
15	1	129008-22080	PISTON ASSY	3	3						
17	2	129005-22500	RING SET, PISTON	3	3						
21	1	129202-22300	PIN, PISTON D26 L70	3	3						
22	1	22252-000260	RING, 26	6	6						
23	1	729402-23100	ROD ASSY, CONNECTING	3	3						
26	2	121550-23200	BOLT, CONNECTING ROD	6	6						
27	2	129150-23601	BEARING, CRANK PIN	3	3						
29	1	129100-23910	BEARING, PISTON PIN	3	3						1
30	1	129150-23611	BEARING, 0.25 US	3	3						2
32	1	129008-22900	PISTON ASSY, 0.25 OS	3	3						3
34	2	129005-22950	RING SET, 0.25 OS	3	3						3

Remarks
(1) REPAIR PART.
(2) UNDER-SIZED(U.S=0.25)PART.
(3) OVER-SIZED(O.S=0.25)PART.

N:Old ←Yes/No→ New. Q:Old ←No/Yes→ New. R:Old ←Yes/Yes→ New. S:Old ←No/No→ New. W:Add. Z:Discontinued. F:Interchangeable by set. K:Q'ty Change

Copyright (C) YANMAR CO., LTD. All RightsReserved.

Fig.9. LUB.OIL SYSTEM

(A)=3TNV88-BGGEH
(B)=3TNV88-BGGEHR
(C)=
(D)=
(E)=
(F)=

No.	Lev.	Parts No.	Description	Q'ty (A)	(B)	(C)	(D)	(E)	(F)	I	R
1	1	129001-32001	PUMP ASSY, OIL	1	1						
14	1	129150-32020	GASKET, PUMP	1	1						
15	1	26450-060252	BOLT, M6X 25	4	4						
16	1	129004-34802	DIPSTICK, OIL	1	1						
17	1	121520-34810	GUIDE, DIPSTICK	1	1						
18	1	129150-35042	GASKET	1	1						
19	1	129100-35301	PIPE ASSY, OIL INLET	1	1						
20	1	26106-080352	BOLT, M8X 35 PLATED	2	2						
21	1	119802-35100	BRACKET ASSY, FILTER	1	1						
22	2	119802-35110	BRACKET, FILTER	1	1						
23	2	129100-35140	STUD	1	1						
24	1	129150-35111	GASKET	1	1						
25	1	129150-35170	FILTER,LO	1	1						1
26	1	26106-080202	BOLT, M8X 20 PLATED	3	3						
27	1	114250-39450	SWITCH, 0.5KG	1	1						
28	1	124160-39140	BOLT, PIPE JOINT M10	1	1						
29	1	119802-39450	PIPE ASSY, OIL	1	1						
30	1	129005-59830	BOLT ASSY, JOINT M8	1	1						
31	2	22190-080002	WASHER, SEAL 6	1	1						
32	2	23857-030000	BOLT, JOINT 3	1	1						
33	1	22190-080002	WASHER, SEAL 6	1	1						
34	1	22190-100002	WASHER, SEAL 10	2	2						
35	1	26366-060002	NUT, M6	1	1						

Remarks
(1) REPAIR PART.

N:Old $\frac{\text{Yes}}{\text{No}}$ New. Q:Old $\frac{\text{No}}{\text{Yes}}$ New. R:Old $\frac{\text{Yes}}{\text{Yes}}$ New. S:Old $\frac{\text{No}}{\text{No}}$ New. W:Add. Z:Discontinued. F:Interchangeable by set. K:Q'ty Change

Copyright (C) YANMAR CO., LTD. All RightsReserved.

Fig.10. COOLING WATER SYSTEM

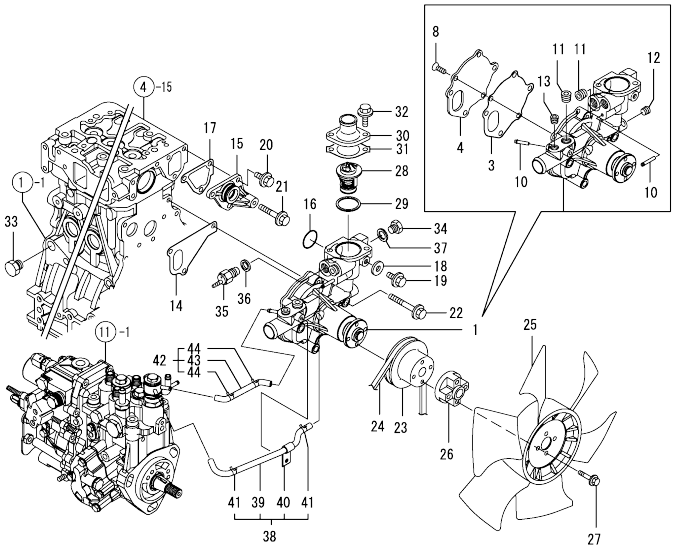

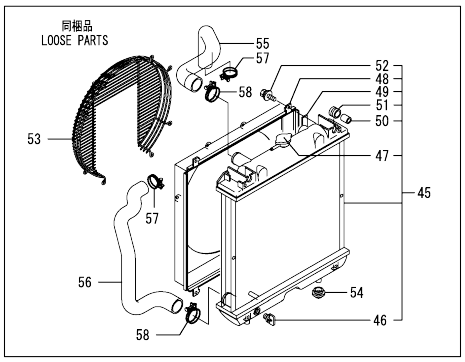

(A)=3TNV88-BGGEH
(B)=3TNV88-BGGEHR
(C)=
(D)=
(E)=
(F)=

No.	Lev.	Parts No.	Description	Q'ty (A)	(B)	(C)	(D)	(E)	(F)	I	R
1	1	129004-42001	PUMP ASSY, WATER	1	1						
3	2	129100-42051	GASKET, WATER PUMP	1	1						
4	2	129100-42121	PLATE	1	1						
8	2	121850-42410	SCREW	3	3						
10	2	119802-49113	JOINT, PIPE	2	2						
11	2	129916-49740	PLUG, R03	2	2						
12	2	23876-010000	PLUG, R01	1	1						
13	2	23876-020000	PLUG, R02	1	1						
14	1	129486-42021	GASKET, WATER PUMP	1	1						
15	1	129004-42040	JOINT	1	1						
16	1	129486-42140	O-RING, G30	1	1						
17	1	124395-49840	GASKET	1	1						
18	1	23414-080000	GASKET, 8X1.0	1	1						
19	1	26106-080122	BOLT, M8X 12 PLATED	1	1						
20	1	26106-080162	BOLT, M8X 16 PLATED	3	3						
21	1	26106-080452	BOLT, M8X 45 PLATED	1	1						
22	1	26106-080602	BOLT, M8X 60 PLATED	3	3						
23	1	129155-42350	V-PULLEY	1	1						
24	1	119831-42290	V-BELT, A37.5	1	1						
25	1	129030-44740	FAN, COOLING D360XUG	1	1						
26	1	121267-44760	SPACER	1	1						
27	1	26106-060302	BOLT, M6X 30 PLATED	4	4						
28	1	129155-49801	THERMOSTAT, 71	1	1						
29	1	129150-49811	GASKET, THERMOSTAT	1	1						
30	1	129350-49530	COVER, THERMOSTAT	1	1						
31	1	129795-49551	GASKET	1	1						
32	1	26106-080222	BOLT, M8X 22 PLATED	2	2						
33	1	171056-49120	PLUG, DRAIN	1	1						
34	1	121450-42450	PLUG, M16	1	1						
35	1	121250-44901	SWITCH, 110	1	1						
36	1	124465-44950	GASKET, 16	1	1						
37	1	124465-44950	GASKET, 16	1	1						
38	1	129004-49610	PIPE ASSY, WATER	1	1						
39	2	129004-49711	PIPE ASSY, WATER	1	1						
40	2	119802-49730	RETAINER, PIPE	1	1						
41	2	124722-59050	CLIP, HOSE 9	2	2						
42	1	129004-49620	PIPE ASSY, WATER	1	1						
43	2	129004-49721	PIPE ASSY, WATER	1	1						
44	2	124722-59050	CLIP, HOSE 9	2	2						
45	1	129044-44500	RADIATOR ASSY	1	1						
46	2	129508-44550	COCK ASSY	1	1						
47	2	129107-44590	CAP, RADIATOR	1	1						
48	2	129044-44600	SHROUD	1	1						
49	2	129601-44610	GASKET	2	2						
50	2	118400-44670	COLLAR	2	2						
51	2	118400-44720	MOUNT, RUBBER	2	2						
52	2	26014-060122	BOLT, M6X 12	4	4						
53	1	129601-44560	GUARD	1	1						
54	1	119255-44660	ABSORBER	2	2						
55	1	129602-49010	PIPE, WATER	1	1						
56	1	129612-49040	PIPE, WATER	1	1						

N:Old ←Yes/No→ New. Q:Old ←No/Yes→ New. R:Old ←Yes/Yes→ New. S:Old ←No/No→ New. W:Add. Z:Discontinued. F:Interchangeable by set. K:Q'ty Change

++ CONTINUE ++

Copyright (C) YANMAR CO., LTD. All RightsReserved.

Fig.10. COOLING WATER SYSTEM

(A)=3TNV88-BGGEH
(B)=3TNV88-BGGEHR
(C)=
(D)=
(E)=
(F)=

No.	Lev.	Parts No.	Description	Q'ty (A)	(B)	(C)	(D)	(E)	(F)	I	R
57	1	23010-038000	CLAMP, 38	2	2						
58	1	23010-044000	CLAMP, 44	2	2						

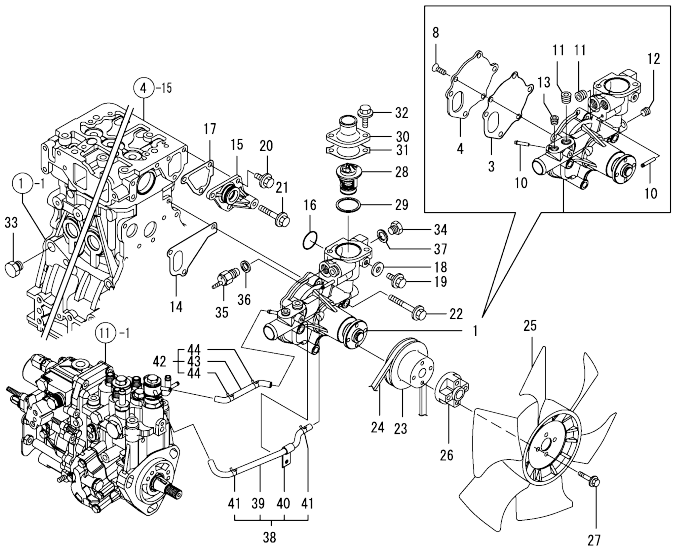

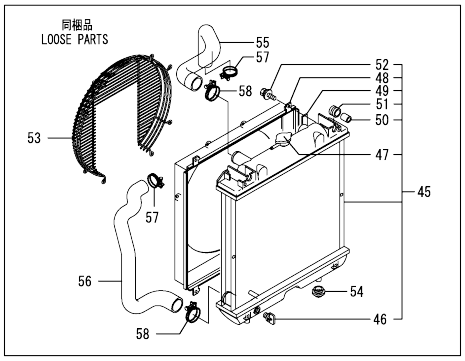

N:Old ←Yes/No→ New. Q:Old ←No/Yes→ New. R:Old ←Yes/Yes→ New. S:Old ←No/No→ New. W:Add. Z:Discontinued. F:Interchangeable by set. K:Q'ty Change

Copyright (C) YANMAR CO., LTD. All RightsReserved.

Fig.11. FUEL INJECTION PUMP

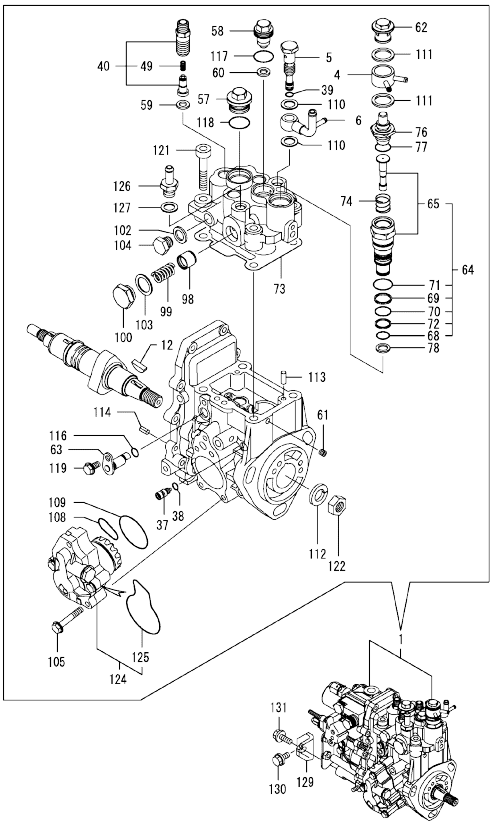

Remarks
(1) GOVERNOR ASSY(FIG.12) IS INCORPORATED IN THIS FUEL INJECTION PUMP(REF.NO.1).

(A)=3TNV88-BGGEH
(B)=3TNV88-BGGEHR
(C)=
(D)=
(E)=
(F)=

No.	Lev.	Parts No.	Description	Q'ty (A)	(B)	(C)	(D)	(E)	(F)	I	R
1	1	729283-51390	PUMP ASSY, INJECTION	1	1						1
4	2	158553-51551	JOINT	1	1						
5	2	158601-51650	JOINT, OVER FLOW	1	1						
6	2	158552-51670	JOINT, OVER FLOW	1	1						
12	2	119802-51090	KEY, 4X16	1	1						
37	2	158600-51270	STOPPER, TAPPET	1	1						
38	2	158563-51281	O-RING, 4D S6	1	1						
39	2	158563-51281	O-RING, 4D S6	1	1						
40	2	129008-51390	VALVE ASSY, DELIVERY	3	3						
49	3	158563-51330	SPRING, DELIVERY	3	3						
57	2	158601-51550	PLUG	1	1						
58	2	119802-51560	PLUG, BARREL	1	1						
59	2	158552-51571	GASKET	3	3						
60	2	158552-51571	GASKET	1	1						
61	2	158557-51570	PLUG	1	1						
62	2	158601-51570	PLUG	1	1						
63	2	158552-51580	LIFTER	1	1						
64	2	119802-51590	TIMER SET	1	1						
65	3	119802-51600	TIMER ASSY	1	1						
68	3	158553-51670	O-RING, 1011	1	1						
69	3	119802-51680	RING, BACK UP	1	1						
70	3	119802-51690	O-RING	1	1						
71	3	24356-010200	O-RING, 4D1020	1	1						
72	3	24372-000150	RING, BACK UP T2P15	1	1						
73	2	158552-51600	GASKET	1	1						
74	2	158553-51630	SPRING, TIMER	1	1						
76	2	158553-51640	ELEMENT	1	1						
77	2	158553-51660	O-RING, P14	1	1						
78	2	158553-51680	GASKET	1	1						
98	2	158601-51770	PISTON	1	1						
99	2	158552-51781	SPRING	1	1						
100	2	158601-51790	PLUG	1	1						
102	2	22190-120002	WASHER, SEAL 12	1	1						
103	2	22190-180002	WASHER, SEAL 18	1	1						
104	2	23887-120002	PLUG, 12	1	1						
105	2	158553-51770	BOLT	4	4						
108	2	158552-52310	O-RING	1	1						
109	2	158552-52400	O-RING, 4E S42	1	1						
110	2	22190-120002	WASHER, SEAL 12	2	2						
111	2	22190-180002	WASHER, SEAL 18	2	2						
112	2	22217-140000	WASHER, SPRING 14	1	1						
113	2	22312-050140	PIN, PARALLEL M5X14	2	2						
114	2	22351-050010	PIN, SPRING 5.0X10	2	2						
116	2	24311-000070	O-RING, 1AP7.0	1	1						
117	2	24356-010180	O-RING, 4D1018	1	1						
118	2	24356-010200	O-RING, 4D1020	1	1						
119	2	26106-060102	BOLT, M6X 10 PLATED	1	1						
121	2	26450-080452	BOLT, M8X 45	4	4						
122	2	26776-140002	NUT, LOCK M14	1	1						
124	2	158552-52100	PUMP ASSY, FUEL FEED	1	1						
125	3	158552-52500	O-RING	1	1						

N:Old $\xleftarrow[\text{No}]{\text{Yes}}$ New. Q:Old $\xleftarrow[\text{Yes}]{\text{No}}$ New. R:Old $\xleftarrow[\text{Yes}]{\text{Yes}}$ New. S:Old $\xleftarrow[\text{No}]{\text{No}}$ New. W:Add. Z:Discontinued. F:Interchangeable by set. K:Q'ty Change

++ CONTINUE ++

Copyright (C) YANMAR CO., LTD. All RightsReserved.

Fig.11. FUEL INJECTION PUMP

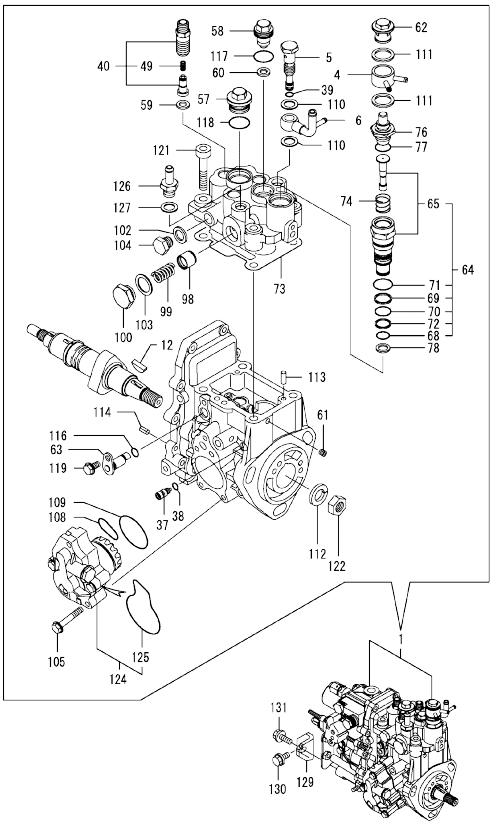

Remarks
(1) GOVERNOR ASSY(FIG.12) IS INCORPORATED IN THIS FUEL INJECTION PUMP(REF.NO.1).

(A)=3TNV88-BGGEH (D)=
(B)=3TNV88-BGGEHR (E)=
(C)= (F)=

No.	Lev.	Parts No.	Description	Q'ty (A)	(B)	(C)	(D)	(E)	(F)	I	R
126	2	119934-59910	JOINT, PIPE	1	1						
127	2	22190-120002	WASHER, SEAL 12	1	1						
129	1	119802-51250	RETAINER, PUMP	1	1						
130	1	26106-080162	BOLT, M8X 16 PLATED	1	1						
131	1	26106-080202	BOLT, M8X 20 PLATED	1	1						

N:Old ←Yes/No→ New. Q:Old ←No/Yes→ New. R:Old ←Yes/Yes→ New. S:Old ←No/No→ New. W:Add. Z:Discontinued. F:Interchangeable by set. K:Q'ty Change

Copyright (C) YANMAR CO., LTD. All RightsReserved.

Fig.12. GOVERNOR

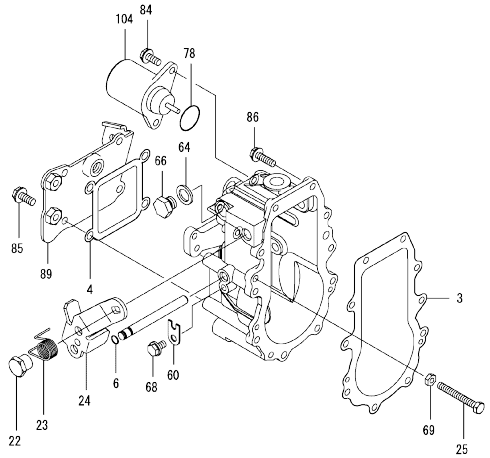

(A)=3TNV88-BGGEH
(B)=3TNV88-BGGEHR
(C)=
(D)=
(E)=
(F)=

No.	Lev.	Parts No.	Description	Q'ty (A)	(B)	(C)	(D)	(E)	(F)	I	R
3	2	158553-61050	GASKET	1	1						
4	2	158553-61070	GASKET	1	1						
6	2	129155-51280	O-RING, S6	1	1						
22	2	129255-61410	NUT, LOCK	1	1						
23	2	119807-61420	SPRING, RETURN	1	1						
24	2	129246-61441	LEVER, REGULATOR	1	1						
25	2	129155-61460	BOLT, IDLE	1	1						
60	2	119660-61901	RETAINER, SHAFT	1	1						
64	2	22190-120000	WASHER, SEAL 12	1	1						
66	2	23887-120002	PLUG, 12	1	1						
68	2	26106-060102	BOLT, M6X 10 PLATED	1	1						
69	2	26756-060002	NUT, LOCK M6	1	1						
78	2	158552-61900	O-RING	1	1						
84	2	26106-060142	BOLT, M6X 14 PLATED	2	2						
85	2	26106-060142	BOLT, M6X 14 PLATED	4	4						
86	2	26106-060202	BOLT, M6X 20 PLATED	10	10						
89	2	129246-61061	COVER, GOVERNOR CASE	1	1						
104	2	119653-77950	SOLENOID, STOP	1	1						

Remarks
* THIS FIGURE(GOVERNOR ASSY)IS INCORPORATED IN THE FUEL INJECTION PUMP ASSY(FIG.11).

N:Old ◄Yes/No► New. Q:Old ◄No/Yes► New, R:Old ◄Yes/Yes► New, S:Old ◄No/No► New, W:Add, Z:Discontinued, F:Interchangeable by set, K:Q'ty Change

Copyright (C) YANMAR CO., LTD. All RightsReserved.

Fig.13. FUEL INJECTION VALVE

(A)=3TNV88-BGGEH
(B)=3TNV88-BGGEHR
(C)=
(D)=
(E)=
(F)=

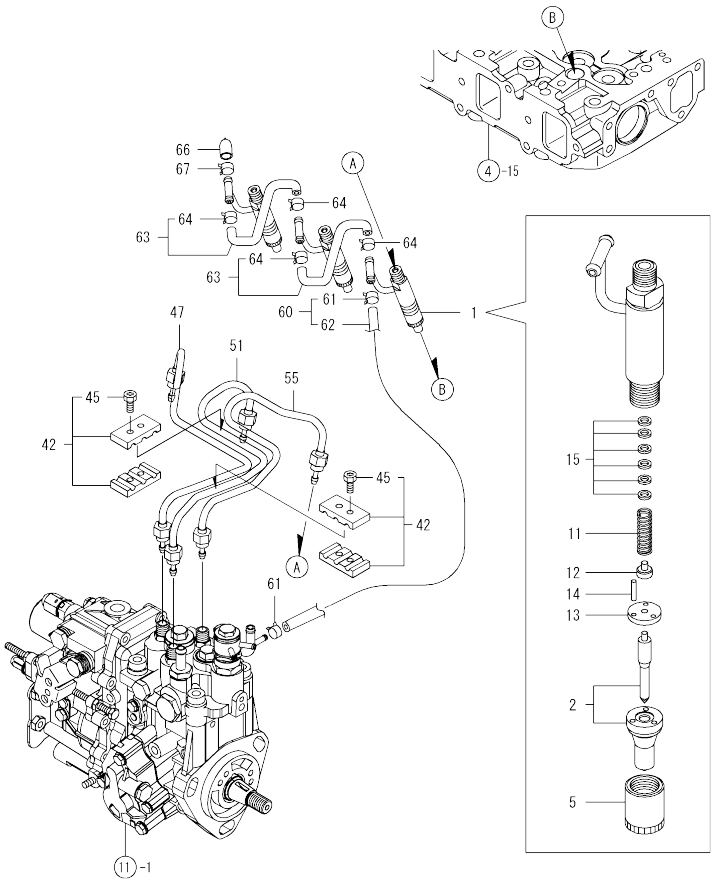

No.	Lev.	Parts No.	Description	Q'ty (A)	(B)	(C)	(D)	(E)	(F)	I	R
1	1	729283-53100	VALVE ASSY,INJECTION	3	3						
2	2	129283-53000	VALVE ASSY,INJECTION	3	3						
5	2	114250-53080	NUT, NOZZLE D16.95	3	3						
11	2	114250-53120	SPRING, NOZZLE	3	3						
12	2	114250-53130	SEAT, SPRING	3	3						
13	2	114250-53140	PLATE	3	3						
14	2	114250-53210	PIN	6	6						
15	2	119803-53400	SHIM SET	3	3						
42	1	129150-59120	RETAINER, PIPE	2	2						
45	2	129150-59131	BOLT, M4X14	4	4						
47	1	129004-59811	PIPE ASSY, INJECTION	1	1						
51	1	129004-59821	PIPE ASSY, INJECTION	1	1						
55	1	129004-59831	PIPE ASSY, INJECTION	1	1						
60	1	119802-59550	PIPE ASSY, RETURN	1	1						
61	2	124722-59050	CLIP, HOSE 9	2	2						
62	2	119802-59560	PIPE, FUEL RETURN	1	1						
63	1	129486-59551	PIPE ASSY, RETURN	2	2						
64	2	124722-59050	CLIP, HOSE 9	4	4						
66	1	119593-59581	CAP	1	1						
67	1	124060-77680	CLIP, HOSE 10	1	1						

N:Old ←Yes/No→ New. Q:Old ←No/Yes→ New. R:Old ←Yes/Yes→ New. S:Old ←No/No→ New. W:Add. Z:Discontinued. F:Interchangeable by set. K:Q'ty Change

Copyright (C) YANMAR CO., LTD. All RightsReserved.

Fig.14. FUEL LINE

(A)=3TNV88-BGGEH
(B)=3TNV88-BGGEHR
(C)=
(D)=
(E)=
(F)=

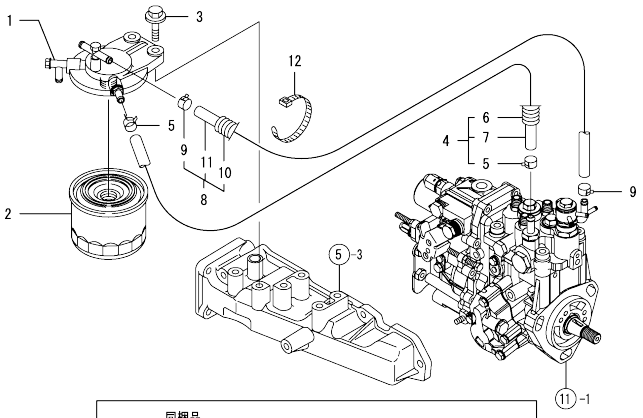

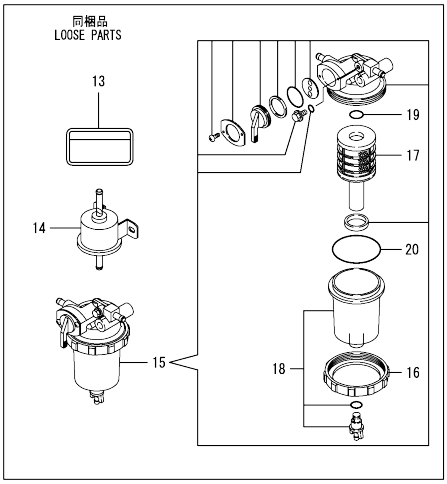

No.	Lev.	Parts No.	Description	Q'ty (A)	(B)	(C)	(D)	(E)	(F)	I	R
1	1	129004-55612	BRACKET, FILTER	1	1						
2	1	119802-55810	FILTER,FO	1	1						
3	1	26106-080302	BOLT, M8X 30 PLATED	2	2						
4	1	129044-59010	PIPE, D13/7.5X220	1	1						
5	2	124766-59050	CLIP, HOSE 12	2	2						
6	2	129044-59100	TUBE, CORRUGATED	1	1						
7	2	129044-59510	PIPE, FUEL 220	1	1						
8	1	129950-59311	PIPE, FUEL	1	1						
9	2	124766-59050	CLIP, HOSE 12	2	2						
10	2	129961-59110	TUBE, CORRUGATED	1	1						
11	2	105025-59580	PIPE, FUEL	1	1						
12	1	121750-59890	BAND, 140	1	1						
13	1	114110-07760	LABEL, FUEL CAUTION	1	1						
14	1	119225-52102	PUMP ASSY, FUEL FEED	1	1						
15	1	119802-55700	SEPARATOR ASSY	1	1						
16	2	129100-55690	RING, RETAINING	1	1						
17	2	119802-55710	ELEMENT	1	1						
18	2	119802-55730	CUP ASSY	1	1						
19	2	24311-000160	O-RING, 1AP16.0	1	1						
20	2	24321-000650	O-RING, 1AG65.0	1	1						

N:Old ←Yes/No→ New. Q:Old ←No/Yes→ New. R:Old ←Yes/Yes→ New. S:Old ←No/No→ New. W:Add. Z:Discontinued. F:Interchangeable by set. K:Q'ty Change

Copyright (C) YANMAR CO., LTD. All RightsReserved.

Fig.15. STARTING MOTOR

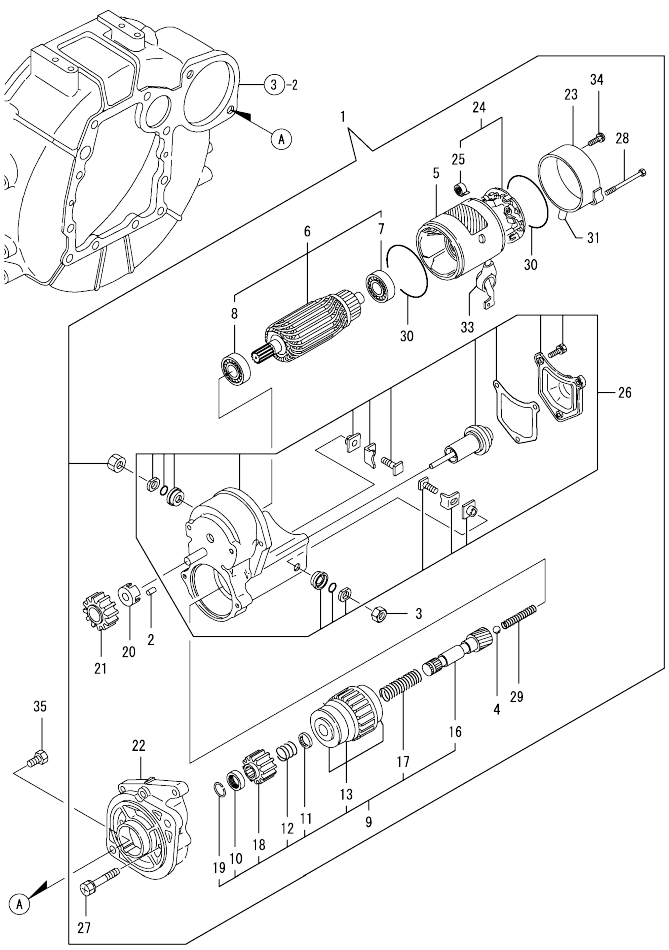

(A)=3TNV88-BGGEH
(B)=3TNV88-BGGEHR
(C)=
(D)=
(E)=
(F)=

No.	Lev.	Parts No.	Description	Q'ty (A)	(B)	(C)	(D)	(E)	(F)	I	R
1	1	129129-77010	STARTER ASSY	1	1						
2	2	X0283060061	ROLLER	5	5						
3	2	X9490561370	NUT	1	1						
4	2	X9491200240	BALL	1	1						
5	2	129129-77210	YOKE ASSY	1	1						
6	2	129129-77220	ARMATURE ASSY	1	1						
7	3	129129-77230	BEARING	1	1						
8	3	129129-77240	BEARING	1	1						
9	2	129129-77250	STARTER	1	1						
10	3	X0280210230	NUT	1	1						
11	3	X0283270140	RETAINER	1	1						
12	3	X9491703371	SPRING, COIL	1	1						
13	3	129129-77390	CLUTCH ASSY	1	1						
16	3	129129-77400	SHAFT	1	1						
17	3	129129-77410	SPRING, COIL	1	1						
18	3	129129-77420	PINION, STARTER	1	1						
19	3	129129-77430	RING	1	1						
20	2	129129-77260	RETAINER	1	1						
21	2	129129-77270	PINION	1	1						
22	2	129129-77280	HOUSING	1	1						
23	2	129129-77290	FRAME	1	1						
24	2	129129-77300	HOLDER ASSY	1	1						
25	3	X9491730461	SPRING	4	4						
26	2	129129-77310	SWITCH ASSY	1	1						
27	2	129129-77320	BOLT	2	2						
28	2	129129-77330	BOLT	2	2						
29	2	129129-77340	SPRING	1	1						
30	2	129129-77350	O-RING	2	2						
31	2	129129-77362	COVER	1	1						
33	2	129129-77380	CAP	1	1						
34	2	129129-77460	SCREW	2	2						
35	1	26116-120252	BOLT, M12X 25 PLATED	2	2						

N:Old ←Yes/No→ New. Q:Old ←No/Yes→ New. R:Old ←Yes/Yes→ New. S:Old ←No/No→ New. W:Add. Z:Discontinued. F:Interchangeable by set. K:Q'ty Change

Copyright (C) YANMAR CO., LTD. All RightsReserved.

Fig.16. GENERATOR

(A)=3TNV88-BGGEH
(B)=3TNV88-BGGEHR
(C)=
(D)=
(E)=
(F)=

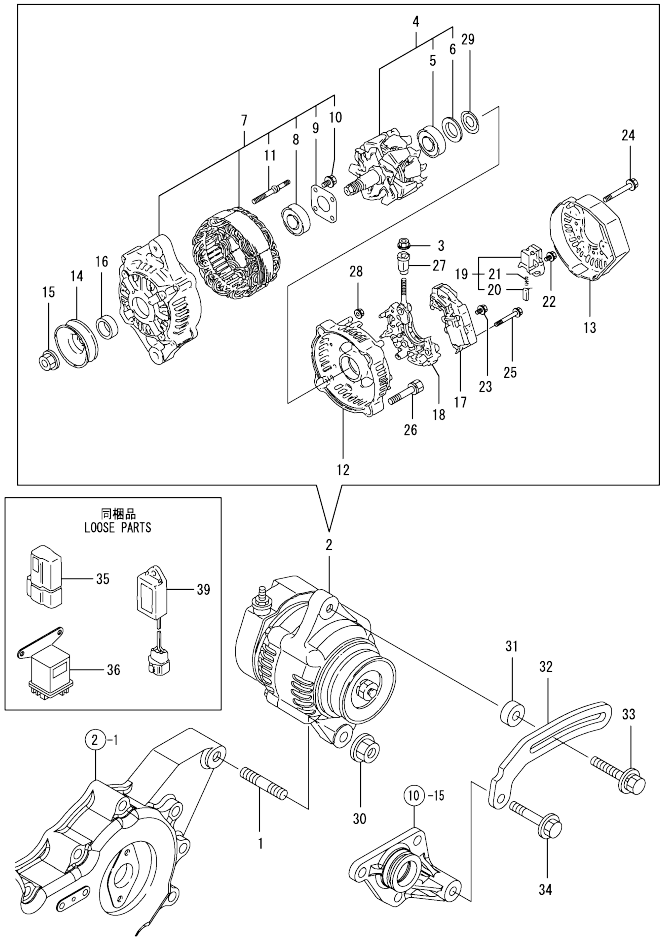

No.	Lev.	Parts No.	Description	Q'ty (A)	(B)	(C)	(D)	(E)	(F)	I	R
1	1	129795-01900	STUD	1	1						
2	1	129423-77200	GENERATOR, 12V-40A	1	1						
3	2	X9490561001	NUT	1	1						
4	2	119620-77380	ROTOR ASSY	1	1						
5	3	123501-79240	BEARING, BALL	1	1						
6	3	119620-79250	COVER	1	1						
7	2	119620-77421	FRAME ASSY, DRIVE	1	1						
8	3	119620-79200	BEARING, BALL	1	1						
9	3	119620-79210	PLATE, RETAINER	1	1						
10	3	119620-79220	SCREW	4	4						
11	3	119620-79230	STUD	2	2						
12	2	119620-77440	FRAME ASSY	1	1						
13	2	129240-79300	COVER	1	1						
14	2	119620-77461	PULLEY	1	1						
15	2	119620-77471	NUT	1	1						
16	2	119620-77490	COLLAR	1	1						
17	2	129423-77710	REGULATOR ASSY	1	1						
18	2	119620-79260	HOLDER	1	1						
19	2	129052-79270	HOLDER, BRUSH	1	1						
20	3	119620-77480	BRUSH ASSY	2	2						
21	3	119620-79280	SPRING	2	2						
22	2	119620-79290	SCREW	6	6						
23	2	119620-79300	SCREW	1	1						
24	2	119620-79310	BOLT	3	3						
25	2	119620-79320	SCREW	2	2						
26	2	119620-79330	BOLT	2	2						
27	2	119620-79340	BUSH, INSULATION	1	1						
28	2	119620-79350	NUT	2	2						
29	2	119620-79360	WASHER, THRUST	1	1						
30	1	26306-100002	NUT, M10	1	1						
31	1	119940-77270	SPACER, GENERATOR	1	1						
32	1	119940-77330	ADJUSTER	1	1						
33	1	129972-77341	BOLT, ADJUSTER L=50	1	1						
34	1	26106-080452	BOLT, M8X 45 PLATED	1	1						
35	1	119643-66900	DIODE	1	1						
36	1	119650-77910	RELAY ASSY, GLOW	1	1						
39	1	129211-77920	TIMER	1	1						

N:Old ←Yes/No→ New. Q:Old ←No/Yes→ New. R:Old ←Yes/Yes→ New. S:Old ←No/No→ New. W:Add. Z:Discontinued. F:Interchangeable by set. K:Q'ty Change

Copyright (C) YANMAR CO., LTD. All RightsReserved.

Fig.17. GASKET SET

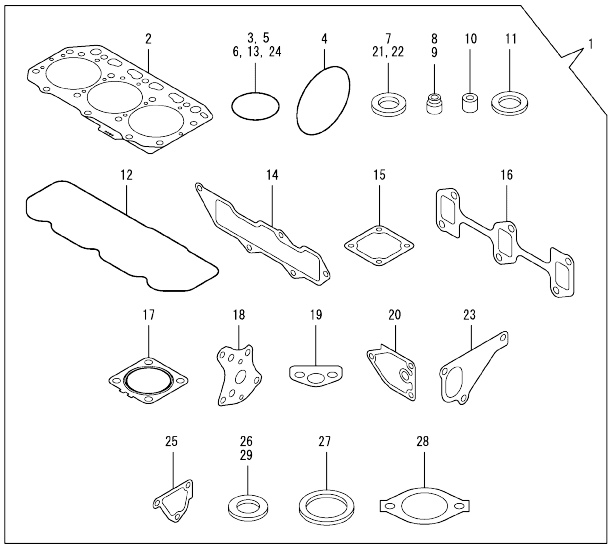

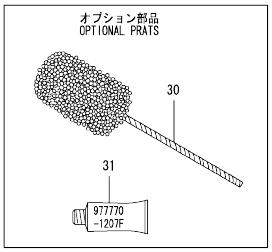

(A)=3TNV88-BGGEH
(B)=3TNV88-BGGEHR
(C)=
(D)=
(E)=
(F)=

No.	Lev.	Parts No.	Description	Q'ty (A)	(B)	(C)	(D)	(E)	(F)	I	R
1	1	729005-92630	GASKET SET	1	1						1
2	2	129001-01340	GASKET, HEAD	1	1						
3	2	119609-32040	O-RING, P16	2	2						
4	2	121850-51960	O-RING	1	1						
5	2	24311-000320	O-RING, 1AP32.0	2	2						
6	2	24341-000240	O-RING, 1AS24.0	1	1						
7	2	22190-220002	WASHER, SEAL 22	1	1						
8	2	121400-11340	SEAL, VALVE STEM	3	3						
9	2	124460-11340	SEAL, VALVE STEM	3	3						
10	2	119802-11870	PROTECTOR, NOZZLE	3	3						
11	2	119625-11880	SEAT, NOZZLE	3	3						
12	2	129004-11310	GASKET, BONNET	1	1						
13	2	24311-000120	O-RING, 1AP12.0	3	3						
14	2	129001-12110	GASKET, MANIFOLD	1	1						
15	2	129150-77511	GASKET	1	1						
16	2	129150-13110	GASKET	1	1						
17	2	129004-13200	GASKET, SILENCER	1	1						
18	2	129150-32020	GASKET, PUMP	1	1						
19	2	129150-35042	GASKET	1	1						
20	2	129150-35111	GASKET	1	1						
21	2	22190-080002	WASHER, SEAL 6	2	2						
22	2	22190-100002	WASHER, SEAL 10	2	2						
23	2	129486-42021	GASKET, WATER PUMP	1	1						
24	2	129486-42140	O-RING, G30	1	1						
25	2	124395-49840	GASKET	1	1						
26	2	23414-080000	GASKET, 8X1.0	1	1						
27	2	129150-49811	GASKET, THERMOSTAT	1	1						
28	2	129795-49551	GASKET	1	1						
29	2	124465-44950	GASKET, 16	2	2						
30	1	129400-92430	HONE	1	1						1
31	1	977770-1207F	GASKET.LIQUID	1	1						1

Remarks
(1) OPTIONAL PART.

N:Old $\frac{\text{Yes}}{\text{No}}$ New. Q:Old $\frac{\text{No}}{\text{Yes}}$ New. R:Old $\frac{\text{Yes}}{\text{Yes}}$ New. S:Old $\frac{\text{No}}{\text{No}}$ New. W:Add. Z:Discontinued. F:Interchangeable by set. K:Q'ty Change

Copyright (C) YANMAR CO., LTD. All RightsReserved.

Parts No. Index

Parts No.	Fig. No.	Ref. No.
105025-59580	14	11
114110-07760	14	13
114250-39450	9	27
114250-53080	13	5
114250-53120	13	11
114250-53130	13	12
114250-53140	13	13
114250-53210	13	14
118400-44670	10	50
118400-44720	10	51
119131-18320	6	5
119225-52102	14	14
119255-44660	10	54
119593-59581	13	66
119609-32040	2	9
	17	3
119620-01750	3	3
119620-77380	16	4
119620-77421	16	7
119620-77440	16	12
119620-77461	16	14
119620-77471	16	15
119620-77480	16	20
119620-77490	16	16
119620-79200	16	8
119620-79210	16	9
119620-79220	16	10
119620-79230	16	11
119620-79250	16	6
119620-79260	16	18
119620-79280	16	21
119620-79290	16	22
119620-79300	16	23
119620-79310	16	24
119620-79320	16	25
119620-79330	16	26
119620-79340	16	27
119620-79350	16	28
119620-79360	16	29
119625-11880	4	32
	17	11
119640-01640	3	8
119643-66900	16	35
119650-77910	16	36
119653-77950	12	104
119660-61901	12	60
119802-01561	2	5
119802-03110	4	43
119802-03121	4	44
119802-03130	4	45

Parts No.	Fig. No.	Ref. No.
119802-03141	4	46
119802-11260	4	6
119802-11270	4	7
119802-11280	4	8
119802-11870	4	31
	17	10
119802-12500	5	12
119802-12560	5	16
119802-25071	7	13
119802-25101	7	10
119802-25901	7	16
119802-35100	9	21
119802-35110	9	22
119802-39450	9	29
119802-49113	10	10
119802-49730	10	40
119802-51090	11	12
119802-51250	11	129
119802-51560	11	58
119802-51590	11	64
119802-51600	11	65
119802-51680	11	69
119802-51690	11	70
119802-55700	14	15
119802-55710	14	17
119802-55730	14	18
119802-55810	14	2
119802-59550	13	60
119802-59560	13	62
119803-01520	2	4
119803-21200	8	4
119803-25050	7	9
119803-53400	13	15
119803-77520	5	8
119807-61420	12	23
119808-12540	5	14
119831-42290	10	24
119866-12541	5	15
119910-12210	5	11
119934-01800	2	3
119934-59910	11	126
119940-77270	16	31
119940-77330	16	32
120130-11860	4	29
120270-54410	4	34
121023-01551	2	19
121111-21501	8	11
121250-44901	10	35
121267-44760	10	26
121400-11340	4	25

Parts No.	Fig. No.	Ref. No.
121400-11340	17	8
121450-42450	10	34
121520-34810	9	17
121550-23200	8	26
121750-59890	14	12
121850-21680	8	10
121850-42410	10	8
121850-51960	2	10
	17	4
123501-79240	16	5
123900-13610	6	3
123900-13630	6	4
124060-01050	1	11
124060-77680	13	67
124160-01751	2	6
	4	39
124160-01910	1	12
		13
124160-11360	4	51
124160-39140	9	28
124240-01871	2	7
124395-49840	10	17
	17	25
124460-11340	4	26
	17	9
124465-44950	10	36
		37
	17	29
124550-21600	8	14
124722-59050	10	41
		44
	13	61
		64
124766-59050	14	5
		9
129001-01250	1	4
129001-01340	1	28
	17	2
129001-02931	1	29
129001-12110	5	4
	17	14
129001-32001	9	1
129001-91841	2	11
129004-03010	4	41
129004-03080	5	1
129004-11241	4	3
129004-11251	4	4
129004-11310	4	48
	17	12
129004-11350	4	40

Parts No.	Fig. No.	Ref. No.
129004-11650	4	10
129004-11900	4	33
129004-12101	5	3
129004-12520	5	13
129004-13109	6	1
129004-13200	6	7
	17	17
129004-14580	7	3
129004-34802	9	16
129004-42001	10	1
129004-42040	10	15
129004-49610	10	38
129004-49620	10	42
129004-49711	10	39
129004-49721	10	43
129004-55612	14	1
129004-59811	13	47
129004-59821	13	51
129004-59831	13	55
129005-11100	4	21
129005-21650	8	8
129005-22500	8	17
129005-22950	8	34
129005-59830	9	30
129008-11700	4	15
129008-21000	8	1
129008-22080	8	15
129008-22900	8	32
129008-51390	11	40
129008-77800	4	54
129008-77820	4	55
129030-44740	10	25
129044-44500	10	45
129044-44600	10	48
129044-59010	14	4
129044-59100	14	6
129044-59510	14	7
129052-79270	16	19
129100-01580	3	1
		14
	8	2
129100-01640	3	15
129100-01730	3	6
129100-01760	3	7
129100-11112	4	22
129100-23910	8	29
129100-35140	9	23
129100-35301	9	19
129100-42051	10	3
129100-42121	10	4

Parts No. Index

Parts No.	Fig. No.	Ref. No.
129100-55690	14	16
129107-44590	10	47
129129-77010	15	1
129129-77210	15	5
129129-77220	15	6
129129-77230	15	7
129129-77240	15	8
129129-77250	15	9
129129-77260	15	20
129129-77270	15	21
129129-77280	15	22
129129-77290	15	23
129129-77300	15	24
129129-77310	15	26
129129-77320	15	27
129129-77330	15	28
129129-77340	15	29
129129-77350	15	30
129129-77362	15	31
129129-77380	15	33
129129-77390	15	13
129129-77400	15	16
129129-77410	15	17
129129-77420	15	18
129129-77430	15	19
129129-77460	15	34
129150-01200	1	27
129150-02020	1	6
129150-02450	7	4
129150-02871	1	32
129150-02931	1	24
129150-02941	1	35
129150-03070	4	42
129150-11230	4	11
129150-11280	4	9
129150-11370	4	14
129150-11750	4	13
129150-11810	4	30
129150-13110	6	2
	17	16
129150-14101	7	6
129150-14200	7	1
129150-14400	7	2
129150-23601	8	27
129150-23611	8	30
129150-25301	7	15
129150-32020	9	14
	17	18
129150-35042	9	18
	17	19

Parts No.	Fig. No.	Ref. No.
129150-35111	9	24
	17	20
129150-35170	9	25
129150-49811	10	29
	17	27
129150-59120	13	42
129150-59131	13	45
129150-77511	5	7
	17	15
129155-42350	10	23
129155-49801	10	28
129155-51280	12	6
129155-61460	12	25
129202-22300	8	21
129211-77920	16	39
129240-79300	16	13
129246-61061	12	89
129246-61441	12	24
129255-61410	12	22
129283-53000	13	2
129350-49530	10	30
129400-92430	17	30
129410-03990	5	2
129423-77200	16	2
129423-77710	16	17
129486-01670	3	18
129486-42021	10	14
	17	23
129486-42140	10	16
	17	24
129486-59551	13	63
129508-44550	10	46
129601-44560	10	53
129601-44610	10	49
129602-49010	10	55
129612-49040	10	56
129795-01780	3	17
129795-01900	16	1
129795-01950	2	8
129795-02412	1	9
129795-11120	4	23
129795-11180	4	24
129795-21661	8	9
129795-49551	10	31
	17	28
129900-07900	4	1
129916-49740	10	11
129950-59311	14	8
129961-59110	14	10
129972-77341	16	33

Parts No.	Fig. No.	Ref. No.
158552-51151	7	17
158552-51571	11	59
		60
158552-51580	11	63
158552-51600	11	73
158552-51670	11	6
158552-51781	11	99
158552-52100	11	124
158552-52310	11	108
158552-52400	11	109
158552-52500	11	125
158552-61900	12	78
158553-51551	11	4
158553-51630	11	74
158553-51640	11	76
158553-51660	11	77
158553-51670	11	68
158553-51680	11	78
158553-51770	11	105
158553-61050	12	3
158553-61070	12	4
158557-51570	11	61
158563-51281	11	38
		39
158563-51330	11	49
158600-51270	11	37
158601-51550	11	57
158601-51570	11	62
158601-51650	11	5
158601-51770	11	98
158601-51790	11	100
171051-01921	1	5
171056-49120	10	33
171340-21590	8	12
171420-01600	3	2
22190-080002	2	12
	9	31
		33
	17	21
22190-100002	9	34
	17	22
22190-120000	12	64
22190-120002	11	102
		110
		127
22190-180002	11	103
		111
22190-220002	3	10
	17	7
22217-140000	7	18

Parts No.	Fig. No.	Ref. No.
22217-140000	11	112
22252-000260	8	22
22312-050140	11	113
22351-030010	8	7
22351-050010	11	114
22351-060012	4	35
22512-070140	7	7
	8	5
22857-500100	4	49
		50
23000-070000	5	17
23010-038000	10	57
23010-044000	10	58
23414-080000	10	18
	17	26
23857-030000	9	32
23876-010000	10	12
23876-020000	10	13
23887-120002	11	104
	12	66
24311-000070	11	116
24311-000120	4	52
	17	13
24311-000160	14	19
24311-000320	2	13
	4	53
	17	5
24321-000650	14	20
24341-000240	2	20
	17	6
24356-010180	11	117
24356-010200	11	71
		118
24372-000150	11	72
26014-060122	10	52
26106-060102	11	119
	12	68
26106-060142	12	84
		85
26106-060162	2	21
26106-060202	12	86
26106-060302	10	27
26106-080122	10	19
26106-080142	7	8
26106-080162	2	14
		15
	3	11
	4	2
	10	20
	11	130

Parts No. Index

Parts No.	Fig. No.	Ref. No.
26106-080202	5	5
		9
	9	26
	11	131
26106-080222	10	32
26106-080252	3	12
	4	36
26106-080302	2	16
	14	3
26106-080352	3	19
	4	37
	9	20
26106-080402	7	14
26106-080452	3	13
		13 -1
	10	21
	16	34
26106-080502	3	20
	4	38
26106-080552	2	17
26106-080602	10	22
26106-080802	5	6
		10
26116-120252	15	35
26206-100252	3	4
26206-100302	3	5
26306-080002	2	18
	6	6
26306-100002	16	30
26366-060002	9	35
26450-060252	9	15
26450-080452	11	121
26756-060002	12	69
26776-140002	7	19
	11	122
27241-120000	1	14
27241-300000	1	10
27241-400000	4	20
27310-080001	4	27
719803-01500	2	1
729005-01560	1	1
729005-92630	17	1
729283-51390	11	1
729283-53100	13	1
729402-23100	8	23
977770-1207F	17	31
X0280210230	15	10
X0283060061	15	2
X0283270140	15	11
X9490561001	16	3

Parts No.	Fig. No.	Ref. No.
X9490561370	15	3
X9491200240	15	4
X9491703371	15	12
X9491730461	15	25

Parts No.	Fig. No.	Ref. No.

Parts No.	Fig. No.	Ref. No.