YANMAR

PARTS CATALOG

0CW10-M67200EN

Last update Apr., 2016

PREFACE

1. This parts catalog is the 1st edition of 3TNV88-BPAMM for AMMANN.

Pub.No. : 0CW10-G67200
Published : September, 2010

2. Model name

Engine model	Vehicle	Vehicle made by
3TNV88-BPAMM	VIBRATION ROLLER	AMMANN

Directions for the Parts Catalog.

1.The parts stipulated in this Parts Catalog are not necessarily standard equipped parts.
2.Parts may change without prior notice.
3.The following is an example of the Parts Catalog format.

0CF10-G21601 29. FUEL INJECTION PUMP(W/BOOST)

(A)=4JH-DT
(B)=4JH-DTZ
(C)=4JH-DTZP
(D)=4JH-DTZA
(E)=4JH-DTZY
(F)=

① REF.	② LEV.	PARTS NO.	DESCRIPTION	Q'TY (A)	(B)	(C)	(D)	(E)	(F)	③ I	⑤ R
1	1	729595-51390	FUEL INJECTION PUMP	1	1	1	1	1			1
1-1	1	729595-51391	FUEL INJECTION PUMP	1	1	1	1	1		N	1
	(A=E00185)	(B=E00200)									
3	2	26022-060162	SCREW M 6X 16	9	9	9	9	9			
3-1 ④	2	26022-060162	SCREW M 6X 16	4	4	4	4	4		K	
	(A=E00156)	(B=E00156)	(C=E00156) (D=E00156)	(E=E00156)							
4	2	129470-51040	CAMSHAFT	1	1	1	1	1			
5	2	122710-51050	BEARING, ROLLER	2	2	2	2	2			
6	2	129470-51060	RETAINER	1	1	1	1	1			

Remarks
(1) BOOST COMPEMSATOR TYPE. OPTIONAL
PART, TO E00155,(4JH-DT, 4JH-DTZ

① Ref. No.

The Ref. No. listed may not be in accordance with the illustration Ref. No.

(Ex.) Illustration No. 1 List Ref No. 1 (Before change) → 1- 1 (After change)

For interchangeable symbols N, R and K, illustrations for new parts may be abbreviated.

② Lev. (Level)

Level indication
The numbers below indicate the level of relativity towards the main part.
1 ----- Main parts (Assembly parts)
2 ----- Sub component included in " 1 ".
3 ----- Sub component included in " 2 ".
Note) Parts that are not for sale are partially illustrated but not listed.

③ Interchangeability Mark

When a part change takes place, one of the following interchangeability symbols is indicated beside the part.

Symbol	Interchangeability	Contents note
N	Old ← Yes / No → New	New Part is interchangeable for Old Part but Old Part is not interchangeable for New Part.
Q	Old ← No / Yes → New	New Part is not interchangeable for Old Part but Old Part is interchangeable for New Part.
R	Old ← Yes / Yes → New	New/ Old Parts are both interchangeable.
S	Old ← No / No → New	New/ Old Parts are both not interchangeable.
W		Part newly added.
Z		Part discontinued.
F		Not interchangeable by a single part but interchangeable together with related parts.
K		Changes only for used parts quantities.

④ Effective Machine No.

When a part changes, the effective Machine No. will be indicated in the (A)-(F) column.

Product Symbol	Product No.	Product Symbol	Product No.
C	Clutch No. Compressor No.	F	Machine No. (Agricultural Equip.)
D	Drive No.	M	Machine No.
E	Engine No.		

Note 1) A date may follow the symbol. (Ex.) 1996.01
Note 2) " XXXXX " and " ZZZZZ " are for parts that could not be predicted or for engine models that could not be identified.
Note 3) (A=E00185) is the E (Engine Serial Number) for the column (A) model (in this case 4JH-DT) after the parts design change.

⑤ Remarks Mark

Figures or alphabets (symbols) are entered in the remarks column.
The comments (remarks) on parts that are indicated at the bottom of the illustration are the same symbols as those stated above.

Contents

0CW10-M67200

Fig. No.	Fig. Name
3TNV88-BPAMM	
1.	CYLINDER BLOCK
2.	GEAR HOUSING
3.	FLYWHEEL HOUSING & OIL SUMP
4.	CYLINDER HEAD & BONNET
5.	SUCTION MANIFOLD
6.	EXHAUST MANIFOLD
7.	CAMSHAFT & DRIVING GEAR
8.	CRANKSHAFT & PISTON
9.	LUB. OIL SYSTEM
10.	COOLING WATER SYSTEM
11.	FUEL INJECTION PUMP
12.	GOVERNOR
13.	FUEL INJECTION VALVE
14.	FUEL LINE
15.	STARTING MOTOR
16.	GENERATOR
17.	GASKET SET

Fig. No.	Fig. Name

Fig.1. CYLINDER BLOCK

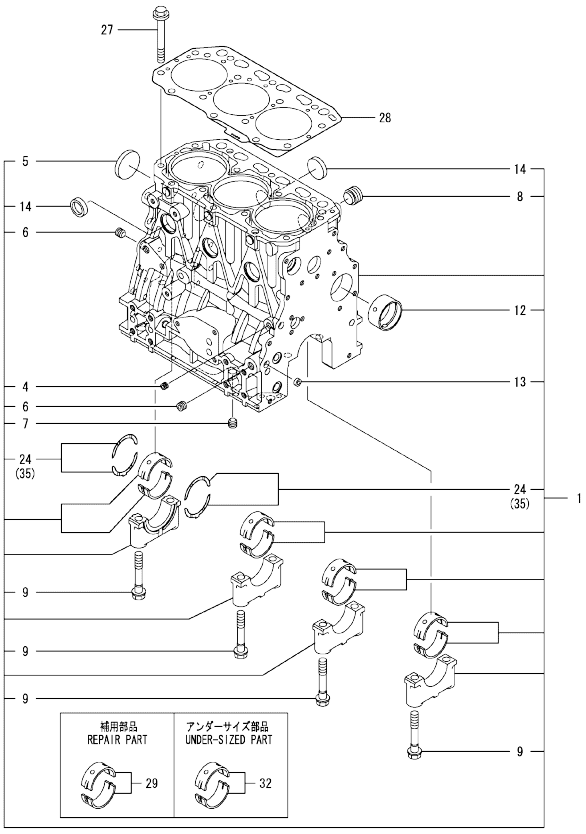

Remarks
(1)Repair part.
(2)Under-sized(U.S.=0.25)part.
(3)Over-sized(O.S.=0.25)part.

(A)=3TNV88-BPAMM (D)=
(B)= (E)=
(C)= (F)=

No.	Lev.	Parts No.	Description	Q'ty (A)	(B)	(C)	(D)	(E)	(F)	I	R
1	1	729005-01560	BLOCK ASSY, CYLINDER	1							
4	2	124060-01050	PLUG, PT1/8	1							
5	2	129001-01250	PLUG, 50	1							
6	2	124160-01910	PLUG, PT1/4	2							
7	2	124160-01910	PLUG, PT1/4	1							
8	2	171051-01921	PLUG, NPTF1	1							
9	2	129150-02020	BOLT, METAL CAP	8							
12	2	129795-02412	BUSH, CAMSHAFT	1							
13	2	27241-120000	PLUG, 12	2							
14	2	27241-300000	PLUG 30	6							
24	2	129150-02931	BEARING, THRUST	2							
27	1	129150-01200	BOLT, HEAD	14							
28	1	129001-01340	GASKET, HEAD	1							
29	1	129001-02931	BEARING, MAIN	4							1
32	1	129150-02871	BEARING, 0.25 US	4							2
35	1	129150-02941	BEARING, THRUST 0.25	1							3

N:Old ←Yes/No→ New. Q:Old ←No/Yes→ New. R:Old ←Yes/Yes→ New. S:Old ←No/No→ New. W:Add. Z:Discontinued. F:Interchangeable by set. K:Q'ty Change

Copyright (C) YANMAR CO., LTD. All RightsReserved.

Fig.2. GEAR HOUSING

(A)=3TNV88-BPAMM
(B)=
(C)=
(D)=
(E)=
(F)=

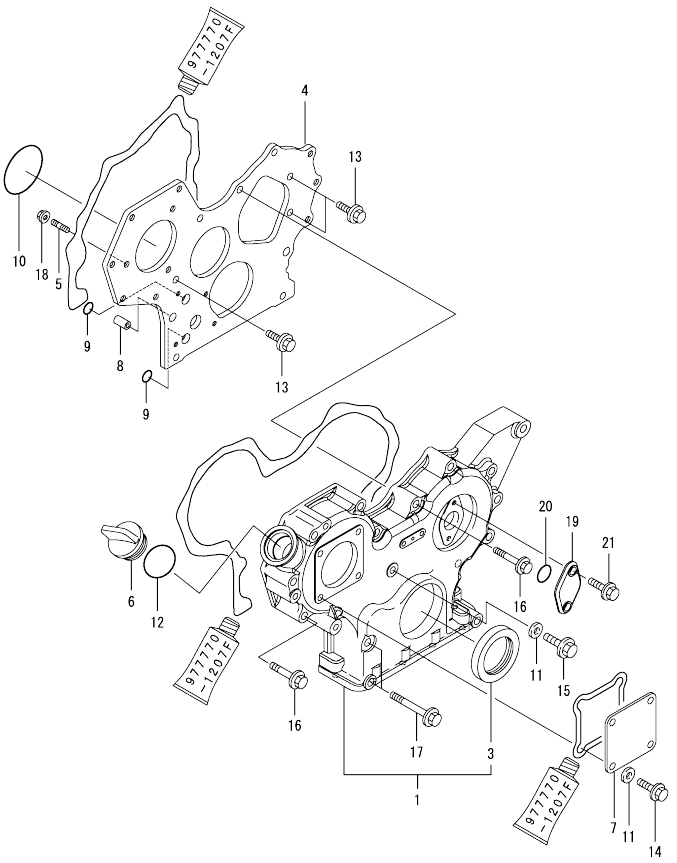

No.	Lev.	Parts No.	Description	Q'ty (A)	(B)	(C)	(D)	(E)	(F)	I	R
1	1	729630-01500	CASE ASSY, GEAR	1							
3	2	119934-01800	SEAL, OIL	1							
4	1	119803-01520	FLANGE, GEAR CASE	1							
5	1	119802-01561	STUD, M8X25	3							
6	1	124160-01751	COVER, FILLER	1							
7	1	124240-01871	COVER	1							
8	1	129795-01950	PIPE, KNOCK L=18	2							
9	1	119609-32040	O-RING, P16	2							
10	1	121850-51960	O-RING	1							
11	1	22190-080002	WASHER, SEAL 6	5							
12	1	24311-000320	O-RING, 1AP32.0	1							
13	1	26106-080162	BOLT, M8X 16 PLATED	3							
14	1	26106-080162	BOLT, M8X 16 PLATED	4							
15	1	26106-080302	BOLT, M8X 30 PLATED	1							
16	1	26106-080552	BOLT, M8X 55 PLATED	12							
17	1	26106-080852	BOLT, M8X 85 PLATED	3							
18	1	26306-080002	NUT, M8	3							
19	1	121023-01551	COVER	1							
20	1	24341-000240	O-RING, 1AS24.0	1							
21	1	26106-060162	BOLT, M6X 16 PLATED	2							

N:Old ◄Yes/No► New. Q:Old ◄No/Yes► New. R:Old ◄Yes/Yes► New. S:Old ◄No/No► New. W:Add. Z:Discontinued. F:Interchangeable by set. K:Q'ty Change

Copyright (C) YANMAR CO., LTD. All RightsReserved.

Fig.3. FLYWHEEL HOUSING & OIL SUMP

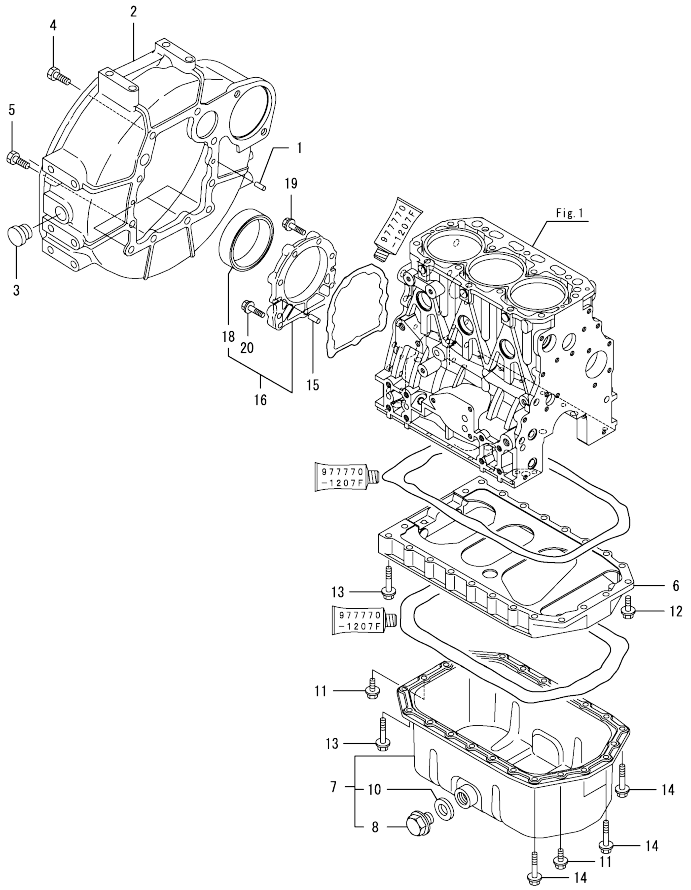

(A)=3TNV88-BPAMM (D)=
(B)= (E)=
(C)= (F)=

No.	Lev.	Parts No.	Description	Q'ty (A)	(B)	(C)	(D)	(E)	(F)	I	R
1	1	129100-01580	PIN, M8X16	2							
2	1	129612-01600	HOUSING, FLYWHEEL	1							
3	1	119620-01750	CAP	1							
4	1	26206-100252	BOLT, M10X 25 PLATED	6							
5	1	26206-100302	BOLT, M10X 30 PLATED	4							
6	1	129100-01730	SPACER, OIL SUMP	1							
7	1	129100-01760	SUMP ASSY, OIL	1							
8	2	119640-01640	PLUG, DRAIN M22	1							
10	2	22190-220002	WASHER, SEAL 22	1							
11	1	26106-080162	BOLT, M8X 16 PLATED	4							
12	1	26106-080252	BOLT, M8X 25 PLATED	2							
13	1	26106-080452	BOLT, M8X 45 PLATED	16							
14	1	26106-080502	BOLT, M8X 50 PLATED	4							
15	1	129100-01580	PIN, M8X16	2							
16	1	129100-01640	CASE ASSY, OIL SEAL	1							
18	2	129795-01780	SEAL, OIL	1							
19	1	129486-01670	BOLT, M8X30	6							
20	1	26106-080352	BOLT, M8X 35 PLATED	3							

N:Old ←Yes/No→ New. Q:Old ←No/Yes→ New. R:Old ←Yes/Yes→ New. S:Old ←No/No→ New. W:Add. Z:Discontinued. F:Interchangeable by set. K:Q'ty Change

Copyright (C) YANMAR CO., LTD. All RightsReserved.

Fig.4. CYLINDER HEAD & BONNET

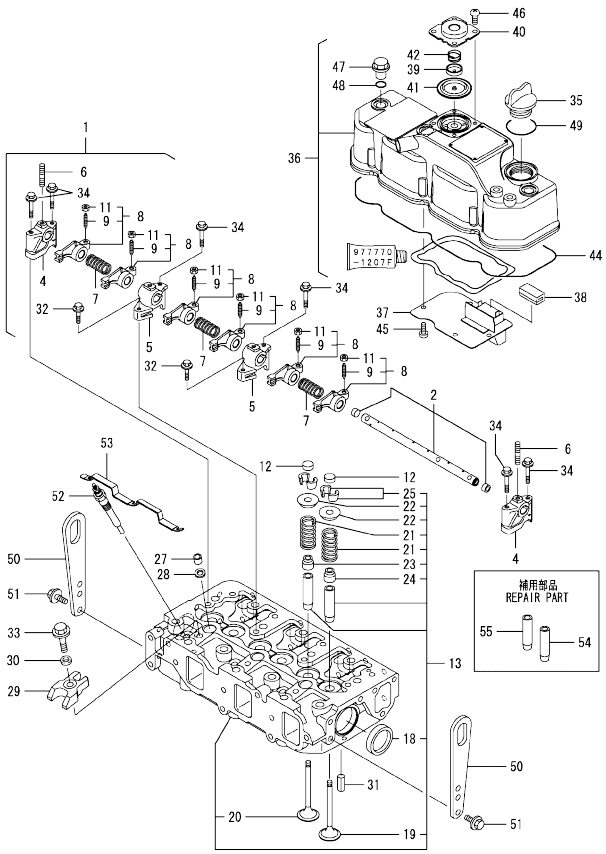

(A)=3TNV88-BPAMM
(B)=
(C)=
(D)=
(E)=
(F)=

No.	Lev.	Parts No.	Description	Q'ty (A)	(B)	(C)	(D)	(E)	(F)	I	R
1	1	129004-11241	SHAFT ASSY, ROCKER	1							
2	2	129004-11251	SHAFT, ROCKER ARM	1							
4	2	119802-11260	SUPPORT, ROCKER ARM	2							
5	2	119802-11270	SUPPORT, ROCKER ARM	2							
6	2	119802-11280	STUD	3							
7	2	129150-11280	SPRING	3							
8	2	129004-11650	ARM, ROCKER	6							
9	3	129150-11230	SCREW, VALVE ADJUST	6							
11	3	129150-11750	NUT, M8	6							
12	1	129150-11370	CAP, VALVE	6							
13	1	129008-11700	HEAD ASSY, CYLINDER	1							
18	2	27241-400000	PLUG, 40	2							
19	2	129005-11100	VALVE, INTAKE	3							
20	2	129100-11112	VALVE, EXHAUST	3							
21	2	129795-11120	SPRING, VALVE	6							
22	2	129795-11180	RETAINER, SPRING	6							
23	2	121400-11340	SEAL, VALVE STEM	3							
24	2	124460-11340	SEAL, VALVE STEM	3							
25	2	27310-080001	COTTER, 8	6							
27	1	119802-11870	PROTECTOR, NOZZLE	3							
28	1	119625-11880	SEAT, NOZZLE	3							
29	1	129004-11900	RETAINER, NOZZLE	3							
30	1	120270-54410	WASHER, INJECTOR	3							
31	1	22351-060012	PIN, SPRING 6.0X12	2							
32	1	26106-080252	BOLT, M8X 25 PLATED	2							
33	1	26106-080352	BOLT, M8X 35 PLATED	3							
34	1	26106-080502	BOLT, M8X 50 PLATED	6							
35	1	124160-01751	COVER, FILLER	1							
36	1	129004-11350	BONNET ASSY, HEAD	1							
37	2	129004-03010	PLATE	1							
38	2	129150-03070	BAFFLE, BREATHER	1							
39	2	119802-03110	PLATE	1							
40	2	119802-03121	COVER, DIAPHRAGM	1							
41	2	119802-03130	DIAPHRAGM	1							
42	2	119802-03141	SPRING, DIAPHRAGM	1							
44	2	129004-11310	GASKET, BONNET	1							
45	2	22857-500100	SCREW, 5X10	4							
46	2	22857-500100	SCREW, 5X10	4							
47	1	124160-11360	KNOB	3							
48	1	24311-000120	O-RING, 1AP12.0	3							
49	1	24311-000320	O-RING, 1AP32.0	1							
50	1	129900-07900	LIFTER	2							
51	1	26106-080162	BOLT, M8X 16 PLATED	4							
52	1	129008-77800	PLUG, GLOW	3							
53	1	129008-77820	CONNECTOR, GLOW PLUG	1							
54	1	120130-11860	GUIDE, VALVE	3							1
55	1	129150-11810	GUIDE, VALVE	3							1

Remarks
(1)Repair part.

N:Old $\xleftarrow[\text{No}]{\text{Yes}}$ New. Q:Old $\xleftarrow[\text{Yes}]{\text{No}}$ New. R:Old $\xleftarrow[\text{Yes}]{\text{Yes}}$ New. S:Old $\xleftarrow[\text{No}]{\text{No}}$ New. W:Add. Z:Discontinued. F:Interchangeable by set. K:Q'ty Change

Copyright (C) YANMAR CO., LTD. All RightsReserved.

Fig.5. SUCTION MANIFOLD

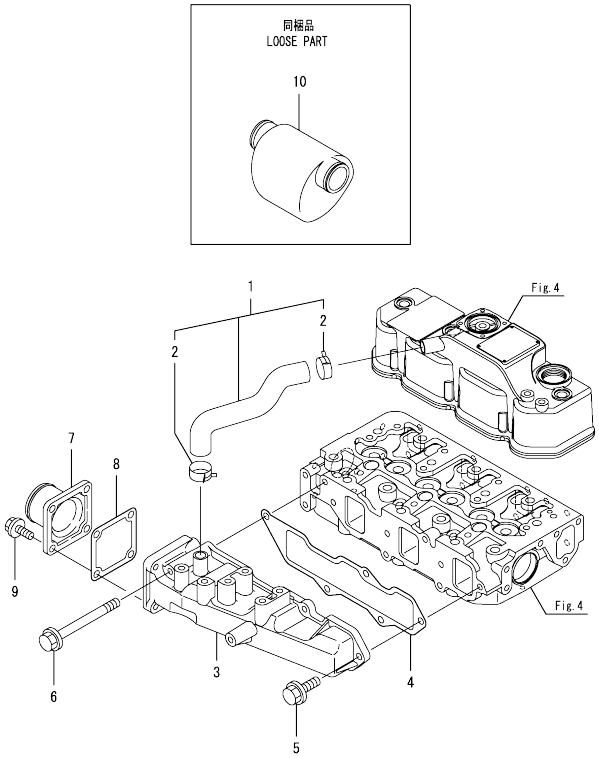

(A)=3TNV88-BPAMM (D)=
(B)= (E)=
(C)= (F)=

No.	Lev.	Parts No.	Description	Q'ty (A)	(B)	(C)	(D)	(E)	(F)	I	R
1	1	129004-03080	PIPE , BREATHER	1							
2	2	129410-03990	CLAMP 22	2							
3	1	129004-12101	MANIFOLD, AIR INTAKE	1							
4	1	129001-12110	GASKET, MANIFOLD	1							
5	1	26106-080202	BOLT, M8X 20 PLATED	4							
6	1	26106-080802	BOLT, M8X 80 PLATED	1							
7	1	129486-12581	JOINT, MANIFOLD	1							
8	1	129150-77511	GASKET	1							
9	1	26106-080202	BOLT, M8X 20 PLATED	4							
10	1	121855-12060	SILENCER ASSY	1							

N:Old ←Yes/No→ New. Q:Old ←No/Yes→ New. R:Old ←Yes/Yes→ New. S:Old ←No/No→ New. W:Add. Z:Discontinued. F:Interchangeable by set. K:Q'ty Change

Copyright (C) YANMAR CO., LTD. All RightsReserved.

0CW10-M67200 3TNV88-BPAMM

Fig.6. EXHAUST MANIFOLD

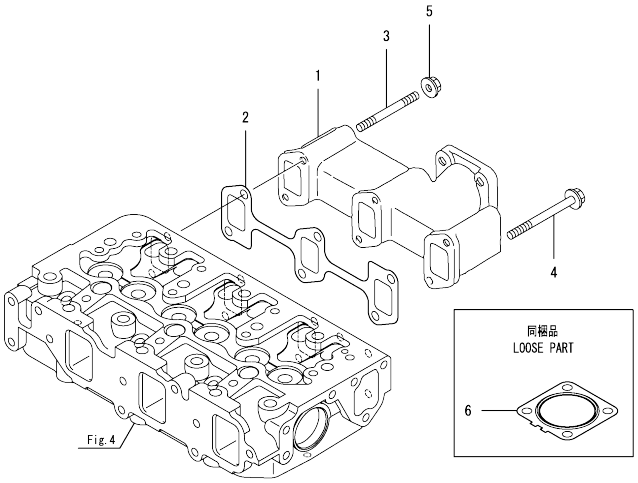

0CW10-M67200 Fig.6

(A)=3TNV88-BPAMM
(B)=
(C)=
(D)=
(E)=
(F)=

No.	Lev.	Parts No.	Description	Q'ty (A)	(B)	(C)	(D)	(E)	(F)	I	R
1	1	129100-13110	MANIFOLD, EXHAUST	1							
2	1	129150-13110	GASKET	1							
3	1	123900-13610	STUD, M8X80	2							
4	1	123900-13630	BOLT, M8X80	4							
5	1	26306-080002	NUT, M8	2							
6	1	129004-13200	GASKET, SILENCER	1							

N:Old ←Yes/No→ New. Q:Old ←No/Yes→ New. R:Old ←Yes/Yes→ New. S:Old ←No/No→ New. W:Add. Z:Discontinued. F:Interchangeable by set. K:Q'ty Change

Copyright (C) YANMAR CO., LTD. All RightsReserved.

Fig.7. CAMSHAFT & DRIVING GEAR

(A)=3TNV88-BPAMM
(B)=
(C)=
(D)=
(E)=
(F)=

No.	Lev.	Parts No.	Description	Q'ty (A)	(B)	(C)	(D)	(E)	(F)	I	R
1	1	129150-14200	TAPPET	6							
2	1	129150-14400	ROD, PUSH L=178	6							
3	1	129129-14580	CAMSHAFT ASSY	1							
4	2	129150-02450	BEARING, THRUST	1							
6	2	129150-14101	GEAR, CAMSHAFT	1							
7	2	22512-070140	KEY, 7X 14	1							
8	1	26106-080142	BOLT, M8X 14 PLATED	2							
9	1	119803-25050	SHAFT, IDLE	1							
10	1	119802-25101	GEAR ASSY, IDLE	1							
13	1	26106-080402	BOLT, M8X 40 PLATED	3							
14	1	129150-25301	BOLT	4							
15	1	119802-25901	GEAR, PUMP	1							
16	1	119802-25071	BUSH, IDLE GEAR	1							1

Remarks
(1)Repair part.

N:Old $\xleftarrow[\text{No}]{\text{Yes}}$ New. Q:Old $\xleftarrow[\text{Yes}]{\text{No}}$ New. R:Old $\xleftarrow[\text{Yes}]{\text{Yes}}$ New. S:Old $\xleftarrow[\text{No}]{\text{No}}$ New. W:Add. Z:Discontinued. F:Interchangeable by set. K:Q'ty Change

Copyright (C) YANMAR CO., LTD. All RightsReserved.

Fig.8. CRANKSHAFT & PISTON

(A)=3TNV88-BPAMM
(B)=
(C)=
(D)=
(E)=
(F)=

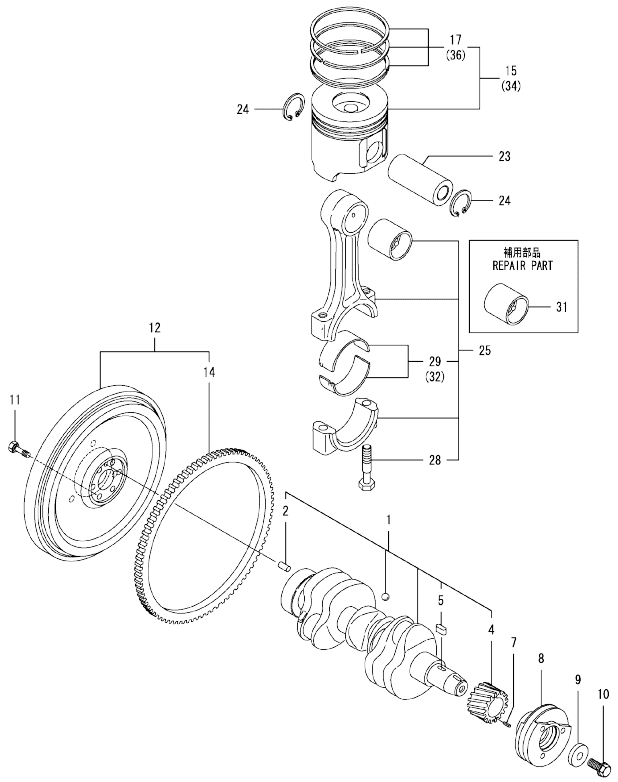

No.	Lev.	Parts No.	Description	Q'ty (A)	(B)	(C)	(D)	(E)	(F)	I	R
1	1	129008-21000	CRANKSHAFT ASSY	1							
2	2	129100-01580	PIN, M8X16	1							
4	2	119803-21200	GEAR, CRANKSHAFT	1							
5	2	22512-070140	KEY, 7X 14	1							
7	1	22351-030010	PIN, SPRING 3.0X10	1							
8	1	129004-21650	V-PULLEY, 110	1							
9	1	129795-21661	WASHER	1							
10	1	121850-21680	BOLT	1							
11	1	121111-21501	BOLT, FLYWHEEL	6							
12	1	129128-21590	FLYWHEEL ASSY	1							
14	2	119865-21600	GEAR, RING	1							
15	1	129005-22080	PISTON ASSY	3							
17	2	129005-22500	RING SET, PISTON	3							
23	1	129202-22300	PIN, PISTON D26 L70	3							
24	1	22252-000260	RING, 26	6							
25	1	729402-23100	ROD ASSY, CONNECTING	3							
28	2	121550-23200	BOLT, CONNECTING ROD	6							
29	2	129150-23601	BEARING, CRANK PIN	3							
31	1	129100-23910	BEARING, PISTON PIN	3							1
32	1	129150-23611	BEARING, 0.25 US	3							2
34	1	129005-22900	PISTON ASSY, 0.25 OS	3							3
36	2	129005-22950	RING SET, 0.25 OS	3							3

Remarks
(1)Repair part.
(2)Under-sized(U.S.=0.25)part.
(3)Over-sized(O.S.=0.25)part.

N:Old ←Yes/No→ New. Q:Old ←No/Yes→ New. R:Old ←Yes/Yes→ New. S:Old ←No/No→ New. W:Add. Z:Discontinued. F:Interchangeable by set. K:Q`ty Change

Copyright (C) YANMAR CO., LTD. All RightsReserved.

Fig.9. LUB. OIL SYSTEM

(A)=3TNV88-BPAMM
(B)=
(C)=
(D)=
(E)=
(F)=

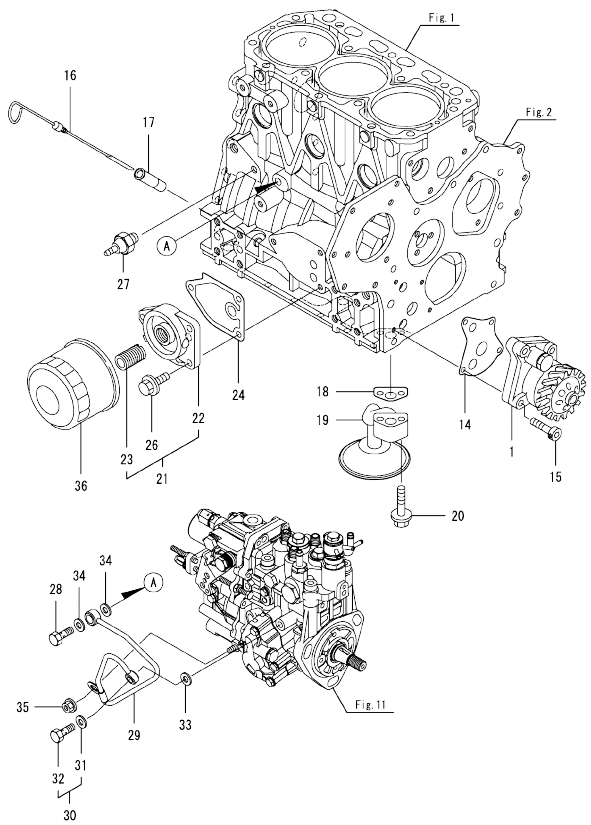

No.	Lev.	Parts No.	Description	Q'ty (A)	(B)	(C)	(D)	(E)	(F)	I	R
1	1	129001-32001	PUMP ASSY, OIL	1							
14	1	129150-32020	GASKET, PUMP	1							
15	1	26450-060252	BOLT, M6X 25	4							
16	1	129004-34802	DIPSTICK, OIL	1							
17	1	121520-34810	GUIDE, DIPSTICK	1							
18	1	129150-35042	GASKET	1							
19	1	129100-35301	PIPE ASSY, OIL INLET	1							
20	1	26106-080352	BOLT, M8X 35 PLATED	2							
21	1	119802-35100	BRACKET ASSY, FILTER	1							
22	2	119802-35110	BRACKET, FILTER	1							
23	2	129100-35140	STUD	1							
24	1	129150-35111	GASKET	1							
26	1	26106-080202	BOLT, M8X 20 PLATED	3							
27	1	114250-39450	SWITCH, 0.5KG	1							
28	1	124160-39140	BOLT, PIPE JOINT M10	1							
29	1	119802-39450	PIPE ASSY, OIL	1							
30	1	129005-59830	BOLT ASSY, JOINT M8	1							
31	2	22190-080002	WASHER, SEAL 6	1							
32	2	23857-030000	BOLT, JOINT 3	1							
33	1	22190-080002	WASHER, SEAL 6	1							
34	1	22190-100002	WASHER, SEAL 10	2							
35	1	26366-060002	NUT, M6	1							
36	1	129150-35170	FILTER,LO	1							1

Remarks
(1)Repair part.

N:Old ←Yes/No→ New. Q:Old ←No/Yes→ New, R:Old ←Yes/Yes→ New. S:Old ←No/No→ New. W:Add. Z:Discontinued. F:Interchangeable by set. K:Q'ty Change

Copyright (C) YANMAR CO., LTD. All RightsReserved.

Fig.10. COOLING WATER SYSTEM

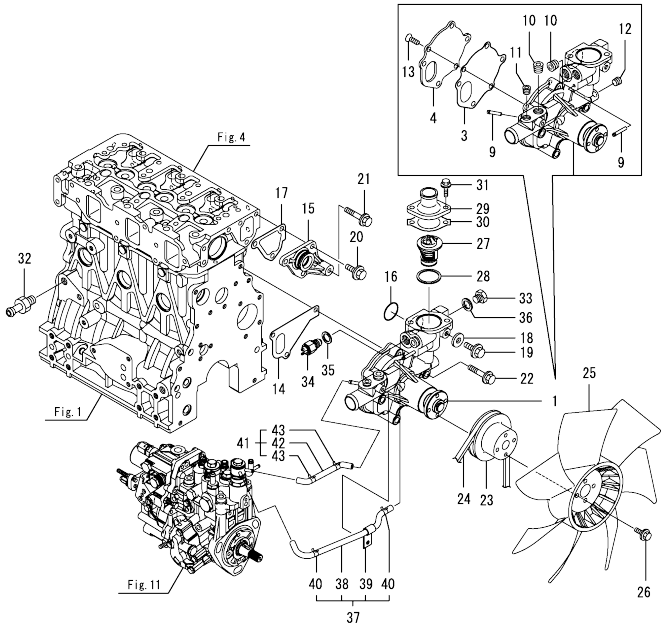

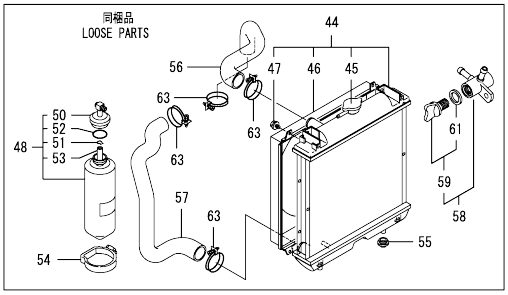

(A)=3TNV88-BPAMM (D)=
(B)= (E)=
(C)= (F)=

No.	Lev.	Parts No.	Description	Q'ty (A)	(B)	(C)	(D)	(E)	(F)	I	R
1	1	129004-42001	PUMP ASSY, WATER	1							
3	2	129100-42051	GASKET, WATER PUMP	1							
4	2	129100-42121	PLATE	1							
9	2	119802-49113	JOINT, PIPE	2							
10	2	129916-49740	PLUG, R03	2							
11	2	23875-020000	PLUG, R02	1							
12	2	23876-010000	PLUG, R01	1							
13	2	26577-060142	SCREW M 6X 14	3							
14	1	129486-42021	GASKET, WATER PUMP	1							
15	1	129004-42040	JOINT	1							
16	1	129486-42140	O-RING, G30	1							
17	1	124395-49840	GASKET	1							
18	1	23414-080000	GASKET, 8X1.0	1							
19	1	26106-080122	BOLT, M8X 12 PLATED	1							
20	1	26106-080162	BOLT, M8X 16 PLATED	3							
21	1	26106-080452	BOLT, M8X 45 PLATED	1							
22	1	26106-080602	BOLT, M8X 60 PLATED	3							
23	1	129155-42350	V-PULLEY	1							
24	1	25132-003700	V-BELT, A37	1							
25	1	119717-44740	FAN, COOLING D335X7	1							
26	1	26106-060122	BOLT, M6X 12 PLATED	4							
27	1	129155-49801	THERMOSTAT, 71	1							
28	1	129150-49811	GASKET, THERMOSTAT	1							
29	1	129350-49530	COVER, THERMOSTAT	1							
30	1	129795-49551	GASKET	1							
31	1	26106-080222	BOLT, M8X 22 PLATED	2							
32	1	121550-49111	JOINT, PT1/4	1							
33	1	121450-42450	PLUG, M16	1							
34	1	121250-44901	SWITCH, 110	1							
35	1	124465-44950	GASKET, 16	1							
36	1	124465-44950	GASKET, 16	1							
37	1	129004-49610	PIPE ASSY, WATER	1							
38	2	129004-49711	PIPE ASSY, WATER	1							
39	2	119802-49730	RETAINER, PIPE	1							
40	2	124722-59050	CLIP, HOSE 9	2							
41	1	129004-49620	PIPE ASSY, WATER	1							
42	2	129004-49721	PIPE ASSY, WATER	1							
43	2	124722-59050	CLIP, HOSE 9	2							
44	1	129004-44500	RADIATOR ASSY	1							
45	2	129107-44590	CAP, RADIATOR	1							
46	2	119802-44600	SHROUD	1							
47	2	26014-060122	BOLT, M6X 12	4							
48	1	171064-44510	TANK ASSY, SUB	1							
50	2	121450-44531	CAP	1							
51	2	124450-44560	RETAINER	1							
52	2	121470-44581	GASKET	1							
53	2	23065-070225	HOSE 7X 225	1							
54	1	124450-44550	BAND	1							
55	1	119255-44660	ABSORBER	2							
56	1	129004-49010	PIPE, WATER	1							
57	1	129004-49020	PIPE, WATER	1							

N:Old ←Yes/No→ New. Q:Old ←No/Yes→ New. R:Old ←Yes/Yes→ New. S:Old ←No/No→ New. W:Add. Z:Discontinued. F:Interchangeable by set. K:Q'ty Change

++ CONTINUE ++

Copyright (C) YANMAR CO., LTD. All RightsReserved.

Fig.10. COOLING WATER SYSTEM

(A)=3TNV88-BPAMM
(B)=
(C)=
(D)=
(E)=
(F)=

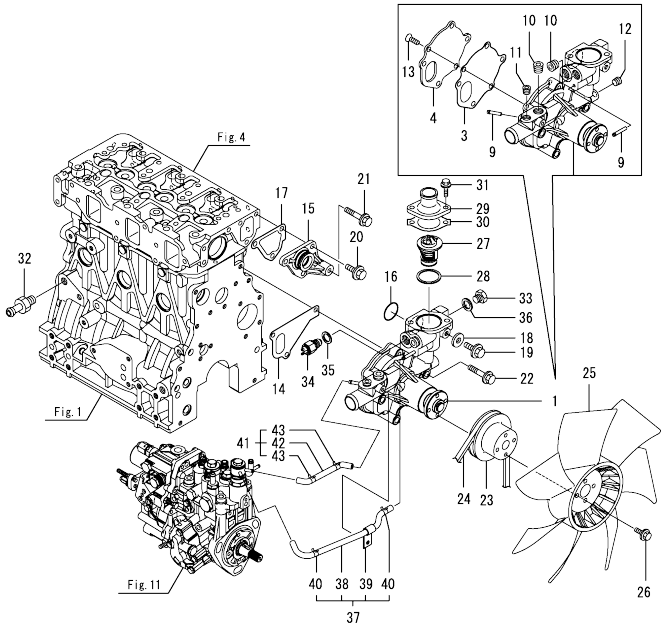

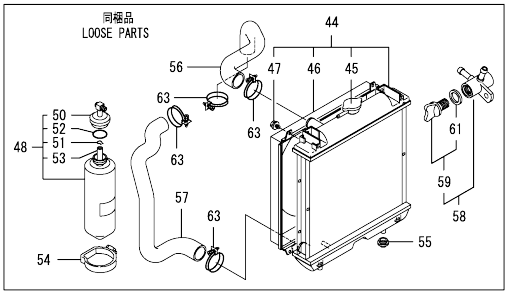

No.	Lev.	Parts No.	Description	Q'ty (A)	(B)	(C)	(D)	(E)	(F)	I	R
58	1	129150-49100	COCK ASSY, 3-WAY	1							
59	2	129150-49080	COCK, DRAIN	1							
61	3	119629-49080	GASKET	1							
63	1	23010-038000	CLAMP, 38	4							

N:Old ←Yes/No→ New. Q:Old ←No/Yes→ New. R:Old ←Yes/Yes→ New. S:Old ←No/No→ New. W:Add. Z:Discontinued. F:Interchangeable by set. K:Q'ty Change

Copyright (C) YANMAR CO., LTD. All RightsReserved.

Fig.11. FUEL INJECTION PUMP

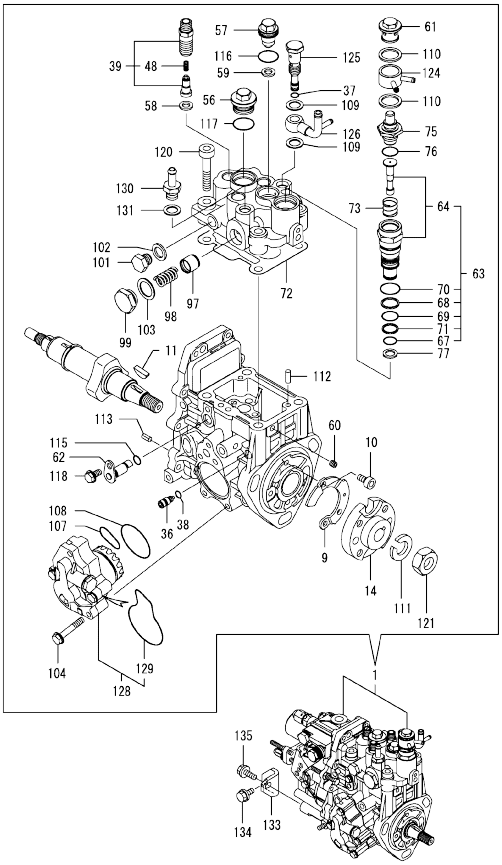

Remarks
(1)Governor(Fig.12)is incorporated in
this Fuel Injection Pump (Ref.1).

(A)=3TNV88-BPAMM (D)=
(B)= (E)=
(C)= (F)=

No.	Lev.	Parts No.	Description	Q'ty (A)	(B)	(C)	(D)	(E)	(F)	I	R
1	1	729285-51410	INJECTION PUMP ASSY	1							1
9	2	129008-51900	COVER, GEAR CASE	1							
10	2	129008-51920	BOLT, M6X10	2							
11	2	119802-51090	KEY, 4X16	1							
14	2	158552-51151	FLANGE	1							
36	2	158600-51270	STOPPER, TAPPET	1							
37	2	158563-51281	O-RING, 4D S6	1							
38	2	158563-51281	O-RING, 4D S6	1							
39	2	129008-51390	VALVE ASSY, DELIVERY	3							
48	3	158563-51330	SPRING, DELIVERY	3							
56	2	158601-51550	PLUG	1							
57	2	119802-51560	PLUG, BARREL	1							
58	2	158552-51571	GASKET	3							
59	2	158552-51571	GASKET	1							
60	2	158557-51570	PLUG	1							
61	2	158601-51570	PLUG	1							
62	2	158552-51580	LIFTER	1							
63	2	119802-51590	TIMER SET	1							
64	3	119802-51600	TIMER ASSY	1							
67	3	158553-51670	O-RING, 1011	1							
68	3	119802-51680	RING, BACK UP	1							
69	3	119802-51690	O-RING	1							
70	3	24356-190200	O-RING, 4D19020	1							
71	3	24372-000150	RING, BACK UP T2P15	1							
72	2	158552-51600	GASKET	1							
73	2	158553-51630	SPRING, TIMER	1							
75	2	158553-51650	ELEMENT	1							
76	2	158553-51660	O-RING, P14	1							
77	2	158553-51680	GASKET	1							
97	2	158601-51770	PISTON	1							
98	2	158552-51781	SPRING	1							
99	2	158601-51790	PLUG	1							
101	2	158553-51930	PLUG, M12	1							
102	2	22190-120002	WASHER, SEAL 12	1							
103	2	22190-180002	WASHER, SEAL 18	1							
104	2	158553-51770	BOLT	4							
107	2	158552-52311	O-RING	1							
108	2	158552-52400	O-RING, 4E S42	1							
109	2	22190-120002	WASHER, SEAL 12	2							
110	2	22190-180002	WASHER, SEAL 18	2							
111	2	22217-140000	WASHER, SPRING 14	1							
112	2	22312-050140	PIN, PARALLEL M5X14	2							
113	2	22351-050010	PIN, SPRING 5.0X10	2							
115	2	24311-000070	O-RING, 1AP7.0	1							
116	2	24356-190180	O-RING, 4D19018	1							
117	2	24356-190200	O-RING, 4D19020	1							
118	2	26106-060102	BOLT, M6X 10 PLATED	1							
120	2	26450-080452	BOLT, M8X 45	4							
121	2	26776-140002	NUT, LOCK M14	1							
124	2	158553-51551	JOINT	1							
125	2	158601-51650	JOINT, OVER FLOW	1							

N:Old ←Yes/No→ New. Q:Old ←No/Yes→ New. R:Old ←Yes/Yes→ New. S:Old ←No/No→ New. W:Add. Z:Discontinued. F:Interchangeable by set. K:Q'ty Change

++ CONTINUE ++

Copyright (C) YANMAR CO., LTD. All RightsReserved.

Fig.11. FUEL INJECTION PUMP

(A)=3TNV88-BPAMM
(B)=
(C)=
(D)=
(E)=
(F)=

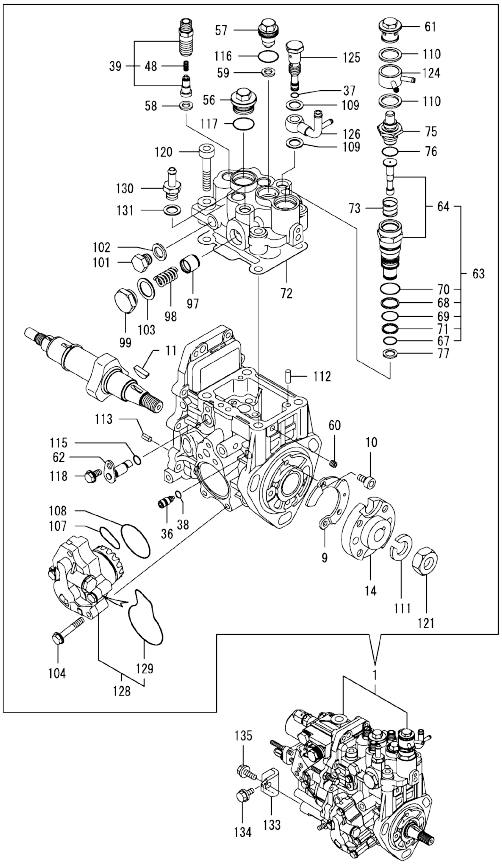

No.	Lev.	Parts No.	Description	Q'ty (A)	(B)	(C)	(D)	(E)	(F)	I	R
126	2	158552-51670	JOINT, OVER FLOW	1							
128	2	158552-52100	PUMP ASSY, FUEL FEED	1							
129	3	158552-52500	O-RING	1							
130	2	119934-59910	JOINT, PIPE	1							
131	2	22190-120002	WASHER, SEAL 12	1							
133	1	119802-51250	RETAINER, PUMP	1							
134	1	26106-080162	BOLT, M8X 16 PLATED	1							
135	1	26106-080202	BOLT, M8X 20 PLATED	1							

Remarks
(1)Governor(Fig.12)is incorporated in
this Fuel Injection Pump (Ref.1).

N:Old ←Yes/No→ New. Q:Old ←No/Yes→ New. R:Old ←Yes/Yes→ New. S:Old ←No/No→ New. W:Add. Z:Discontinued. F:Interchangeable by set. K:Q'ty Change

Copyright (C) YANMAR CO., LTD. All RightsReserved.

Fig.12. GOVERNOR

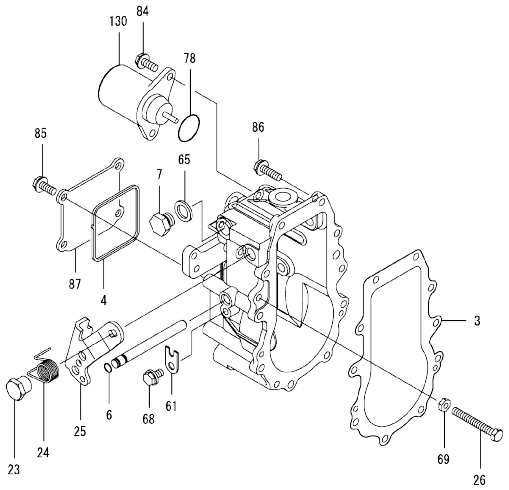

Remarks
*This figure(Governor)is incorporated
in the Fuel Injection Pump (Fig.11).

(A)=3TNV88-BPAMM (D)=
(B)= (E)=
(C)= (F)=

No.	Lev.	Parts No.	Description	Q'ty (A)	(B)	(C)	(D)	(E)	(F)	I	R
3	2	158553-61050	GASKET	1							
4	2	158553-61070	GASKET	1							
6	2	129155-51280	O-RING, S6	1							
7	2	158553-51930	PLUG, M12	1							
23	2	129255-61410	NUT, LOCK	1							
24	2	119807-61420	SPRING, RETURN	1							
25	2	158552-61441	LEVER, REGULATOR	1							
26	2	129155-61460	BOLT, IDLE	1							
61	2	119660-61901	RETAINER, SHAFT	1							
65	2	22190-120002	WASHER, SEAL 12	1							
68	2	26106-060102	BOLT, M6X 10 PLATED	1							
69	2	26756-060002	NUT, LOCK M6	1							
78	2	158552-61900	O-RING	1							
84	2	26106-060142	BOLT, M6X 14 PLATED	2							
85	2	26106-060142	BOLT, M6X 14 PLATED	4							
86	2	26106-060202	BOLT, M6X 20 PLATED	10							
87	2	129642-61060	COVER, GOVERNOR CASE	1							
130	2	119653-77950	SOLENOID, STOP	1							

N:Old $\frac{\text{Yes}}{\text{No}}$ New. Q:Old $\frac{\text{No}}{\text{Yes}}$ New. R:Old $\frac{\text{Yes}}{\text{Yes}}$ New. S:Old $\frac{\text{No}}{\text{No}}$ New. W:Add. Z:Discontinued. F:Interchangeable by set. K:Q'ty Change

Copyright (C) YANMAR CO., LTD. All RightsReserved.

Fig.13. FUEL INJECTION VALVE

(A)=3TNV88-BPAMM (D)=
(B)= (E)=
(C)= (F)=

No.	Lev.	Parts No.	Description	Q'ty (A)	(B)	(C)	(D)	(E)	(F)	I	R
1	1	729604-53300	VALVE ASSY,INJECTION	3							
2	2	114250-53080	NUT, NOZZLE D16.95	3							
8	2	114250-53120	SPRING, NOZZLE	3							
9	2	114250-53130	SEAT, SPRING	3							
10	2	114250-53140	PLATE	3							
11	2	114250-53210	PIN	6							
12	2	129604-53300	VALVE ASSY,INJECTION	3							
15	2	119803-53400	SHIM SET	3							
42	1	129150-59120	RETAINER, PIPE	2							
45	2	129150-59131	BOLT, M4X14	4							
47	1	129004-59811	PIPE ASSY, INJECTION	1							
51	1	129004-59821	PIPE ASSY, INJECTION	1							
55	1	129004-59831	PIPE ASSY, INJECTION	1							
60	1	119802-59550	PIPE ASSY, RETURN	1							
61	2	124722-59050	CLIP, HOSE 9	2							
62	2	119802-59560	PIPE, FUEL RETURN	1							
63	1	129486-59551	PIPE ASSY, RETURN	2							
64	2	124722-59050	CLIP, HOSE 9	4							
66	1	119593-59581	CAP	1							
67	1	124060-77680	CLIP, HOSE 10	1							

N:Old ←Yes/No→ New. Q:Old ←No/Yes→ New. R:Old ←Yes/Yes→ New. S:Old ←No/No→ New. W:Add. Z:Discontinued. F:Interchangeable by set. K:Q'ty Change

Copyright (C) YANMAR CO., LTD. All RightsReserved.

Fig.14. FUEL LINE

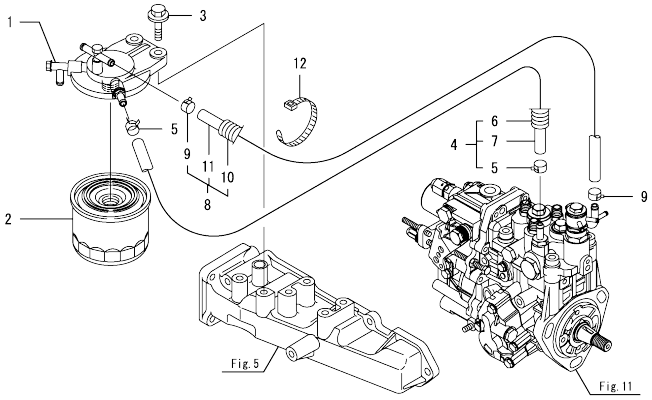

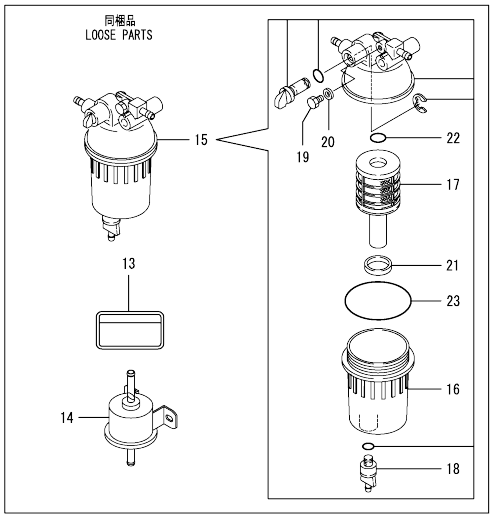

(A)=3TNV88-BPAMM (D)=
(B)= (E)=
(C)= (F)=

No.	Lev.	Parts No.	Description	Q'ty (A)	(B)	(C)	(D)	(E)	(F)	I	R
1	1	129004-55612	BRACKET, FILTER	1							
2	1	119802-55810	FILTER,FO	1							
3	1	26106-080302	BOLT, M8X 30 PLATED	2							
4	1	129044-59010	PIPE, D13/7.5X220	1							
5	2	124766-59050	CLIP, HOSE 12	2							
6	2	129044-59100	TUBE, CORRUGATED	1							
7	2	129044-59510	PIPE, FUEL 220	1							
8	1	129950-59311	PIPE, FUEL	1							
9	2	124766-59050	CLIP, HOSE 12	2							
10	2	129961-59110	TUBE, CORRUGATED	1							
11	2	105025-59580	PIPE, FUEL	1							
12	1	121750-59890	BAND, 140	1							
13	1	114110-07760	LABEL, FUEL OIL	1							
14	1	119225-52102	PUMP ASSY, FUEL FEED	1							
15	1	129242-55701	SEPARATOR ASSY	1							
16	2	129242-55720	CUP	1							
17	2	129242-55730	ELEMENT	1							
18	2	129242-55740	PLUG, DRAIN	1							
19	2	129242-55750	VALVE, AIR VENT	1							
20	2	129242-55760	GASKET	1							
21	2	129242-55770	FLOAT	1							
22	2	24311-000160	O-RING, 1AP16.0	1							
23	2	24321-000750	O-RING, 1AG75.0	1							

N:Old ◄Yes/No► New. Q:Old ◄No/Yes► New, R:Old ◄Yes/Yes► New, S:Old ◄No/No► New. W:Add. Z:Discontinued. F:Interchangeable by set. K:Q'ty Change

Copyright (C) YANMAR CO., LTD. All RightsReserved.

Fig.15. STARTING MOTOR

(A)=3TNV88-BPAMM
(B)=
(C)=
(D)=
(E)=
(F)=

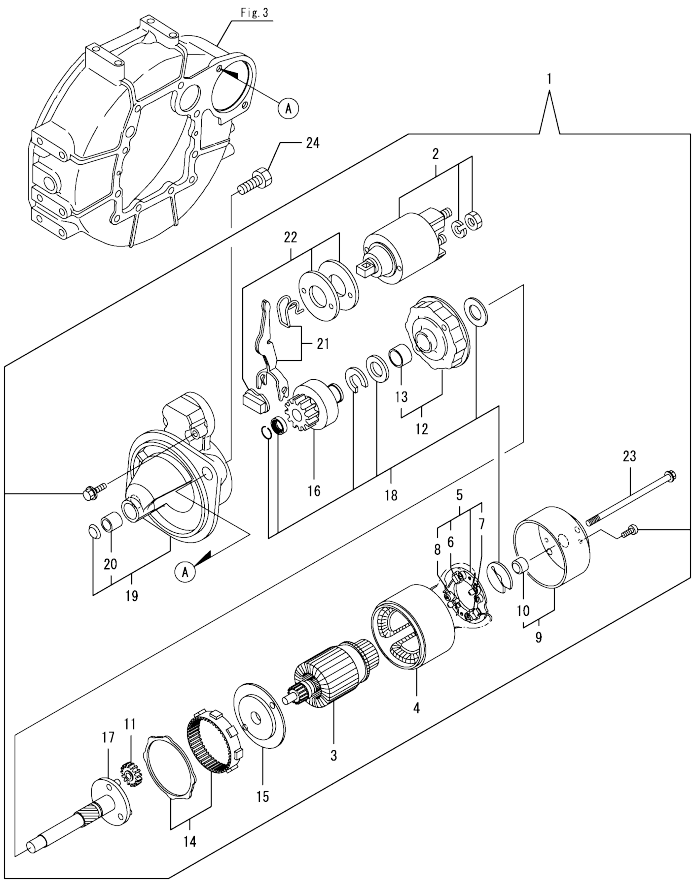

No.	Lev.	Parts No.	Description	Q'ty (A)	(B)	(C)	(D)	(E)	(F)	I	R
1	1	129242-77010	STARTER	1							
2	2	129698-77020	MAGNETIC SWITCH ASSY	1							
3	2	129242-77100	ARMATURE ASSY	1							
4	2	129242-77110	YOKE ASSY	1							
5	2	129242-77120	BRUSH HOLDER ASSY	1							
6	3	129242-77130	BRUSH(-)	2							
7	3	129242-77140	BRUSH(+) SET	1							
8	3	129242-77150	BRUSH SPRING	4							
9	2	129242-77160	REAR COVER ASSY	1							
10	3	129242-77170	REAR COVER METAL	1							
11	2	118400-77170	GEAR	3							
12	2	129242-77180	CENTER BRACKET(P)	1							
13	3	129698-77190	BRACKET	1							
14	2	129698-77200	GEAR, INTERNAL	1							
15	2	129242-77210	CENTER BRACKET(A)	1							
16	2	129698-77220	PINION ASSY	1							
17	2	129698-77230	SHAFT(PINION	1							
18	2	129698-77250	WASHER SET	1							
19	2	129242-77260	GEAR CASE ASSY	1							
20	3	X2114535200	METAL, STARTER	1							
21	2	129242-77270	SHIFT LEVER SET	1							
22	2	129242-77280	DUST COVER KIT	1							
23	2	124195-77770	THROUGH BOLT	2							
24	1	26116-120252	BOLT, M12X 25 PLATED	2							

N:Old ←Yes/No→ New. Q:Old ←No/Yes→ New. R:Old ←Yes/Yes→ New. S:Old ←No/No→ New. W:Add. Z:Discontinued. F:Interchangeable by set. K:Q'ty Change

Copyright (C) YANMAR CO., LTD. All RightsReserved.

Fig.16. GENERATOR

(A)=3TNV88-BPAMM
(B)=
(C)=
(D)=
(E)=
(F)=

No.	Lev.	Parts No.	Description	Q'ty (A)	(B)	(C)	(D)	(E)	(F)	I	R
1	1	119626-77210	ALTERNATOR, 12V-55A	1							
2	2	X9490561001	NUT	1							
3	2	129052-77380	ROTOR ASSY	1							
4	3	123501-79240	BEARING, BALL	1							
5	3	119620-79250	COVER, BEARING	1							
6	2	129052-77422	FRAME ASSY	1							
7	3	119620-79200	BALL BEARING	1							
8	3	119620-79210	PLATE, RETAINER	1							
9	3	119620-79220	SCREW	4							
10	3	119620-79230	STUD	2							
11	2	128401-77440	FRAME	1							
12	2	119626-77450	COVER, END, RR	1							
13	2	119620-77461	PULLEY	1							
14	2	119620-77471	NUT	1							
15	2	119620-77490	COLLAR	1							
16	2	119626-77710	REGULATOR ASSY	1							
17	2	129052-79260	HOLDER	1							
18	2	129052-79270	HOLDER, BRUSH	1							
19	2	119620-79290	SCREW	6							
20	2	119620-79300	SCREW	1							
21	2	119620-79310	BOLT	3							
22	2	119620-79320	SCREW	2							
23	2	119620-79330	BOLT	2							
24	2	119620-79340	BUSH, INSULATION	1							
25	2	119620-79350	NUT	2							
26	1	119740-77251	BOLT, M10X80	1							
27	1	26306-100002	NUT, M10	1							
28	1	119940-77270	SPACER, GENERATOR	1							
29	1	119940-77330	ADJUSTER	1							
30	1	129972-77341	BOLT, ADJUSTER L=50	1							
31	1	26106-080452	BOLT, M8X 45 PLATED	1							
32	1	119650-77910	RELAY ASSY, GLOW	2							
35	1	128300-77920	TIMER	1							
36	1	129211-77920	TIMER	1							

同梱品
LOOSE PARTS

Fig.2

Fig.10

N:Old ←Yes/No→ New. Q:Old ←No/Yes→ New. R:Old ←Yes/Yes→ New. S:Old ←No/No→ New. W:Add. Z:Discontinued. F:Interchangeable by set. K:Q'ty Change

Copyright (C) YANMAR CO., LTD. All RightsReserved.

Fig.17. GASKET SET

(A)=3TNV88-BPAMM
(B)=
(C)=
(D)=
(E)=
(F)=

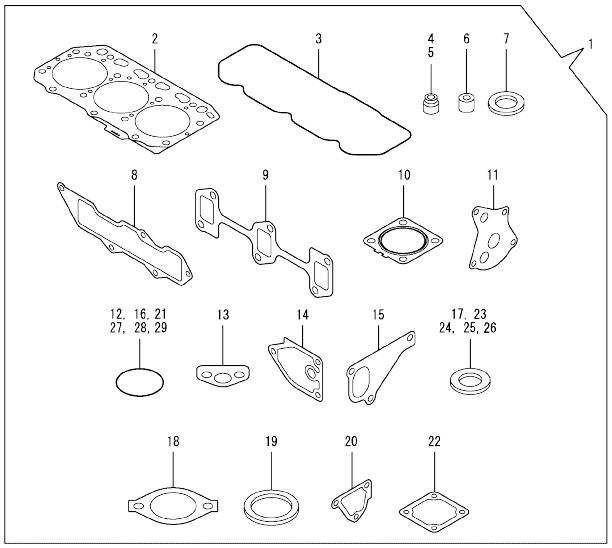

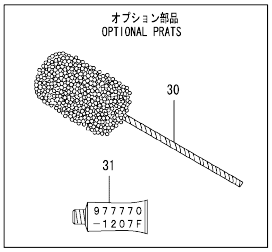

No.	Lev.	Parts No.	Description	Q'ty (A)	(B)	(C)	(D)	(E)	(F)	I	R
1	1	729005-92630	GASKET SET	1							1
2	2	129001-01340	GASKET, HEAD	1							
3	2	129004-11310	GASKET, BONNET	1							
4	2	121400-11340	SEAL, VALVE STEM	3							
5	2	124460-11340	SEAL, VALVE STEM	3							
6	2	119802-11870	PROTECTOR, NOZZLE	3							
7	2	119625-11880	SEAT, NOZZLE	3							
8	2	129001-12110	GASKET, MANIFOLD	1							
9	2	129150-13110	GASKET	1							
10	2	129004-13200	GASKET, SILENCER	1							
11	2	129150-32020	GASKET, PUMP	1							
12	2	119609-32040	O-RING, P16	2							
13	2	129150-35042	GASKET	1							
14	2	129150-35111	GASKET	1							
15	2	129486-42021	GASKET, WATER PUMP	1							
16	2	129486-42140	O-RING, G30	1							
17	2	124465-44950	GASKET, 16	2							
18	2	129795-49551	GASKET	1							
19	2	129150-49811	GASKET, THERMOSTAT	1							
20	2	124395-49840	GASKET	1							
21	2	121850-51960	O-RING	1							
22	2	129150-77511	GASKET	1							
23	2	22190-080002	WASHER, SEAL 6	2							
24	2	22190-100002	WASHER, SEAL 10	2							
25	2	22190-220002	WASHER, SEAL 22	1							
26	2	23414-080000	GASKET, 8X1.0	1							
27	2	24311-000120	O-RING, 1AP12.0	3							
28	2	24311-000320	O-RING, 1AP32.0	2							
29	2	24341-000240	O-RING, 1AS24.0	1							
30	1	129400-92430	HONE	1							1
31	1	977770-1207F	GASKET.LIQUID	1							1

Remarks
(1)Optional parts.

N:Old $\xleftarrow[\text{No}]{\text{Yes}}$ New. Q:Old $\xleftarrow[\text{Yes}]{\text{No}}$ New, R:Old $\xleftarrow[\text{Yes}]{\text{Yes}}$ New, S:Old $\xleftarrow[\text{No}]{\text{No}}$ New, W:Add, Z:Discontinued, F:Interchangeable by set, K:Q'ty Change

Copyright (C) YANMAR CO., LTD. All RightsReserved.

Parts No. Index

Parts No.	Fig. No.	Ref. No.
105025-59580	14	11
114110-07760	14	13
114250-39450	9	27
114250-53080	13	2
114250-53120	13	8
114250-53130	13	9
114250-53140	13	10
114250-53210	13	11
118400-77170	15	11
119225-52102	14	14
119255-44660	10	55
119593-59581	13	66
119609-32040	2	9
	17	12
119620-01750	3	3
119620-77461	16	13
119620-77471	16	14
119620-77490	16	15
119620-79200	16	7
119620-79210	16	8
119620-79220	16	9
119620-79230	16	10
119620-79250	16	5
119620-79290	16	19
119620-79300	16	20
119620-79310	16	21
119620-79320	16	22
119620-79330	16	23
119620-79340	16	24
119620-79350	16	25
119625-11880	4	28
	17	7
119626-77210	16	1
119626-77450	16	12
119626-77710	16	16
119629-49080	10	61
119640-01640	3	8
119650-77910	16	32
119653-77950	12	130
119660-61901	12	61
119717-44740	10	25
119740-77251	16	26
119802-01561	2	5
119802-03110	4	39
119802-03121	4	40
119802-03130	4	41
119802-03141	4	42
119802-11260	4	4
119802-11270	4	5
119802-11280	4	6

Parts No.	Fig. No.	Ref. No.
119802-11870	4	27
	17	6
119802-25071	7	16
119802-25101	7	10
119802-25901	7	15
119802-35100	9	21
119802-35110	9	22
119802-39450	9	29
119802-44600	10	46
119802-49113	10	9
119802-49730	10	39
119802-51090	11	11
119802-51250	11	133
119802-51560	11	57
119802-51590	11	63
119802-51600	11	64
119802-51680	11	68
119802-51690	11	69
119802-55810	14	2
119802-59550	13	60
119802-59560	13	62
119803-01520	2	4
119803-21200	8	4
119803-25050	7	9
119803-53400	13	15
119807-61420	12	24
119865-21600	8	14
119934-01800	2	3
119934-59910	11	130
119940-77270	16	28
119940-77330	16	29
120130-11860	4	54
120270-54410	4	30
121023-01551	2	19
121111-21501	8	11
121250-44901	10	34
121400-11340	4	23
	17	4
121450-42450	10	33
121450-44531	10	50
121470-44581	10	52
121520-34810	9	17
121550-23200	8	28
121550-49111	10	32
121750-59890	14	12
121850-21680	8	10
121850-51960	2	10
	17	21
121855-12060	5	10
123501-79240	16	4

Parts No.	Fig. No.	Ref. No.
123900-13610	6	3
123900-13630	6	4
124060-01050	1	4
124060-77680	13	67
124160-01751	2	6
	4	35
124160-01910	1	6
		7
124160-11360	4	47
124160-39140	9	28
124195-77770	15	23
124240-01871	2	7
124395-49840	10	17
	17	20
124450-44550	10	54
124450-44560	10	51
124460-11340	4	24
	17	5
124465-44950	10	35
		36
	17	17
124722-59050	10	40
		43
	13	61
		64
124766-59050	14	5
		9
128300-77920	16	35
128401-77440	16	11
129001-01250	1	5
129001-01340	1	28
	17	2
129001-02931	1	29
129001-12110	5	4
	17	8
129001-32001	9	1
129004-03010	4	37
129004-03080	5	1
129004-11241	4	1
129004-11251	4	2
129004-11310	4	44
	17	3
129004-11350	4	36
129004-11650	4	8
129004-11900	4	29
129004-12101	5	3
129004-13200	6	6
	17	10
129004-21650	8	8
129004-34802	9	16

Parts No.	Fig. No.	Ref. No.
129004-42001	10	1
129004-42040	10	15
129004-44500	10	44
129004-49010	10	56
129004-49020	10	57
129004-49610	10	37
129004-49620	10	41
129004-49711	10	38
129004-49721	10	42
129004-55612	14	1
129004-59811	13	47
129004-59821	13	51
129004-59831	13	55
129005-11100	4	19
129005-22080	8	15
129005-22500	8	17
129005-22900	8	34
129005-22950	8	36
129005-59830	9	30
129008-11700	4	13
129008-21000	8	1
129008-51390	11	39
129008-51900	11	9
129008-51920	11	10
129008-77800	4	52
129008-77820	4	53
129044-59010	14	4
129044-59100	14	6
129044-59510	14	7
129052-77380	16	3
129052-77422	16	6
129052-79260	16	17
129052-79270	16	18
129100-01580	3	1
		15
	8	2
129100-01640	3	16
129100-01730	3	6
129100-01760	3	7
129100-11112	4	20
129100-13110	6	1
129100-23910	8	31
129100-35140	9	23
129100-35301	9	19
129100-42051	10	3
129100-42121	10	4
129107-44590	10	45
129128-21590	8	12
129129-14580	7	3
129150-01200	1	27

Parts No. Index

Parts No.	Fig. No.	Ref. No.
129150-02020	1	9
129150-02450	7	4
129150-02871	1	32
129150-02931	1	24
129150-02941	1	35
129150-03070	4	38
129150-11230	4	9
129150-11280	4	7
129150-11370	4	12
129150-11750	4	11
129150-11810	4	55
129150-13110	6	2
	17	9
129150-14101	7	6
129150-14200	7	1
129150-14400	7	2
129150-23601	8	29
129150-23611	8	32
129150-25301	7	14
129150-32020	9	14
	17	11
129150-35042	9	18
	17	13
129150-35111	9	24
	17	14
129150-35170	9	36
129150-49080	10	59
129150-49100	10	58
129150-49811	10	28
	17	19
129150-59120	13	42
129150-59131	13	45
129150-77511	5	8
	17	22
129155-42350	10	23
129155-49801	10	27
129155-51280	12	6
129155-61460	12	26
129202-22300	8	23
129211-77920	16	36
129242-55701	14	15
129242-55720	14	16
129242-55730	14	17
129242-55740	14	18
129242-55750	14	19
129242-55760	14	20
129242-55770	14	21
129242-77010	15	1
129242-77100	15	3
129242-77110	15	4

Parts No.	Fig. No.	Ref. No.
129242-77120	15	5
129242-77130	15	6
129242-77140	15	7
129242-77150	15	8
129242-77160	15	9
129242-77170	15	10
129242-77180	15	12
129242-77210	15	15
129242-77260	15	19
129242-77270	15	21
129242-77280	15	22
129255-61410	12	23
129350-49530	10	29
129400-92430	17	30
129410-03990	5	2
129486-01670	3	19
129486-12581	5	7
129486-42021	10	14
	17	15
129486-42140	10	16
	17	16
129486-59551	13	63
129604-53300	13	12
129612-01600	3	2
129642-61060	12	87
129698-77020	15	2
129698-77190	15	13
129698-77200	15	14
129698-77220	15	16
129698-77230	15	17
129698-77250	15	18
129795-01780	3	18
129795-01950	2	8
129795-02412	1	12
129795-11120	4	21
129795-11180	4	22
129795-21661	8	9
129795-49551	10	30
	17	18
129900-07900	4	50
129916-49740	10	10
129950-59311	14	8
129961-59110	14	10
129972-77341	16	30
158552-51151	11	14
158552-51571	11	58
		59
158552-51580	11	62
158552-51600	11	72
158552-51670	11	126

Parts No.	Fig. No.	Ref. No.
158552-51781	11	98
158552-52100	11	128
158552-52311	11	107
158552-52400	11	108
158552-52500	11	129
158552-61441	12	25
158552-61900	12	78
158553-51551	11	124
158553-51630	11	73
158553-51650	11	75
158553-51660	11	76
158553-51670	11	67
158553-51680	11	77
158553-51770	11	104
158553-51930	11	101
	12	7
158553-61050	12	3
158553-61070	12	4
158557-51570	11	60
158563-51281	11	37
		38
158563-51330	11	48
158600-51270	11	36
158601-51550	11	56
158601-51570	11	61
158601-51650	11	125
158601-51770	11	97
158601-51790	11	99
171051-01921	1	8
171064-44510	10	48
22190-080002	2	11
	9	31
		33
	17	23
22190-100002	9	34
	17	24
22190-120002	11	102
		109
		131
	12	65
22190-180002	11	103
		110
22190-220002	3	10
	17	25
22217-140000	11	111
22252-000260	8	24
22312-050140	11	112
22351-030010	8	7
22351-050010	11	113
22351-060012	4	31

Parts No.	Fig. No.	Ref. No.
22512-070140	7	7
	8	5
22857-500100	4	45
		46
23010-038000	10	63
23065-070225	10	53
23414-080000	10	18
	17	26
23857-030000	9	32
23875-020000	10	11
23876-010000	10	12
24311-000070	11	115
24311-000120	4	48
	17	27
24311-000160	14	22
24311-000320	2	12
	4	49
	17	28
24321-000750	14	23
24341-000240	2	20
	17	29
24356-190180	11	116
24356-190200	11	70
		117
24372-000150	11	71
25132-003700	10	24
26014-060122	10	47
26106-060102	11	118
	12	68
26106-060122	10	26
26106-060142	12	84
		85
26106-060162	2	21
26106-060202	12	86
26106-080122	10	19
26106-080142	7	8
26106-080162	2	13
		14
	3	11
	4	51
	10	20
	11	134
26106-080202	5	5
		9
	9	26
	11	135
26106-080222	10	31
26106-080252	3	12
	4	32
26106-080302	2	15

Parts No. Index

Parts No.	Fig. No.	Ref. No.
26106-080302	14	3
26106-080352	3	20
	4	33
	9	20
26106-080402	7	13
26106-080452	3	13
	10	21
	16	31
26106-080502	3	14
	4	34
26106-080552	2	16
26106-080602	10	22
26106-080802	5	6
26106-080852	2	17
26116-120252	15	24
26206-100252	3	4
26206-100302	3	5
26306-080002	2	18
	6	5
26306-100002	16	27
26366-060002	9	35
26450-060252	9	15
26450-080452	11	120
26577-060142	10	13
26756-060002	12	69
26776-140002	11	121
27241-120000	1	13
27241-300000	1	14
27241-400000	4	18
27310-080001	4	25
729005-01560	1	1
729005-92630	17	1
729285-51410	11	1
729402-23100	8	25
729604-53300	13	1
729630-01500	2	1
977770-1207F	17	31
X2114535200	15	20
X9490561001	16	2

Parts No.	Fig. No.	Ref. No.

Parts No.	Fig. No.	Ref. No.

Parts No.	Fig. No.	Ref. No.