YANMAR

PARTS CATALOG

0CD11-M14800EN

Last update Apr., 2013

PREFACE

1. This parts catalog is the 1st edition of 3TNV88-BDHK for HOKUETSU INDUSTRIES CO.,LTD.

Pub.No. : 0CD11-G14800
Published : May, 2011

2. Model name

Engine model	Vehicle	Vehicle made by
3TNV88-BDHK	ENGINE COMPRESSOR	HOKUETSU INDUSTRIES CO.,LTD.

Directions for the Parts Catalog.

1.The parts stipulated in this Parts Catalog are not necessarily standard equipped parts.
2.Parts may change without prior notice.
3.The following is an example of the Parts Catalog format.

0CF10-G21601 29. FUEL INJECTION PUMP(W/BOOST)

(A)=4JH-DT
(B)=4JH-DTZ
(C)=4JH-DTZP
(D)=4JH-DTZA
(E)=4JH-DTZY
(F)=

① REF.	② LEV.	PARTS NO.	DESCRIPTION	Q'TY (A)	(B)	(C)	(D)	(E)	(F)	③ I	⑤ R
1	1	729595-51390	FUEL INJECTION PUMP	1	1	1	1	1			1
1-1	1	729595-51391	FUEL INJECTION PUMP	1	1	1	1	1		N	1
	(A=E00185)	(B=E00200)									
3	2	26022-060162	SCREW M 6X 16	9	9	9	9	9			
3-1 ④	2	26022-060162	SCREW M 6X 16	4	4	4	4	4		K	
	(A=E00156)	(B=E00156)	(C=E00156) (D=E00156)	(E=E00156)							
4	2	129470-51040	CAMSHAFT	1	1	1	1	1			
5	2	122710-51050	BEARING, ROLLER	2	2	2	2	2			
6	2	129470-51060	RETAINER	1	1	1	1	1			

Remarks
(1) BOOST COMPEMSATOR TYPE. OPTIONAL
PART, TO E00155,(4JH-DT, 4JH-DTZ

① Ref. No.

The Ref. No. listed may not be in accordance with the illustration Ref. No.

(Ex.) Illustration No. 1 List Ref No. 1 (Before change) → 1- 1 (After change)

For interchangeable symbols N, R and K, illustrations for new parts may be abbreviated.

② Lev. (Level)

Level indication
The numbers below indicate the level of relativity towards the main part.
1 ----- Main parts (Assembly parts)
2 ----- Sub component included in " 1 ".
3 ----- Sub component included in " 2 ".
Note) Parts that are not for sale are partially illustrated but not listed.

③ Interchangeability Mark

When a part change takes place, one of the following interchangeability symbols is indicated beside the part.

Symbol	Interchangeability	Contents note
N	Old ← Yes / No → New	New Part is interchangeable for Old Part but Old Part is not interchangeable for New Part.
Q	Old ← No / Yes → New	New Part is not interchangeable for Old Part but Old Part is interchangeable for New Part.
R	Old ← Yes / Yes → New	New/ Old Parts are both interchangeable.
S	Old ← No / No → New	New/ Old Parts are both not interchangeable.
W		Part newly added.
Z		Part discontinued.
F		Not interchangeable by a single part but interchangeable together with related parts.
K		Changes only for used parts quantities.

④ Effective Machine No.

When a part changes, the effective Machine No. will be indicated in the (A)-(F) column.

Product Symbol	Product No.	Product Symbol	Product No.
C	Clutch No. Compressor No.	F	Machine No. (Agricultural Equip.)
D	Drive No.	M	Machine No.
E	Engine No.		

Note 1) A date may follow the symbol. (Ex.) 1996.01
Note 2) " XXXXX " and " ZZZZZ " are for parts that could not be predicted or for engine models that could not be identified.
Note 3) (A=E00185) is the E (Engine Serial Number) for the column (A) model (in this case 4JH-DT) after the parts design change.

⑤ Remarks Mark

Figures or alphabets (symbols) are entered in the remarks column.
The comments (remarks) on parts that are indicated at the bottom of the illustration are the same symbols as those stated above.

Contents

0CD11-M14800

Fig. No.	Fig. Name	Fig. No.	Fig. Name
3TNV88-BDHK			
1.	CYLINDER BLOCK		
2.	GEAR HOUSING		
3.	MOUNTING FLANGE & OIL SUMP		
4.	CYLINDER HEAD & BONNET		
5.	SUCTION MANIFOLD		
6.	EXHAUST MANIFOLD		
7.	CAMSHAFT & DRIVING GEAR		
8.	CRANKSHAFT & PISTON		
9.	LUB. OIL SYSTEM		
10.	COOLING WATER SYSTEM		
11.	FUEL INJECTION PUMP		
12.	GOVERNOR		
13.	FUEL INJECTION VALVE		
14.	FUEL LINE		
15.	STARTING MOTOR		
16.	GENERATOR		
17.	GASKET SET		

Fig.1. CYLINDER BLOCK

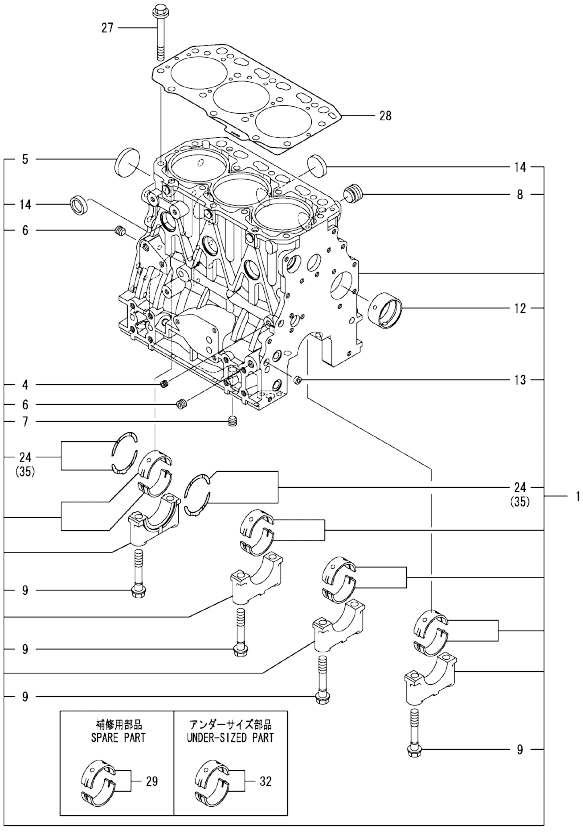

Remarks
(1)Spare part.
(2)Under-sized(U.S.=0.25)part.
(3)Over-sized(O.S.=0.25)part.

(A)=3TNV88-BDHK (D)=
(B)= (E)=
(C)= (F)=

No.	Lev.	Parts No.	Description	Q'ty (A)	(B)	(C)	(D)	(E)	(F)	I	R
1	1	729005-01560	BLOCK ASSY, CYLINDER	1							
4	2	124060-01050	PLUG, PT1/8	1							
5	2	129001-01250	PLUG, 50	1							
6	2	124160-01910	PLUG, PT1/4	2							
7	2	124160-01910	PLUG, PT1/4	1							
8	2	171051-01921	PLUG, NPTF1	1							
9	2	129150-02020	BOLT, METAL CAP	8							
12	2	129795-02412	BUSH, CAMSHAFT	1							
13	2	27241-120000	PLUG, 12	2							
14	2	27241-300000	PLUG 30	6							
24	2	129150-02931	BEARING, THRUST	2							
27	1	129150-01200	BOLT, HEAD	14							
28	1	129001-01340	GASKET, HEAD	1							
29	1	129001-02931	BEARING, MAIN	4							1
32	1	129150-02871	BEARING, 0.25 US	4							2
35	1	129150-02941	BEARING, THRUST 0.25	1							3

N:Old ←Yes/No→ New. Q:Old ←No/Yes→ New. R:Old ←Yes/Yes→ New. S:Old ←No/No→ New. W:Add. Z:Discontinued. F:Interchangeable by set. K:Q'ty Change

Copyright (C) YANMAR GLOBAL CS CO., LTD. All RightsReserved.

Fig.2. GEAR HOUSING

(A)=3TNV88-BDHK (D)=
(B)= (E)=
(C)= (F)=

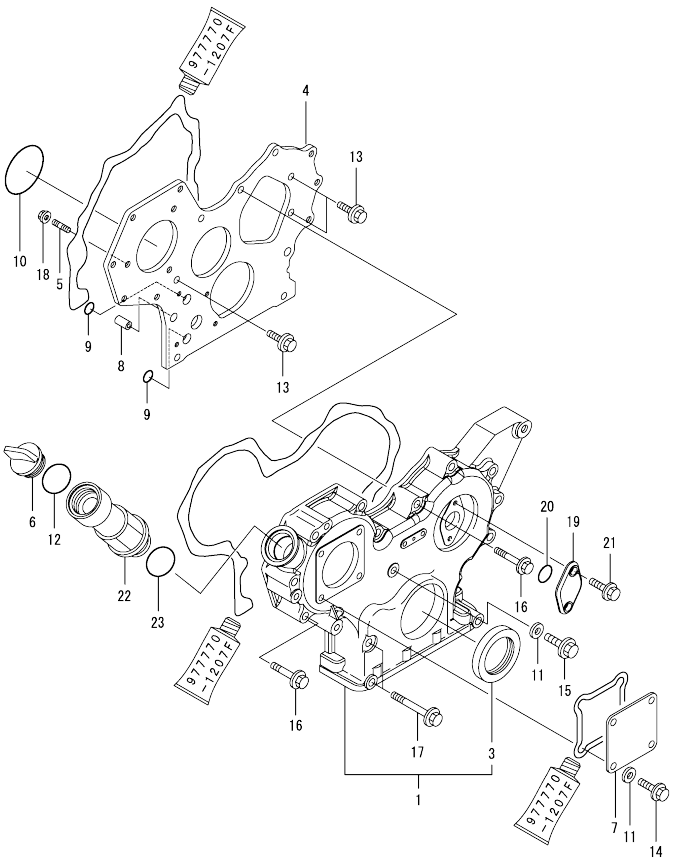

No.	Lev.	Parts No.	Description	Q'ty (A)	(B)	(C)	(D)	(E)	(F)	I	R
1	1	719803-01500	CASE ASSY, GEAR	1							
3	2	119934-01800	SEAL, OIL	1							
4	1	119803-01520	FLANGE, GEAR CASE	1							
5	1	119802-01561	STUD, M8X25	3							
6	1	124160-01751	COVER, FILLER	1							
7	1	124240-01871	COVER	1							
8	1	129795-01950	PIPE, KNOCK L=18	2							
9	1	119609-32040	O-RING, P16	2							
10	1	121850-51960	O-RING	1							
11	1	22190-080002	WASHER, SEAL 6	5							
12	1	24311-000320	O-RING, 1AP32.0	1							
13	1	26106-080162	BOLT, M8X 16 PLATED	3							
14	1	26106-080162	BOLT, M8X 16 PLATED	4							
15	1	26106-080302	BOLT, M8X 30 PLATED	1							
16	1	26106-080552	BOLT, M8X 55 PLATED	12							
17	1	26106-080852	BOLT, M8X 85 PLATED	3							
18	1	26306-080002	NUT, M8	3							
19	1	121023-01551	COVER	1							
20	1	24341-000240	O-RING, 1AS24.0	1							
21	1	26106-060162	BOLT, M6X 16 PLATED	2							
22	1	171031-11741	PIPE	1							
23	1	24311-000320	O-RING, 1AP32.0	1							

N:Old ◄Yes/No► New. Q:Old ◄No/Yes► New. R:Old ◄Yes/Yes► New. S:Old ◄No/No► New. W:Add. Z:Discontinued. F:Interchangeable by set. K:Q'ty Change

Copyright (C) YANMAR GLOBAL CS CO., LTD. All RightsReserved.

Fig.3. MOUNTING FLANGE & OIL SUMP

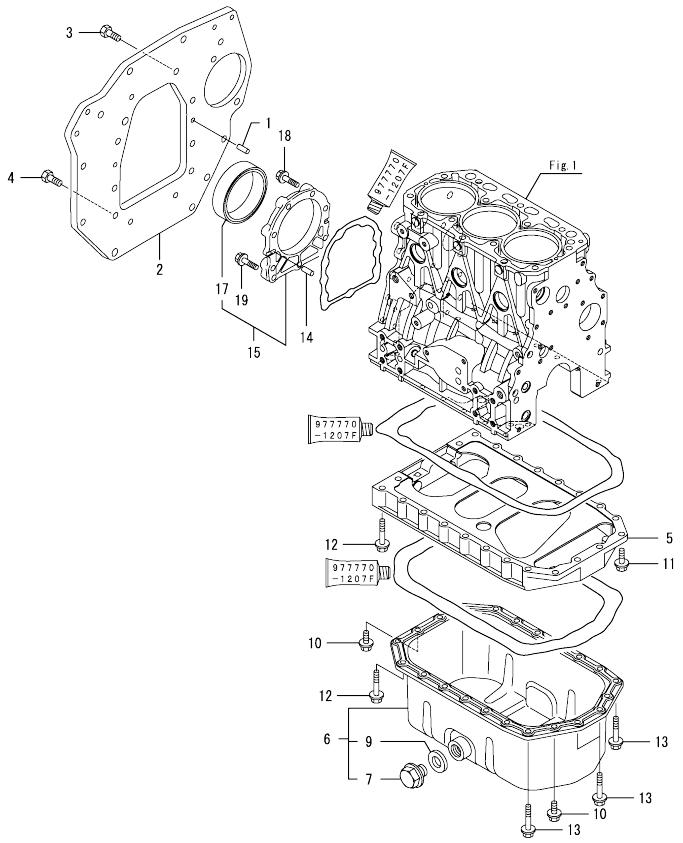

(A)=3TNV88-BDHK
(B)=
(C)=
(D)=
(E)=
(F)=

No.	Lev.	Parts No.	Description	Q'ty (A)	(B)	(C)	(D)	(E)	(F)	I	R
1	1	129100-01580	PIN, M8X16	2							
2	1	129129-01600	FLANGE, MOUNTING	1							
3	1	26206-100202	BOLT, M10X 20 PLATED	6							
4	1	26206-100252	BOLT, M10X 25 PLATED	2							
5	1	129100-01730	SPACER, OIL SUMP	1							
6	1	129100-01760	SUMP ASSY, OIL	1							
7	2	119640-01640	PLUG, DRAIN M22	1							
9	2	22190-220002	WASHER, SEAL 22	1							
10	1	26106-080162	BOLT, M8X 16 PLATED	4							
11	1	26106-080252	BOLT, M8X 25 PLATED	2							
12	1	26106-080452	BOLT, M8X 45 PLATED	16							
13	1	26106-080502	BOLT, M8X 50 PLATED	4							
14	1	129100-01580	PIN, M8X16	2							
15	1	129648-01600	CASE ASSY, OIL SEAL	1							
17	2	129648-01780	SEAL, OIL	1							
18	1	129486-01670	BOLT, M8X30	6							
19	1	26106-080352	BOLT, M8X 35 PLATED	3							

N:Old ←Yes/No→ New. Q:Old ←No/Yes→ New. R:Old ←Yes/Yes→ New. S:Old ←No/No→ New. W:Add. Z:Discontinued. F:Interchangeable by set. K:Q'ty Change

Copyright (C) YANMAR GLOBAL CS CO., LTD. All RightsReserved.

Fig.4. CYLINDER HEAD & BONNET

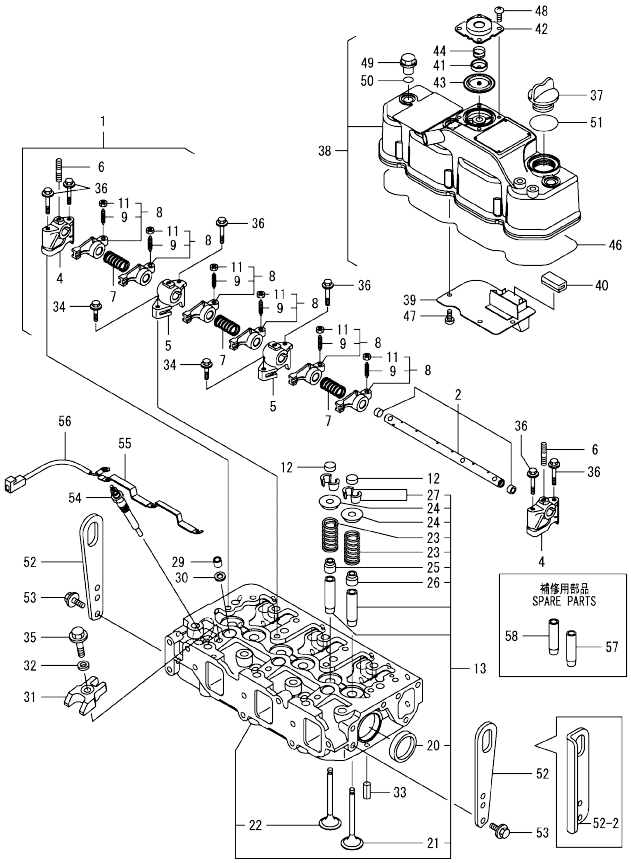

(A)=3TNV88-BDHK (D)=
(B)= (E)=
(C)= (F)=

No.	Lev.	Parts No.	Description	Q'ty (A)	(B)	(C)	(D)	(E)	(F)	I	R
1	1	129004-11241	SHAFT ASSY, ROCKER	1							
2	2	129004-11251	SHAFT, ROCKER ARM	1							
4	2	119802-11260	SUPPORT, ROCKER ARM	2							
5	2	119802-11270	SUPPORT, ROCKER ARM	2							
6	2	119802-11280	BOLT, STUD	3							
7	2	129150-11280	SPRING, ROCKER	3							
8	2	129004-11650	ARM ASSY, ROCKER	6							
9	3	129150-11230	SCREW, VALVE ADJUST	6							
11	3	129150-11750	NUT, M8	6							
12	1	129150-11370	CAP, VALVE	6							
13	1	129238-11710	HEAD ASSY, CYLINDER	1							
20	2	27241-400000	PLUG, 40	2							
21	2	129005-11100	VALVE, SUCTION	3							
22	2	129100-11112	VALVE, EXHAUST	3							
23	2	129795-11120	SPRING, VALVE	6							
24	2	129795-11180	RETAINER, SPRING	6							
25	2	121400-11340	SEAL, VALVE STEM	3							
26	2	124460-11340	SEAL, VALVE STEM	3							
27	2	27310-080001	COTTER, 8	6							
29	1	119802-11870	PROTECTOR, NOZZLE	3							
30	1	119625-11880	SEAT, NOZZLE	3							
31	1	129004-11900	RETAINER, NOZZLE	3							
32	1	120270-54410	WASHER, INJECTOR	3							
33	1	22351-060012	PIN, SPRING 6.0X12	2							
34	1	26106-080252	BOLT, M8X 25 PLATED	2							
35	1	26106-080352	BOLT, M8X 35 PLATED	3							
36	1	26106-080502	BOLT, M8X 50 PLATED	6							
37	1	124160-01751	CAP, FILLER	1							
38	1	129004-11350	BONNET ASSY, HEAD	1							
39	2	129004-03010	PLATE, BAFFLE	1							
40	2	129150-03070	BAFFLE, BREATHER	1							
41	2	119802-03110	PLATE, DIAPHRAGM	1							
42	2	119802-03121	COVER, DIAPHRAGM	1							
43	2	119802-03130	DIAPHRAGM	1							
44	2	119802-03141	SPRING, DIAPHRAGM	1							
46	2	129004-11310	GASKET, BONNET	1							
47	2	22857-500100	SCREW, 5X10	4							
48	2	22857-500100	SCREW, 5X10	4							
49	1	124160-11360	KNOB	3							
50	1	24311-000120	O-RING, 1AP12.0	3							
51	1	24311-000320	O-RING, 1AP32.0	1							
52	1	129900-07900	LIFTER, ENGINE	2							
52-1	1	129900-07900	LIFTER, ENGINE	1						K	
	(A=E164690)										
52-2	1	129688-07900	LIFTER, ENGINE	1						N	
	(A=E164690)										
53	1	26106-080162	BOLT, M8X 16 PLATED	4							
54	1	129008-77800	PLUG, GLOW	3							
55	1	129008-77820	CONNECTOR, GLOW PLUG	1							
56	1	129630-77800	HARNESS, WIRE	1							
57	1	120130-11860	GUIDE, VALVE	3							1

Remarks
(1)Spare part.

N:Old ←Yes/No→ New. Q:Old ←No/Yes→ New. R:Old ←Yes/Yes→ New. S:Old ←No/No→ New. W:Add. Z:Discontinued. F:Interchangeable by set. K:Q'ty Change

++ CONTINUE ++

Copyright (C) YANMAR GLOBAL CS CO., LTD. All RightsReserved.

Fig.4. CYLINDER HEAD & BONNET

(A)=3TNV88-BDHK
(B)=
(C)=
(D)=
(E)=
(F)=

No.	Lev.	Parts No.	Description	Q'ty (A)	(B)	(C)	(D)	(E)	(F)	I	R
58	1	129150-11810	GUIDE, VALVE	3							1

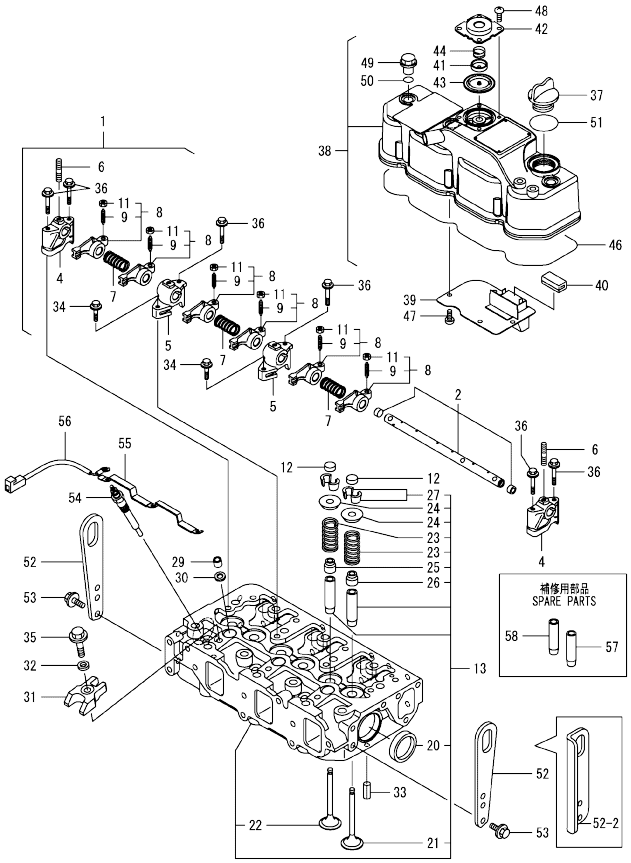

Remarks
(1)Spare part.

N:Old ←Yes/No→ New. Q:Old ←No/Yes→ New. R:Old ←Yes/Yes→ New. S:Old ←No/No→ New. W:Add. Z:Discontinued. F:Interchangeable by set. K:Q'ty Change

Copyright (C) YANMAR GLOBAL CS CO., LTD. All RightsReserved.

Fig.5. SUCTION MANIFOLD

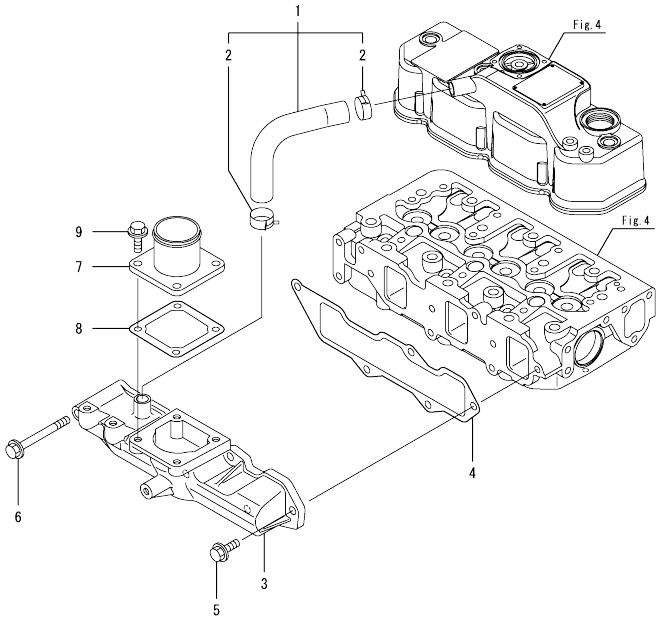

(A)=3TNV88-BDHK (D)=
(B)= (E)=
(C)= (F)=

No.	Lev.	Parts No.	Description	Q'ty (A)	(B)	(C)	(D)	(E)	(F)	I	R
1	1	129005-03080	PIPE , BREATHER	1							
2	2	129410-03990	CLAMP 22	2							
3	1	129005-12101	MANIFOLD, AIR INTAKE	1							
4	1	129001-12110	GASKET, MANIFOLD	1							
5	1	26106-080202	BOLT, M8X 20 PLATED	4							
6	1	26106-080802	BOLT, M8X 80 PLATED	1							
7	1	129486-12581	JOINT, MANIFOLD	1							
8	1	129150-77511	GASKET	1							
9	1	26106-080202	BOLT, M8X 20 PLATED	4							

N:Old ←Yes/No→ New. Q:Old ←No/Yes→ New. R:Old ←Yes/Yes→ New. S:Old ←No/No→ New. W:Add. Z:Discontinued. F:Interchangeable by set. K:Q'ty Change

Copyright (C) YANMAR GLOBAL CS CO., LTD. All RightsReserved.

Fig.6. EXHAUST MANIFOLD

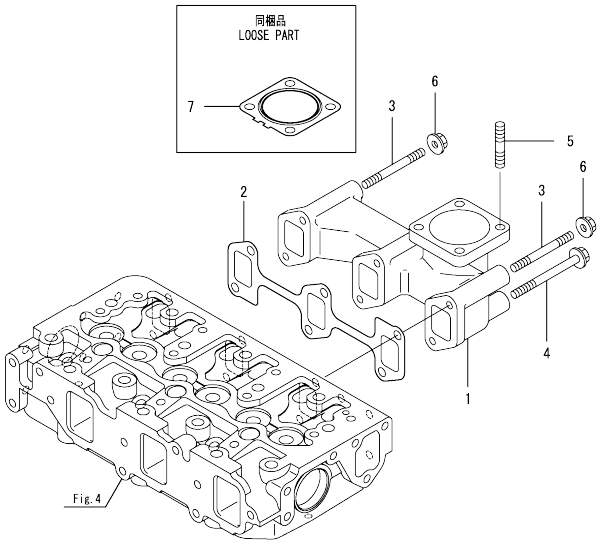

(A)=3TNV88-BDHK
(B)=
(C)=
(D)=
(E)=
(F)=

No.	Lev.	Parts No.	Description	Q'ty (A)	(B)	(C)	(D)	(E)	(F)	I	R
1	1	171350-13100	MANIFOLD, EXHAUST	1							
2	1	129150-13110	GASKET	1							
3	1	123900-13610	STUD, M8X80	2							
4	1	123900-13630	BOLT, M8X80	4							
5	1	119131-18320	STUD, M8X22	4							
6	1	26306-080002	NUT, M8	2							
7	1	129004-13200	GASKET, SILENCER	1							

N:Old ←Yes/No→ New. Q:Old ←No/Yes→ New. R:Old ←Yes/Yes→ New. S:Old ←No/No→ New. W:Add. Z:Discontinued. F:Interchangeable by set. K:Q'ty Change

Copyright (C) YANMAR GLOBAL CS CO., LTD. All RightsReserved.

Fig.7. CAMSHAFT & DRIVING GEAR

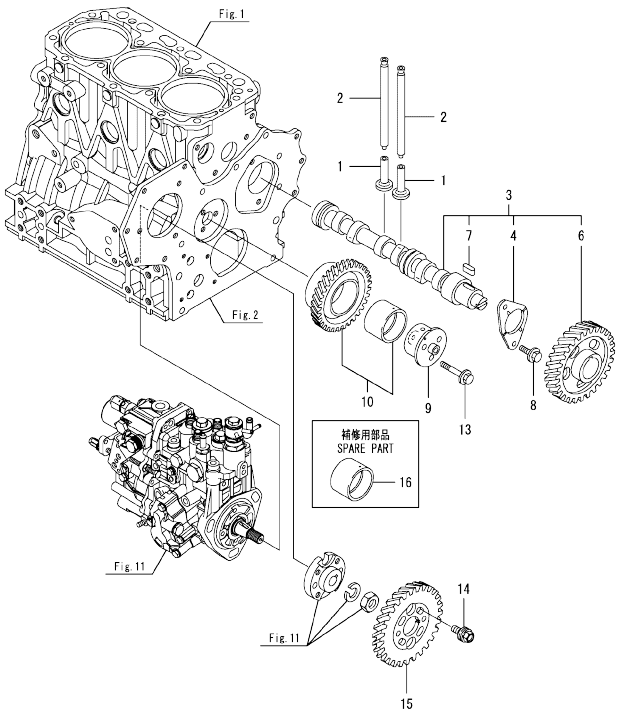

(A)=3TNV88-BDHK (D)=
(B)= (E)=
(C)= (F)=

No.	Lev.	Parts No.	Description	Q'ty (A)	(B)	(C)	(D)	(E)	(F)	I	R
1	1	129150-14200	TAPPET	6							
2	1	129150-14400	ROD, PUSH L=178	6							
3	1	129129-14580	CAMSHAFT ASSY	1							
4	2	129150-02450	BEARING, THRUST	1							
6	2	129150-14101	GEAR, CAMSHAFT	1							
7	2	22512-070140	KEY, 7X 14	1							
8	1	26106-080142	BOLT, M8X 14 PLATED	2							
9	1	119803-25050	SHAFT, IDLE	1							
10	1	119802-25101	GEAR ASSY, IDLE	1							
13	1	26106-080402	BOLT, M8X 40 PLATED	3							
14	1	129150-25301	BOLT	4							
15	1	119802-25901	GEAR, PUMP	1							
16	1	119802-25071	BUSH, IDLE GEAR	1							1

Remarks
(1)Spare part.

N:Old ←Yes/No→ New. Q:Old ←No/Yes→ New. R:Old ←Yes/Yes→ New. S:Old ←No/No→ New. W:Add. Z:Discontinued. F:Interchangeable by set. K:Q'ty Change

Copyright (C) YANMAR GLOBAL CS CO., LTD. All RightsReserved.

Fig.8. CRANKSHAFT & PISTON

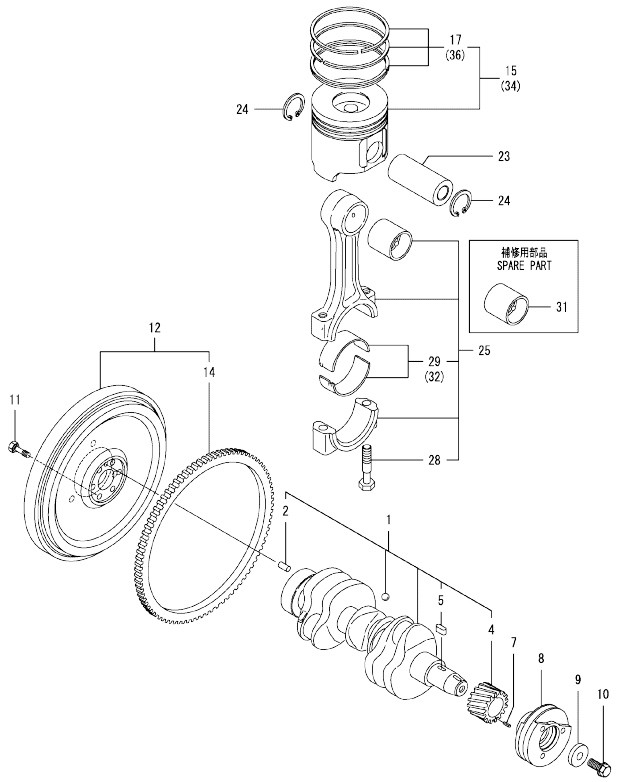

Remarks
(1)Spare part.
(2)Under-sized(U.S.=0.25)part.
(3)Over-sized(O.S.=0.25)part.

(A)=3TNV88-BDHK (D)=
(B)= (E)=
(C)= (F)=

No.	Lev.	Parts No.	Description	Q'ty (A)	(B)	(C)	(D)	(E)	(F)	I	R
1	1	129008-21000	CRANKSHAFT ASSY	1							
2	2	129100-01580	PIN, M8X16	1							
4	2	119803-21200	GEAR, CRANKSHAFT	1							
5	2	22512-070140	KEY, 7X 14	1							
7	1	22351-030010	PIN, SPRING 3.0X10	1							
8	1	129004-21650	V-PULLEY, 110	1							
9	1	129795-21661	WASHER	1							
10	1	121850-21680	BOLT	1							
11	1	121111-21501	BOLT, FLYWHEEL	6							
12	1	129128-21590	FLYWHEEL ASSY	1							
14	2	119865-21600	GEAR, RING	1							
15	1	129005-22080	PISTON ASSY	3							
17	2	129005-22500	RING SET, PISTON	3							
23	1	129202-22300	PIN, PISTON D26 L70	3							
24	1	22252-000260	RING, 26	6							
25	1	729402-23100	ROD ASSY, CONNECTING	3							
28	2	121550-23200	BOLT, CONNECTING ROD	6							
29	2	129150-23601	BEARING, CRANK PIN	3							
31	1	129100-23910	BEARING, PISTON PIN	3							1
32	1	129150-23611	BEARING, 0.25 US	3							2
34	1	129005-22900	PISTON ASSY, 0.25 OS	3							3
36	2	129005-22950	RING SET, 0.25 OS	3							3

N:Old ←Yes/No→ New. Q:Old ←No/Yes→ New. R:Old ←Yes/Yes→ New. S:Old ←No/No→ New. W:Add. Z:Discontinued. F:Interchangeable by set. K:Q'ty Change

Copyright (C) YANMAR GLOBAL CS CO., LTD. All RightsReserved.

Fig.9. LUB. OIL SYSTEM

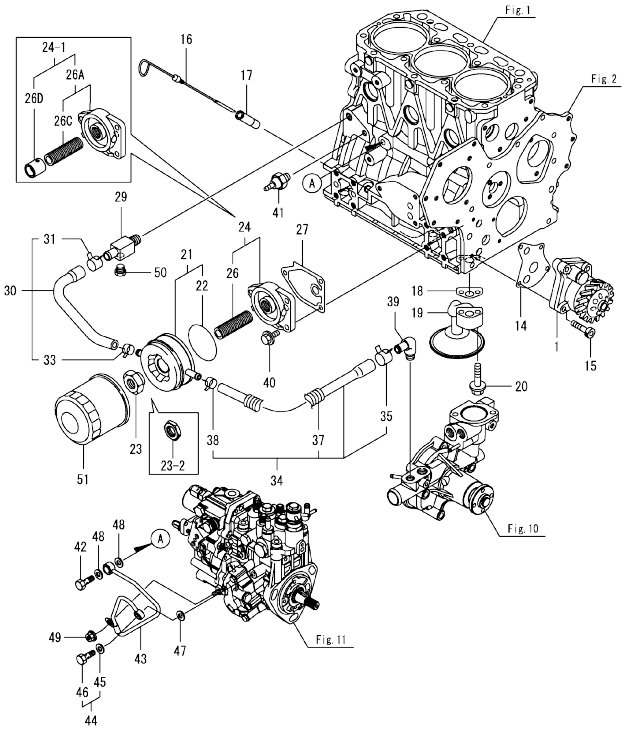

Remarks
(1)Spare part.
(2)Interchangeable by simultaneous replacement with No.23-2, 24-1.

(A)=3TNV88-BDHK (D)=
(B)= (E)=
(C)= (F)=

No.	Lev.	Parts No.	Description	Q'ty (A)	(B)	(C)	(D)	(E)	(F)	I	R
1	1	129001-32001	PUMP ASSY, OIL	1							
14	1	129150-32020	GASKET, PUMP	1							
15	1	26450-060252	BOLT, M6X 25	4							
16	1	129004-34802	DIPSTICK	1							
17	1	121520-34810	GUIDE, DIPSTICK	1							
18	1	129150-35042	GASKET	1							
19	1	129100-35301	PIPE ASSY, OIL INLET	1							
20	1	26106-080352	BOLT, M8X 35 PLATED	2							
21	1	129508-33010	COOLER ASSY, OIL	1							
21-1	1	129508-33031	COOLER ASSY, OIL	1						R	
	(A=E167085)										
22	2	129508-33050	O-RING	1							
22-1	2	129508-33060	GASKET, COOLER	1						R	
	(A=E167085)										
23	1	129417-33110	NUT	1							
23-1	1	129417-33111	NUT, OIL COOLER	1						R	
	(A=EI4249)										
23-2	1	124085-35350	NUT, M20	1						F	2
	(A=E167085)										
24	1	129006-35100	BRACKET ASSY, FILTER	1							
24-1	1	129508-35100	BRACKET ASSY,LO FILT	1						F	2
	(A=E167085)										
26	2	129417-35150	BOLT, STUD M20X67	1						Z	
	(A=E167085)										
26A	2	129006-35100	BRACKET ASSY, FILTER	1						W	
	(A=E167085)										
26C	3	129417-35150	STUD, M20X67	1						W	
	(A=E167085)										
26D	2	129508-35150	COLLAR, OIL-COOLER	1						W	
	(A=E167085)										
27	1	129150-35111	GASKET	1							
29	1	129006-44480	JOINT	1							
30	1	129508-49030	HOSE ASSY, WATER	1							
31	2	171008-03990	CLAMP, HOSE 18.5	1							
33	2	23080-015000	CLAMP, 15	1							
34	1	129006-49040	HOSE ASSY, WATER	1							
35	2	171008-03990	CLAMP, HOSE 18.5	1							
37	2	129642-49180	TUBE, CORRUGATED 19	1							
38	2	23080-015000	CLAMP, 15	1							
40	1	26106-080202	BOLT, M8X 20 PLATED	3							
41	1	114250-39450	SWITCH, HYDRAULIC	1							
42	1	124160-39140	BOLT, PIPE JOINT M10	1							
43	1	119802-39450	PIPE ASSY, OIL	1							
44	1	129005-59830	BOLT ASSY, JOINT M8	1							
45	2	22190-080002	WASHER, SEAL 6	1							
46	2	23857-030000	BOLT, JOINT 3	1							
47	1	22190-080002	WASHER, SEAL 6	1							
48	1	22190-100002	WASHER, SEAL 10	2							
49	1	26366-060002	NUT, M6	1							
50	1	171056-49120	PLUG, DRAIN R1/4	1							
51	1	119005-35151	FILTER, D80X100	1							1

N:Old $\xleftarrow[\text{No}]{\text{Yes}}$ New. Q:Old $\xleftarrow[\text{Yes}]{\text{No}}$ New. R:Old $\xleftarrow[\text{Yes}]{\text{Yes}}$ New. S:Old $\xleftarrow[\text{No}]{\text{No}}$ New. W:Add. Z:Discontinued. F:Interchangeable by set. K:Q'ty Change

Copyright (C) YANMAR GLOBAL CS CO., LTD. All RightsReserved.

Fig.10. COOLING WATER SYSTEM

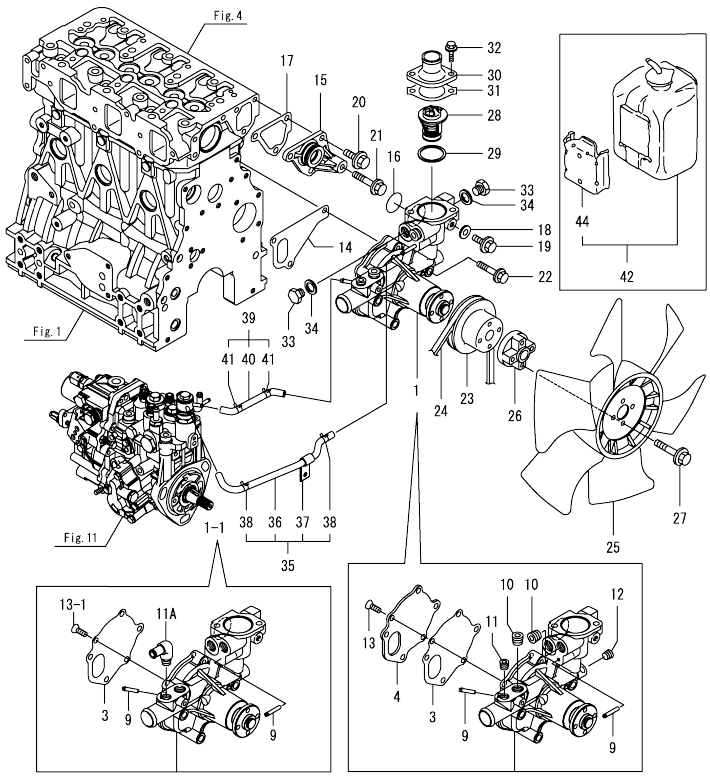

(A)=3TNV88-BDHK (D)=
(B)= (E)=
(C)= (F)=

No.	Lev.	Parts No.	Description	Q'ty (A)	(B)	(C)	(D)	(E)	(F)	I	R
1	1	129004-42001	PUMP ASSY, WATER	1							
1-1	1	129238-42000	PUMP ASSY, CW	1						N	
	(A=E164690)										
3	2	129100-42051	GASKET, WATER PUMP	1							
4	2	129100-42121	PLATE, PUMP	1							
9	2	119802-49113	JOINT, PIPE	2							
10	2	129916-49740	PLUG, R3/8	2							
11	2	23875-020000	PLUG, R02	1						Z	
	(A=E146022)										
11A	2	129103-49301	ELBOW, PT1/4	1						W	
	(A=E7248)										
12	2	23876-010000	PLUG, R01	1							
13	2	26577-060142	SCREW M 6X 14	3							
13-1	2	129150-42290	SCREW, FLAT M6X15	3						N	
	(A=E146022)										
14	1	129486-42021	GASKET, WATER PUMP	1							
15	1	129004-42040	JOINT	1							
16	1	129486-42140	O-RING, G30	1							
17	1	124395-49840	GASKET, THERMOSTAT	1							
18	1	23414-080000	GASKET, 8X1.0	1							
19	1	26106-080122	BOLT, M8X 12 PLATED	1							
20	1	26106-080162	BOLT, M8X 16 PLATED	3							
21	1	26106-080452	BOLT, M8X 45 PLATED	1							
22	1	26106-080602	BOLT, M8X 60 PLATED	3							
23	1	129550-42350	V-PULLEY, D=120	1							
24	1	129612-42380	V-BELT, A38.5	1							
25	1	129612-44700	FAN, COOLING	1							
26	1	171353-44760	SPACER, FAN	1							
27	1	26106-060402	BOLT, M6X 40 PLATED	4							
28	1	129155-49801	THERMOSTAT, 71C	1							
29	1	129150-49811	GASKET, THERMOSTAT	1							
30	1	129350-49530	COVER, THERMOSTAT	1							
31	1	129795-49551	GASKET	1							
32	1	26106-080222	BOLT, M8X 22 PLATED	2							
33	1	121450-42450	PLUG, M16	2							
34	1	124465-44950	GASKET, 16	2							
35	1	129004-49610	HOSE ASSY, WATER	1							
36	2	129004-49711	HOSE, WATER	1							
37	2	119802-49730	RETAINER, PIPE	1							
38	2	124722-59050	CLAMP, HOSE 9	2							
39	1	129004-49620	HOSE ASSY, WATER	1							
40	2	129004-49721	HOSE, WATER	1							
41	2	124722-59050	CLAMP, HOSE 9	2							
42	1	720445-44200	TANK ASSY, SUB	1							
44	2	120445-44540	SUPPORT	1							

N:Old ←Yes/No→ New. Q:Old ←No/Yes→ New. R:Old ←Yes/Yes→ New. S:Old ←No/No→ New. W:Add. Z:Discontinued. F:Interchangeable by set. K:Q'ty Change

Copyright (C) YANMAR GLOBAL CS CO., LTD. All RightsReserved.

Fig.11. FUEL INJECTION PUMP

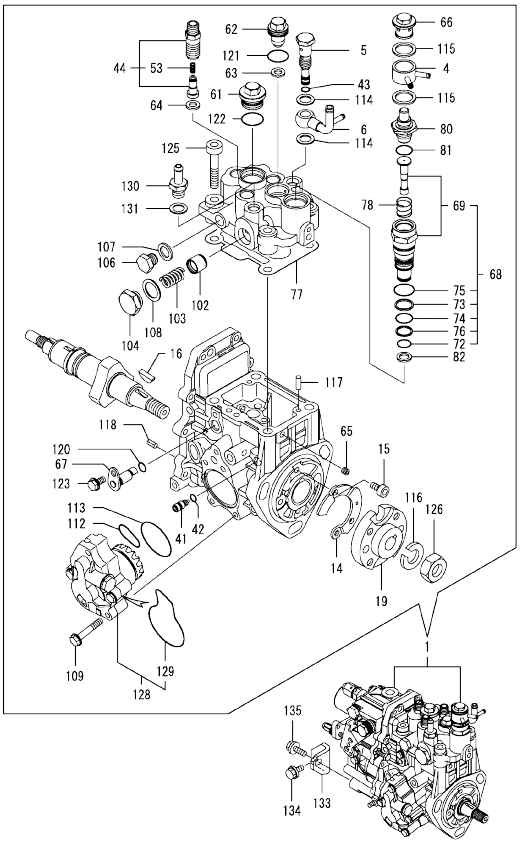

Remarks
(1)Governor(Fig.12)is incorporated in
this Fuel Injection Pump (Ref.1).

(A)=3TNV88-BDHK (D)=
(B)= (E)=
(C)= (F)=

No.	Lev.	Parts No.	Description	Q'ty (A)	(B)	(C)	(D)	(E)	(F)	I	R
1	1	729238-51570	FIE ASSY	1							1
4	2	158553-51551	JOINT	1							
5	2	158601-51650	JOINT, OVER FLOW	1							
6	2	158552-51670	JOINT, OVER FLOW	1							
14	2	129008-51900	COVER, GEAR CASE	1							
15	2	129008-51920	BOLT, M6X10	2							
16	2	119802-51090	KEY, 4X16	1							
19	2	158552-51151	FLANGE	1							
41	2	158600-51270	STOPPER, TAPPET	1							
42	2	158563-51281	O-RING, 4D S6	1							
43	2	158563-51281	O-RING, 4D S6	1							
44	2	129008-51390	VALVE ASSY, DELIVERY	3							
53	3	158563-51330	SPRING, DELIVERY	3							
61	2	158601-51550	PLUG	1							
62	2	119802-51560	PLUG, BARREL	1							
63	2	158552-51571	GASKET	1							
64	2	158552-51571	GASKET	3							
65	2	158557-51570	PLUG	1							
66	2	158601-51570	PLUG	1							
67	2	158552-51580	LIFTER	1							
68	2	119802-51590	TIMER SET	1							
69	3	119802-51600	TIMER ASSY	1							
72	3	158553-51670	O-RING, 1011	1							
73	3	119802-51680	RING, BACK UP	1							
74	3	119802-51690	O-RING	1							
75	3	24356-190200	O-RING, 4D19020	1							
76	3	24372-000150	RING, BACK UP T2P15	1							
77	2	158552-51600	GASKET	1							
78	2	158553-51630	SPRING, TIMER	1							
80	2	158553-51650	ELEMENT	1							
81	2	158553-51660	O-RING, P14	1							
82	2	158553-51680	GASKET	1							
102	2	158601-51770	PISTON	1							
103	2	158552-51781	SPRING	1							
104	2	158601-51790	PLUG	1							
106	2	158553-51930	PLUG, M12	1							
107	2	22190-120002	WASHER, SEAL 12	1							
108	2	22190-180002	WASHER, SEAL 18	1							
109	2	158553-51770	BOLT	4							
112	2	158552-52311	O-RING	1							
113	2	158552-52400	O-RING, 4E S42	1							
114	2	22190-120002	WASHER, SEAL 12	2							
115	2	22190-180002	WASHER, SEAL 18	2							
116	2	22217-140000	WASHER, SPRING 14	1							
117	2	22312-050140	PIN, PARALLEL M5X14	2							
118	2	22351-050010	PIN, SPRING 5.0X10	2							
120	2	24311-000070	O-RING, 1AP7.0	1							
121	2	24356-190180	O-RING, 4D19018	1							
122	2	24356-190200	O-RING, 4D19020	1							
123	2	26106-060102	BOLT, M6X 10 PLATED	1							
125	2	26450-080452	BOLT, M8X 45	4							

N:Old ←Yes/No→ New. Q:Old ←No/Yes→ New. R:Old ←Yes/Yes→ New. S:Old ←No/No→ New. W:Add. Z:Discontinued. F:Interchangeable by set. K:Q'ty Change

++ CONTINUE ++

Copyright (C) YANMAR GLOBAL CS CO., LTD. All RightsReserved.

Fig.11. FUEL INJECTION PUMP

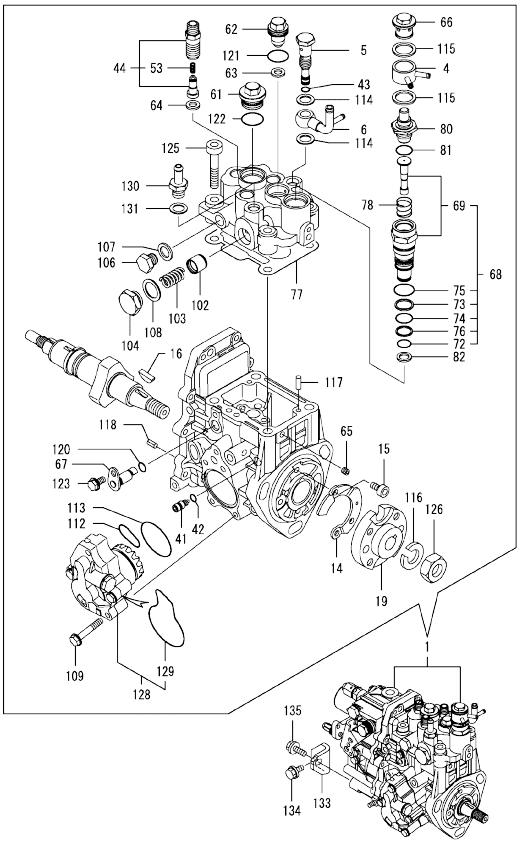

Remarks
(1)Governor(Fig.12)is incorporated in
this Fuel Injection Pump (Ref.1).

(A)=3TNV88-BDHK
(B)=
(C)=
(D)=
(E)=
(F)=

No.	Lev.	Parts No.	Description	Q'ty (A)	(B)	(C)	(D)	(E)	(F)	I	R
126	2	26776-140002	NUT, LOCK M14	1							
128	2	158552-52100	PUMP ASSY, FUEL FEED	1							
129	3	158552-52500	O-RING	1							
130	2	119934-59910	JOINT, PIPE	1							
131	2	22190-120002	WASHER, SEAL 12	1							
133	1	119802-51250	RETAINER, PUMP	1							
134	1	26106-080162	BOLT, M8X 16 PLATED	1							
135	1	26106-080202	BOLT, M8X 20 PLATED	1							

N:Old ←Yes/No→ New. Q:Old ←No/Yes→ New. R:Old ←Yes/Yes→ New. S:Old ←No/No→ New. W:Add. Z:Discontinued. F:Interchangeable by set. K:Q'ty Change

Copyright (C) YANMAR GLOBAL CS CO., LTD. All RightsReserved.

Fig.12. GOVERNOR

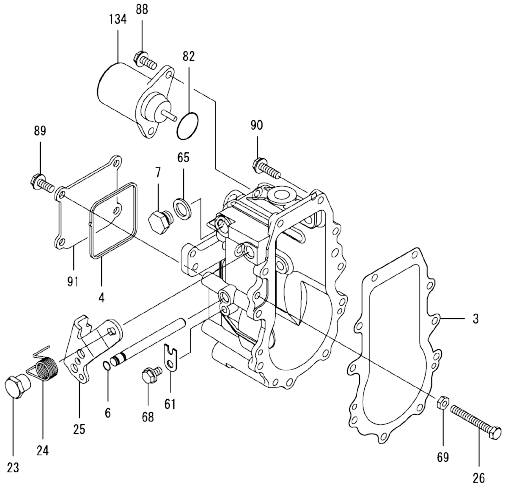

Remarks
*This figure(Governor)is incorporated
in the Fuel Injection Pump (Fig.11).

(A)=3TNV88-BDHK (D)=
(B)= (E)=
(C)= (F)=

No.	Lev.	Parts No.	Description	Q'ty (A)	(B)	(C)	(D)	(E)	(F)	I	R
3	2	158553-61050	GASKET	1							
4	2	158553-61070	GASKET	1							
6	2	129155-51280	O-RING, S6	1							
7	2	158553-51930	PLUG, M12	1							
23	2	129255-61410	NUT, LOCK	1							
24	2	119807-61420	SPRING, RETURN	1							
25	2	158552-61441	LEVER, REGULATOR	1							
26	2	129155-61460	BOLT, IDLE	1							
61	2	119660-61901	RETAINER, SHAFT	1							
65	2	22190-120002	WASHER, SEAL 12	1							
68	2	26106-060102	BOLT, M6X 10 PLATED	1							
69	2	26756-060002	NUT, LOCK M6	1							
82	2	158552-61900	O-RING	1							
88	2	26106-060142	BOLT, M6X 14 PLATED	2							
89	2	26106-060142	BOLT, M6X 14 PLATED	4							
90	2	26106-060202	BOLT, M6X 20 PLATED	10							
91	2	129642-61060	COVER, GOVERNOR CASE	1							
134	2	119233-77932	SOLENOID, STOP	1							

N:Old $\frac{\text{Yes}}{\text{No}}$ New. Q:Old $\frac{\text{No}}{\text{Yes}}$ New. R:Old $\frac{\text{Yes}}{\text{Yes}}$ New. S:Old $\frac{\text{No}}{\text{No}}$ New. W:Add. Z:Discontinued. F:Interchangeable by set. K:Q'ty Change

Copyright (C) YANMAR GLOBAL CS CO., LTD. All RightsReserved.

Fig.13. FUEL INJECTION VALVE

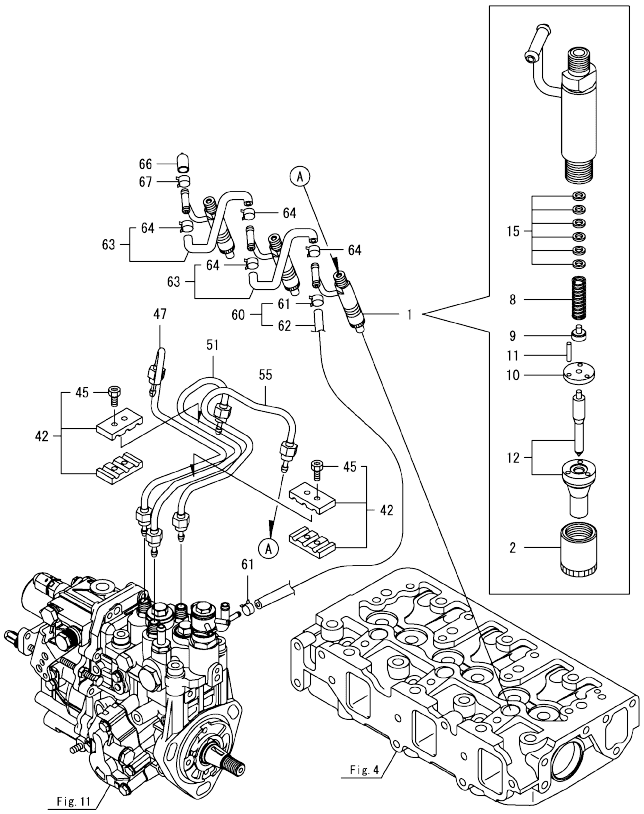

(A)=3TNV88-BDHK (D)=
(B)= (E)=
(C)= (F)=

No.	Lev.	Parts No.	Description	Q'ty (A)	(B)	(C)	(D)	(E)	(F)	I	R
1	1	729604-53400	VALVE ASSY,INJECTION	3							
2	2	114250-53080	NUT, NOZZLE D16.95	3							
8	2	114250-53120	SPRING, NOZZLE	3							
9	2	114250-53130	SEAT, SPRING	3							
10	2	114250-53140	PLATE	3							
11	2	114250-53210	PIN	6							
12	2	129604-53300	VALVE ASSY,INJECTION	3							
15	2	119803-53400	SHIM SET	3							
42	1	129150-59120	RETAINER, PIPE	2							
45	2	129150-59131	BOLT, M4X14	4							
47	1	129004-59811	PIPE ASSY, INJECTION	1							
51	1	129004-59821	PIPE ASSY, INJECTION	1							
55	1	129004-59831	PIPE ASSY, INJECTION	1							
60	1	119802-59550	PIPE ASSY, RETURN	1							
61	2	124722-59050	CLIP, HOSE 9	2							
62	2	119802-59560	PIPE, FUEL RETURN	1							
63	1	129486-59551	PIPE ASSY, RETURN	2							
64	2	124722-59050	CLIP, HOSE 9	4							
66	1	119593-59581	CAP	1							
67	1	124060-77680	CLIP, HOSE 10	1							

N:Old ←Yes/No→ New. Q:Old ←No/Yes→ New. R:Old ←Yes/Yes→ New. S:Old ←No/No→ New. W:Add. Z:Discontinued. F:Interchangeable by set. K:Q'ty Change

Copyright (C) YANMAR GLOBAL CS CO., LTD. All RightsReserved.

Fig.14. FUEL LINE

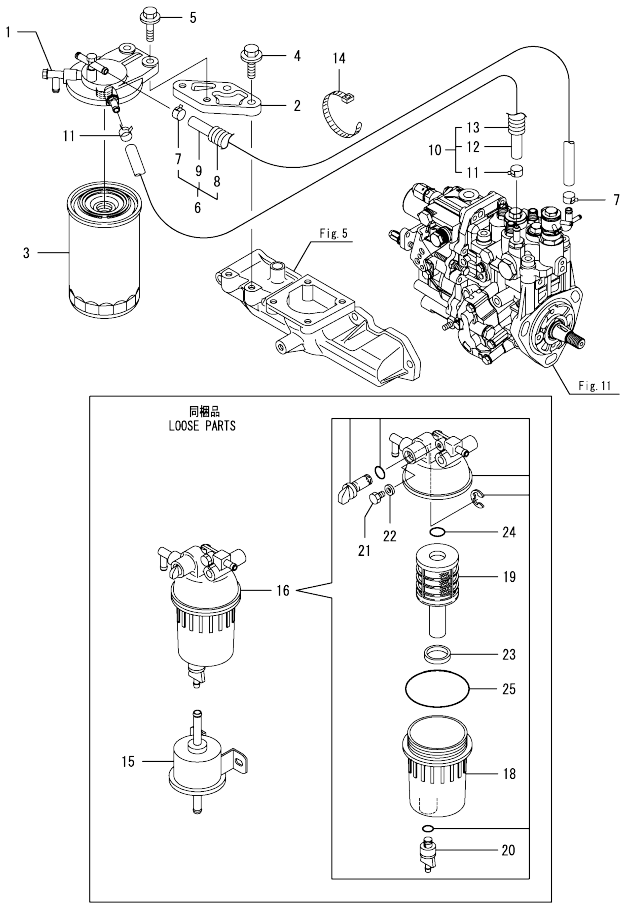

(A)=3TNV88-BDHK (D)=
(B)= (E)=
(C)= (F)=

No.	Lev.	Parts No.	Description	Q'ty (A)	(B)	(C)	(D)	(E)	(F)	I	R
1	1	129004-55612	BRACKET, FILTER	1							
2	1	119940-55690	SPACER	1							
3	1	129907-55801	FILTER, FUEL	1							
4	1	26106-080252	BOLT, M8X 25 PLATED	2							
5	1	26106-080302	BOLT, M8X 30 PLATED	2							
6	1	129457-59010	PIPE ASSY, FUEL	1							
7	2	124766-59050	CLIP, HOSE 12	2							
8	2	129957-59120	TUBE, CORRUGATED	1							
9	2	105025-59750	PIPE, FUEL	1							
10	1	129961-59310	PIPE ASSY, FUEL	1							
11	2	124766-59050	CLIP, HOSE 12	2							
12	2	129136-59110	PIPE, D13/7.5X270	1							
13	2	129961-59110	TUBE, CORRUGATED	1							
14	1	121750-59890	BAND, 140	1							
15	1	129612-52100	PUMP ASSY, FUEL FEED	1							
16	1	129268-55701	SEPARATOR ASSY	1							
18	2	129242-55720	CUP	1							
19	2	129242-55730	ELEMENT	1							
20	2	129242-55740	PLUG, DRAIN	1							
21	2	129242-55750	VALVE, AIR VENT	1							
22	2	129242-55760	GASKET	1							
23	2	129242-55770	FLOAT	1							
24	2	24311-000160	O-RING, 1AP16.0	1							
25	2	24321-000750	O-RING, 1AG75.0	1							

N:Old ←Yes/No→ New. Q:Old ←No/Yes→ New. R:Old ←Yes/Yes→ New. S:Old ←No/No→ New. W:Add. Z:Discontinued. F:Interchangeable by set. K:Q'ty Change

Copyright (C) YANMAR GLOBAL CS CO., LTD. All RightsReserved.

Fig.15. STARTING MOTOR

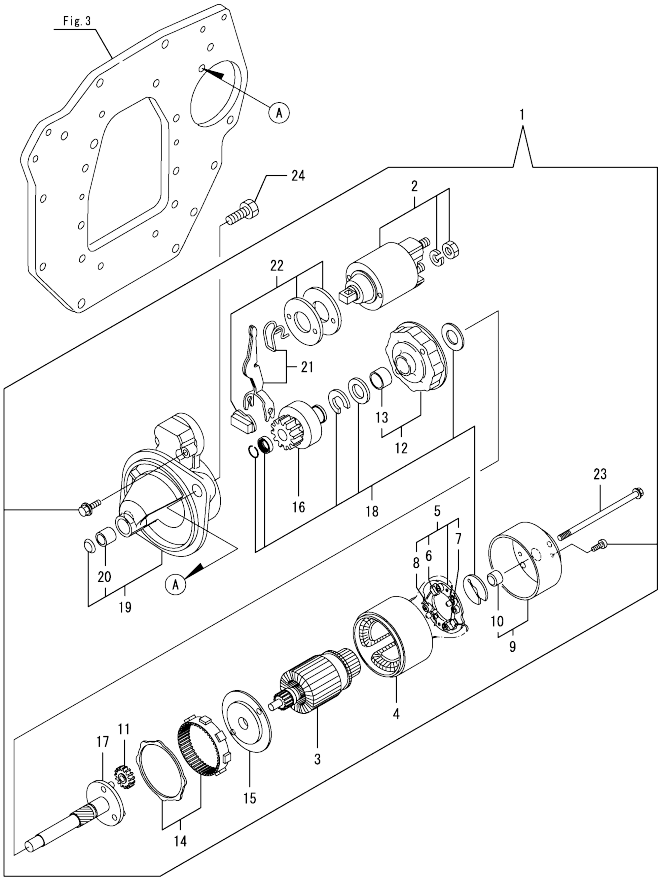

(A)=3TNV88-BDHK (D)=
(B)= (E)=
(C)= (F)=

No.	Lev.	Parts No.	Description	Q'ty (A)	(B)	(C)	(D)	(E)	(F)	I	R
1	1	129242-77010	STARTER	1							
2	2	129698-77020	MAGNETIC SWITCH ASSY	1							
3	2	129242-77100	ARMATURE ASSY	1							
4	2	129242-77110	YOKE ASSY	1							
5	2	129242-77120	BRUSH HOLDER ASSY	1							
6	3	129242-77130	BRUSH(-)	2							
7	3	129242-77140	BRUSH(+) SET	1							
8	3	129242-77150	BRUSH SPRING	4							
9	2	129242-77160	REAR COVER ASSY	1							
10	3	129242-77170	REAR COVER METAL	1							
11	2	118400-77170	GEAR	3							
12	2	129242-77180	CENTER BRACKET(P)	1							
13	3	129698-77190	BRACKET	1							
14	2	129698-77200	GEAR, INTERNAL	1							
15	2	129242-77210	CENTER BRACKET(A)	1							
16	2	129698-77220	PINION ASSY	1							
17	2	129698-77230	SHAFT(PINION	1							
18	2	129698-77250	WASHER SET	1							
19	2	129242-77260	GEAR CASE ASSY	1							
20	3	X2114535200	METAL, STARTER	1							
21	2	129242-77270	SHIFT LEVER SET	1							
22	2	129242-77280	DUST COVER KIT	1							
23	2	124195-77770	THROUGH BOLT	2							
24	1	26116-120202	BOLT, M12X 20 PLATED	2							

N:Old ←Yes/No→ New. Q:Old ←No/Yes→ New. R:Old ←Yes/Yes→ New. S:Old ←No/No→ New. W:Add. Z:Discontinued. F:Interchangeable by set. K:Q'ty Change

Copyright (C) YANMAR GLOBAL CS CO., LTD. All RightsReserved.

Fig.16. GENERATOR

(A)=3TNV88-BDHK
(B)=
(C)=
(D)=
(E)=
(F)=

No.	Lev.	Parts No.	Description	Q'ty (A)	(B)	(C)	(D)	(E)	(F)	I	R
1	1	129795-01900	STUD	1							
2	1	129423-77200	GENERATOR, 12V-40A	1							
3	2	X9490561001	NUT	1							
4	2	119620-77380	ROTOR ASSY	1							
5	3	123501-79240	BEARING, BALL	1							
6	3	119620-79250	COVER, BEARING	1							
7	2	119620-77421	FRAME ASSY, DRIVE	1							
8	3	119620-79200	BALL BEARING	1							
9	3	119620-79210	PLATE, RETAINER	1							
10	3	119620-79220	SCREW	4							
11	3	119620-79230	STUD	2							
12	2	119620-77440	FLAME ASSY, REAR	1							
13	2	119620-77461	PULLEY	1							
14	2	119620-77471	NUT	1							
15	2	119620-77490	COLLAR	1							
16	2	129423-77710	REGULATOR ASSY	1							
17	2	119620-79260	HOLDER	1							
18	2	129052-79270	HOLDER, BRUSH	1							
19	3	119620-77480	BRUSH ASSY	2							
20	3	119620-79280	SPRING	2							
21	2	119620-79290	SCREW	6							
22	2	119620-79300	SCREW	1							
23	2	129240-79300	COVER	1							
24	2	119620-79310	BOLT	3							
25	2	119620-79320	SCREW	2							
26	2	119620-79330	BOLT	2							
27	2	119620-79340	BUSH, INSULATION	1							
28	2	119620-79350	NUT	2							
29	2	119620-79360	WASHER, THRUST	1							
30	1	26306-100002	NUT, M10	1							
31	1	119940-77270	SPACER, GENERATOR	1							
32	1	119802-77330	ADJUSTER	1							
33	1	129972-77341	BOLT, ADJUSTER L=50	1							
34	1	26106-080452	BOLT, M8X 45 PLATED	1							
35	1	119802-77200	RELAY, SAFETY	1							
36	1	119650-77911	RELAY ASSY, GLOW	2							
39	1	129115-91250	SWITCH ASSY	1							
41	2	129115-91270	KEY ASSY	1							

同梱品
LOOSE PARTS

Fig. 2

Fig. 10

N:Old $\frac{\text{Yes}}{\text{No}}$ New. Q:Old $\frac{\text{No}}{\text{Yes}}$ New. R:Old $\frac{\text{Yes}}{\text{Yes}}$ New. S:Old $\frac{\text{No}}{\text{No}}$ New. W:Add. Z:Discontinued. F:Interchangeable by set. K:Q'ty Change

Copyright (C) YANMAR GLOBAL CS CO., LTD. All RightsReserved.

Fig.17. GASKET SET

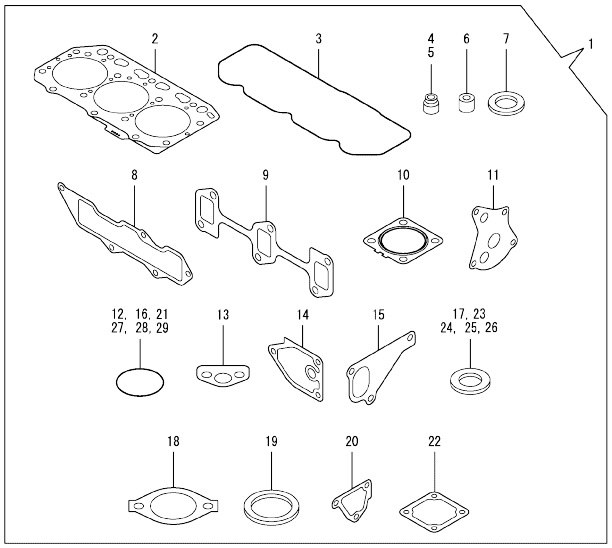

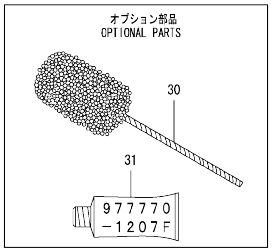

Remarks
(1)Optional parts.

(A)=3TNV88-BDHK (D)=
(B)= (E)=
(C)= (F)=

No.	Lev.	Parts No.	Description	Q'ty (A)	(B)	(C)	(D)	(E)	(F)	I	R
1	1	729005-92660	GASKET SET	1							1
2	2	129001-01340	GASKET, HEAD	1							
3	2	129004-11310	GASKET, BONNET	1							
4	2	121400-11340	SEAL, VALVE STEM	3							
5	2	124460-11340	SEAL, VALVE STEM	3							
6	2	119802-11870	PROTECTOR, NOZZLE	3							
7	2	119625-11880	SEAT, NOZZLE	3							
8	2	129001-12110	GASKET, MANIFOLD	1							
9	2	129150-13110	GASKET	1							
10	2	129004-13200	GASKET, SILENCER	1							
11	2	129150-32020	GASKET, PUMP	1							
12	2	119609-32040	O-RING, P16	2							
13	2	129150-35042	GASKET	1							
14	2	129150-35111	GASKET	1							
15	2	129486-42021	GASKET, WATER PUMP	1							
16	2	129486-42140	O-RING, G30	1							
17	2	124465-44950	GASKET, 16	2							
18	2	129795-49551	GASKET	1							
19	2	129150-49811	GASKET, THERMOSTAT	1							
20	2	124395-49840	GASKET	1							
21	2	121850-51960	O-RING	1							
22	2	129150-77511	GASKET	1							
23	2	22190-080002	WASHER, SEAL 6	2							
24	2	22190-100002	WASHER, SEAL 10	2							
25	2	22190-220002	WASHER, SEAL 22	1							
26	2	23414-080000	GASKET, 8X1.0	1							
27	2	24311-000120	O-RING, 1AP12.0	3							
28	2	24311-000320	O-RING, 1AP32.0	3							
29	2	24341-000240	O-RING, 1AS24.0	1							
30	1	129400-92430	HONE	1							1
31	1	977770-1207F	GASKET.LIQUID	1							1

N:Old $\frac{\text{Yes}}{\text{No}}$ New. Q:Old $\frac{\text{No}}{\text{Yes}}$ New. R:Old $\frac{\text{Yes}}{\text{Yes}}$ New. S:Old $\frac{\text{No}}{\text{No}}$ New. W:Add. Z:Discontinued. F:Interchangeable by set. K:Q'ty Change

Copyright (C) YANMAR GLOBAL CS CO., LTD. All RightsReserved.

Parts No. Index

Parts No.	Fig. No.	Ref. No.
105025-59750	14	9
114250-39450	9	41
114250-53080	13	2
114250-53120	13	8
114250-53130	13	9
114250-53140	13	10
114250-53210	13	11
118400-77170	15	11
119005-35151	9	51
119131-18320	6	5
119233-77932	12	134
119593-59581	13	66
119609-32040	2	9
	17	12
119620-77380	16	4
119620-77421	16	7
119620-77440	16	12
119620-77461	16	13
119620-77471	16	14
119620-77480	16	19
119620-77490	16	15
119620-79200	16	8
119620-79210	16	9
119620-79220	16	10
119620-79230	16	11
119620-79250	16	6
119620-79260	16	17
119620-79280	16	20
119620-79290	16	21
119620-79300	16	22
119620-79310	16	24
119620-79320	16	25
119620-79330	16	26
119620-79340	16	27
119620-79350	16	28
119620-79360	16	29
119625-11880	4	30
	17	7
119640-01640	3	7
119650-77911	16	36
119660-61901	12	61
119802-01561	2	5
119802-03110	4	41
119802-03121	4	42
119802-03130	4	43
119802-03141	4	44
119802-11260	4	4
119802-11270	4	5
119802-11280	4	6
119802-11870	4	29

Parts No.	Fig. No.	Ref. No.
119802-11870	17	6
119802-25071	7	16
119802-25101	7	10
119802-25901	7	15
119802-39450	9	43
119802-49113	10	9
119802-49730	10	37
119802-51090	11	16
119802-51250	11	133
119802-51560	11	62
119802-51590	11	68
119802-51600	11	69
119802-51680	11	73
119802-51690	11	74
119802-59550	13	60
119802-59560	13	62
119802-77200	16	35
119802-77330	16	32
119803-01520	2	4
119803-21200	8	4
119803-25050	7	9
119803-53400	13	15
119807-61420	12	24
119865-21600	8	14
119934-01800	2	3
119934-59910	11	130
119940-55690	14	2
119940-77270	16	31
120130-11860	4	57
120270-54410	4	32
120445-44540	10	44
121023-01551	2	19
121111-21501	8	11
121400-11340	4	25
	17	4
121450-42450	10	33
121520-34810	9	17
121550-23200	8	28
121750-59890	14	14
121850-21680	8	10
121850-51960	2	10
	17	21
123501-79240	16	5
123900-13610	6	3
123900-13630	6	4
124060-01050	1	4
124060-77680	13	67
124085-35350	9	23 -2
124160-01751	2	6
	4	37

Parts No.	Fig. No.	Ref. No.
124160-01910	1	6
		7
124160-11360	4	49
124160-39140	9	42
124195-77770	15	23
124240-01871	2	7
124395-49840	10	17
	17	20
124460-11340	4	26
	17	5
124465-44950	10	34
	17	17
124722-59050	10	38
		41
	13	61
		64
124766-59050	14	7
		11
129001-01250	1	5
129001-01340	1	28
	17	2
129001-02931	1	29
129001-12110	5	4
	17	8
129001-32001	9	1
129004-03010	4	39
129004-11241	4	1
129004-11251	4	2
129004-11310	4	46
	17	3
129004-11350	4	38
129004-11650	4	8
129004-11900	4	31
129004-13200	6	7
	17	10
129004-21650	8	8
129004-34802	9	16
129004-42001	10	1
129004-42040	10	15
129004-49610	10	35
129004-49620	10	39
129004-49711	10	36
129004-49721	10	40
129004-55612	14	1
129004-59811	13	47
129004-59821	13	51
129004-59831	13	55
129005-03080	5	1
129005-11100	4	21
129005-12101	5	3

Parts No.	Fig. No.	Ref. No.
129005-22080	8	15
129005-22500	8	17
129005-22900	8	34
129005-22950	8	36
129005-59830	9	44
129006-35100	9	24
		26 A
129006-44480	9	29
129006-49040	9	34
129008-21000	8	1
129008-51390	11	44
129008-51900	11	14
129008-51920	11	15
129008-77800	4	54
129008-77820	4	55
129052-79270	16	18
129100-01580	3	1
		14
	8	2
129100-01730	3	5
129100-01760	3	6
129100-11112	4	22
129100-23910	8	31
129100-35301	9	19
129100-42051	10	3
129100-42121	10	4
129103-49301	10	11 A
129115-91250	16	39
129115-91270	16	41
129128-21590	8	12
129129-01600	3	2
129129-14580	7	3
129136-59110	14	12
129150-01200	1	27
129150-02020	1	9
129150-02450	7	4
129150-02871	1	32
129150-02931	1	24
129150-02941	1	35
129150-03070	4	40
129150-11230	4	9
129150-11280	4	7
129150-11370	4	12
129150-11750	4	11
129150-11810	4	58
129150-13110	6	2
	17	9
129150-14101	7	6
129150-14200	7	1
129150-14400	7	2

Parts No. Index

Parts No.	Fig. No.	Ref. No.
129150-23601	8	29
129150-23611	8	32
129150-25301	7	14
129150-32020	9	14
	17	11
129150-35042	9	18
	17	13
129150-35111	9	27
	17	14
129150-42290	10	13 -1
129150-49811	10	29
	17	19
129150-59120	13	42
129150-59131	13	45
129150-77511	5	8
	17	22
129155-49801	10	28
129155-51280	12	6
129155-61460	12	26
129202-22300	8	23
129238-11710	4	13
129238-42000	10	1 -1
129240-79300	16	23
129242-55720	14	18
129242-55730	14	19
129242-55740	14	20
129242-55750	14	21
129242-55760	14	22
129242-55770	14	23
129242-77010	15	1
129242-77100	15	3
129242-77110	15	4
129242-77120	15	5
129242-77130	15	6
129242-77140	15	7
129242-77150	15	8
129242-77160	15	9
129242-77170	15	10
129242-77180	15	12
129242-77210	15	15
129242-77260	15	19
129242-77270	15	21
129242-77280	15	22
129255-61410	12	23
129268-55701	14	16
129350-49530	10	30
129400-92430	17	30
129410-03990	5	2
129417-33110	9	23
129417-33111	9	23 -1

Parts No.	Fig. No.	Ref. No.
129417-35150	9	26
		26 C
129423-77200	16	2
129423-77710	16	16
129457-59010	14	6
129486-01670	3	18
129486-12581	5	7
129486-42021	10	14
	17	15
129486-42140	10	16
	17	16
129486-59551	13	63
129508-33010	9	21
129508-33031	9	21 -1
129508-33050	9	22
129508-33060	9	22 -1
129508-35100	9	24 -1
129508-35150	9	26 D
129508-49030	9	30
129550-42350	10	23
129604-53300	13	12
129612-42380	10	24
129612-44700	10	25
129612-52100	14	15
129630-77800	4	56
129642-49180	9	37
129642-61060	12	91
129648-01600	3	15
129648-01780	3	17
129688-07900	4	52 -2
129698-77020	15	2
129698-77190	15	13
129698-77200	15	14
129698-77220	15	16
129698-77230	15	17
129698-77250	15	18
129795-01900	16	1
129795-01950	2	8
129795-02412	1	12
129795-11120	4	23
129795-11180	4	24
129795-21661	8	9
129795-49551	10	31
	17	18
129900-07900	4	52
		52 -1
129907-55801	14	3
129916-49740	10	10
129957-59120	14	8
129961-59110	14	13

Parts No.	Fig. No.	Ref. No.
129961-59310	14	10
129972-77341	16	33
158552-51151	11	19
158552-51571	11	63
		64
158552-51580	11	67
158552-51600	11	77
158552-51670	11	6
158552-51781	11	103
158552-52100	11	128
158552-52311	11	112
158552-52400	11	113
158552-52500	11	129
158552-61441	12	25
158552-61900	12	82
158553-51551	11	4
158553-51630	11	78
158553-51650	11	80
158553-51660	11	81
158553-51670	11	72
158553-51680	11	82
158553-51770	11	109
158553-51930	11	106
	12	7
158553-61050	12	3
158553-61070	12	4
158557-51570	11	65
158563-51281	11	42
		43
158563-51330	11	53
158600-51270	11	41
158601-51550	11	61
158601-51570	11	66
158601-51650	11	5
158601-51770	11	102
158601-51790	11	104
171008-03990	9	31
		35
171031-11741	2	22
171051-01921	1	8
171056-49120	9	50
171350-13100	6	1
171353-44760	10	26
22190-080002	2	11
	9	45
		47
	17	23
22190-100002	9	48
	17	24
22190-120002	11	107

Parts No.	Fig. No.	Ref. No.
22190-120002	11	114
		131
	12	65
22190-180002	11	108
		115
22190-220002	3	9
	17	25
22217-140000	11	116
22252-000260	8	24
22312-050140	11	117
22351-030010	8	7
22351-050010	11	118
22351-060012	4	33
22512-070140	7	7
	8	5
22857-500100	4	47
		48
23080-015000	9	33
		38
23414-080000	10	18
	17	26
23857-030000	9	46
23875-020000	10	11
23876-010000	10	12
24311-000070	11	120
24311-000120	4	50
	17	27
24311-000160	14	24
24311-000320	2	12
		23
	4	51
	17	28
24321-000750	14	25
24341-000240	2	20
	17	29
24356-190180	11	121
24356-190200	11	75
		122
24372-000150	11	76
26106-060102	11	123
	12	68
26106-060142	12	88
		89
26106-060162	2	21
26106-060202	12	90
26106-060402	10	27
26106-080122	10	19
26106-080142	7	8
26106-080162	2	13
		14

Parts No. Index

Parts No.	Fig. No.	Ref. No.
26106-080162	3	10
	4	53
	10	20
	11	134
26106-080202	5	5
		9
	9	40
	11	135
26106-080222	10	32
26106-080252	3	11
	4	34
	14	4
26106-080302	2	15
	14	5
26106-080352	3	19
	4	35
	9	20
26106-080402	7	13
26106-080452	3	12
	10	21
	16	34
26106-080502	3	13
	4	36
26106-080552	2	16
26106-080602	10	22
26106-080802	5	6
26106-080852	2	17
26116-120202	15	24
26206-100202	3	3
26206-100252	3	4
26306-080002	2	18
	6	6
26306-100002	16	30
26366-060002	9	49
26450-060252	9	15
26450-080452	11	125
26577-060142	10	13
26756-060002	12	69
26776-140002	11	126
27241-120000	1	13
27241-300000	1	14
27241-400000	4	20
27310-080001	4	27
719803-01500	2	1
720445-44200	10	42
729005-01560	1	1
729005-92660	17	1
729238-51570	11	1
729402-23100	8	25
729604-53400	13	1

Parts No.	Fig. No.	Ref. No.
977770-1207F	17	31
X2114535200	15	20
X9490561001	16	3

Parts No.	Fig. No.	Ref. No.

Parts No.	Fig. No.	Ref. No.