YANMAR

PARTS CATALOG

0CW10-M26000EN

Last update Sep., 2014

PREFACE

1. This parts catalog is the 1st edition of 3TNV88-BSNS for Neuson

Pub.No. : 000Y00W2600

Published : November,2007

2. Model name

Engine model	Vehicle Products	Vehicle made by
3TNV88-BSNS	Excavator	Neuson

Directions for the Parts Catalog.

1.This Parts Catalog shows both standard and optional parts.
2.Parts may change without prior notice.
3.The following is an example of the Parts Catalog format.

0CF10-G21601 29. FUEL INJECTION PUMP(W/BOOST)

(A)=4JH-DT
(B)=4JH-DTZ
(C)=4JH-DTZP
(D)=4JH-DTZA
(E)=4JH-DTZY
(F)=

① REF.	② LEV.	PARTS NO.	DESCRIPTION	Q'TY (A)	(B)	(C)	(D)	(E)	(F)	③ I	⑤ R
1	1	729595-51390	FUEL INJECTION PUMP	1	1	1	1	1			1
1-1	1	729595-51391	FUEL INJECTION PUMP	1	1	1	1	1		N	1
	(A=E00185)	(B=E00200)									
3	2	26022-060162	SCREW M 6X 16	9	9	9	9	9			
3-1 ④	2	26022-060162	SCREW M 6X 16	4	4	4	4	4		K	
	(A=E00156)	(B=E00156)	(C=E00156) (D=E00156)	(E=E00156)							
4	2	129470-51040	CAMSHAFT	1	1	1	1	1			
5	2	122710-51050	BEARING, ROLLER	2	2	2	2	2			
6	2	129470-51060	RETAINER	1	1	1	1	1			

Remarks
(1) BOOST COMPEMSATOR TYPE. OPTIONAL
PART, TO E00155,(4JH-DT, 4JH-DTZ

①Ref. No.

The Ref. No. listed may not be in accordance with the illustration Ref. No.

(Ex.) Illustration No. 1 — List Ref No. 1 (Before change) → 1- 1 (After change)

For interchangeable symbols N, R and K, illustrations for new parts may be abbreviated.

②Lev. (Level)

Level indication
The numbers below indicate the level of relativity towards the main part.
1 ----- Main parts (Assembly parts)
2 ----- Sub component included in " 1 ".
3 ----- Sub component included in " 2 ".
Note) Parts that are not for sale are partially illustrated but not listed.

③Interchangeability Symbol

When a part change takes place, one of the following interchangeability symbols is indicated beside the part.

Symbol	Interchangeability	Contents note
N	Old ← Yes / → No New	New Part is interchangeable for Old Part but Old Part is not interchangeable for New Part.
Q	Old ← No / → Yes New	New Part is not interchangeable for Old Part but Old Part is interchangeable for New Part.
R	Old ← Yes / → Yes New	New/ Old Parts are both interchangeable.
S	Old ← No / → No New	New/ Old Parts are both not interchangeable.
W		Part newly added.
Z		Part discontinued.
F		Not interchangeable by a single part but interchangeable together with related parts.
K		Changes only for used parts quantities.

④Effective Machine No.

When a part changes, the effective Machine No. will be indicated in the (A)-(F) column.

Product Symbol	Product No.	Product Symbol	Product No.
C	Clutch No. Compressor No.	F	Machine No. (Agricultural Equip.)
D	Drive No.	M	Machine No.
E	Engine No.		

Note 1) A date may follow the symbol. (Ex.) 1996.01
Note 2) " XXXXX " and " ZZZZZ " are for parts that could not be predicted or for engine models that could not be identified.
Note 3) (A=E00185) is the E (Engine Serial Number) for the column (A) model (in this case 4JH-DT) after the parts design change.

⑤Remarks

Figures or alphabets (symbols) are entered in the remarks column.
The comments (remarks) on parts that are indicated at the bottom of the illustration are the same symbols as those stated above.

Contents

0CW10-M26000

Fig. No.	Fig. Name
3TNV88-BSNS	
1.	CYLINDER BLOCK
2.	GEAR HOUSING
3.	FLYWHEEL HOUSING & OIL SUMP
4.	CYLINDER HEAD & BONNET
5.	SUCTION MANIFOLD
6.	EXHAUST MANIFOLD
7.	CAMSHAFT & DRIVING GEAR
8.	CRANKSHAFT & PISTON
9.	LUB.OIL SYSTEM
10.	COOLING WATER SYSTEM
11.	FUEL INJECTION PUMP
12.	GOVERNOR
13.	FUEL INJECTION VALVE
14.	FUEL LINE
15.	STARTING MOTOR
16.	GENERATOR
17.	GASKET SET

Fig. No.	Fig. Name

Fig.1. CYLINDER BLOCK

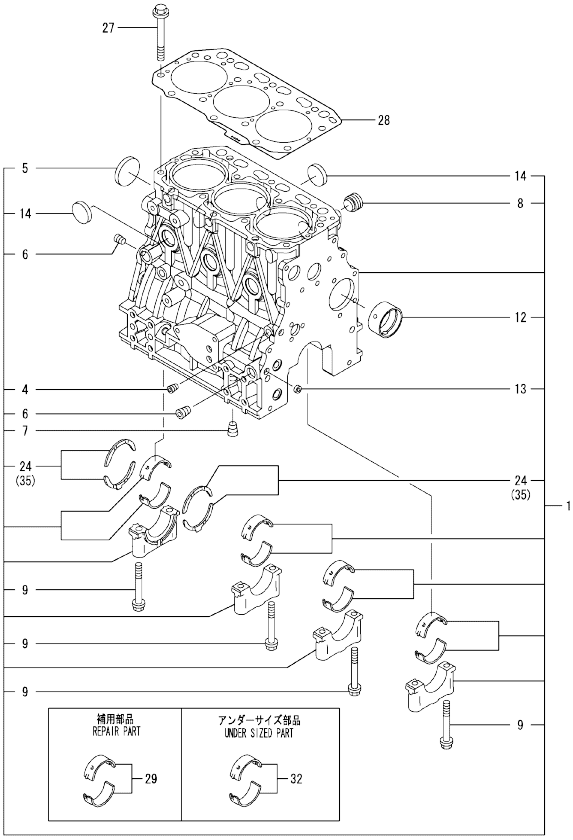

Remarks
(1) REPAIR PART.
(2) UNDER-SIZED(U.S=0.25)PART.
(3) OVER-SIZED(O.S=0.25)PART.

(A)=3TNV88-BSNS (D)=
(B)= (E)=
(C)= (F)=

No.	Lev.	Parts No.	Description	Q'ty (A)	(B)	(C)	(D)	(E)	(F)	I	R
1	1	729005-01560	BLOCK ASSY, CYLINDER	1							
4	2	124060-01050	PLUG, PT1/8	1							
5	2	129001-01250	PLUG, 50	1							
6	2	124160-01910	PLUG, PT1/4	2							
7	2	124160-01910	PLUG, PT1/4	1							
8	2	171051-01921	PLUG, NPTF1	1							
9	2	129150-02020	BOLT, METAL CAP	8							
12	2	129795-02412	BUSH, CAMSHAFT	1							
13	2	27241-120000	PLUG, 12	2							
14	2	27241-300000	PLUG 30	6							
24	2	129150-02931	BEARING, THRUST	2							
27	1	129150-01200	BOLT, HEAD	14							
28	1	129001-01340	GASKET, HEAD	1							
29	1	129001-02931	BEARING, MAIN	4							1
32	1	129150-02871	BEARING, 0.25 US	4							2
35	1	129150-02941	BEARING, THRUST 0.25	1							3

N:Old ←Yes/No→ New. Q:Old ←No/Yes→ New, R:Old ←Yes/Yes→ New. S:Old ←No/No→ New. W:Add. Z:Discontinued. F:Interchangeable by set. K:Q'ty Change

Copyright (C) YANMAR CO., LTD. All RightsReserved.

Fig.2. GEAR HOUSING

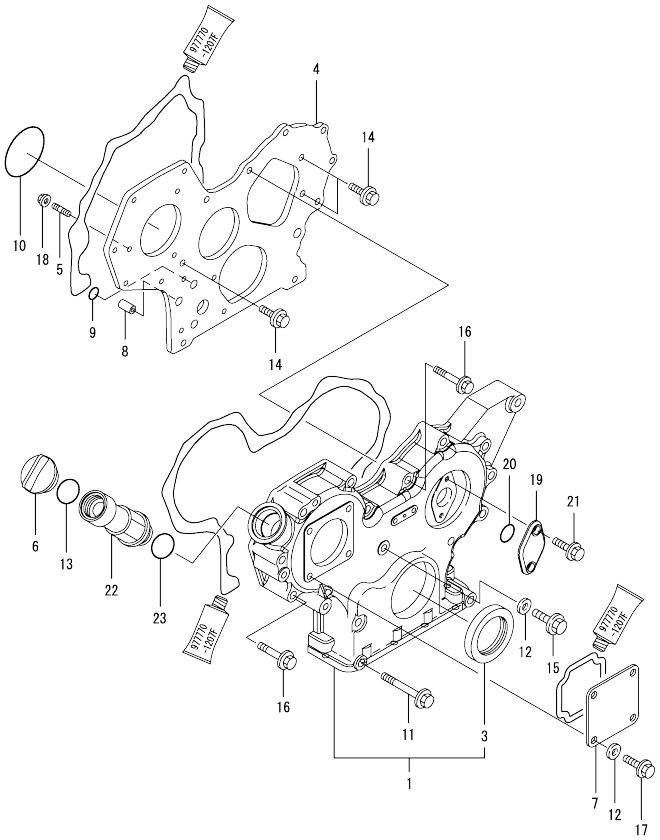

(A)=3TNV88-BSNS
(B)=
(C)=
(D)=
(E)=
(F)=

No.	Lev.	Parts No.	Description	Q'ty (A)	(B)	(C)	(D)	(E)	(F)	I	R
1	1	719803-01500	CASE ASSY, GEAR	1							
3	2	119934-01800	SEAL, OIL	1							
4	1	119803-01520	FLANGE, GEAR CASE	1							
5	1	119802-01561	STUD, M8X25	3							
6	1	124160-01751	COVER, FILLER	1							
7	1	124240-01871	COVER	1							
8	1	129795-01950	PIPE, KNOCK L=18	2							
9	1	119609-32040	O-RING, P16	2							
10	1	121850-51960	O-RING	1							
11	1	129001-91841	BOLT, M8X85	3							
12	1	22190-080002	WASHER, SEAL 6	5							
13	1	24311-000320	O-RING, 1AP32.0	1							
14	1	26106-080162	BOLT, M8X 16 PLATED	3							
15	1	26106-080302	BOLT, M8X 30 PLATED	1							
16	1	26106-080552	BOLT, M8X 55 PLATED	12							
17	1	26106-080162	BOLT, M8X 16 PLATED	4							
18	1	26306-080002	NUT, M8	3							
19	1	121023-01551	COVER	1							
20	1	24341-000240	O-RING, 1AS24.0	1							
21	1	26106-060162	BOLT, M6X 16 PLATED	2							
22	1	171031-11741	PIPE	1							
23	1	24311-000320	O-RING, 1AP32.0	1							

N:Old ◄Yes/No► New. Q:Old ◄No/Yes► New. R:Old ◄Yes/Yes► New. S:Old ◄No/No► New. W:Add. Z:Discontinued. F:Interchangeable by set. K:Q'ty Change

Copyright (C) YANMAR CO., LTD. All RightsReserved.

Fig.3. FLYWHEEL HOUSING & OIL SUMP

(A)=3TNV88-BSNS
(B)=
(C)=
(D)=
(E)=
(F)=

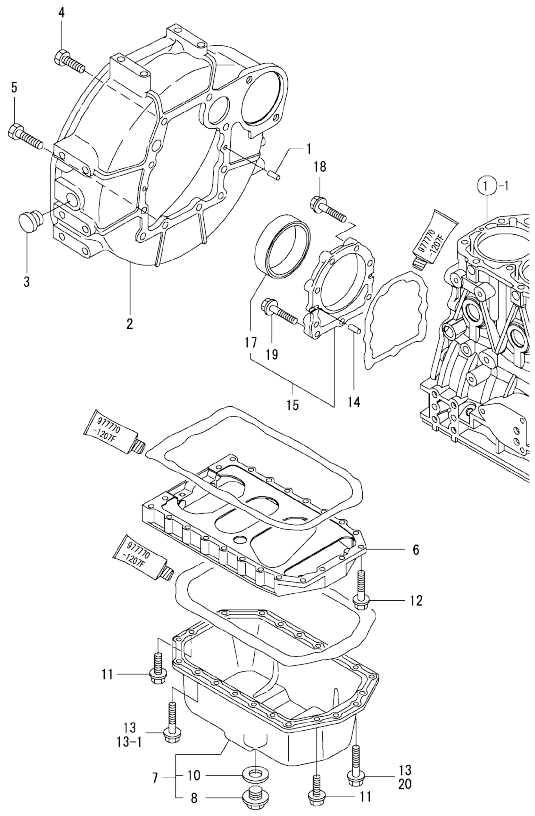

No.	Lev.	Parts No.	Description	Q'ty (A)	(B)	(C)	(D)	(E)	(F)	I	R
1	1	129100-01580	PIN, M8X16	2							
2	1	129612-01600	HOUSING, FLYWHEEL	1							
3	1	119620-01750	CAP	1							
4	1	26206-100252	BOLT, M10X 25 PLATED	6							
5	1	26206-100302	BOLT, M10X 30 PLATED	4							
6	1	129100-01730	SPACER, OIL SUMP	1							
7	1	129136-01780	SUMP ASSY, OIL	1							
8	2	119640-01640	PLUG, DRAIN M22	1							
10	2	22190-220002	WASHER, SEAL 22	1							
11	1	26106-080162	BOLT, M8X 16 PLATED	4							
12	1	26106-080252	BOLT, M8X 25 PLATED	2							
13	1	26106-080452	BOLT, M8X 45 PLATED	20							
13-1	1	26106-080452	BOLT, M8X 45 PLATED	16						K	
	(A=FROM 1ST)										
14	1	129100-01580	PIN, M8X16	2							
15	1	129100-01640	CASE ASSY, OIL SEAL	1							
17	2	129795-01780	SEAL, OIL	1							
18	1	129486-01670	BOLT, M8X30	6							
19	1	26106-080352	BOLT, M8X 35 PLATED	3							
20	1	26106-080502	BOLT, M8X 50 PLATED	4						W	
	(A=FROM 1ST)										

N:Old ◄Yes/No► New. Q:Old ◄No/Yes► New. R:Old ◄Yes/Yes► New. S:Old ◄No/No► New. W:Add. Z:Discontinued. F:Interchangeable by set. K:Q'ty Change

Copyright (C) YANMAR CO., LTD. All RightsReserved.

Fig.4. CYLINDER HEAD & BONNET

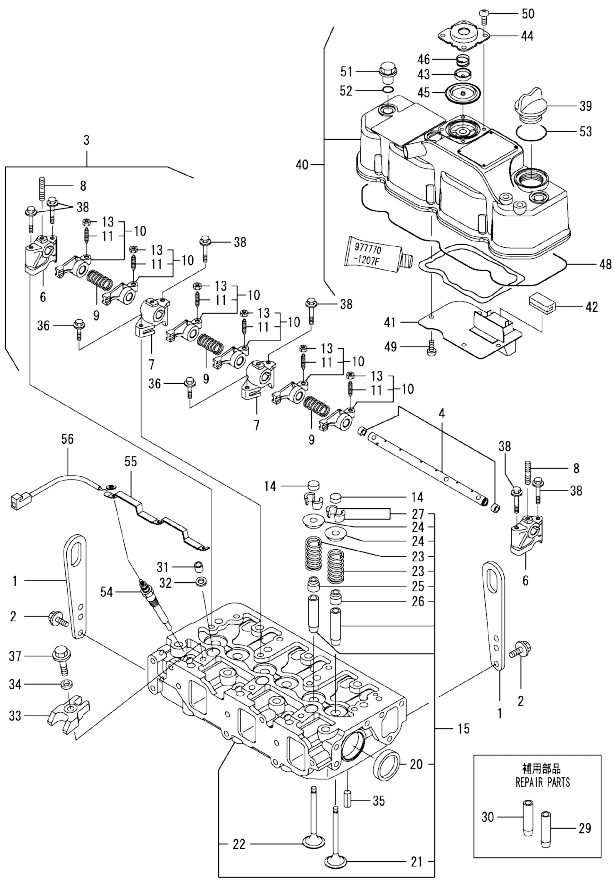

(A)=3TNV88-BSNS
(B)=
(C)=
(D)=
(E)=
(F)=

No.	Lev.	Parts No.	Description	Q'ty (A)	(B)	(C)	(D)	(E)	(F)	I	R
1	1	129900-07900	LIFTER	2							
2	1	26106-080162	BOLT, M8X 16 PLATED	4							
3	1	129004-11241	SHAFT ASSY, ROCKER	1							
4	2	129004-11251	SHAFT, ROCKER ARM	1							
6	2	119802-11260	SUPPORT, ROCKER ARM	2							
7	2	119802-11270	SUPPORT, ROCKER ARM	2							
8	2	119802-11280	STUD	3							
9	2	129150-11280	SPRING	3							
10	2	129004-11650	ARM, ROCKER	6							
11	3	129150-11230	SCREW, VALVE ADJUST	6							
13	3	129150-11750	NUT, M8	6							
14	1	129150-11370	CAP, VALVE	6							
15	1	129008-11700	HEAD ASSY, CYLINDER	1							
20	2	27241-400000	PLUG, 40	2							
21	2	129005-11100	VALVE, INTAKE	3							
22	2	129100-11112	VALVE, EXHAUST	3							
23	2	129795-11120	SPRING, VALVE	6							
24	2	129795-11180	RETAINER, SPRING	6							
25	2	121400-11340	SEAL, VALVE STEM	3							
26	2	124460-11340	SEAL, VALVE STEM	3							
27	2	27310-080001	COTTER, 8	6							
29	1	120130-11860	GUIDE, VALVE	3							1
30	1	129150-11810	GUIDE, VALVE	3							1
31	1	119802-11870	PROTECTOR, NOZZLE	3							
32	1	119625-11880	SEAT, NOZZLE	3							
33	1	129004-11900	RETAINER, NOZZLE	3							
34	1	120270-54410	WASHER, INJECTOR	3							
35	1	22351-060012	PIN, SPRING 6.0X12	2							
36	1	26106-080252	BOLT, M8X 25 PLATED	2							
37	1	26106-080352	BOLT, M8X 35 PLATED	3							
38	1	26106-080502	BOLT, M8X 50 PLATED	6							
39	1	124160-01751	COVER, FILLER	1							
40	1	129004-11350	BONNET ASSY, HEAD	1							
41	2	129004-03010	PLATE	1							
42	2	129150-03070	BAFFLE, BREATHER	1							
43	2	119802-03110	PLATE	1							
44	2	119802-03121	COVER, DIAPHRAGM	1							
45	2	119802-03130	DIAPHRAGM	1							
46	2	119802-03141	SPRING, DIAPHRAGM	1							
48	2	129004-11310	GASKET, BONNET	1							
49	2	22857-500100	SCREW, 5X10	4							
50	2	22857-500100	SCREW, 5X10	4							
51	1	124160-11360	KNOB	3							
52	1	24311-000120	O-RING, 1AP12.0	3							
53	1	24311-000320	O-RING, 1AP32.0	1							
54	1	129008-77800	PLUG, GLOW	3							
55	1	129008-77820	CONNECTOR, GLOW PLUG	1							
56	1	119803-77830	HARNESS, WIRE	1							

Remarks
(1) REPAIR PART.

N:Old $\frac{\text{Yes}}{\text{No}}$ New. Q:Old $\frac{\text{No}}{\text{Yes}}$ New. R:Old $\frac{\text{Yes}}{\text{Yes}}$ New. S:Old $\frac{\text{No}}{\text{No}}$ New. W:Add. Z:Discontinued. F:Interchangeable by set. K:Q'ty Change

Copyright (C) YANMAR CO., LTD. All RightsReserved.

Fig.5. SUCTION MANIFOLD

(A)=3TNV88-BSNS
(B)=
(C)=
(D)=
(E)=
(F)=

No.	Lev.	Parts No.	Description	Q'ty (A)	(B)	(C)	(D)	(E)	(F)	I	R
1	1	129005-03080	PIPE , BREATHER	1							
2	2	129410-03990	CLAMP 22	2							
3	1	129005-12100	MANIFOLD, AIR INTAKE	1							
4	1	129001-12110	GASKET, MANIFOLD	1							
5	1	26106-080202	BOLT, M8X 20 PLATED	4							
6	1	26106-080802	BOLT, M8X 80 PLATED	1							
7	1	129150-77511	GASKET	1							
8	1	129486-12581	JOINT, MANIFOLD	1							
9	1	26106-080202	BOLT, M8X 20 PLATED	4							

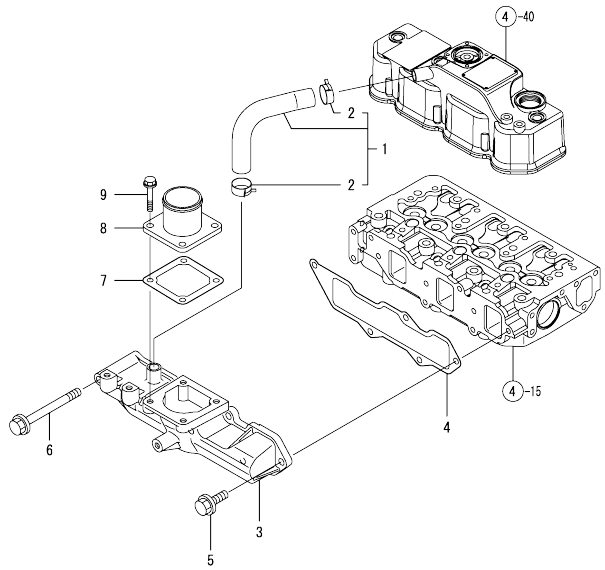

N:Old ←Yes/No→ New. Q:Old ←No/Yes→ New. R:Old ←Yes/Yes→ New. S:Old ←No/No→ New. W:Add. Z:Discontinued. F:Interchangeable by set. K:Q'ty Change

Copyright (C) YANMAR CO., LTD. All RightsReserved.

Fig.6. EXHAUST MANIFOLD

(A)=3TNV88-BSNS
(B)=
(C)=
(D)=
(E)=
(F)=

No.	Lev.	Parts No.	Description	Q'ty (A)	(B)	(C)	(D)	(E)	(F)	I	R
1	1	171350-13100	MANIFOLD, EXHAUST	1							
2	1	129150-13110	GASKET	1							
3	1	123900-13630	BOLT, M8X80	4							
4	1	119131-18320	STUD, M8X22	4							
5	1	123900-13610	STUD, M8X80	2							
6	1	26306-080002	NUT, M8	2							
7	1	129004-13200	GASKET, SILENCER	1							

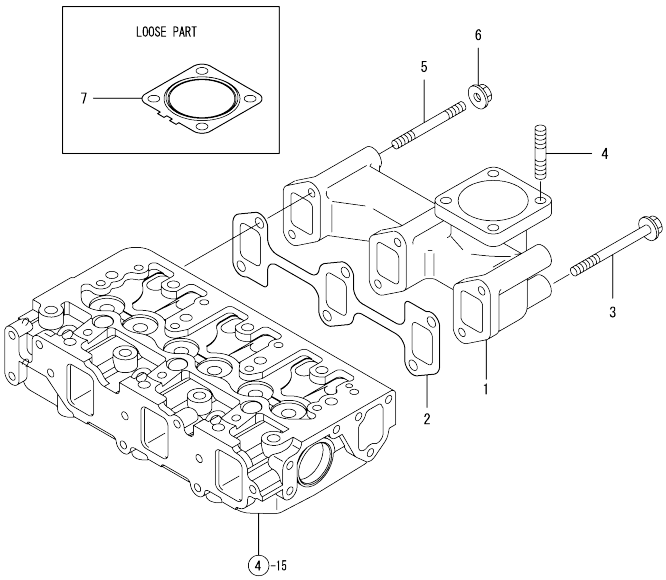

N:Old ←Yes/No→ New. Q:Old ←No/Yes→ New. R:Old ←Yes/Yes→ New. S:Old ←No/No→ New. W:Add. Z:Discontinued. F:Interchangeable by set. K:Q'ty Change

Copyright (C) YANMAR CO., LTD. All RightsReserved.

Fig.7. CAMSHAFT & DRIVING GEAR

(A)=3TNV88-BSNS
(B)=
(C)=
(D)=
(E)=
(F)=

No.	Lev.	Parts No.	Description	Q'ty (A)	(B)	(C)	(D)	(E)	(F)	I	R
1	1	129150-14200	TAPPET	6							
2	1	129150-14400	ROD, PUSH L=178	6							
3	1	129129-14580	CAMSHAFT ASSY	1							
4	2	129150-02450	BEARING, THRUST	1							
6	2	129150-14101	GEAR, CAMSHAFT	1							
7	2	22512-070140	KEY, 7X 14	1							
8	1	26106-080142	BOLT, M8X 14 PLATED	2							
9	1	119803-25050	SHAFT, IDLE	1							
10	1	119802-25101	GEAR ASSY, IDLE	1							
13	1	119802-25071	BUSH, IDLE GEAR	1							1
14	1	26106-080402	BOLT, M8X 40 PLATED	3							
15	1	129150-25301	BOLT	4							
16	1	119802-25901	GEAR, PUMP	1							
17	1	158552-51151	FLANGE	1							
18	1	22217-140000	WASHER, SPRING 14	1							
19	1	26776-140002	NUT, LOCK M14	1							

Remarks
(1) REPAIR PART.

N:Old ←Yes/No→ New. Q:Old ←No/Yes→ New. R:Old ←Yes/Yes→ New. S:Old ←No/No→ New. W:Add. Z:Discontinued. F:Interchangeable by set. K:Q'ty Change

Copyright (C) YANMAR CO., LTD. All RightsReserved.

Fig.8. CRANKSHAFT & PISTON

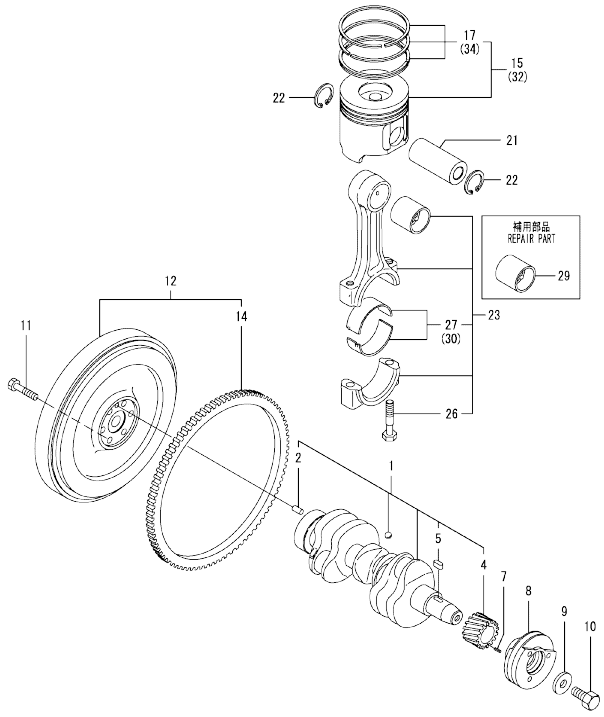

Remarks
(1) REPAIR PART.
(2) UNDER-SIZED(U.S=0.25)PART.
(3) OVER-SIZED(O.S=0.25)PART.

(A)=3TNV88-BSNS
(B)=
(C)=
(D)=
(E)=
(F)=

No.	Lev.	Parts No.	Description	Q'ty (A)	(B)	(C)	(D)	(E)	(F)	I	R
1	1	129008-21000	CRANKSHAFT ASSY	1							
2	2	129100-01580	PIN, M8X16	1							
4	2	119803-21200	GEAR, CRANKSHAFT	1							
5	2	22512-070140	KEY, 7X 14	1							
7	1	22351-030010	PIN, SPRING 3.0X10	1							
8	1	129004-21650	V-PULLEY, 110	1							
9	1	129795-21661	WASHER	1							
10	1	121850-21680	BOLT	1							
11	1	121111-21501	BOLT, FLYWHEEL	6							
12	1	129030-21590	FLYWHEEL ASSY	1							
14	2	119865-21600	GEAR, RING	1							
15	1	129005-22080	PISTON ASSY	3							
17	2	129005-22500	RING SET, PISTON	3							
21	1	129202-22300	PIN, PISTON D26 L70	3							
22	1	22252-000260	RING, 26	6							
23	1	729402-23100	ROD ASSY, CONNECTING	3							
26	2	121550-23200	BOLT, CONNECTING ROD	6							
27	2	129150-23601	BEARING, CRANK PIN	3							
29	1	129100-23910	BEARING, PISTON PIN	3							1
30	1	129150-23611	BEARING, 0.25 US	3							2
32	1	129005-22900	PISTON ASSY, 0.25 OS	3							3
34	2	129005-22950	RING SET, 0.25 OS	3							3

N:Old ←Yes/No→ New. Q:Old ←No/Yes→ New. R:Old ←Yes/Yes→ New. S:Old ←No/No→ New. W:Add. Z:Discontinued. F:Interchangeable by set. K:Q'ty Change

Copyright (C) YANMAR CO., LTD. All RightsReserved.

Fig.9. LUB.OIL SYSTEM

(A)=3TNV88-BSNS
(B)=
(C)=
(D)=
(E)=
(F)=

No.	Lev.	Parts No.	Description	Q'ty (A)	(B)	(C)	(D)	(E)	(F)	I	R
1	1	129001-32001	PUMP ASSY, OIL	1							
14	1	129150-32020	GASKET, PUMP	1							
15	1	26450-060252	BOLT, M6X 25	4							
16	1	129004-34802	DIPSTICK, OIL	1							
17	1	121520-34810	GUIDE, DIPSTICK	1							
18	1	129150-35042	GASKET	1							
19	1	129100-35301	PIPE ASSY, OIL INLET	1							
20	1	26106-080352	BOLT, M8X 35 PLATED	2							
21	1	119802-35100	BRACKET ASSY, FILTER	1							
23	2	129100-35140	STUD	1							
24	1	129150-35111	GASKET	1							
25	1	119005-35151	FILTER, D80X100L	1							1
26	1	26106-080202	BOLT, M8X 20 PLATED	3							
27	1	121252-39450	SWITCH, 0.5KG	1							
28	1	124160-39140	BOLT, PIPE JOINT M10	1							
29	1	119802-39450	PIPE ASSY, OIL	1							
30	1	129005-59830	BOLT ASSY, JOINT M8	1							
31	2	22190-080002	WASHER, SEAL 6	1							
32	2	23857-030000	BOLT, JOINT 3	1							
33	1	22190-080002	WASHER, SEAL 6	1							
34	1	22190-100002	WASHER, SEAL 10	2							
35	1	26366-060002	NUT, M6	1							

Remarks
(1) REPAIR PART.

N:Old $\frac{\text{Yes}}{\text{No}}$ New. Q:Old $\frac{\text{No}}{\text{Yes}}$ New. R:Old $\frac{\text{Yes}}{\text{Yes}}$ New. S:Old $\frac{\text{No}}{\text{No}}$ New. W:Add. Z:Discontinued. F:Interchangeable by set. K:Q'ty Change

Copyright (C) YANMAR CO., LTD. All RightsReserved.

Fig.10. COOLING WATER SYSTEM

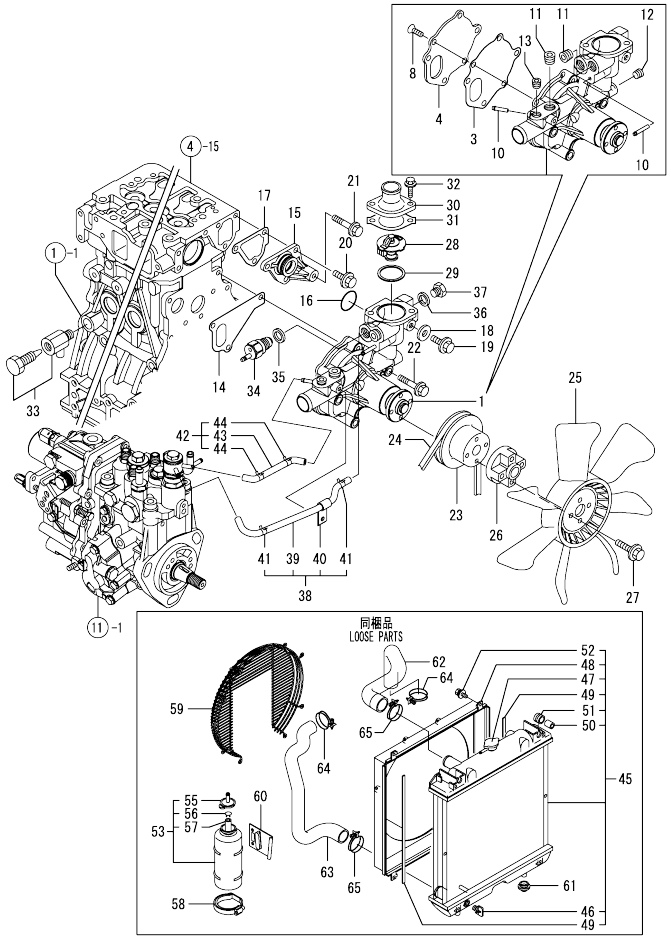

(A)=3TNV88-BSNS
(B)=
(C)=
(D)=
(E)=
(F)=

No.	Lev.	Parts No.	Description	Q'ty (A)	(B)	(C)	(D)	(E)	(F)	I	R
1	1	129004-42001	PUMP ASSY, WATER	1							
3	2	129100-42051	GASKET, WATER PUMP	1							
4	2	129100-42121	PLATE	1							
8	2	121850-42410	SCREW	3							
10	2	119802-49113	JOINT, PIPE	2							
11	2	129916-49740	PLUG, R03	2							
12	2	23876-010000	PLUG, R01	1							
13	2	23876-020000	PLUG, R02	1							
14	1	129486-42021	GASKET, WATER PUMP	1							
15	1	129004-42040	JOINT	1							
16	1	129486-42140	O-RING, G30	1							
17	1	124395-49840	GASKET	1							
18	1	23414-080000	GASKET, 8X1.0	1							
19	1	26106-080122	BOLT, M8X 12 PLATED	1							
20	1	26106-080162	BOLT, M8X 16 PLATED	3							
21	1	26106-080452	BOLT, M8X 45 PLATED	1							
22	1	26106-080602	BOLT, M8X 60 PLATED	3							
23	1	129556-42350	V-PULLEY, 96	1							
24	1	25152-003800	V-BELT, A38	1							
25	1	129655-44740	FAN, COOLING D380	1							
26	1	171353-44760	SPACER, FAN	1							
27	1	26106-060402	BOLT, M6X 40 PLATED	4							
28	1	129155-49801	THERMOSTAT, 71	1							
29	1	129150-49811	GASKET, THERMOSTAT	1							
30	1	129350-49530	COVER, THERMOSTAT	1							
31	1	129795-49551	GASKET	1							
32	1	26106-080222	BOLT, M8X 22 PLATED	2							
33	1	119620-49290	COCK ASSY, 1/4	1							
34	1	121250-44901	SWITCH, 110	1							
35	1	124465-44950	GASKET, 16	1							
36	1	124465-44950	GASKET, 16	1							
37	1	121450-42450	PLUG, M16	1							
38	1	129004-49610	PIPE ASSY, WATER	1							
39	2	129004-49711	PIPE ASSY, WATER	1							
40	2	119802-49730	RETAINER, PIPE	1							
41	2	124722-59050	CLIP, HOSE 9	2							
42	1	129004-49620	PIPE ASSY, WATER	1							
43	2	129004-49721	PIPE ASSY, WATER	1							
44	2	124722-59050	CLIP, HOSE 9	2							
45	1	129601-44500	RADIATOR ASSY	1							
46	2	129508-44550	COCK ASSY	1							
47	2	129107-44590	CAP, RADIATOR	1							
48	2	129601-44600	SHROUD	1							
49	2	129601-44610	GASKET	2							
50	2	118400-44670	COLLAR	2							
51	2	118400-44720	MOUNT, RUBBER	2							
52	2	26014-060122	BOLT, M6X 12	4							
53	1	124450-44510	TANK ASSY, SUB	1							
55	2	124450-44530	CAP	1							
56	2	124450-44560	RETAINER	1							
57	2	23061-070230	PIPE, 7X 230	1							

N:Old ←Yes/No→ New. Q:Old ←No/Yes→ New. R:Old ←Yes/Yes→ New. S:Old ←No/No→ New. W:Add. Z:Discontinued. F:Interchangeable by set. K:Q'ty Change

++ CONTINUE ++

Copyright (C) YANMAR CO., LTD. All RightsReserved.

Fig.10. COOLING WATER SYSTEM

(A)=3TNV88-BSNS
(B)=
(C)=
(D)=
(E)=
(F)=

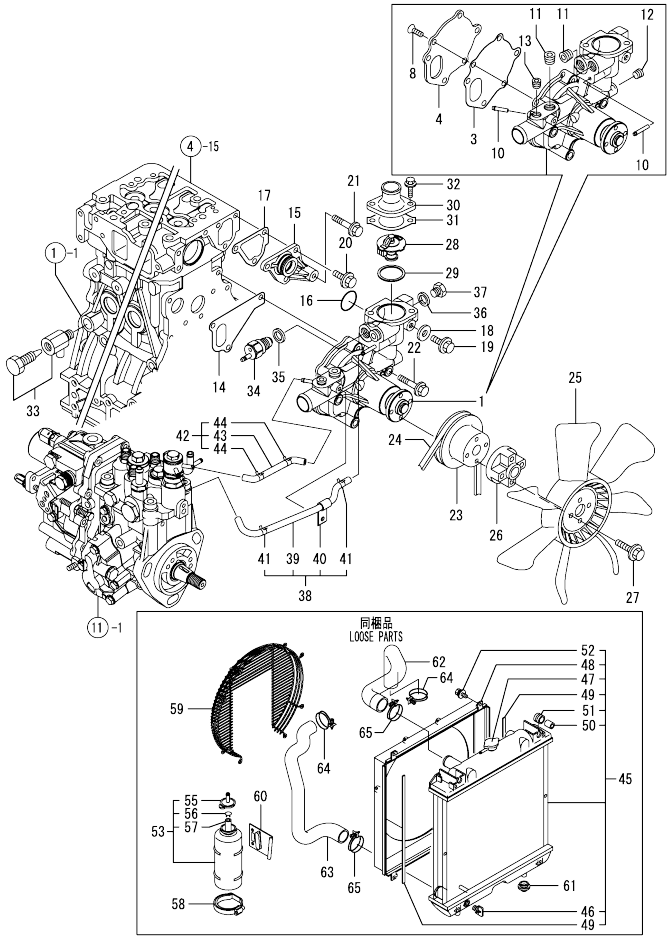

No.	Lev.	Parts No.	Description	Q'ty (A)	(B)	(C)	(D)	(E)	(F)	I	R
58	1	124450-44550	BAND	1							
59	1	129601-44560	GUARD	1							
60	1	121256-44600	BRACKET, SUB TANK	1							
61	1	119255-44660	ABSORBER	2							
62	1	129602-49010	PIPE, WATER	1							
63	1	129612-49040	PIPE, WATER	1							
64	1	23010-038000	CLAMP, 38	2							
65	1	23010-044000	CLAMP, 44	2							

N:Old ←Yes/No→ New. Q:Old ←No/Yes→ New. R:Old ←Yes/Yes→ New. S:Old ←No/No→ New. W:Add. Z:Discontinued. F:Interchangeable by set. K:Q'ty Change

Copyright (C) YANMAR CO., LTD. All RightsReserved.

Fig.11. FUEL INJECTION PUMP

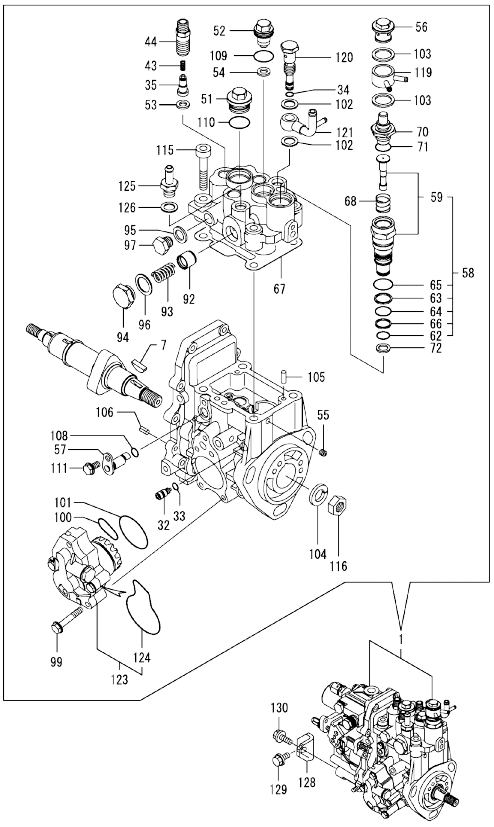

Remarks
(1) GOVERNOR ASSY(FIG.12) IS INCORPORATED IN THIS FUEL INJECTION PUMP.(REF.NO.1).

(A)=3TNV88-BSNS (D)=
(B)= (E)=
(C)= (F)=

No.	Lev.	Parts No.	Description	Q'ty (A)	(B)	(C)	(D)	(E)	(F)	I	R
1	1	729236-51330	PUMP ASSY, INJECTION	1							1
7	2	119802-51090	KEY, 4X16	1							
32	2	158600-51270	STOPPER, TAPPET	1							
33	2	158563-51281	O-RING, 4D S6	1							
34	2	158563-51281	O-RING, 4D S6	1							
35	2	129008-51300	VALVE ASSY, DELIVERY	3							
43	2	158563-51330	SPRING, DELIVERY	3							
44	2	129008-51340	HOLDER, DELIVERY	3							
51	2	158601-51550	PLUG	1							
52	2	119802-51560	PLUG, BARREL	1							
53	2	158552-51570	GASKET	3							
54	2	158552-51570	GASKET	1							
55	2	158557-51570	PLUG	1							
56	2	158601-51570	PLUG	1							
57	2	158552-51580	LIFTER	1							
58	2	119802-51590	TIMER SET	1							
59	3	119802-51600	TIMER ASSY	1							
62	3	158553-51670	O-RING, 1011	1							
63	3	119802-51680	RING, BACK UP	1							
64	3	119802-51690	O-RING	1							
65	3	24356-010200	O-RING, 4D1020	1							
66	3	24372-000150	RING, BACK UP T2P15	1							
67	2	158552-51600	GASKET	1							
68	2	158553-51630	SPRING, TIMER	1							
70	2	158553-51640	ELEMENT	1							
71	2	158553-51660	O-RING, P14	1							
72	2	158553-51680	GASKET	1							
92	2	158601-51770	PISTON	1							
93	2	158552-51781	SPRING	1							
94	2	158601-51790	PLUG	1							
95	2	22190-120002	WASHER, SEAL 12	1							
96	2	22190-180002	WASHER, SEAL 18	1							
97	2	23887-120002	PLUG, 12	1							
99	2	158553-51770	BOLT	4							
100	2	158552-52310	O-RING	1							
101	2	158552-52400	O-RING, 4E S42	1							
102	2	22190-120002	WASHER, SEAL 12	2							
103	2	22190-180002	WASHER, SEAL 18	2							
104	2	22217-140000	WASHER, SPRING 14	1							
105	2	22312-050140	PIN, PARALLEL M5X14	2							
106	2	22351-050010	PIN, SPRING 5.0X10	2							
108	2	24311-000070	O-RING, 1AP7.0	1							
109	2	24356-010180	O-RING, 4D1018	1							
110	2	24356-010200	O-RING, 4D1020	1							
111	2	26106-060102	BOLT, M6X 10 PLATED	1							
115	2	26450-080452	BOLT, M8X 45	4							
116	2	26776-140002	NUT, LOCK M14	1							
119	2	158553-51551	JOINT	1							
120	2	158601-51650	JOINT, OVER FLOW	1							
121	2	158552-51670	JOINT, OVER FLOW	1							
123	2	158552-52100	PUMP ASSY, FUEL FEED	1							

N:Old ←Yes/No→ New. Q:Old ←No/Yes→ New. R:Old ←Yes/Yes→ New. S:Old ←No/No→ New. W:Add. Z:Discontinued. F:Interchangeable by set. K:Q'ty Change

++ CONTINUE ++

Copyright (C) YANMAR CO., LTD. All RightsReserved.

Fig.11. FUEL INJECTION PUMP

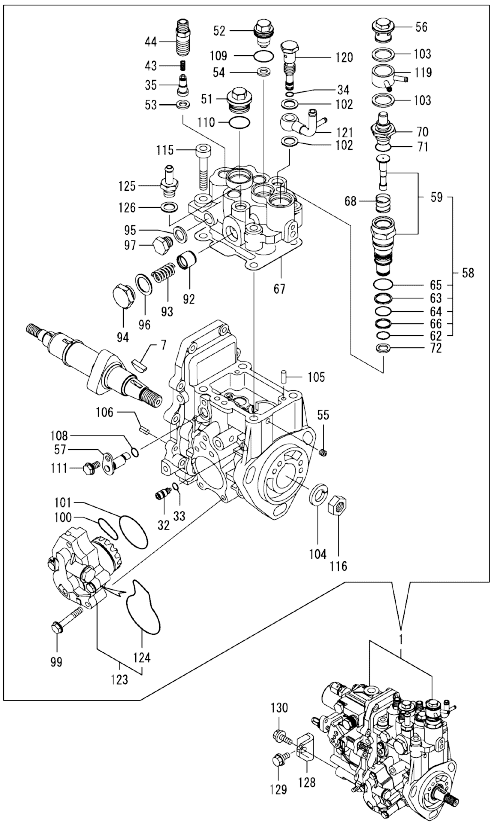

Remarks
(1) GOVERNOR ASSY(FIG.12) IS INCORPORATED IN THIS FUEL INJECTION PUMP.(REF.NO.1).

(A)=3TNV88-BSNS (D)=
(B)= (E)=
(C)= (F)=

No.	Lev.	Parts No.	Description	Q'ty (A)	(B)	(C)	(D)	(E)	(F)	I	R
124	3	158552-52500	O-RING	1							
125	2	119934-59910	JOINT, PIPE	1							
126	2	22190-120002	WASHER, SEAL 12	1							
128	1	119802-51250	RETAINER, PUMP	1							
129	1	26106-080162	BOLT, M8X 16 PLATED	1							
130	1	26106-080202	BOLT, M8X 20 PLATED	1							

N:Old ←Yes/No→ New. Q:Old ←No/Yes→ New. R:Old ←Yes/Yes→ New. S:Old ←No/No→ New. W:Add. Z:Discontinued. F:Interchangeable by set. K:Q'ty Change

Copyright (C) YANMAR CO., LTD. All RightsReserved.

Fig.12. GOVERNOR

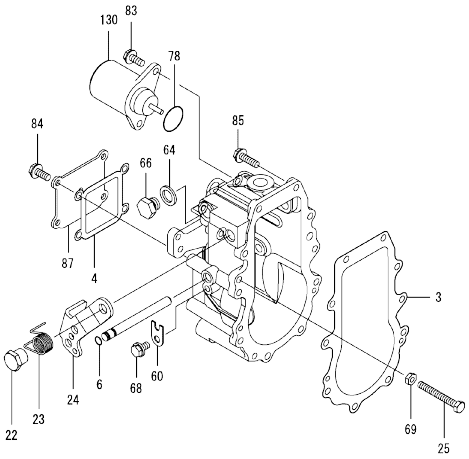

Remarks
* THIS FIGURE(GOVERNOR ASSY)IS INCORPORATED IN THE FUEL INJECTION PUMP ASSY(FIG.11).

(A)=3TNV88-BSNS (D)=
(B)= (E)=
(C)= (F)=

No.	Lev.	Parts No.	Description	Q'ty (A)	(B)	(C)	(D)	(E)	(F)	I	R
3	2	158553-61050	GASKET	1							
4	2	158553-61070	GASKET	1							
6	2	129155-51280	O-RING, S6	1							
22	2	129255-61410	NUT, LOCK	1							
23	2	119807-61420	SPRING, RETURN	1							
24	2	158552-61441	LEVER, REGULATOR	1							
25	2	129155-61460	BOLT, IDLE	1							
60	2	119660-61901	RETAINER, SHAFT	1							
64	2	22190-120000	WASHER, SEAL 12	1							
66	2	23887-120002	PLUG, 12	1							
68	2	26106-060102	BOLT, M6X 10 PLATED	1							
69	2	26756-060002	NUT, LOCK M6	1							
78	2	158552-61900	O-RING	1							
83	2	26106-060142	BOLT, M6X 14 PLATED	2							
84	2	26106-060142	BOLT, M6X 14 PLATED	4							
85	2	26106-060202	BOLT, M6X 20 PLATED	10							
87	2	129642-61060	COVER, GOVERNOR CASE	1							
130	2	119233-77932	SOLENOID, STOP	1							

N:Old ◄Yes/No► New. Q:Old ◄No/Yes► New. R:Old ◄Yes/Yes► New. S:Old ◄No/No► New. W:Add. Z:Discontinued. F:Interchangeable by set. K:Q'ty Change

Copyright (C) YANMAR CO., LTD. All RightsReserved.

Fig.13. FUEL INJECTION VALVE

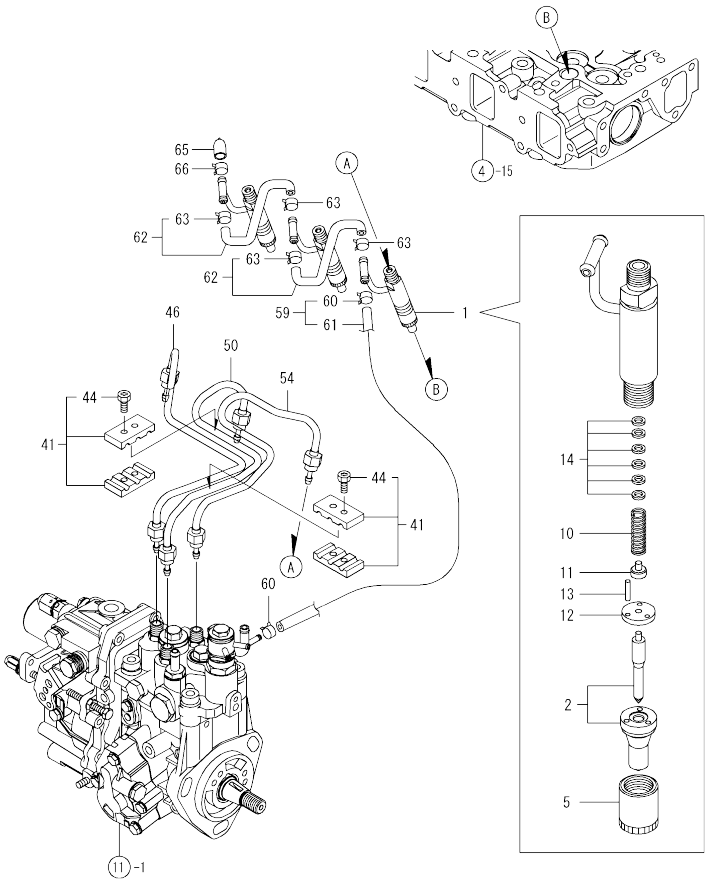

(A)=3TNV88-BSNS (D)=
(B)= (E)=
(C)= (F)=

No.	Lev.	Parts No.	Description	Q'ty (A)	(B)	(C)	(D)	(E)	(F)	I	R
1	1	729236-53100	VALVE ASSY,INJECTION	3							
2	2	129236-53000	VALVE ASSY,INJECTION	3							
5	2	114250-53080	NUT, NOZZLE D16.95	3							
10	2	114250-53120	SPRING, NOZZLE	3							
11	2	114250-53130	SEAT, SPRING	3							
12	2	114250-53140	PLATE	3							
13	2	114250-53210	PIN	6							
14	2	119803-53400	SHIM SET	3							
41	1	129150-59120	RETAINER, PIPE	2							
44	2	129150-59131	BOLT, M4X14	4							
46	1	129004-59811	PIPE ASSY, INJECTION	1							
50	1	129004-59821	PIPE ASSY, INJECTION	1							
54	1	129004-59831	PIPE ASSY, INJECTION	1							
59	1	119802-59550	PIPE ASSY, RETURN	1							
60	2	124722-59050	CLIP, HOSE 9	2							
61	2	119802-59560	PIPE, FUEL RETURN	1							
62	1	129486-59551	PIPE ASSY, RETURN	2							
63	2	124722-59050	CLIP, HOSE 9	4							
65	1	119593-59581	CAP	1							
66	1	124060-77680	CLIP, HOSE 10	1							

N:Old ←Yes/No→ New. Q:Old ←No/Yes→ New. R:Old ←Yes/Yes→ New. S:Old ←No/No→ New. W:Add. Z:Discontinued. F:Interchangeable by set. K:Q'ty Change

Copyright (C) YANMAR CO., LTD. All RightsReserved.

Fig.14. FUEL LINE

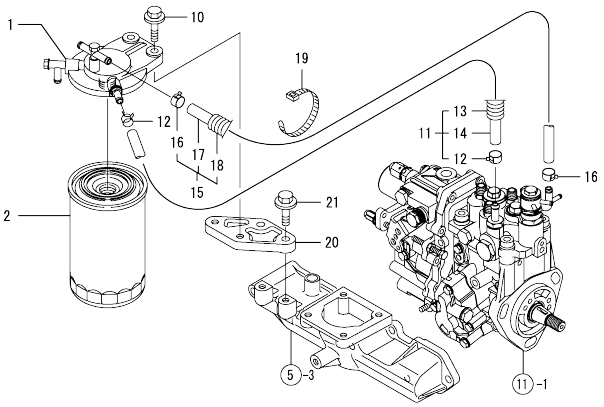

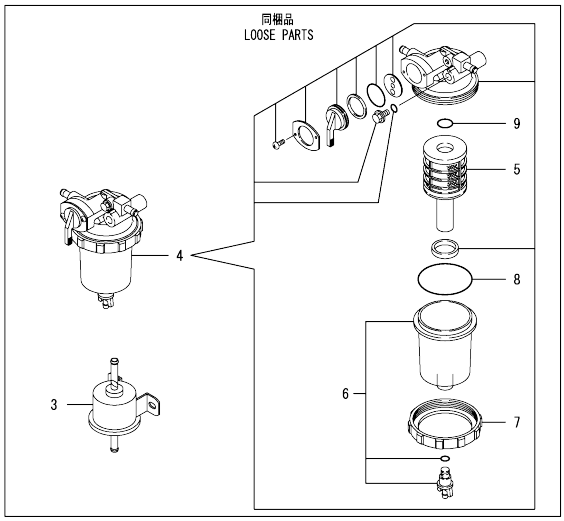

(A)=3TNV88-BSNS (D)=
(B)= (E)=
(C)= (F)=

No.	Lev.	Parts No.	Description	Q'ty (A)	(B)	(C)	(D)	(E)	(F)	I	R
1	1	129004-55612	BRACKET, FILTER	1							
2	1	129907-55801	FILTER, FUEL	1							
3	1	119225-52102	PUMP ASSY, FUEL FEED	1							
4	1	119802-55700	SEPARATOR ASSY	1							
5	2	119802-55710	ELEMENT	1							
6	2	119802-55730	CUP ASSY	1							
7	2	129100-55690	RING, RETAINING	1							
8	2	24321-000650	O-RING, 1AG65.0	1							
9	2	24311-000160	O-RING, 1AP16.0	1							
10	1	26106-080302	BOLT, M8X 30 PLATED	2							
11	1	129457-59010	PIPE ASSY, FUEL	1							
12	2	124766-59050	CLIP, HOSE 12	2							
13	2	129957-59120	TUBE, CORRUGATED	1							
14	2	105025-59750	PIPE, FUEL	1							
15	1	129961-59310	PIPE ASSY, FUEL	1							
16	2	124766-59050	CLIP, HOSE 12	2							
17	2	129136-59110	PIPE, D13/7.5X270	1							
18	2	129961-59110	TUBE, CORRUGATED	1							
19	1	121750-59890	BAND, 140	1							
20	1	119940-55690	SPACER	1							
21	1	26106-080252	BOLT, M8X 25 PLATED	2							

N:Old ←Yes/No→ New. Q:Old ←No/Yes→ New. R:Old ←Yes/Yes→ New. S:Old ←No/No→ New. W:Add. Z:Discontinued. F:Interchangeable by set. K:Q'ty Change

Copyright (C) YANMAR CO., LTD. All RightsReserved.

Fig.15. STARTING MOTOR

(A)=3TNV88-BSNS
(B)=
(C)=
(D)=
(E)=
(F)=

No.	Lev.	Parts No.	Description	Q'ty (A)	(B)	(C)	(D)	(E)	(F)	I	R
1	1	26116-120252	BOLT, M12X 25 PLATED	2							
2	1	129242-77010	STARTER	1							
3	2	129698-77020	MAGNETIC SWITCH ASSY	1							
4	2	129242-77100	ARMATURE ASSY	1							
5	2	129242-77110	YOKE ASSY	1							
6	2	129242-77120	BRUSH HOLDER ASSY	1							
7	3	129242-77130	BRUSH(-)	2							
8	3	129242-77140	BRUSH(+) SET	1							
9	3	129242-77150	BRUSH SPRING	4							
10	2	129242-77160	REAR COVER ASSY	1							
11	3	129242-77170	REAR COVER METAL	1							
12	2	118400-77170	GEAR	3							
13	2	129242-77180	CENTER BRACKET(P)	1							
14	3	129698-77190	BRACKET	1							
15	2	129698-77200	GEAR, INTERNAL	1							
16	2	129242-77210	CENTER BRACKET(A)	1							
17	2	129698-77220	PINION ASSY	1							
18	2	129698-77230	SHAFT(PINION	1							
19	2	129698-77250	WASHER SET	1							
20	2	129242-77260	GEAR CASE ASSY	1							
21	3	X2114535200	METAL, STARTER	1							
22	2	129242-77270	SHIFT LEVER SET	1							
23	2	129242-77280	DUST COVER KIT	1							
24	2	124195-77770	THROUGH BOLT	2							

N:Old ←Yes/No→ New. Q:Old ←No/Yes→ New. R:Old ←Yes/Yes→ New. S:Old ←No/No→ New. W:Add. Z:Discontinued. F:Interchangeable by set. K:Q'ty Change

Copyright (C) YANMAR CO., LTD. All RightsReserved.

Fig.16. GENERATOR

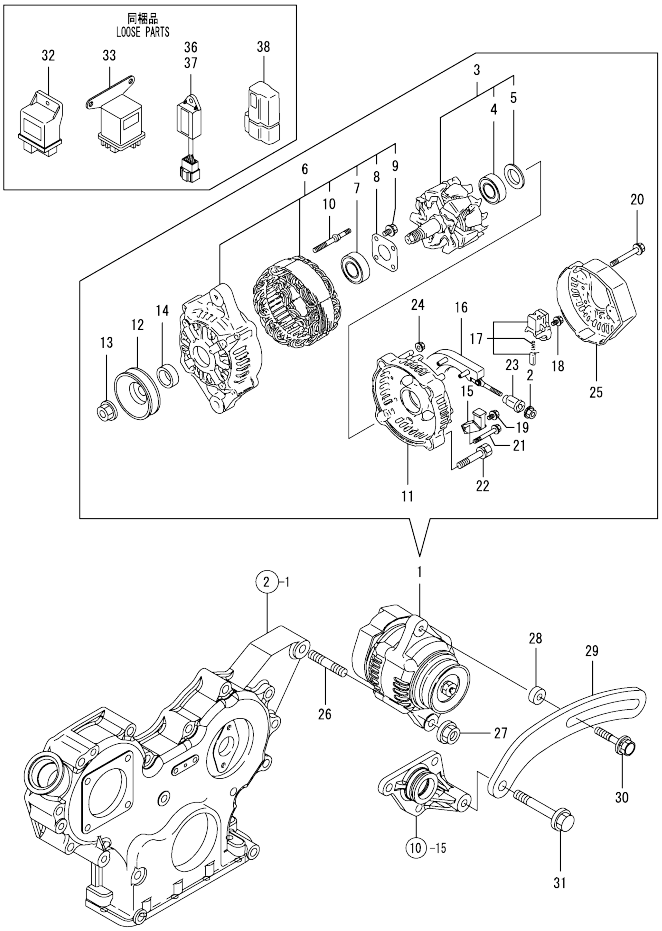

(A)=3TNV88-BSNS
(B)=
(C)=
(D)=
(E)=
(F)=

No.	Lev.	Parts No.	Description	Q'ty (A)	(B)	(C)	(D)	(E)	(F)	I	R
1	1	119626-77210	ALTERNATOR, 12V-55A	1							
2	2	X9490561001	NUT	1							
3	2	129052-77380	ROTOR ASSY	1							
4	3	125301-79240	BALL BEARING	1							
5	3	119620-79250	COVER, BEARING	1							
6	2	129052-77422	FRAME ASSY	1							
7	3	119620-79200	BALL BEARING	1							
8	3	119620-79210	PLATE	1							
9	3	119620-79220	SCREW	4							
10	3	119620-79230	BOLT, STUD	2							
11	2	128401-77440	FRAME	1							
12	2	119620-77461	PULLEY	1							
13	2	119620-77471	NUT	1							
14	2	119620-77490	COLLAR	1							
15	2	119626-77710	REGULATOR ASSY	1							
16	2	129052-79260	HOLDER	1							
17	2	129052-79270	HOLDER, BRUSH	1							
18	2	119620-79290	SCREW	6							
19	2	119620-79300	SCREW	1							
20	2	119620-79310	BOLT	3							
21	2	119620-79320	SCREW W/WASHER	2							
22	2	119620-79330	BOLT	2							
23	2	119620-79340	INSULATION BUSH	1							
24	2	119620-79350	NUT	2							
25	2	119626-77450	COVER, END, RR	1							
26	1	129795-01900	STUD	1							
27	1	26306-100002	NUT, M10	1							
28	1	119940-77270	SPACER, GENERATOR	1							
29	1	119802-77330	ADJUSTER	1							
30	1	129972-77341	BOLT, ADJUSTER L=50	1							
31	1	26106-080452	BOLT, M8X 45 PLATED	1							
32	1	119802-77200	RELAY, SAFETY	1							
33	1	119650-77910	RELAY ASSY, GLOW	1							
36	1	128300-77920	TIMER	1							
37	1	129211-77920	TIMER	1							
38	1	119643-66900	DIODE	1							

N:Old ←Yes/No→ New. Q:Old ←No/Yes→ New. R:Old ←Yes/Yes→ New. S:Old ←No/No→ New. W:Add. Z:Discontinued. F:Interchangeable by set. K:Q'ty Change

Copyright (C) YANMAR CO., LTD. All RightsReserved.

Fig.17. GASKET SET

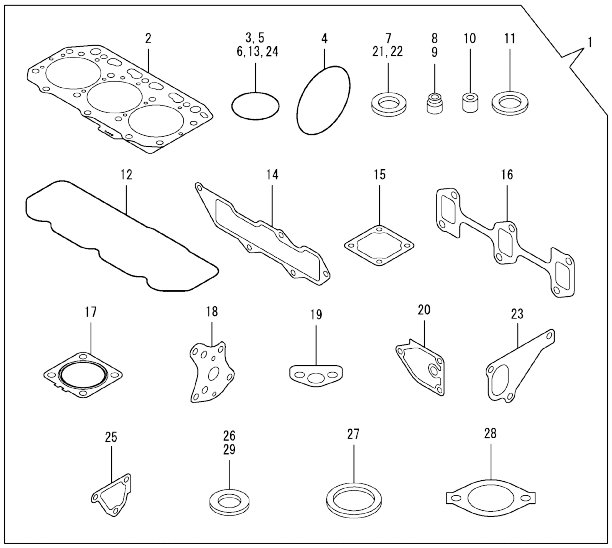

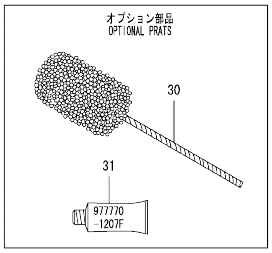

(A)=3TNV88-BSNS
(B)=
(C)=
(D)=
(E)=
(F)=

No.	Lev.	Parts No.	Description	Q'ty (A)	(B)	(C)	(D)	(E)	(F)	I	R
1	1	729005-92660	GASKET SET	1							1
2	2	129001-01340	GASKET, HEAD	1							
3	2	119609-32040	O-RING, P16	2							
4	2	121850-51960	O-RING	1							
5	2	24311-000320	O-RING, 1AP32.0	3							
6	2	24341-000240	O-RING, 1AS24.0	1							
7	2	22190-220002	WASHER, SEAL 22	1							
8	2	121400-11340	SEAL, VALVE STEM	3							
9	2	124460-11340	SEAL, VALVE STEM	3							
10	2	119802-11870	PROTECTOR, NOZZLE	3							
11	2	119625-11880	SEAT, NOZZLE	3							
12	2	129004-11310	GASKET, BONNET	1							
13	2	24311-000120	O-RING, 1AP12.0	3							
14	2	129001-12110	GASKET, MANIFOLD	1							
15	2	129150-77511	GASKET	1							
16	2	129150-13110	GASKET	1							
17	2	129004-13200	GASKET, SILENCER	1							
18	2	129150-32020	GASKET, PUMP	1							
19	2	129150-35042	GASKET	1							
20	2	129150-35111	GASKET	1							
21	2	22190-080002	WASHER, SEAL 6	2							
22	2	22190-100002	WASHER, SEAL 10	2							
23	2	129486-42021	GASKET, WATER PUMP	1							
24	2	129486-42140	O-RING, G30	1							
25	2	124395-49840	GASKET	1							
26	2	23414-080000	GASKET, 8X1.0	1							
27	2	129150-49811	GASKET, THERMOSTAT	1							
28	2	129795-49551	GASKET	1							
29	2	124465-44950	GASKET, 16	2							
30	1	129400-92430	HONE	1							1
31	1	977770-1207F	GASKET.LIQUID	1							1

Remarks
(1) OPTIONAL PART.

N:Old ←Yes/No→ New. Q:Old ←No/Yes→ New. R:Old ←Yes/Yes→ New. S:Old ←No/No→ New. W:Add. Z:Discontinued. F:Interchangeable by set. K:Q'ty Change

Copyright (C) YANMAR CO., LTD. All RightsReserved.

Parts No. Index

Parts No.	Fig. No.	Ref. No.
105025-59750	14	14
114250-53080	13	5
114250-53120	13	10
114250-53130	13	11
114250-53140	13	12
114250-53210	13	13
118400-44670	10	50
118400-44720	10	51
118400-77170	15	12
119005-35151	9	25
119131-18320	6	4
119225-52102	14	3
119233-77932	12	130
119255-44660	10	61
119593-59581	13	65
119609-32040	2	9
	17	3
119620-01750	3	3
119620-49290	10	33
119620-77461	16	12
119620-77471	16	13
119620-77490	16	14
119620-79200	16	7
119620-79210	16	8
119620-79220	16	9
119620-79230	16	10
119620-79250	16	5
119620-79290	16	18
119620-79300	16	19
119620-79310	16	20
119620-79320	16	21
119620-79330	16	22
119620-79340	16	23
119620-79350	16	24
119625-11880	4	32
	17	11
119626-77210	16	1
119626-77450	16	25
119626-77710	16	15
119640-01640	3	8
119643-66900	16	38
119650-77910	16	33
119660-61901	12	60
119802-01561	2	5
119802-03110	4	43
119802-03121	4	44
119802-03130	4	45
119802-03141	4	46
119802-11260	4	6
119802-11270	4	7

Parts No.	Fig. No.	Ref. No.
119802-11280	4	8
119802-11870	4	31
	17	10
119802-25071	7	13
119802-25101	7	10
119802-25901	7	16
119802-35100	9	21
119802-39450	9	29
119802-49113	10	10
119802-49730	10	40
119802-51090	11	7
119802-51250	11	128
119802-51560	11	52
119802-51590	11	58
119802-51600	11	59
119802-51680	11	63
119802-51690	11	64
119802-55700	14	4
119802-55710	14	5
119802-55730	14	6
119802-59550	13	59
119802-59560	13	61
119802-77200	16	32
119802-77330	16	29
119803-01520	2	4
119803-21200	8	4
119803-25050	7	9
119803-53400	13	14
119803-77830	4	56
119807-61420	12	23
119865-21600	8	14
119934-01800	2	3
119934-59910	11	125
119940-55690	14	20
119940-77270	16	28
120130-11860	4	29
120270-54410	4	34
121023-01551	2	19
121111-21501	8	11
121250-44901	10	34
121252-39450	9	27
121256-44600	10	60
121400-11340	4	25
	17	8
121450-42450	10	37
121520-34810	9	17
121550-23200	8	26
121750-59890	14	19
121850-21680	8	10
121850-42410	10	8

Parts No.	Fig. No.	Ref. No.
121850-51960	2	10
	17	4
123900-13610	6	5
123900-13630	6	3
124060-01050	1	4
124060-77680	13	66
124160-01751	2	6
	4	39
124160-01910	1	6
		7
124160-11360	4	51
124160-39140	9	28
124195-77770	15	24
124240-01871	2	7
124395-49840	10	17
	17	25
124450-44510	10	53
124450-44530	10	55
124450-44550	10	58
124450-44560	10	56
124460-11340	4	26
	17	9
124465-44950	10	35
		36
	17	29
124722-59050	10	41
		44
	13	60
		63
124766-59050	14	12
		16
125301-79240	16	4
128300-77920	16	36
128401-77440	16	11
129001-01250	1	5
129001-01340	1	28
	17	2
129001-02931	1	29
129001-12110	5	4
	17	14
129001-32001	9	1
129001-91841	2	11
129004-03010	4	41
129004-11241	4	3
129004-11251	4	4
129004-11310	4	48
	17	12
129004-11350	4	40
129004-11650	4	10
129004-11900	4	33

Parts No.	Fig. No.	Ref. No.
129004-13200	6	7
	17	17
129004-21650	8	8
129004-34802	9	16
129004-42001	10	1
129004-42040	10	15
129004-49610	10	38
129004-49620	10	42
129004-49711	10	39
129004-49721	10	43
129004-55612	14	1
129004-59811	13	46
129004-59821	13	50
129004-59831	13	54
129005-03080	5	1
129005-11100	4	21
129005-12100	5	3
129005-22080	8	15
129005-22500	8	17
129005-22900	8	32
129005-22950	8	34
129005-59830	9	30
129008-11700	4	15
129008-21000	8	1
129008-51300	11	35
129008-51340	11	44
129008-77800	4	54
129008-77820	4	55
129030-21590	8	12
129052-77380	16	3
129052-77422	16	6
129052-79260	16	16
129052-79270	16	17
129100-01580	3	1
		14
	8	2
129100-01640	3	15
129100-01730	3	6
129100-11112	4	22
129100-23910	8	29
129100-35140	9	23
129100-35301	9	19
129100-42051	10	3
129100-42121	10	4
129100-55690	14	7
129107-44590	10	47
129129-14580	7	3
129136-01780	3	7
129136-59110	14	17
129150-01200	1	27

Parts No. Index

Parts No.	Fig. No.	Ref. No.
129150-02020	1	9
129150-02450	7	4
129150-02871	1	32
129150-02931	1	24
129150-02941	1	35
129150-03070	4	42
129150-11230	4	11
129150-11280	4	9
129150-11370	4	14
129150-11750	4	13
129150-11810	4	30
129150-13110	6	2
	17	16
129150-14101	7	6
129150-14200	7	1
129150-14400	7	2
129150-23601	8	27
129150-23611	8	30
129150-25301	7	15
129150-32020	9	14
	17	18
129150-35042	9	18
	17	19
129150-35111	9	24
	17	20
129150-49811	10	29
	17	27
129150-59120	13	41
129150-59131	13	44
129150-77511	5	7
	17	15
129155-49801	10	28
129155-51280	12	6
129155-61460	12	25
129202-22300	8	21
129211-77920	16	37
129236-53000	13	2
129242-77010	15	2
129242-77100	15	4
129242-77110	15	5
129242-77120	15	6
129242-77130	15	7
129242-77140	15	8
129242-77150	15	9
129242-77160	15	10
129242-77170	15	11
129242-77180	15	13
129242-77210	15	16
129242-77260	15	20
129242-77270	15	22

Parts No.	Fig. No.	Ref. No.
129242-77280	15	23
129255-61410	12	22
129350-49530	10	30
129400-92430	17	30
129410-03990	5	2
129457-59010	14	11
129486-01670	3	18
129486-12581	5	8
129486-42021	10	14
	17	23
129486-42140	10	16
	17	24
129486-59551	13	62
129508-44550	10	46
129556-42350	10	23
129601-44500	10	45
129601-44560	10	59
129601-44600	10	48
129601-44610	10	49
129602-49010	10	62
129612-01600	3	2
129612-49040	10	63
129642-61060	12	87
129655-44740	10	25
129698-77020	15	3
129698-77190	15	14
129698-77200	15	15
129698-77220	15	17
129698-77230	15	18
129698-77250	15	19
129795-01780	3	17
129795-01900	16	26
129795-01950	2	8
129795-02412	1	12
129795-11120	4	23
129795-11180	4	24
129795-21661	8	9
129795-49551	10	31
	17	28
129900-07900	4	1
129907-55801	14	2
129916-49740	10	11
129957-59120	14	13
129961-59110	14	18
129961-59310	14	15
129972-77341	16	30
158552-51151	7	17
158552-51570	11	53
		54
158552-51580	11	57

Parts No.	Fig. No.	Ref. No.
158552-51600	11	67
158552-51670	11	121
158552-51781	11	93
158552-52100	11	123
158552-52310	11	100
158552-52400	11	101
158552-52500	11	124
158552-61441	12	24
158552-61900	12	78
158553-51551	11	119
158553-51630	11	68
158553-51640	11	70
158553-51660	11	71
158553-51670	11	62
158553-51680	11	72
158553-51770	11	99
158553-61050	12	3
158553-61070	12	4
158557-51570	11	55
158563-51281	11	33
		34
158563-51330	11	43
158600-51270	11	32
158601-51550	11	51
158601-51570	11	56
158601-51650	11	120
158601-51770	11	92
158601-51790	11	94
171031-11741	2	22
171051-01921	1	8
171350-13100	6	1
171353-44760	10	26
22190-080002	2	12
	9	31
		33
	17	21
22190-100002	9	34
	17	22
22190-120000	12	64
22190-120002	11	95
		102
		126
22190-180002	11	96
		103
22190-220002	3	10
	17	7
22217-140000	7	18
	11	104
22252-000260	8	22
22312-050140	11	105

Parts No.	Fig. No.	Ref. No.
22351-030010	8	7
22351-050010	11	106
22351-060012	4	35
22512-070140	7	7
	8	5
22857-500100	4	49
		50
23010-038000	10	64
23010-044000	10	65
23061-070230	10	57
23414-080000	10	18
	17	26
23857-030000	9	32
23876-010000	10	12
23876-020000	10	13
23887-120002	11	97
	12	66
24311-000070	11	108
24311-000120	4	52
	17	13
24311-000160	14	9
24311-000320	2	13
		23
	4	53
	17	5
24321-000650	14	8
24341-000240	2	20
	17	6
24356-010180	11	109
24356-010200	11	65
		110
24372-000150	11	66
25152-003800	10	24
26014-060122	10	52
26106-060102	11	111
	12	68
26106-060142	12	83
		84
26106-060162	2	21
26106-060202	12	85
26106-060402	10	27
26106-080122	10	19
26106-080142	7	8
26106-080162	2	14
		17
	3	11
	4	2
	10	20
	11	129
26106-080202	5	5

Parts No. Index

Parts No.	Fig. No.	Ref. No.
26106-080202	5	9
	9	26
	11	130
26106-080222	10	32
26106-080252	3	12
	4	36
	14	21
26106-080302	2	15
	14	10
26106-080352	3	19
	4	37
	9	20
26106-080402	7	14
26106-080452	3	13
		13 -1
	10	21
	16	31
26106-080502	3	20
	4	38
26106-080552	2	16
26106-080602	10	22
26106-080802	5	6
26116-120252	15	1
26206-100252	3	4
26206-100302	3	5
26306-080002	2	18
	6	6
26306-100002	16	27
26366-060002	9	35
26450-060252	9	15
26450-080452	11	115
26756-060002	12	69
26776-140002	7	19
	11	116
27241-120000	1	13
27241-300000	1	14
27241-400000	4	20
27310-080001	4	27
719803-01500	2	1
729005-01560	1	1
729005-92660	17	1
729236-51330	11	1
729236-53100	13	1
729402-23100	8	23
977770-1207F	17	31
X2114535200	15	21
X9490561001	16	2

Parts No.	Fig. No.	Ref. No.

Parts No.	Fig. No.	Ref. No.

Parts No.	Fig. No.	Ref. No.