YANMAR

PARTS CATALOG

0CW10-M14300EN

Last update Aug., 2014

PREFACE

1.This Parts Catalog carries all parts incorporated in YANMAR Model 3TNV88-GMG engine manufactured since October, 2006.

2.Each illustration corresponds to the parts list on the following page.

3.When ordering parts,clearly write down the engine model and serial number,as well as the name and number of each part in your order sheet. This will help insure reliable delivery of the parts you have ordered.

Directions for the Parts Catalog.

1.The parts stipulated in this Parts Catalog are not necessarily standard equipped parts.
2.Parts may change without prior notice.
3.The following is an example of the Parts Catalog format.

0CF10-G21601 29. FUEL INJECTION PUMP(W/BOOST)

(A)=4JH-DT
(B)=4JH-DTZ
(C)=4JH-DTZP
(D)=4JH-DTZA
(E)=4JH-DTZY
(F)=

① REF.	② LEV.	PARTS NO.	DESCRIPTION	Q'TY (A)	(B)	(C)	(D)	(E)	(F)	③ I	⑤ R
1	1	729595-51390	FUEL INJECTION PUMP	1	1	1	1	1			1
1-1	1	729595-51391	FUEL INJECTION PUMP	1	1	1	1	1		N	1
	(A=E00185)	(B=E00200)									
3	2	26022-060162	SCREW M 6X 16	9	9	9	9	9			
3-1 ④	2	26022-060162	SCREW M 6X 16	4	4	4	4	4		K	
	(A=E00156)	(B=E00156)	(C=E00156) (D=E00156)	(E=E00156)							
4	2	129470-51040	CAMSHAFT	1	1	1	1	1			
5	2	122710-51050	BEARING, ROLLER	2	2	2	2	2			
6	2	129470-51060	RETAINER	1	1	1	1	1			

Remarks
(1) BOOST COMPEMSATOR TYPE. OPTIONAL
PART, TO E00155,(4JH-DT, 4JH-DTZ

① Ref. No.

The Ref. No. listed may not be in accordance with the illustration Ref. No.

(Ex.) Illustration No. 1 List Ref No. 1 (Before change) → 1- 1 (After change)

For interchangeable symbols N, R and K, illustrations for new parts may be abbreviated.

② Lev. (Level)

Level indication
The numbers below indicate the level of relativity towards the main part.
1 ----- Main parts (Assembly parts)
2 ----- Sub component included in " 1 ".
3 ----- Sub component included in " 2 ".
Note) Parts that are not for sale are partially illustrated but not listed.

③ Interchangeability Mark

When a part change takes place, one of the following interchangeability symbols is indicated beside the part.

Symbol	Interchangeability	Contents note
N	Old ← Yes / No → New	New Part is interchangeable for Old Part but Old Part is not interchangeable for New Part.
Q	Old ← No / Yes → New	New Part is not interchangeable for Old Part but Old Part is interchangeable for New Part.
R	Old ← Yes / Yes → New	New/ Old Parts are both interchangeable.
S	Old ← No / No → New	New/ Old Parts are both not interchangeable.
W		Part newly added.
Z		Part discontinued.
F		Not interchangeable by a single part but interchangeable together with related parts.
K		Changes only for used parts quantities.

④ Effective Machine No.

When a part changes, the effective Machine No. will be indicated in the (A)-(F) column.

Product Symbol	Product No.	Product Symbol	Product No.
C	Clutch No. Compressor No.	F	Machine No. (Agricultural Equip.)
D	Drive No.	M	Machine No.
E	Engine No.		

Note 1) A date may follow the symbol. (Ex.) 1996.01
Note 2) " XXXXX " and " ZZZZZ " are for parts that could not be predicted or for engine models that could not be identified.
Note 3) (A=E00185) is the E (Engine Serial Number) for the column (A) model (in this case 4JH-DT) after the parts design change.

⑤ Remarks Mark

Figures or alphabets (symbols) are entered in the remarks column.
The comments (remarks) on parts that are indicated at the bottom of the illustration are the same symbols as those stated above.

Contents

Fig. No.	Fig. Name
3TNV88-GMG	
1.	CYLINDER BLOCK
2.	GEAR HOUSING
3.	FLYWHEEL HOUSING & OIL SUMP
4.	CYLINDER HEAD & BONNET
5.	SUCTION MANIFOLD
6.	EXHAUST MANIFOLD
7.	CAMSHAFT & DRIVING GEAR
8.	CRANKSHAFT & PISTON
9.	LUB.OIL SYSTEM
10.	COOLING WATER SYSTEM
11.	FUEL INJECTION PUMP
12.	GOVERNOR
13.	FUEL INJECTION VALVE
14.	FUEL LINE
15.	STARTING MOTOR
16.	GENERATOR
17.	GASKET SET

Fig. No.	Fig. Name

0CW10-M14300

Fig.1. CYLINDER BLOCK

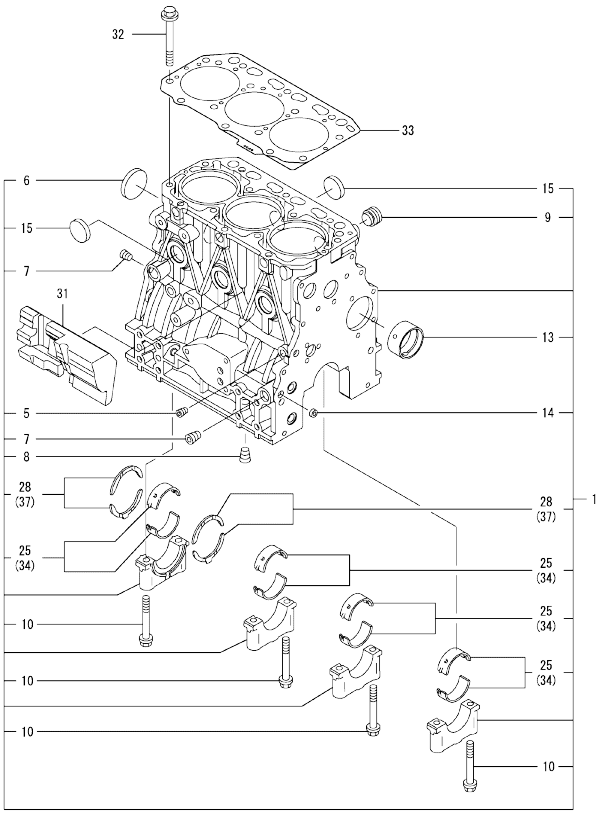

(A)=3TNV88-GMG (D)=
(B)= (E)=
(C)= (F)=

No.	Lev.	Parts No.	Description	Q'ty (A)	(B)	(C)	(D)	(E)	(F)	I	R
1	1	729005-01560	BLOCK ASSY, CYLINDER	1							
5	2	124060-01050	PLUG, PT1/8	1							
6	2	129001-01250	PLUG, 50	1							
7	2	124160-01910	PLUG, PT1/4	2							
8	2	124160-01910	PLUG, PT1/4	1							
9	2	171051-01921	PLUG, NPTF1	1							
10	2	129150-02020	BOLT, METAL CAP	8							
13	2	129795-02412	BUSH, CAMSHAFT	1							
14	2	27241-120000	PLUG, 12	2							
15	2	27241-300000	PLUG 30	6							
25	2	129001-02931	BEARING, MAIN	4							3
28	2	129150-02931	BEARING, THRUST	2							
31	1	129004-01190	SPACER	1							
32	1	129150-01200	BOLT, HEAD	14							
33	1	129001-01340	GASKET, HEAD	1							
34	1	129150-02871	BEARING, 0.25 US	4							1
37	1	129150-02941	BEARING, THRUST 0.25	1							2

Remarks
(1) UNDER-SIZE(U.S=0.25)PART.
(2) OVER-SIZE(O.S=0.25)PART.
(3) REPAIR PART.

N:Old $\frac{\text{Yes}}{\text{No}}$ New. Q:Old $\frac{\text{No}}{\text{Yes}}$ New. R:Old $\frac{\text{Yes}}{\text{Yes}}$ New. S:Old $\frac{\text{No}}{\text{No}}$ New. W:Add. Z:Discontinued. F:Interchangeable by set. K:Q'ty Change

Copyright (C) YANMAR CO., LTD. All RightsReserved.

0CW10-M14300

Fig.2. GEAR HOUSING

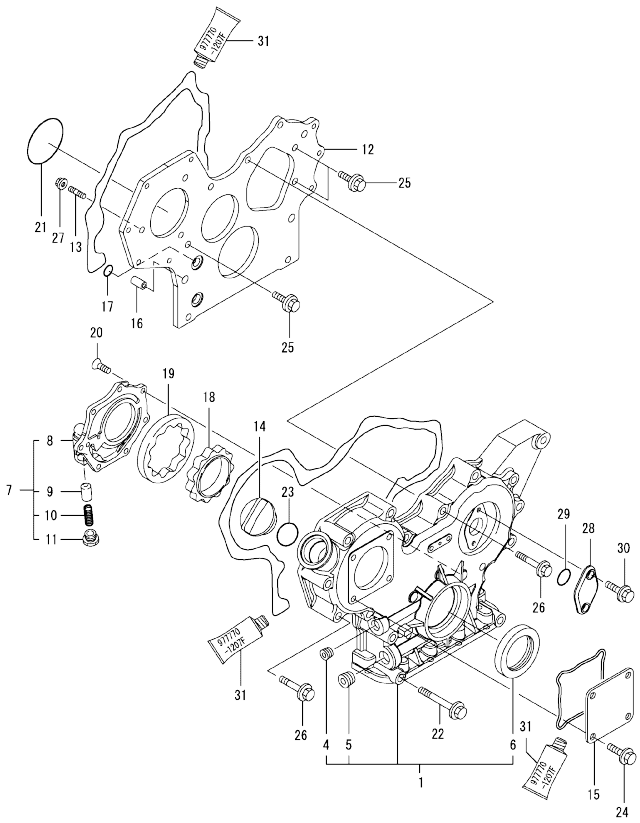

(A)=3TNV88-GMG (D)=
(B)= (E)=
(C)= (F)=

No.	Lev.	Parts No.	Description	Q'ty (A)	(B)	(C)	(D)	(E)	(F)	I	R
1	1	719802-01500	CASE ASSY, GEAR	1							
4	2	23876-030000	PLUG, R03	1							
5	2	23876-040000	PLUG, R04	1							
6	2	129795-01800	SEAL, OIL	1							
7	1	119802-32100	COVER ASSY	1							
8	2	119802-32070	COVER	1							
9	2	129900-32130	VALVE, RELIEF	1							
10	2	129418-32320	SPRING	1							
11	2	129001-32330	PLUG	1							
12	1	119802-01520	FLANGE, GEAR CASE	1							
13	1	119802-01561	STUD, M8X25	3							
14	1	124160-01751	COVER, FILLER	1							
15	1	124240-01871	COVER	1							
16	1	129795-01950	PIPE, KNOCK L=18	2							
17	1	119609-32040	O-RING, P16	4							
18	1	119802-32111	ROTOR, INNER	1							
19	1	119802-32120	ROTOR, OUTER	1							
20	1	119802-32130	SCREW, M6X16	7							
21	1	121850-51960	O-RING	1							
22	1	129001-91841	BOLT, M8X85	3							
23	1	24311-000320	O-RING, 1AP32.0	1							
24	1	26106-080162	BOLT, M8X 16 PLATED	4							
25	1	26106-080162	BOLT, M8X 16 PLATED	3							
26	1	26106-080552	BOLT, M8X 55 PLATED	12							
27	1	26306-080002	NUT, M8	3							
28	1	121023-01551	COVER	1							
29	1	24341-000240	O-RING, 1AS24.0	1							
30	1	26106-060162	BOLT, M6X 16 PLATED	2							
31	1	977770-1207F	GASKET.LIQUID	1							1

Remarks
(1) OPTIONAL PART.

N:Old $\frac{\text{Yes}}{\text{No}}$ New. Q:Old $\frac{\text{No}}{\text{Yes}}$ New. R:Old $\frac{\text{Yes}}{\text{Yes}}$ New. S:Old $\frac{\text{No}}{\text{No}}$ New. W:Add. Z:Discontinued. F:Interchangeable by set. K:Q'ty Change

Copyright (C) YANMAR CO., LTD. All RightsReserved.

0CW10-M14300

Fig.3. FLYWHEEL HOUSING & OIL SUMP

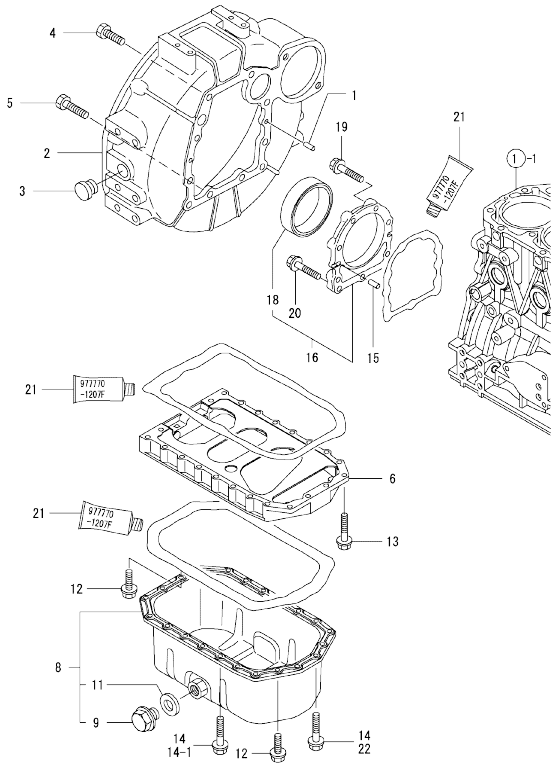

(A)=3TNV88-GMG (D)=
(B)= (E)=
(C)= (F)=

No.	Lev.	Parts No.	Description	Q'ty (A)	(B)	(C)	(D)	(E)	(F)	I	R
1	1	129100-01580	PIN, M8X16	2							
2	1	171420-01600	HOUSING, FLYWHEEL	1							
3	1	119620-01750	CAP	1							
4	1	26206-100252	BOLT, M10X 25 PLATED	6							
5	1	26206-100302	BOLT, M10X 30 PLATED	4							
6	1	129100-01730	SPACER, OIL SUMP	1							
8	1	129100-01760	SUMP ASSY, OIL	1							
9	2	119640-01640	PLUG, DRAIN M22	1							
11	2	22190-220002	WASHER, SEAL 22	1							
12	1	26106-080162	BOLT, M8X 16 PLATED	4							
13	1	26106-080252	BOLT, M8X 25 PLATED	2							
14	1	26106-080452	BOLT, M8X 45 PLATED	20							
14-1	1	26106-080452	BOLT, M8X 45 PLATED	16						K	
	(A=FROM 1ST)										
15	1	129100-01580	PIN, M8X16	2							
16	1	129100-01640	CASE ASSY, OIL SEAL	1							
18	2	129795-01780	SEAL, OIL	1							
19	1	129486-01670	BOLT, M8X30	6							
20	1	26106-080352	BOLT, M8X 35 PLATED	3							
21	1	977770-1207F	GASKET.LIQUID	1							1
22	1	26106-080502	BOLT, M8X 50 PLATED	4						W	
	(A=FROM 1ST)										

Remarks
(1) OPTIONAL PART.

N:Old ◄Yes/No► New. Q:Old ◄No/Yes► New, R:Old ◄Yes/Yes► New, S:Old ◄No/No► New. W:Add. Z:Discontinued. F:Interchangeable by set. K:Q'ty Change

Copyright (C) YANMAR CO., LTD. All RightsReserved.

0CW10-M14300

Fig.4. CYLINDER HEAD & BONNET

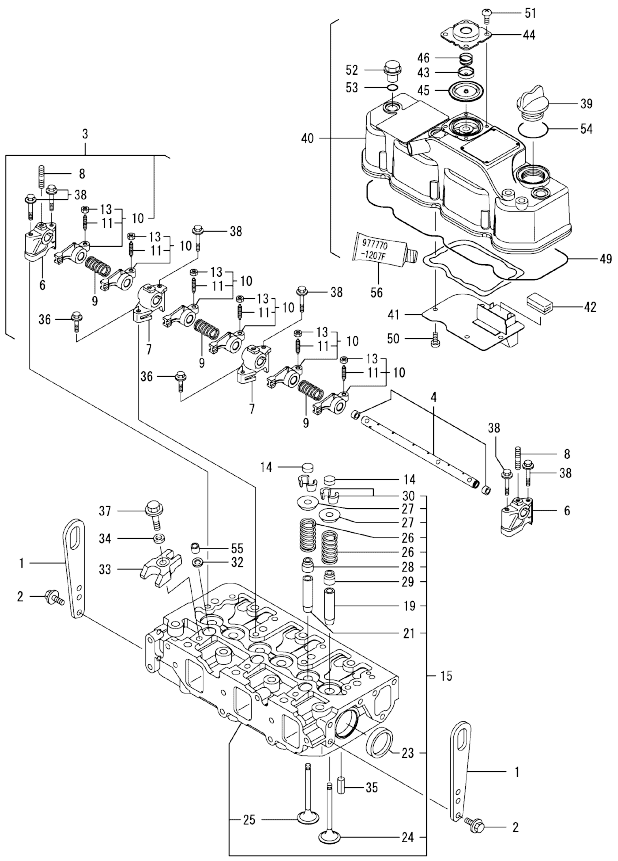

(A)=3TNV88-GMG (D)=
(B)= (E)=
(C)= (F)=

No.	Lev.	Parts No.	Description	Q'ty (A)	(B)	(C)	(D)	(E)	(F)	I	R
1	1	129900-07900	LIFTER	2							
2	1	26106-080162	BOLT, M8X 16 PLATED	4							
3	1	129004-11241	SHAFT ASSY, ROCKER	1							
4	2	129004-11251	SHAFT, ROCKER ARM	1							
6	2	119802-11260	SUPPORT, ROCKER ARM	2							
7	2	119802-11270	SUPPORT, ROCKER ARM	2							
8	2	119802-11280	STUD	3							
9	2	129150-11280	SPRING	3							
10	2	129004-11650	ARM, ROCKER	6							
11	3	129150-11230	SCREW, VALVE ADJUST	6							
13	3	129150-11750	NUT, M8	6							
14	1	129150-11370	CAP, VALVE	6							
15	1	129004-11700	HEAD ASSY, CYLINDER	1							
19	2	120130-11860	GUIDE, VALVE	3							1
21	2	129150-11810	GUIDE, VALVE	3							1
23	2	27241-400000	PLUG, 40	2							
24	2	129004-11130	VALVE, INTAKE	3							
25	2	129100-11112	VALVE, EXHAUST	3							
26	2	129795-11120	SPRING, VALVE	6							
27	2	129795-11180	RETAINER, SPRING	6							
28	2	121400-11340	SEAL, VALVE STEM	3							
29	2	124460-11340	SEAL, VALVE STEM	3							
30	2	27310-080001	COTTER, 8	6							
32	1	119625-11880	SEAT, NOZZLE	3							
33	1	129004-11900	RETAINER, NOZZLE	3							
34	1	120270-54410	WASHER, INJECTOR	3							
35	1	22351-060012	PIN, SPRING 6.0X12	2							
36	1	26106-080252	BOLT, M8X 25 PLATED	2							
37	1	26106-080352	BOLT, M8X 35 PLATED	3							
38	1	26106-080502	BOLT, M8X 50 PLATED	6							
39	1	124160-01751	COVER, FILLER	1							
40	1	129004-11350	BONNET ASSY, HEAD	1							
41	2	129004-03010	PLATE	1							
42	2	129150-03070	BAFFLE, BREATHER	1							
43	2	119802-03110	PLATE	1							
44	2	119802-03121	COVER, DIAPHRAGM	1							
45	2	119802-03130	DIAPHRAGM	1							
46	2	119802-03141	SPRING, DIAPHRAGM	1							
49	2	129004-11310	GASKET, BONNET	1							
50	2	22857-500100	SCREW, 5X10	4							
51	2	22857-500100	SCREW, 5X10	4							
52	1	124160-11360	KNOB	3							
53	1	24311-000120	O-RING, 1AP12.0	3							
54	1	24311-000320	O-RING, 1AP32.0	1							
55	1	119802-11870	PROTECTOR, NOZZLE	3							
56	1	977770-1207F	GASKET.LIQUID	1							2

Remarks
(1) REPAIR PART.
(2) OPTIONAL PART.

N:Old ←Yes/No→ New. Q:Old ←No/Yes→ New. R:Old ←Yes/Yes→ New. S:Old ←No/No→ New. W:Add. Z:Discontinued. F:Interchangeable by set. K:Q'ty Change

Copyright (C) YANMAR CO., LTD. All RightsReserved.

0CW10-M14300

Fig.5. SUCTION MANIFOLD

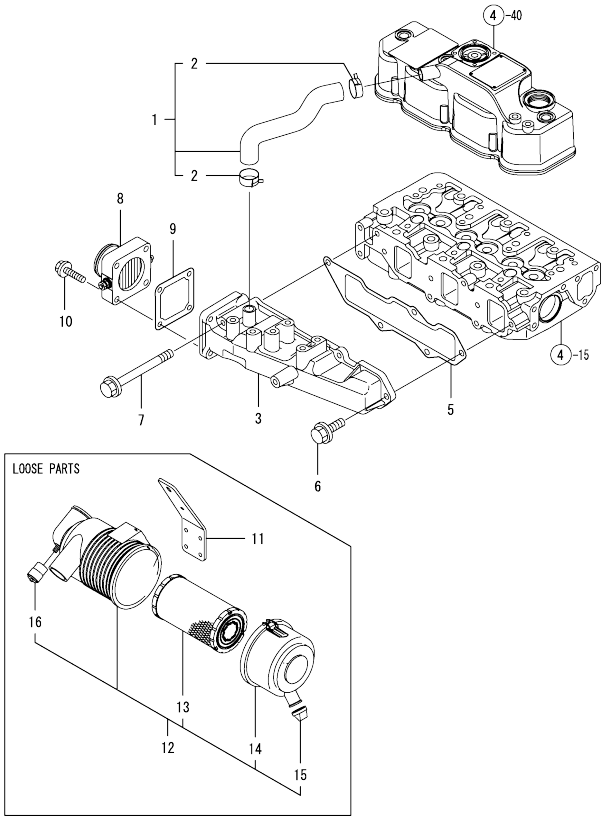

(A)=3TNV88-GMG (D)=
(B)= (E)=
(C)= (F)=

No.	Lev.	Parts No.	Description	Q'ty (A)	(B)	(C)	(D)	(E)	(F)	I	R
1	1	129004-03080	PIPE , BREATHER	1							
2	2	129410-03990	CLAMP 22	2							
3	1	129004-12100	MANIFOLD, AIR INTAKE	1							
5	1	129001-12110	GASKET, MANIFOLD	1							
6	1	26106-080202	BOLT, M8X 20 PLATED	4							
7	1	26106-080802	BOLT, M8X 80 PLATED	1							
8	1	129120-77502	HEATER	1							
9	1	129150-77511	GASKET	1							
10	1	26106-080352	BOLT, M8X 35 PLATED	4							
11	1	129647-12600	BRACKET, AIR CLEANER	1							
12	1	129247-12500	CLEANER ASSY, AIR	1							
13	2	129004-12520	ELEMENT 5INCH	1							
14	2	129012-12530	COVER ASSY	1							
15	2	119808-12540	VALVE, UNLOADER	1							
16	2	126650-12680	INDICATOR	1							

N:Old ←Yes/No→ New. Q:Old ←No/Yes→ New, R:Old ←Yes/Yes→ New, S:Old ←No/No→ New, W:Add, Z:Discontinued. F:Interchangeable by set. K:Q'ty Change

Copyright (C) YANMAR CO., LTD. All RightsReserved.

0CW10-M14300

Fig.6. EXHAUST MANIFOLD

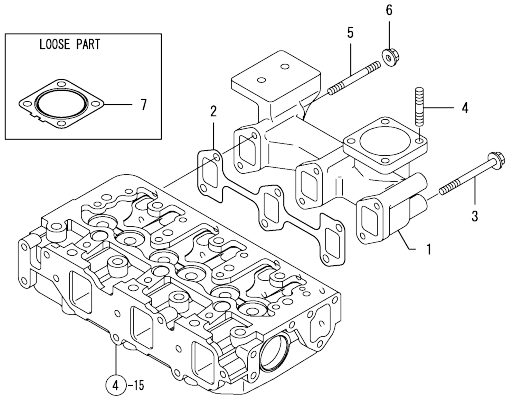

(A)=3TNV88-GMG (D)=
(B)= (E)=
(C)= (F)=

No.	Lev.	Parts No.	Description	Q'ty (A)	(B)	(C)	(D)	(E)	(F)	I	R
1	1	129004-13109	MANIFOLD, EXHAUST	1							
2	1	129150-13110	GASKET	1							
3	1	123900-13630	BOLT, M8X80	4							
4	1	119131-18320	STUD, M8X22	4							
5	1	123900-13610	STUD, M8X80	2							
6	1	26306-080002	NUT, M8	2							
7	1	129004-13200	GASKET, SILENCER	1							

N:Old ◄Yes/No► New. Q:Old ◄No/Yes► New. R:Old ◄Yes/Yes► New. S:Old ◄No/No► New. W:Add. Z:Discontinued. F:Interchangeable by set. K:Q'ty Change

Copyright (C) YANMAR CO., LTD. All RightsReserved.

0CW10-M14300

Fig.7. CAMSHAFT & DRIVING GEAR

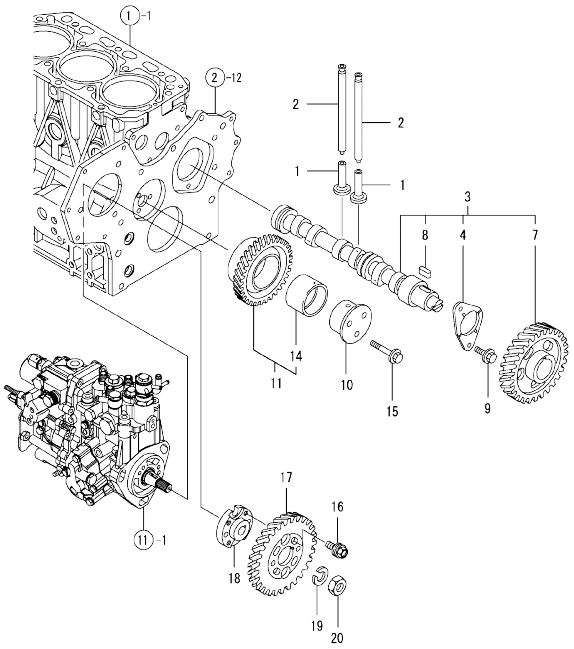

(A)=3TNV88-GMG (D)=
(B)= (E)=
(C)= (F)=

No.	Lev.	Parts No.	Description	Q'ty (A)	(B)	(C)	(D)	(E)	(F)	I	R
1	1	129150-14200	TAPPET	6							
2	1	129150-14400	ROD, PUSH L=178	6							
3	1	129004-14580	CAMSHAFT ASSY	1							
4	2	129150-02450	BEARING, THRUST	1							
7	2	129150-14101	GEAR, CAMSHAFT	1							
8	2	22512-070140	KEY, 7X 14	1							
9	1	26106-080142	BOLT, M8X 14 PLATED	2							
10	1	119802-25051	SHAFT, IDLE	1							
11	1	119802-25101	GEAR ASSY, IDLE	1							
14	2	119802-25071	BUSH, IDLE GEAR	1							1
15	1	26106-080402	BOLT, M8X 40 PLATED	3							
16	1	129150-25301	BOLT	4							
17	1	119802-25901	GEAR, PUMP	1							
18	1	158552-51151	FLANGE	1							
19	1	22217-140000	WASHER, SPRING 14	1							
20	1	26776-140002	NUT, LOCK M14	1							

Remarks
(1) REPAIR PART.

N:Old ←Yes/No→ New. Q:Old ←No/Yes→ New, R:Old ←Yes/Yes→ New, S:Old ←No/No→ New, W:Add, Z:Discontinued, F:Interchangeable by set, K:Q'ty Change

Copyright (C) YANMAR CO., LTD. All RightsReserved.

0CW10-M14300

Fig.8. CRANKSHAFT & PISTON

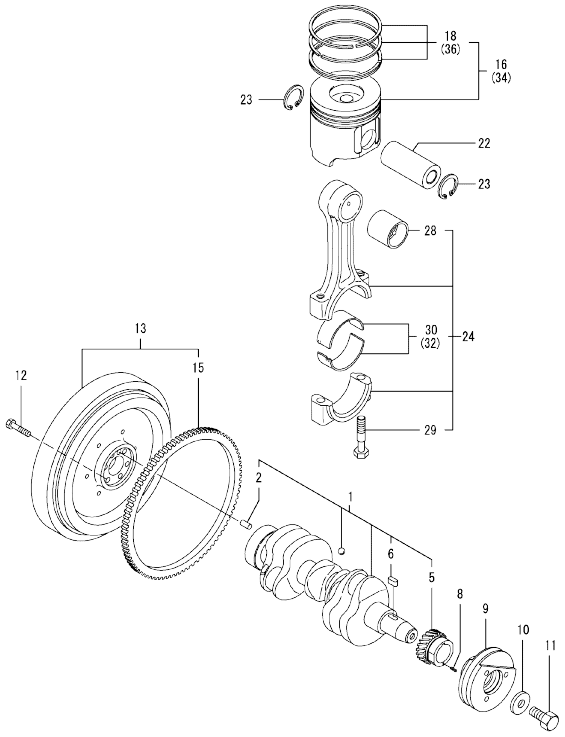

(A)=3TNV88-GMG (D)=
(B)= (E)=
(C)= (F)=

No.	Lev.	Parts No.	Description	Q'ty (A)	(B)	(C)	(D)	(E)	(F)	I	R
1	1	129004-21002	CRANKSHAFT ASSY	1							
2	2	129100-01580	PIN, M8X16	1							
5	2	119802-21202	GEAR, CRANKSHAFT	1							
6	2	22512-070140	KEY, 7X 14	1							
8	1	22351-030010	PIN, SPRING 3.0X10	1							
9	1	129005-21650	V-PULLEY, 120	1							
10	1	129795-21661	WASHER	1							
11	1	121850-21680	BOLT	1							
12	1	121111-21501	BOLT, FLYWHEEL	6							
13	1	171340-21590	FLYWHEEL ASSY	1							
15	2	124550-21600	GEAR, RING	1							
16	1	129005-22080	PISTON ASSY	3							
18	2	129005-22500	RING SET, PISTON	3							
22	1	129202-22300	PIN, PISTON D26 L70	3							
23	1	22252-000260	RING, 26	6							
24	1	729402-23100	ROD ASSY, CONNECTING	3							
28	2	129100-23910	BEARING, PISTON PIN	3							1
29	2	121550-23200	BOLT, CONNECTING ROD	6							
30	2	129150-23601	BEARING, CRANK PIN	3							
32	1	129150-23611	BEARING, 0.25 US	3							2
34	1	129005-22900	PISTON ASSY, 0.25 OS	3							3
36	2	129005-22950	RING SET, 0.25 OS	3							3

Remarks
(1) REPAIR PART.
(2) UNDER-SIZE(U.S=0.25)PART.
(3) OVER-SIZE(O.S=0.25)PART.

N:Old ◄Yes/No► New. Q:Old ◄No/Yes► New, R:Old ◄Yes/Yes► New, S:Old ◄No/No► New, W:Add, Z:Discontinued, F:Interchangeable by set, K:Q'ty Change

Copyright (C) YANMAR CO., LTD. All RightsReserved.

0CW10-M14300

Fig.9. LUB.OIL SYSTEM

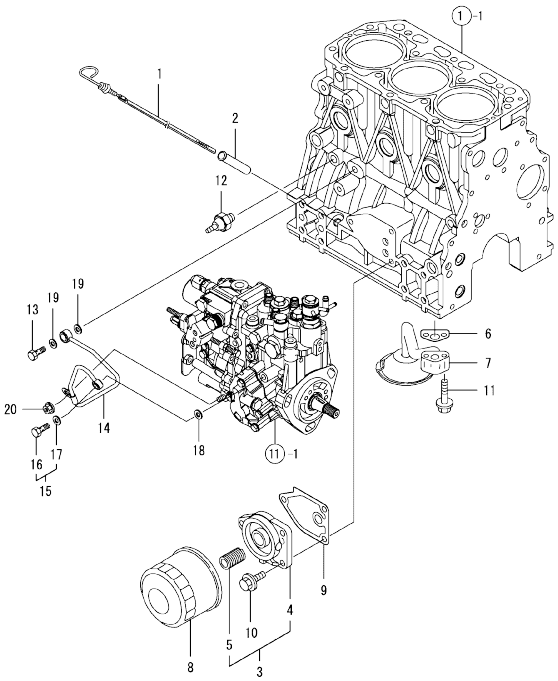

(A)=3TNV88-GMG
(B)=
(C)=
(D)=
(E)=
(F)=

No.	Lev.	Parts No.	Description	Q'ty (A)	(B)	(C)	(D)	(E)	(F)	I	R
1	1	129004-34802	DIPSTICK, OIL	1							
2	1	121520-34810	GUIDE, DIPSTICK	1							
3	1	119802-35100	BRACKET ASSY, FILTER	1							
4	2	119802-35110	BRACKET, FILTER	1							
5	2	129100-35140	STUD	1							
6	1	129150-35042	GASKET	1							
7	1	129100-35301	PIPE ASSY, OIL INLET	1							
8	1	129150-35153	FILTER 80X80L	1							1
9	1	129150-35111	GASKET	1							
10	1	26106-080202	BOLT, M8X 20 PLATED	3							
11	1	26106-080352	BOLT, M8X 35 PLATED	2							
12	1	114250-39450	SWITCH, 0.5KG	1							
13	1	124160-39140	BOLT, PIPE JOINT M10	1							
14	1	119802-39450	PIPE ASSY, OIL	1							
15	1	129005-59830	BOLT ASSY, JOINT M8	1							
16	2	23857-030000	BOLT, JOINT 3	1							
17	2	22190-080002	WASHER, SEAL 6	1							
18	1	22190-080002	WASHER, SEAL 6	1							
19	1	22190-100002	WASHER, SEAL 10	2							
20	1	26366-060002	NUT, M6	1							

Remarks
(1) REPAIR PART.

N:Old ←Yes/No→ New. Q:Old ←No/Yes→ New. R:Old ←Yes/Yes→ New. S:Old ←No/No→ New. W:Add. Z:Discontinued. F:Interchangeable by set. K:Q'ty Change

Copyright (C) YANMAR CO., LTD. All RightsReserved.

0CW10-M14300

Fig.10. COOLING WATER SYSTEM

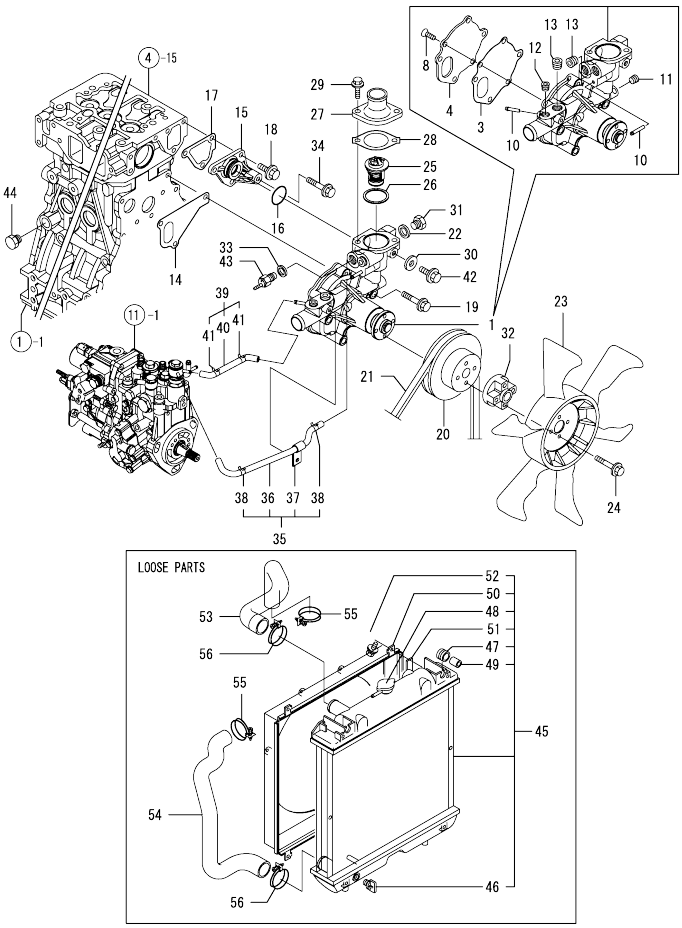

(A)=3TNV88-GMG (D)=
(B)= (E)=
(C)= (F)=

No.	Lev.	Parts No.	Description	Q'ty (A)	(B)	(C)	(D)	(E)	(F)	I	R
1	1	129004-42001	PUMP ASSY, WATER	1							
3	2	129100-42051	GASKET, WATER PUMP	1							
4	2	129100-42121	PLATE	1							
8	2	121850-42410	SCREW	3							
10	2	119802-49113	JOINT, PIPE	2							
11	2	23876-010000	PLUG, R01	1							
12	2	23875-020000	PLUG, R02	1							
13	2	129916-49740	PLUG, R03	2							
14	1	129486-42021	GASKET, WATER PUMP	1							
15	1	129004-42040	JOINT	1							
16	1	129486-42140	O-RING, G30	1							
17	1	124395-49840	GASKET	1							
18	1	26106-080162	BOLT, M8X 16 PLATED	3							
19	1	26106-080602	BOLT, M8X 60 PLATED	3							
20	1	129155-42350	V-PULLEY	1							
21	1	119831-42290	V-BELT, A37.5	1							
22	1	124465-44950	GASKET, 16	1							
23	1	129030-44740	FAN, COOLING D360XUG	1							
24	1	26106-060302	BOLT, M6X 30 PLATED	4							
25	1	129155-49801	THERMOSTAT, 71	1							
26	1	129150-49811	GASKET, THERMOSTAT	1							
27	1	129350-49530	COVER, THERMOSTAT	1							
28	1	129795-49551	GASKET	1							
29	1	26106-080222	BOLT, M8X 22 PLATED	2							
30	1	23414-080000	GASKET, 8X1.0	1							
31	1	121450-42450	PLUG, M16	1							
32	1	121267-44760	SPACER	1							
33	1	124465-44950	GASKET, 16	1							
34	1	26106-080452	BOLT, M8X 45 PLATED	1							
35	1	129004-49610	PIPE ASSY, WATER	1							
36	2	129004-49711	PIPE ASSY, WATER	1							
37	2	119802-49730	RETAINER, PIPE	1							
38	2	124722-59050	CLIP, HOSE 9	2							
39	1	129004-49620	PIPE ASSY, WATER	1							
40	2	129004-49721	PIPE ASSY, WATER	1							
41	2	124722-59050	CLIP, HOSE 9	2							
42	1	26106-080122	BOLT, M8X 12 PLATED	1							
43	1	121250-44901	SWITCH, 110	1							
44	1	171056-49120	PLUG, DRAIN	1							
45	1	129044-44500	RADIATOR ASSY	1							
46	2	129508-44550	COCK ASSY	1							
47	2	129467-44580	MOUNT, RUBBER	2							
48	2	129107-44590	CAP, RADIATOR	1							
49	2	129467-44590	COLLAR	2							
50	2	129044-44600	SHROUD	1							
51	2	129601-44610	GASKET	2							
52	2	26014-060122	BOLT, M6X 12	4							
53	1	129602-49010	PIPE, WATER	1							
54	1	129612-49040	PIPE, WATER	1							
55	1	23010-038000	CLAMP, 38	2							
56	1	23010-044000	CLAMP, 44	2							

N:Old ←Yes/No→ New. Q:Old ←No/Yes→ New. R:Old ←Yes/Yes→ New. S:Old ←No/No→ New. W:Add. Z:Discontinued. F:Interchangeable by set. K:Q'ty Change

Copyright (C) YANMAR CO., LTD. All RightsReserved.

0CW10-M14300

Fig.11. FUEL INJECTION PUMP

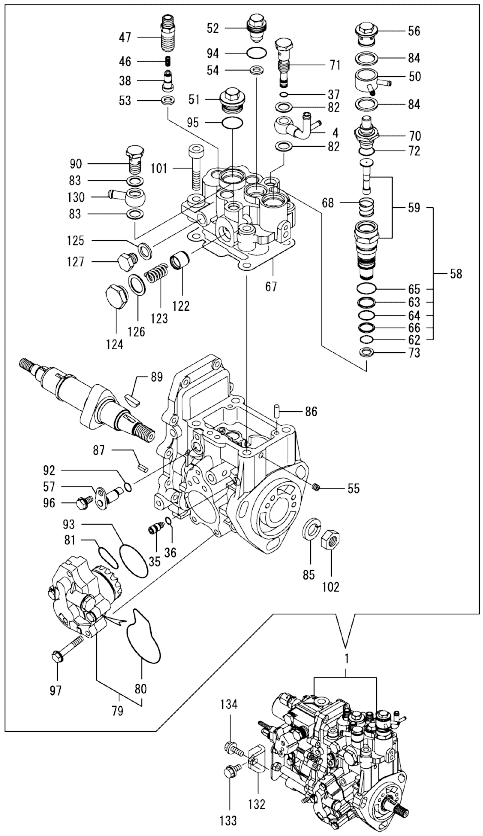

Remarks
(1) GOVERNOR ASSY(FIG.12) IS INCORPORATED IN THIS FOP.CMP (REF.NO.1).

(A)=3TNV88-GMG (B)= (C)= (D)= (E)= (F)=

No.	Lev.	Parts No.	Description	Q'ty (A)	(B)	(C)	(D)	(E)	(F)	I	R
1	1	729247-51390	PUMP ASSY, INJECTION	1							1
4	2	158552-51670	JOINT, OVER FLOW	1							
35	2	158600-51270	STOPPER, TAPPET	1							
36	2	158563-51281	O-RING, 4D S6	1							
37	2	158563-51281	O-RING, 4D S6	1							
38	2	158560-51300	VALVE ASSY, DELIVERY	3							
46	2	158563-51330	SPRING, DELIVERY	3							
47	2	158601-51340	HOLDER, DELIVERY	3							
50	2	158553-51551	JOINT	1							
51	2	158601-51550	PLUG	1							
52	2	119802-51560	PLUG, BARREL	1							
53	2	158552-51570	GASKET	3							
54	2	158552-51570	GASKET	1							
55	2	158557-51570	PLUG	1							
56	2	158601-51570	PLUG	1							
57	2	158552-51580	LIFTER	1							
58	2	119802-51590	TIMER SET	1							
59	3	119802-51600	TIMER ASSY	1							
62	3	158553-51670	O-RING, 1011	1							
63	3	119802-51680	RING, BACK UP	1							
64	3	119802-51690	O-RING	1							
65	3	24356-010200	O-RING, 4D1020	1							
66	3	24372-000150	RING, BACK UP T2P15	1							
67	2	158552-51600	GASKET	1							
68	2	158553-51630	SPRING, TIMER	1							
70	2	158553-51640	ELEMENT	1							
71	2	158601-51650	JOINT, OVER FLOW	1							
72	2	158553-51660	O-RING, P14	1							
73	2	158553-51680	GASKET	1							
79	2	158552-52100	PUMP ASSY, FUEL FEED	1							
80	3	158552-52500	O-RING	1							
81	2	158552-52310	O-RING	1							
82	2	22190-120002	WASHER, SEAL 12	2							
83	2	22190-120002	WASHER, SEAL 12	2							
84	2	22190-180002	WASHER, SEAL 18	2							
85	2	22217-140000	WASHER, SPRING 14	1							
86	2	22312-050140	PIN, PARALLEL M5X14	2							
87	2	22351-050010	PIN, SPRING 5.0X10	2							
89	2	119802-51090	KEY, 4X16	1							
90	2	23857-060000	BOLT, JOINT 6	1							
92	2	24311-000070	O-RING, 1AP7.0	1							
93	2	158552-52400	O-RING, 4E S42	1							
94	2	24356-010180	O-RING, 4D1018	1							
95	2	24356-010200	O-RING, 4D1020	1							
96	2	26106-060102	BOLT, M6X 10 PLATED	1							
97	2	158553-51770	BOLT	4							
101	2	26450-080452	BOLT, M8X 45	4							
102	2	26776-140002	NUT, LOCK M14	1							
122	2	158601-51770	PISTON	1							
123	2	158552-51781	SPRING	1							
124	2	158601-51790	PLUG	1							

N:Old ←Yes/No→ New. Q:Old ←No/Yes→ New. R:Old ←Yes/Yes→ New. S:Old ←No/No→ New. W:Add. Z:Discontinued. F:Interchangeable by set. K:Q'ty Change

++ CONTINUE ++

Copyright (C) YANMAR CO., LTD. All RightsReserved.

0CW10-M14300

Fig.11. FUEL INJECTION PUMP

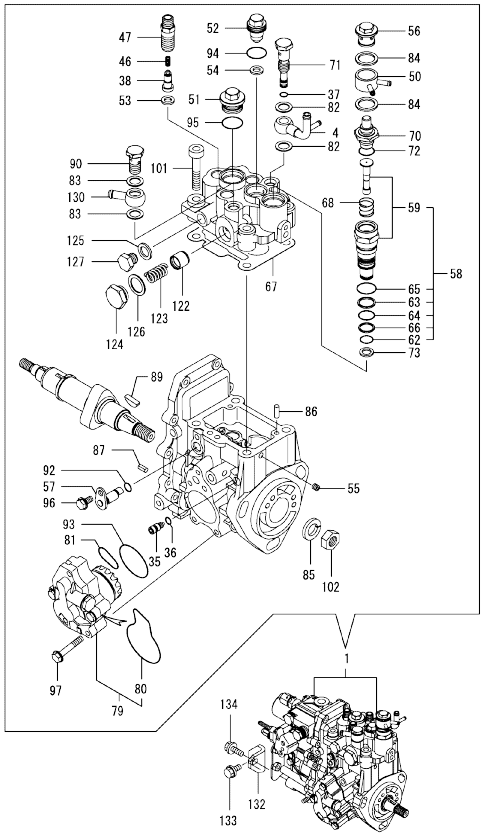

Remarks
(1) GOVERNOR ASSY(FIG.12) IS INCORPORATED IN THIS FOP.CMP (REF.NO.1).

(A)=3TNV88-GMG
(B)=
(C)=
(D)=
(E)=
(F)=

No.	Lev.	Parts No.	Description	Q'ty (A)	(B)	(C)	(D)	(E)	(F)	I	R
125	2	22190-120002	WASHER, SEAL 12	1							
126	2	22190-180002	WASHER, SEAL 18	1							
127	2	23887-120002	PLUG, 12	1							
130	2	129916-59020	JOINT, PIPE 12	1							
132	1	119802-51250	RETAINER, PUMP	1							
133	1	26106-080162	BOLT, M8X 16 PLATED	1							
134	1	26106-080202	BOLT, M8X 20 PLATED	1							

N:Old ←Yes/No→ New. Q:Old ←No/Yes→ New. R:Old ←Yes/Yes→ New. S:Old ←No/No→ New. W:Add. Z:Discontinued. F:Interchangeable by set. K:Q'ty Change

Copyright (C) YANMAR CO., LTD. All RightsReserved.

0CW10-M14300

Fig.12. GOVERNOR

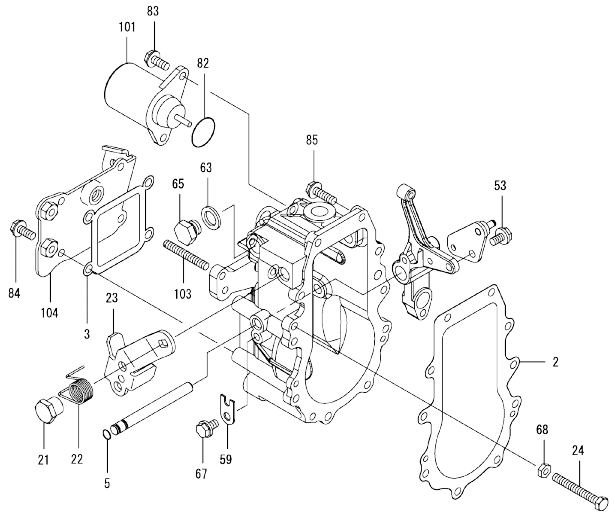

(A)=3TNV88-GMG (D)=
(B)= (E)=
(C)= (F)=

No.	Lev.	Parts No.	Description	Q'ty (A)	(B)	(C)	(D)	(E)	(F)	I	R
2	2	158553-61050	GASKET	1							
3	2	158553-61070	GASKET	1							
5	2	129155-51280	O-RING, S6	1							
21	2	129255-61410	NUT, LOCK	1							
22	2	119807-61420	SPRING, RETURN	1							
23	2	129246-61441	LEVER, REGULATOR	1							
24	2	129155-61460	BOLT, IDLE	1							
53	2	26106-060102	BOLT, M6X 10 PLATED	1							
59	2	119660-61901	RETAINER, SHAFT	1							
63	2	22190-120000	WASHER, SEAL 12	1							
65	2	23887-120002	PLUG, 12	1							
67	2	26106-060102	BOLT, M6X 10 PLATED	1							
68	2	26756-060002	NUT, LOCK M6	1							
82	2	158552-61900	O-RING	1							
83	2	26106-060142	BOLT, M6X 14 PLATED	2							
84	2	26106-060142	BOLT, M6X 14 PLATED	4							
85	2	26106-060202	BOLT, M6X 20 PLATED	10							
101	2	119653-77950	SOLENOID, STOP	1							
103	2	171002-66830	SCREW	1							
104	2	129246-61061	COVER, GOVERNOR CASE	1							

Remarks
* THIS FIGURE(GOVERNOR ASSY)IS INCORPORATED IN THE FUEL INJECTION PUMP ASSY(FIG.11).

N:Old ←Yes/No→ New. Q:Old ←No/Yes→ New. R:Old ←Yes/Yes→ New. S:Old ←No/No→ New. W:Add. Z:Discontinued. F:Interchangeable by set. K:Q'ty Change

Copyright (C) YANMAR CO., LTD. All RightsReserved.

0CW10-M14300

Fig.13. FUEL INJECTION VALVE

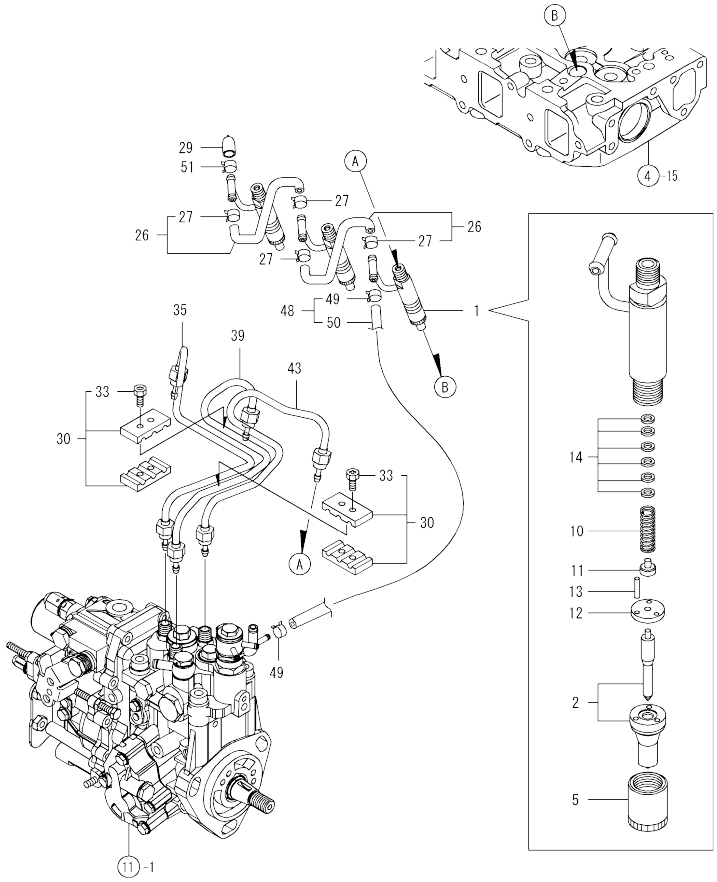

(A)=3TNV88-GMG (D)=
(B)= (E)=
(C)= (F)=

No.	Lev.	Parts No.	Description	Q'ty (A)	(B)	(C)	(D)	(E)	(F)	I	R
1	1	729246-53101	VALVE ASSY,INJECTION	3							
2	2	129246-53001	VALVE ASSY,INJECTION	3							
5	2	114250-53080	NUT, NOZZLE D16.95	3							
10	2	114250-53120	SPRING, NOZZLE	3							
11	2	114250-53130	SEAT, SPRING	3							
12	2	114250-53140	PLATE	3							
13	2	114250-53210	PIN	6							
14	2	114250-53400	SHIM SET	3							
26	1	129486-59551	PIPE ASSY, RETURN	2							
27	2	124722-59050	CLIP, HOSE 9	4							
29	1	119593-59581	CAP	1							
30	1	129150-59120	RETAINER, PIPE	2							
33	2	129150-59131	BOLT, M4X14	4							
35	1	129004-59811	PIPE ASSY, INJECTION	1							
39	1	129004-59821	PIPE ASSY, INJECTION	1							
43	1	129004-59831	PIPE ASSY, INJECTION	1							
48	1	119802-59550	PIPE ASSY, RETURN	1							
49	2	124722-59050	CLIP, HOSE 9	2							
50	2	119802-59560	PIPE, FUEL RETURN	1							
51	1	124060-77680	CLIP, HOSE 10	1							

N:Old ←Yes/No→ New. Q:Old ←No/Yes→ New. R:Old ←Yes/Yes→ New. S:Old ←No/No→ New. W:Add. Z:Discontinued. F:Interchangeable by set. K:Q'ty Change

Copyright (C) YANMAR CO., LTD. All RightsReserved.

0CW10-M14300

Fig.14. FUEL LINE

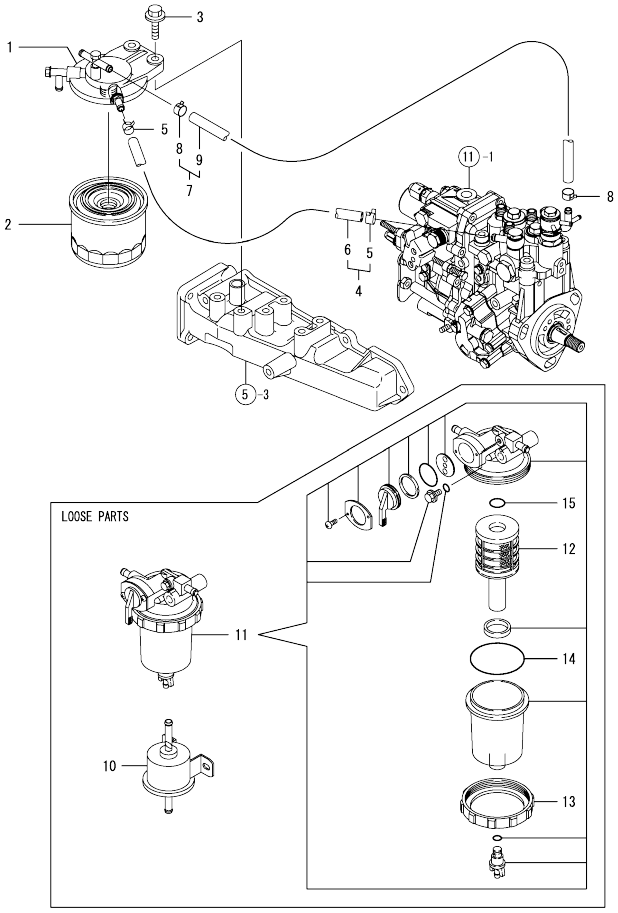

(A)=3TNV88-GMG (D)=
(B)= (E)=
(C)= (F)=

No.	Lev.	Parts No.	Description	Q'ty (A)	(B)	(C)	(D)	(E)	(F)	I	R
1	1	129004-55612	BRACKET, FILTER	1							
2	1	119802-55801	FILTER, FUEL	1							
3	1	26106-080302	BOLT, M8X 30 PLATED	2							
4	1	129210-59230	PIPE ASSY, FUEL	1							
5	2	124766-59050	CLIP, HOSE 12	2							
6	2	129555-59511	PIPE, FUEL	1							
7	1	129210-59100	PIPE ASSY, FUEL	1							
8	2	124766-59050	CLIP, HOSE 12	2							
9	2	105025-59580	PIPE, FUEL	1							
10	1	119225-52102	PUMP ASSY, FUEL FEED	1							
11	1	119802-55700	SEPARATOR ASSY	1							
12	2	119802-55710	ELEMENT	1							
13	2	129100-55690	RING, RETAINING	1							
14	2	24321-000650	O-RING, 1AG65.0	1							
15	2	24311-000160	O-RING, 1AP16.0	1							

N:Old ←Yes/No→ New. Q:Old ←No/Yes→ New. R:Old ←Yes/Yes→ New. S:Old ←No/No→ New. W:Add. Z:Discontinued. F:Interchangeable by set. K:Q'ty Change

Copyright (C) YANMAR CO., LTD. All RightsReserved.

0CW10-M14300

Fig.15. STARTING MOTOR

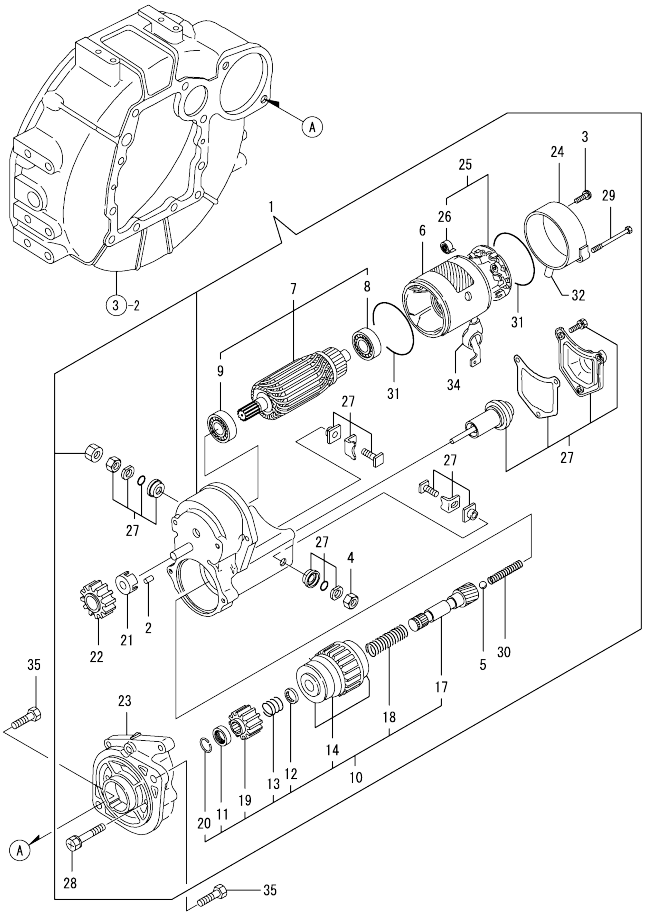

(A)=3TNV88-GMG (D)=
(B)= (E)=
(C)= (F)=

No.	Lev.	Parts No.	Description	Q'ty (A)	(B)	(C)	(D)	(E)	(F)	I	R
1	1	129129-77010	STARTER ASSY	1							
2	2	X0283060061	ROLLER	5							
3	2	129129-77460	SCREW	2							
4	2	X9490561370	NUT	1							
5	2	X9491200240	BALL	1							
6	2	129129-77210	YOKE ASSY	1							
7	2	129129-77220	ARMATURE ASSY	1							
8	3	129129-77230	BEARING	1							
9	3	129129-77240	BEARING	1							
10	2	129129-77250	STARTER	1							
11	3	X0280210230	NUT	1							
12	3	X0283270140	RETAINER	1							
13	3	X9491703371	SPRING, COIL	1							
14	3	129129-77390	CLUTCH ASSY, STARTER	1							
17	3	129129-77400	SHAFT	1							
18	3	129129-77410	SPRING, COIL	1							
19	3	129129-77420	PINION	1							
20	3	129129-77430	RING	1							
21	2	129129-77260	RETAINER	1							
22	2	129129-77270	PINION	1							
23	2	129129-77280	HOUSING	1							
24	2	129129-77290	FRAME	1							
25	2	129129-77300	HOLDER ASSY	1							
26	3	X9491730461	SPRING	4							
27	2	129129-77310	SWITCH ASSY	1							
28	2	129129-77320	BOLT	2							
29	2	129129-77330	BOLT	2							
30	2	129129-77340	SPRING	1							
31	2	129129-77350	O-RING	2							
32	2	129129-77362	COVER	1							
34	2	129129-77380	CAP	1							
35	1	26116-120252	BOLT, M12X 25 PLATED	2							

N:Old ←Yes/No→ New. Q:Old ←No/Yes→ New. R:Old ←Yes/Yes→ New. S:Old ←No/No→ New. W:Add. Z:Discontinued. F:Interchangeable by set. K:Q'ty Change

Copyright (C) YANMAR CO., LTD. All RightsReserved.

0CW10-M14300

Fig.16. GENERATOR

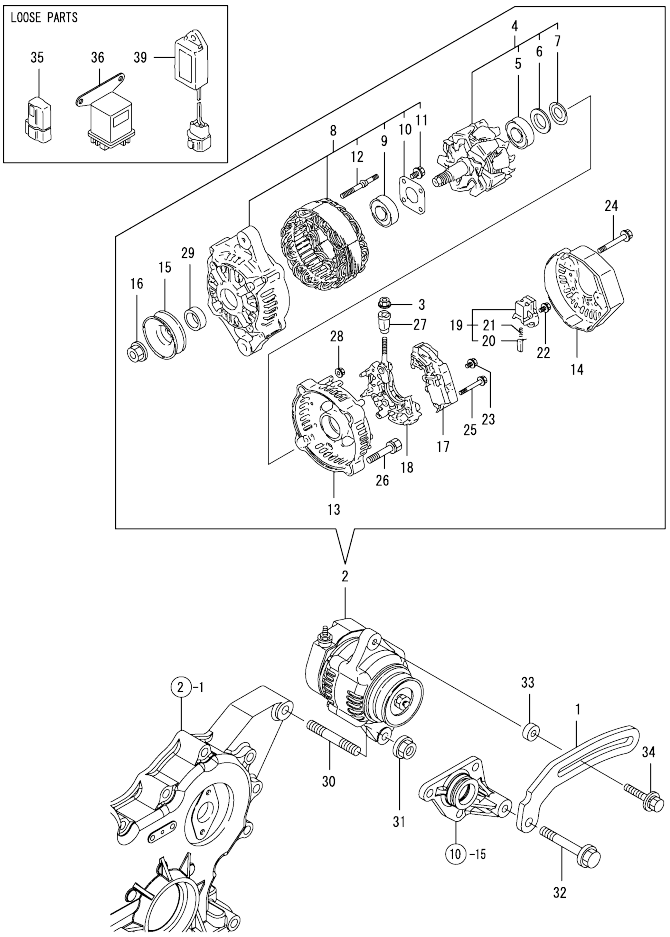

(A)=3TNV88-GMG (D)=
(B)= (E)=
(C)= (F)=

No.	Lev.	Parts No.	Description	Q'ty (A)	(B)	(C)	(D)	(E)	(F)	I	R
1	1	119940-77330	ADJUSTER	1							
2	1	129423-77200	GENERATOR, 12V-40A	1							
3	2	X9490561001	NUT	1							
4	2	119620-77380	ROTOR ASSY	1							
5	3	119620-79240	BALL BEARING	1							
6	3	119620-79250	COVER, BEARING	1							
7	2	119620-79360	WASHER, THRUST	1							
8	2	119620-77421	FRAME ASSY, DRIVE	1							
9	3	119620-79200	BALL BEARING	1							
10	3	119620-79210	PLATE	1							
11	3	119620-79220	SCREW	4							
12	3	119620-79230	BOLT, STUD	2							
13	2	119620-77440	FLAME ASSY, REAR	1							
14	2	129240-79300	COVER	1							
15	2	119620-77461	PULLEY	1							
16	2	119620-77471	NUT	1							
17	2	129423-77710	REGULATOR ASSY	1							
18	2	119620-79260	HOLDER	1							
19	2	119620-79270	HOLDER, BRUSH	1							
20	3	119620-77480	BRUSH ASSY	2							
21	3	119620-79280	SPRING	2							
22	2	119620-79290	SCREW	1							
23	2	119620-79300	SCREW	1							
24	2	119620-79310	BOLT	3							
25	2	119620-79320	SCREW W/WASHER	2							
26	2	119620-79330	BOLT	2							
27	2	119620-79340	INSULATION BUSH	1							
28	2	119620-79350	NUT	2							
29	2	119620-77490	COLLAR	1							
30	1	129795-01900	STUD	1							
31	1	26306-100002	NUT, M10	1							
32	1	26106-080452	BOLT, M8X 45 PLATED	1							
33	1	119940-77270	SPACER, GENERATOR	1							
34	1	129972-77341	BOLT, ADJUSTER L=50	1							
35	1	119643-66900	DIODE	1							
36	1	119650-77910	RELAY ASSY, GLOW	1							
39	1	129211-77920	TIMER	1							

N:Old ←Yes/No→ New. Q:Old ←No/Yes→ New. R:Old ←Yes/Yes→ New. S:Old ←No/No→ New. W:Add. Z:Discontinued. F:Interchangeable by set. K:Q'ty Change

Copyright (C) YANMAR CO., LTD. All RightsReserved.

0CW10-M14300

Fig.17. GASKET SET

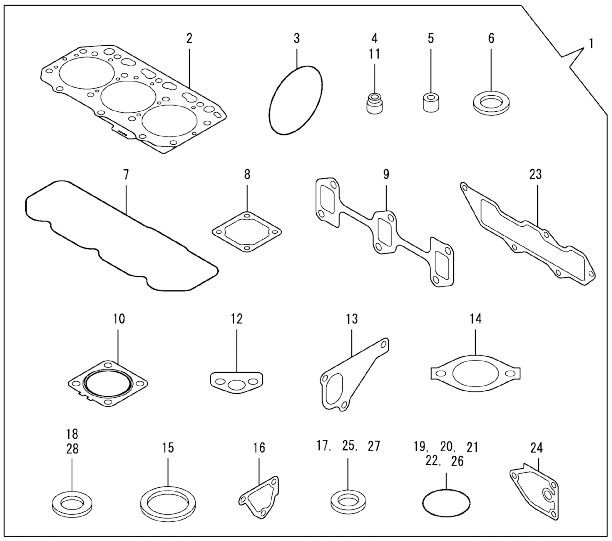

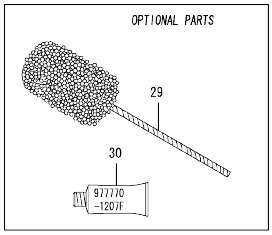

(A)=3TNV88-GMG (D)=
(B)= (E)=
(C)= (F)=

No.	Lev.	Parts No.	Description	Q'ty (A)	(B)	(C)	(D)	(E)	(F)	I	R
1	1	729150-92910	GASKET SET	1							1
2	2	129001-01340	GASKET, HEAD	1							
3	2	121850-51960	O-RING	1							
4	2	124460-11340	SEAL, VALVE STEM	3							
5	2	119802-11870	PROTECTOR, NOZZLE	3							
6	2	119625-11880	SEAT, NOZZLE	3							
7	2	129004-11310	GASKET, BONNET	1							
8	2	129150-77511	GASKET	1							
9	2	129150-13110	GASKET	1							
10	2	129004-13200	GASKET, SILENCER	1							
11	2	121400-11340	SEAL, VALVE STEM	3							
12	2	129150-35042	GASKET	1							
13	2	129486-42021	GASKET, WATER PUMP	1							
14	2	129795-49551	GASKET	1							
15	2	129150-49811	GASKET, THERMOSTAT	1							
16	2	124395-49840	GASKET	1							
17	2	22190-080002	WASHER, SEAL 6	2							
18	2	124465-44950	GASKET, 16	2							
19	2	24311-000120	O-RING, 1AP12.0	3							
20	2	24311-000320	O-RING, 1AP32.0	2							
21	2	24341-000240	O-RING, 1AS24.0	1							
22	2	129486-42140	O-RING, G30	1							
23	2	129001-12110	GASKET, MANIFOLD	1							
24	2	129150-35111	GASKET	1							
25	2	22190-220002	WASHER, SEAL 22	1							
26	2	119609-32040	O-RING, P16	4							
27	2	22190-100002	WASHER, SEAL 10	2							
28	2	23414-080000	GASKET, 8X1.0	1							
29	1	129400-92430	HONE	1							1
30	1	977770-1207F	GASKET.LIQUID	1							1

Remarks
(1) OPTIONAL PARTS.

N:Old ←Yes/No→ New. Q:Old ←No/Yes→ New. R:Old ←Yes/Yes→ New. S:Old ←No/No→ New. W:Add. Z:Discontinued. F:Interchangeable by set. K:Q'ty Change

Copyright (C) YANMAR CO., LTD. All RightsReserved.

Parts No. Index

Parts No.	Fig. No.	Ref. No.
105025-59580	14	9
114250-39450	9	12
114250-53080	13	5
114250-53120	13	10
114250-53130	13	11
114250-53140	13	12
114250-53210	13	13
114250-53400	13	14
119131-18320	6	4
119225-52102	14	10
119593-59581	13	29
119609-32040	2	17
	17	26
119620-01750	3	3
119620-77380	16	4
119620-77421	16	8
119620-77440	16	13
119620-77461	16	15
119620-77471	16	16
119620-77480	16	20
119620-77490	16	29
119620-79200	16	9
119620-79210	16	10
119620-79220	16	11
119620-79230	16	12
119620-79240	16	5
119620-79250	16	6
119620-79260	16	18
119620-79270	16	19
119620-79280	16	21
119620-79290	16	22
119620-79300	16	23
119620-79310	16	24
119620-79320	16	25
119620-79330	16	26
119620-79340	16	27
119620-79350	16	28
119620-79360	16	7
119625-11880	4	32
	17	6
119640-01640	3	9
119643-66900	16	35
119650-77910	16	36
119653-77950	12	101
119660-61901	12	59
119802-01520	2	12
119802-01561	2	13
119802-03110	4	43
119802-03121	4	44
119802-03130	4	45

Parts No.	Fig. No.	Ref. No.
119802-03141	4	46
119802-11260	4	6
119802-11270	4	7
119802-11280	4	8
119802-11870	4	55
	17	5
119802-21202	8	5
119802-25051	7	10
119802-25071	7	14
119802-25101	7	11
119802-25901	7	17
119802-32070	2	8
119802-32100	2	7
119802-32111	2	18
119802-32120	2	19
119802-32130	2	20
119802-35100	9	3
119802-35110	9	4
119802-39450	9	14
119802-49113	10	10
119802-49730	10	37
119802-51090	11	89
119802-51250	11	132
119802-51560	11	52
119802-51590	11	58
119802-51600	11	59
119802-51680	11	63
119802-51690	11	64
119802-55700	14	11
119802-55710	14	12
119802-55801	14	2
119802-59550	13	48
119802-59560	13	50
119807-61420	12	22
119808-12540	5	15
119831-42290	10	21
119940-77270	16	33
119940-77330	16	1
120130-11860	4	19
120270-54410	4	34
121023-01551	2	28
121111-21501	8	12
121250-44901	10	43
121267-44760	10	32
121400-11340	4	28
	17	11
121450-42450	10	31
121520-34810	9	2
121550-23200	8	29
121850-21680	8	11

Parts No.	Fig. No.	Ref. No.
121850-42410	10	8
121850-51960	2	21
	17	3
123900-13610	6	5
123900-13630	6	3
124060-01050	1	5
124060-77680	13	51
124160-01751	2	14
	4	39
124160-01910	1	7
		8
124160-11360	4	52
124160-39140	9	13
124240-01871	2	15
124395-49840	10	17
	17	16
124460-11340	4	29
	17	4
124465-44950	10	22
		33
	17	18
124550-21600	8	15
124722-59050	10	38
		41
	13	27
		49
124766-59050	14	5
		8
126650-12680	5	16
129001-01250	1	6
129001-01340	1	33
	17	2
129001-02931	1	25
129001-12110	5	5
	17	23
129001-32330	2	11
129001-91841	2	22
129004-01190	1	31
129004-03010	4	41
129004-03080	5	1
129004-11130	4	24
129004-11241	4	3
129004-11251	4	4
129004-11310	4	49
	17	7
129004-11350	4	40
129004-11650	4	10
129004-11700	4	15
129004-11900	4	33
129004-12100	5	3

Parts No.	Fig. No.	Ref. No.
129004-12520	5	13
129004-13109	6	1
129004-13200	6	7
	17	10
129004-14580	7	3
129004-21002	8	1
129004-34802	9	1
129004-42001	10	1
129004-42040	10	15
129004-49610	10	35
129004-49620	10	39
129004-49711	10	36
129004-49721	10	40
129004-55612	14	1
129004-59811	13	35
129004-59821	13	39
129004-59831	13	43
129005-21650	8	9
129005-22080	8	16
129005-22500	8	18
129005-22900	8	34
129005-22950	8	36
129005-59830	9	15
129012-12530	5	14
129030-44740	10	23
129044-44500	10	45
129044-44600	10	50
129100-01580	3	1
		15
	8	2
129100-01640	3	16
129100-01730	3	6
129100-01760	3	8
129100-11112	4	25
129100-23910	8	28
129100-35140	9	5
129100-35301	9	7
129100-42051	10	3
129100-42121	10	4
129100-55690	14	13
129107-44590	10	48
129120-77502	5	8
129129-77010	15	1
129129-77210	15	6
129129-77220	15	7
129129-77230	15	8
129129-77240	15	9
129129-77250	15	10
129129-77260	15	21
129129-77270	15	22

Parts No. Index

Parts No.	Fig. No.	Ref. No.
129129-77280	15	23
129129-77290	15	24
129129-77300	15	25
129129-77310	15	27
129129-77320	15	28
129129-77330	15	29
129129-77340	15	30
129129-77350	15	31
129129-77362	15	32
129129-77380	15	34
129129-77390	15	14
129129-77400	15	17
129129-77410	15	18
129129-77420	15	19
129129-77430	15	20
129129-77460	15	3
129150-01200	1	32
129150-02020	1	10
129150-02450	7	4
129150-02871	1	34
129150-02931	1	28
129150-02941	1	37
129150-03070	4	42
129150-11230	4	11
129150-11280	4	9
129150-11370	4	14
129150-11750	4	13
129150-11810	4	21
129150-13110	6	2
	17	9
129150-14101	7	7
129150-14200	7	1
129150-14400	7	2
129150-23601	8	30
129150-23611	8	32
129150-25301	7	16
129150-35042	9	6
	17	12
129150-35111	9	9
	17	24
129150-35153	9	8
129150-49811	10	26
	17	15
129150-59120	13	30
129150-59131	13	33
129150-77511	5	9
	17	8
129155-42350	10	20
129155-49801	10	25
129155-51280	12	5

Parts No.	Fig. No.	Ref. No.
129155-61460	12	24
129202-22300	8	22
129210-59100	14	7
129210-59230	14	4
129211-77920	16	39
129240-79300	16	14
129246-53001	13	2
129246-61061	12	104
129246-61441	12	23
129247-12500	5	12
129255-61410	12	21
129350-49530	10	27
129400-92430	17	29
129410-03990	5	2
129418-32320	2	10
129423-77200	16	2
129423-77710	16	17
129467-44580	10	47
129467-44590	10	49
129486-01670	3	19
129486-42021	10	14
	17	13
129486-42140	10	16
	17	22
129486-59551	13	26
129508-44550	10	46
129555-59511	14	6
129601-44610	10	51
129602-49010	10	53
129612-49040	10	54
129647-12600	5	11
129795-01780	3	18
129795-01800	2	6
129795-01900	16	30
129795-01950	2	16
129795-02412	1	13
129795-11120	4	26
129795-11180	4	27
129795-21661	8	10
129795-49551	10	28
	17	14
129900-07900	4	1
129900-32130	2	9
129916-49740	10	13
129916-59020	11	130
129972-77341	16	34
158552-51151	7	18
158552-51570	11	53
		54
158552-51580	11	57

Parts No.	Fig. No.	Ref. No.
158552-51600	11	67
158552-51670	11	4
158552-51781	11	123
158552-52100	11	79
158552-52310	11	81
158552-52400	11	93
158552-52500	11	80
158552-61900	12	82
158553-51551	11	50
158553-51630	11	68
158553-51640	11	70
158553-51660	11	72
158553-51670	11	62
158553-51680	11	73
158553-51770	11	97
158553-61050	12	2
158553-61070	12	3
158557-51570	11	55
158560-51300	11	38
158563-51281	11	36
		37
158563-51330	11	46
158600-51270	11	35
158601-51340	11	47
158601-51550	11	51
158601-51570	11	56
158601-51650	11	71
158601-51770	11	122
158601-51790	11	124
171002-66830	12	103
171051-01921	1	9
171056-49120	10	44
171340-21590	8	13
171420-01600	3	2
22190-080002	9	17
		18
	17	17
22190-100002	9	19
	17	27
22190-120000	12	63
22190-120002	11	82
		83
		125
22190-180002	11	84
		126
22190-220002	3	11
	17	25
22217-140000	7	19
	11	85
22252-000260	8	23

Parts No.	Fig. No.	Ref. No.
22312-050140	11	86
22351-030010	8	8
22351-050010	11	87
22351-060012	4	35
22512-070140	7	8
	8	6
22857-500100	4	50
		51
23010-038000	10	55
23010-044000	10	56
23414-080000	10	30
	17	28
23857-030000	9	16
23857-060000	11	90
23875-020000	10	12
23876-010000	10	11
23876-030000	2	4
23876-040000	2	5
23887-120002	11	127
	12	65
24311-000070	11	92
24311-000120	4	53
	17	19
24311-000160	14	15
24311-000320	2	23
	4	54
	17	20
24321-000650	14	14
24341-000240	2	29
	17	21
24356-010180	11	94
24356-010200	11	65
		95
24372-000150	11	66
26014-060122	10	52
26106-060102	11	96
	12	53
		67
26106-060142	12	83
		84
26106-060162	2	30
26106-060202	12	85
26106-060302	10	24
26106-080122	10	42
26106-080142	7	9
26106-080162	2	24
		25
	3	12
	4	2
	10	18

Parts No. Index

Parts No.	Fig. No.	Ref. No.
26106-080162	11	133
26106-080202	5	6
	9	10
	11	134
26106-080222	10	29
26106-080252	3	13
	4	36
26106-080302	14	3
26106-080352	3	20
	4	37
	5	10
	9	11
26106-080402	7	15
26106-080452	3	14
		14 -1
	10	34
	16	32
26106-080502	3	22
	4	38
26106-080552	2	26
26106-080602	10	19
26106-080802	5	7
26116-120252	15	35
26206-100252	3	4
26206-100302	3	5
26306-080002	2	27
	6	6
26306-100002	16	31
26366-060002	9	20
26450-080452	11	101
26756-060002	12	68
26776-140002	7	20
	11	102
27241-120000	1	14
27241-300000	1	15
27241-400000	4	23
27310-080001	4	30
719802-01500	2	1
729005-01560	1	1
729150-92910	17	1
729246-53101	13	1
729247-51390	11	1
729402-23100	8	24
977770-1207F	2	31
	3	21
	4	56
	17	30
X0280210230	15	11
X0283060061	15	2
X0283270140	15	12

Parts No.	Fig. No.	Ref. No.
X9490561001	16	3
X9490561370	15	4
X9491200240	15	5
X9491703371	15	13
X9491730461	15	26

Parts No.	Fig. No.	Ref. No.

Parts No.	Fig. No.	Ref. No.