YANMAR

PARTS CATALOG

0CW10-M11400EN

Last update Aug., 2014

PREFACE

1.This Parts Catalog carries all parts incorporated in YANMAR Model 3TNV88-SSU engine manufactured since July, 2006.

2.Each illustration corresponds to the parts list on the following page.

3.When ordering parts,clearly write down the engine model and serial number,as well as the name and number of each part in your order sheet. This will help insure reliable delivery of the parts you have ordered.

Directions for the Parts Catalog.

1.The parts stipulated in this Parts Catalog are not necessarily standard equipped parts.
2.Parts may change without prior notice.
3.The following is an example of the Parts Catalog format.

0CF10-G21601 29. FUEL INJECTION PUMP(W/BOOST)

(A)=4JH-DT
(B)=4JH-DTZ
(C)=4JH-DTZP
(D)=4JH-DTZA
(E)=4JH-DTZY
(F)=

① REF.	② LEV.	PARTS NO.	DESCRIPTION	Q'TY (A)	(B)	(C)	(D)	(E)	(F)	③ I	⑤ R
1	1	729595-51390	FUEL INJECTION PUMP	1	1	1	1	1			1
1-1	1	729595-51391	FUEL INJECTION PUMP	1	1	1	1	1		N	1
	(A=E00185)	(B=E00200)									
3	2	26022-060162	SCREW M 6X 16	9	9	9	9	9			
3-1 ④	2	26022-060162	SCREW M 6X 16	4	4	4	4	4		K	
	(A=E00156)	(B=E00156)	(C=E00156) (D=E00156)	(E=E00156)							
4	2	129470-51040	CAMSHAFT	1	1	1	1	1			
5	2	122710-51050	BEARING, ROLLER	2	2	2	2	2			
6	2	129470-51060	RETAINER	1	1	1	1	1			

Remarks
(1) BOOST COMPEMSATOR TYPE. OPTIONAL
PART, TO E00155,(4JH-DT, 4JH-DTZ

① Ref. No.

The Ref. No. listed may not be in accordance with the illustration Ref. No.

(Ex.) Illustration No. 1 List Ref No. 1 (Before change) → 1- 1 (After change)

For interchangeable symbols N, R and K, illustrations for new parts may be abbreviated.

② Lev. (Level)

Level indication
The numbers below indicate the level of relativity towards the main part.
1 ----- Main parts (Assembly parts)
2 ----- Sub component included in " 1 ".
3 ----- Sub component included in " 2 ".
Note) Parts that are not for sale are partially illustrated but not listed.

③ Interchangeability Mark

When a part change takes place, one of the following interchangeability symbols is indicated beside the part.

Symbol	Interchangeability	Contents note
N	Old ← Yes / No → New	New Part is interchangeable for Old Part but Old Part is not interchangeable for New Part.
Q	Old ← No / Yes → New	New Part is not interchangeable for Old Part but Old Part is interchangeable for New Part.
R	Old ← Yes / Yes → New	New/ Old Parts are both interchangeable.
S	Old ← No / No → New	New/ Old Parts are both not interchangeable.
W		Part newly added.
Z		Part discontinued.
F		Not interchangeable by a single part but interchangeable together with related parts.
K		Changes only for used parts quantities.

④ Effective Machine No.

When a part changes, the effective Machine No. will be indicated in the (A)-(F) column.

Product Symbol	Product No.	Product Symbol	Product No.
C	Clutch No. Compressor No.	F	Machine No. (Agricultural Equip.)
D	Drive No.	M	Machine No.
E	Engine No.		

Note 1) A date may follow the symbol. (Ex.) 1996.01
Note 2) " XXXXX " and " ZZZZZ " are for parts that could not be predicted or for engine models that could not be identified.
Note 3) (A=E00185) is the E (Engine Serial Number) for the column (A) model (in this case 4JH-DT) after the parts design change.

⑤ Remarks Mark

Figures or alphabets (symbols) are entered in the remarks column.
The comments (remarks) on parts that are indicated at the bottom of the illustration are the same symbols as those stated above.

Contents

Fig. No.	Fig. Name
3TNV88-SSU	
1.	CYLINDER BLOCK
2.	GEAR HOUSING
3.	FLYWHEEL HOUSING & OIL SUMP
4.	CYLINDER HEAD & BONNET
5.	SUCTION MANIFOLD & AIR CLEANER
6.	EXHAUST MANIFOLD & SILENCER
7.	CAMSHAFT & DRIVING GEAR
8.	CRANKSHAFT & PISTON
9.	LUB.OIL SYSTEM
10.	COOLING WATER SYSTEM
11.	FUEL INJECTION PUMP
12.	GOVERNOR
13.	FUEL INJECTION VALVE
14.	FUEL LINE
15.	STARTING MOTOR
16.	GENERATOR
17.	GASKET SET

Fig. No.	Fig. Name

0CW10-M11400

Fig.1. CYLINDER BLOCK

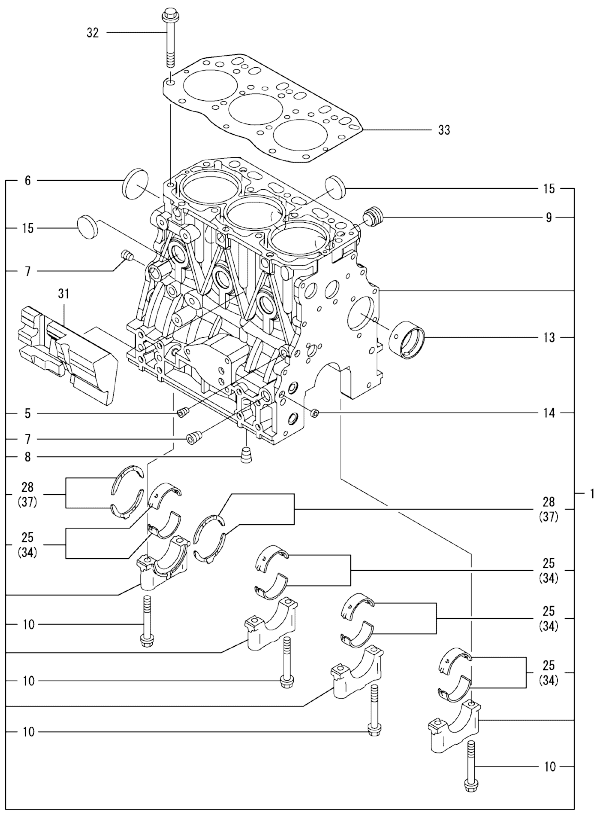

(A)=3TNV88-SSU
(B)=
(C)=
(D)=
(E)=
(F)=

No.	Lev.	Parts No.	Description	Q'ty (A)	(B)	(C)	(D)	(E)	(F)	I	R
1	1	729005-01562	BLOCK ASSY, CYLINDER	1							
5	2	124060-01050	PLUG, PT1/8	1							
6	2	129001-01250	PLUG, 50	1							
7	2	124160-01910	PLUG, PT1/4	2							
8	2	124160-01910	PLUG, PT1/4	1							
9	2	171051-01921	PLUG, NPTF1	1							
10	2	129150-02020	BOLT, METAL CAP	8							
13	2	129795-02412	BUSH, CAMSHAFT	1							
14	2	27241-120000	PLUG, 12	2							
15	2	27241-300000	PLUG 30	6							
25	2	129001-02931	BEARING, MAIN	4							3
28	2	129150-02931	BEARING, THRUST	2							
31	1	129004-01190	SPACER	1							
32	1	129150-01200	BOLT, HEAD	14							
33	1	129001-01340	GASKET, HEAD	1							
34	1	129150-02871	BEARING, 0.25 US	4							1
37	1	129150-02941	BEARING, THRUST 0.25	1							2

Remarks
(1) UNDER-SIZE(U.S=0.25)PART.
(2) OVER-SIZE(O.S=0.25)PART.
(3) REPAIR PART.

N:Old ←Yes/No→ New. Q:Old ←No/Yes→ New. R:Old ←Yes/Yes→ New. S:Old ←No/No→ New. W:Add. Z:Discontinued. F:Interchangeable by set. K:Q'ty Change

Copyright (C) YANMAR CO., LTD. All RightsReserved.

0CW10-M11400

Fig.2. GEAR HOUSING

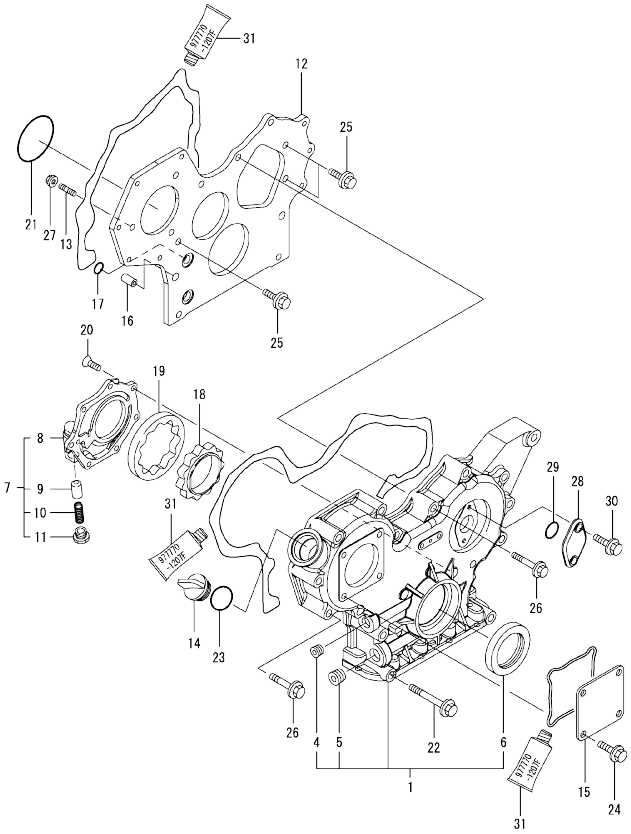

(A)=3TNV88-SSU (D)=
(B)= (E)=
(C)= (F)=

No.	Lev.	Parts No.	Description	Q'ty (A)	(B)	(C)	(D)	(E)	(F)	I	R
1	1	729233-01500	CASE ASSY, GEAR	1							
4	2	23876-030000	PLUG, R03	1							
5	2	23876-040000	PLUG, R04	1							
6	2	119934-01800	SEAL, OIL	1							
7	1	119802-32100	COVER ASSY	1							
8	2	119802-32070	COVER	1							
9	2	129900-32130	VALVE, RELIEF	1							
10	2	129418-32320	SPRING	1							
11	2	129001-32330	PLUG	1							
12	1	119802-01520	FLANGE, GEAR CASE	1							
13	1	119802-01561	STUD, M8X25	3							
14	1	124160-01751	COVER, FILLER	1							
15	1	124240-01871	COVER	1							
16	1	129795-01950	PIPE, KNOCK L=18	2							
17	1	119609-32040	O-RING, P16	4							
18	1	119802-32111	ROTOR, INNER	1							
19	1	119802-32120	ROTOR, OUTER	1							
20	1	119802-32130	SCREW, M6X16	7							
21	1	121850-51960	O-RING	1							
22	1	129001-91841	BOLT, M8X85	3							
23	1	24311-000320	O-RING, 1AP32.0	1							
24	1	26106-080162	BOLT, M8X 16 PLATED	4							
25	1	26106-080162	BOLT, M8X 16 PLATED	3							
26	1	26106-080552	BOLT, M8X 55 PLATED	12							
27	1	26306-080002	NUT, M8	3							
28	1	121023-01551	COVER	1							
29	1	24341-000240	O-RING, 1AS24.0	1							
30	1	26106-060162	BOLT, M6X 16 PLATED	2							
31	1	977770-1207F	GASKET.LIQUID	1							1

Remarks
(1) OPTIONAL PART.

N:Old $\overset{\text{Yes}}{\underset{\text{No}}{\leftrightarrow}}$ New. Q:Old $\overset{\text{No}}{\underset{\text{Yes}}{\leftrightarrow}}$ New. R:Old $\overset{\text{Yes}}{\underset{\text{Yes}}{\leftrightarrow}}$ New. S:Old $\overset{\text{No}}{\underset{\text{No}}{\leftrightarrow}}$ New. W:Add. Z:Discontinued. F:Interchangeable by set. K:Q'ty Change

Copyright (C) YANMAR CO., LTD. All RightsReserved.

0CW10-M11400

Fig.3. FLYWHEEL HOUSING & OIL SUMP

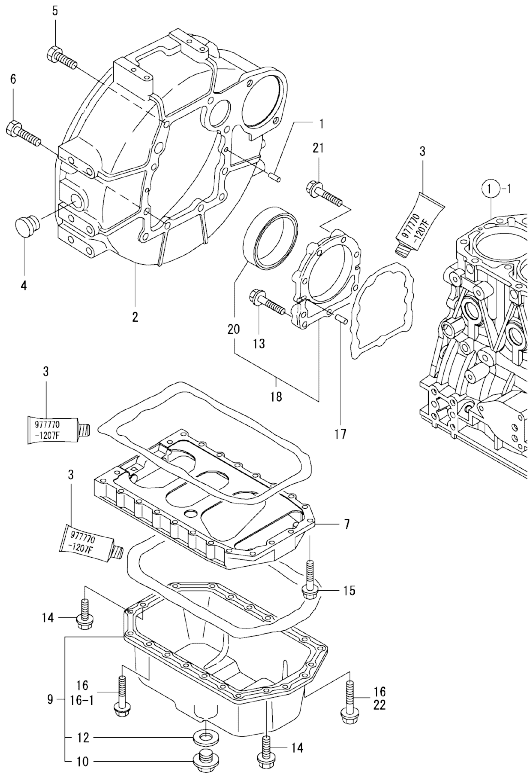

(A)=3TNV88-SSU (D)=
(B)= (E)=
(C)= (F)=

No.	Lev.	Parts No.	Description	Q'ty (A)	(B)	(C)	(D)	(E)	(F)	I	R
1	1	129100-01580	PIN, M8X16	2							
2	1	129612-01600	HOUSING, FLYWHEEL	1							
3	1	977770-1207F	GASKET.LIQUID	1							1
4	1	119620-01750	CAP	1							
5	1	26206-100252	BOLT, M10X 25 PLATED	6							
6	1	26206-100302	BOLT, M10X 30 PLATED	4							
7	1	129100-01730	SPACER, OIL SUMP	1							
9	1	129136-01780	SUMP ASSY, OIL	1							
10	2	119640-01640	PLUG, DRAIN M22	1							
12	2	22190-220002	WASHER, SEAL 22	1							
13	1	26106-080352	BOLT, M8X 35 PLATED	3							
14	1	26106-080162	BOLT, M8X 16 PLATED	4							
15	1	26106-080252	BOLT, M8X 25 PLATED	2							
16	1	26106-080452	BOLT, M8X 45 PLATED	20							
16-1	1	26106-080452	BOLT, M8X 45 PLATED	16						K	
	(A=FROM 1ST)										
17	1	129100-01580	PIN, M8X16	2							
18	1	129100-01640	CASE ASSY, OIL SEAL	1							
20	2	129795-01780	SEAL, OIL	1							
21	1	129486-01670	BOLT, M8X30	6							
22	1	26106-080502	BOLT, M8X 50 PLATED	4						W	
	(A=FROM 1ST)										

Remarks
(1) OPTIONAL PART.

N:Old $\frac{\text{Yes}}{\text{No}}$ New. Q:Old $\frac{\text{No}}{\text{Yes}}$ New. R:Old $\frac{\text{Yes}}{\text{Yes}}$ New. S:Old $\frac{\text{No}}{\text{No}}$ New. W:Add. Z:Discontinued. F:Interchangeable by set. K:Q'ty Change

Copyright (C) YANMAR CO., LTD. All RightsReserved.

0CW10-M11400

Fig.4. CYLINDER HEAD & BONNET

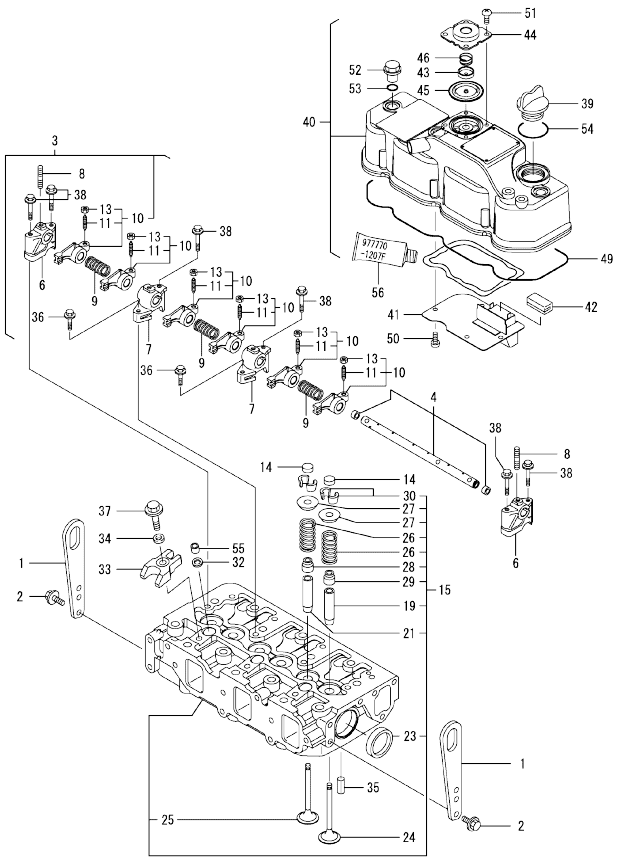

(A)=3TNV88-SSU (D)=
(B)= (E)=
(C)= (F)=

No.	Lev.	Parts No.	Description	Q'ty (A)	(B)	(C)	(D)	(E)	(F)	I	R
1	1	129900-07900	LIFTER	2							
2	1	26106-080162	BOLT, M8X 16 PLATED	4							
3	1	129004-11241	SHAFT ASSY, ROCKER	1							
4	2	129004-11251	SHAFT, ROCKER ARM	1							
6	2	119802-11260	SUPPORT, ROCKER ARM	2							
7	2	119802-11270	SUPPORT, ROCKER ARM	2							
8	2	119802-11280	STUD	3							
9	2	129150-11280	SPRING	3							
10	2	129004-11650	ARM, ROCKER	6							
11	3	129150-11230	SCREW, VALVE ADJUST	6							
13	3	129150-11750	NUT, M8	6							
14	1	129150-11370	CAP, VALVE	6							
15	1	129004-11700	HEAD ASSY, CYLINDER	1							
19	2	120130-11860	GUIDE, VALVE	3							1
21	2	129150-11810	GUIDE, VALVE	3							1
23	2	27241-400000	PLUG, 40	2							
24	2	129004-11130	VALVE, INTAKE	3							
25	2	129100-11112	VALVE, EXHAUST	3							
26	2	129795-11120	SPRING, VALVE	6							
27	2	129795-11180	RETAINER, SPRING	6							
28	2	121400-11340	SEAL, VALVE STEM	3							
29	2	124460-11340	SEAL, VALVE STEM	3							
30	2	27310-080001	COTTER, 8	6							
32	1	119625-11880	SEAT, NOZZLE	3							
33	1	129004-11900	RETAINER, NOZZLE	3							
34	1	120270-54410	WASHER, INJECTOR	3							
35	1	22351-060012	PIN, SPRING 6.0X12	2							
36	1	26106-080252	BOLT, M8X 25 PLATED	2							
37	1	26106-080352	BOLT, M8X 35 PLATED	3							
38	1	26106-080502	BOLT, M8X 50 PLATED	6							
39	1	124160-01751	COVER, FILLER	1							
40	1	129004-11350	BONNET ASSY, HEAD	1							
41	2	129004-03010	PLATE	1							
42	2	129150-03070	BAFFLE, BREATHER	1							
43	2	119802-03110	PLATE	1							
44	2	119802-03121	COVER, DIAPHRAGM	1							
45	2	119802-03130	DIAPHRAGM	1							
46	2	119802-03141	SPRING, DIAPHRAGM	1							
49	2	129004-11310	GASKET, BONNET	1							
50	2	22857-500100	SCREW, 5X10	4							
51	2	22857-500100	SCREW, 5X10	4							
52	1	124160-11360	KNOB	3							
53	1	24311-000120	O-RING, 1AP12.0	3							
54	1	24311-000320	O-RING, 1AP32.0	1							
55	1	119802-11870	PROTECTOR, NOZZLE	3							
56	1	977770-1207F	GASKET.LIQUID	1							2

Remarks
(1) REPAIR PART.
(2) OPTIONAL PART.

N:Old ←Yes/No→ New. Q:Old ←No/Yes→ New. R:Old ←Yes/Yes→ New. S:Old ←No/No→ New. W:Add. Z:Discontinued. F:Interchangeable by set. K:Q'ty Change

Copyright (C) YANMAR CO., LTD. All RightsReserved.

0CW10-M11400

Fig.5. SUCTION MANIFOLD & AIR CLEANER

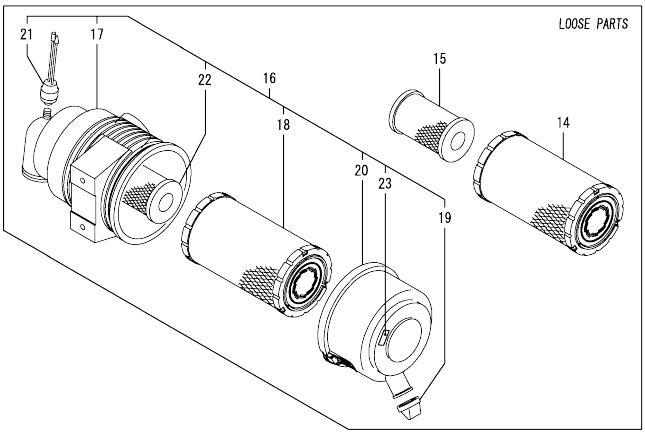

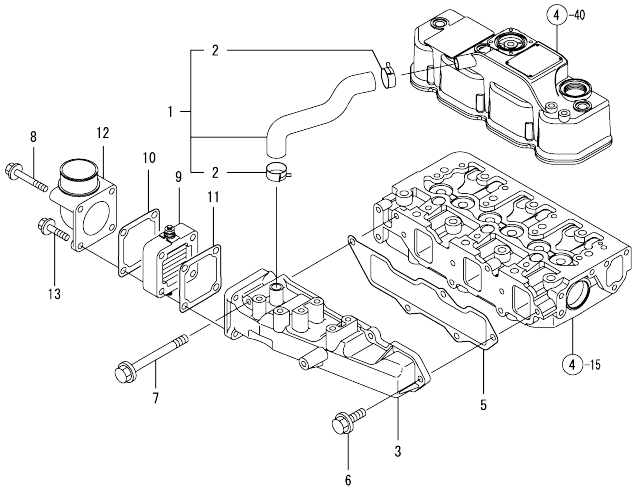

(A)=3TNV88-SSU (D)=
(B)= (E)=
(C)= (F)=

No.	Lev.	Parts No.	Description	Q'ty (A)	(B)	(C)	(D)	(E)	(F)	I	R
1	1	129004-03080	PIPE , BREATHER	1							
2	2	129410-03990	CLAMP 22	2							
3	1	129004-12100	MANIFOLD, AIR INTAKE	1							
5	1	129001-12110	GASKET, MANIFOLD	1							
6	1	26106-080202	BOLT, M8X 20 PLATED	4							
7	1	26106-080802	BOLT, M8X 80 PLATED	1							
8	1	26106-080802	BOLT, M8X 80 PLATED	2							
9	1	129100-77500	HEATER, AIR 12V	1							
10	1	129100-77510	GASKET, AIR HEATER	1							
11	1	129150-77511	GASKET	1							
12	1	171340-77520	BEND	1							
13	1	26106-080402	BOLT, M8X 40 PLATED	2							
14	1	119808-12520	ELEMENT	1							
15	1	129051-12530	ELEMENT	1							
16	1	119910-12610	CLEANER ASSY, AIR	1							
17	2	119910-12510	BODY, AIR CLEANER	1							
18	2	119808-12520	ELEMENT	1							
19	2	119808-12540	VALVE, UNLOADER	1							
20	2	119866-12541	COVER ASSY	1							
21	2	119140-12680	INDICATOR	1							
22	2	129051-12530	ELEMENT	1							
23	2	129612-12650	MARKING,(W)	1							

N:Old ←Yes/No→ New. Q:Old ←No/Yes→ New. R:Old ←Yes/Yes→ New. S:Old ←No/No→ New. W:Add. Z:Discontinued. F:Interchangeable by set. K:Q'ty Change

Copyright (C) YANMAR CO., LTD. All RightsReserved.

0CW10-M11400

Fig.6. EXHAUST MANIFOLD & SILENCER

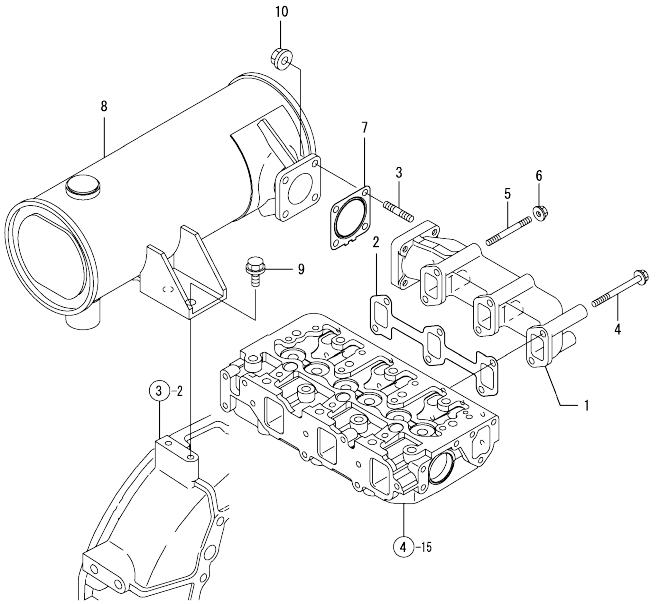

(A)=3TNV88-SSU (D)=
(B)= (E)=
(C)= (F)=

No.	Lev.	Parts No.	Description	Q'ty (A)	(B)	(C)	(D)	(E)	(F)	I	R
1	1	129004-13129	MANIFOLD, EXHAUST	1							
2	1	129150-13110	GASKET	1							
3	1	119131-18320	STUD, M8X22	4							
4	1	123900-13630	BOLT, M8X80	4							
5	1	123900-13610	STUD, M8X80	2							
6	1	26306-080002	NUT, M8	2							
7	1	129004-13200	GASKET, SILENCER	1							
8	1	129240-13550	SILENCER	1							
9	1	26106-100202	BOLT, M10X 20 PLATED	2							
10	1	26306-080002	NUT, M8	4							

N:Old ◄Yes/No► New. Q:Old ◄No/Yes► New. R:Old ◄Yes/Yes► New. S:Old ◄No/No► New. W:Add. Z:Discontinued. F:Interchangeable by set. K:Q'ty Change

Copyright (C) YANMAR CO., LTD. All RightsReserved.

0CW10-M11400

Fig.7. CAMSHAFT & DRIVING GEAR

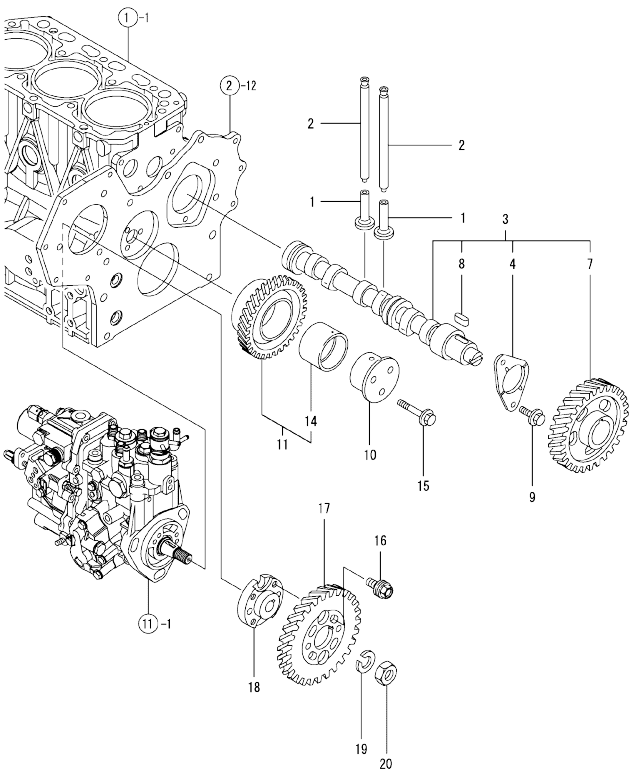

(A)=3TNV88-SSU (D)=
(B)= (E)=
(C)= (F)=

No.	Lev.	Parts No.	Description	Q'ty (A)	(B)	(C)	(D)	(E)	(F)	I	R
1	1	129150-14200	TAPPET	6							
2	1	129150-14400	ROD, PUSH L=178	6							
3	1	129129-14580	CAMSHAFT ASSY	1							
4	2	129150-02450	BEARING, THRUST	1							
7	2	129150-14101	GEAR, CAMSHAFT	1							
8	2	22512-070140	KEY, 7X 14	1							
9	1	26106-080142	BOLT, M8X 14 PLATED	2							
10	1	119802-25051	SHAFT, IDLE	1							
11	1	119802-25101	GEAR ASSY, IDLE	1							
14	2	119802-25071	BUSH, IDLE GEAR	1							1
15	1	26106-080402	BOLT, M8X 40 PLATED	3							
16	1	129150-25301	BOLT	4							
17	1	119802-25901	GEAR, PUMP	1							
18	1	158552-51151	FLANGE	1							
19	1	22217-140000	WASHER, SPRING 14	1							
20	1	26776-140002	NUT, LOCK M14	1							

Remarks
(1) REPAIR PART.

N:Old ◄Yes/No► New. Q:Old ◄No/Yes► New. R:Old ◄Yes/Yes► New. S:Old ◄No/No► New. W:Add. Z:Discontinued. F:Interchangeable by set. K:Q'ty Change

Copyright (C) YANMAR CO., LTD. All RightsReserved.

0CW10-M11400

Fig.8. CRANKSHAFT & PISTON

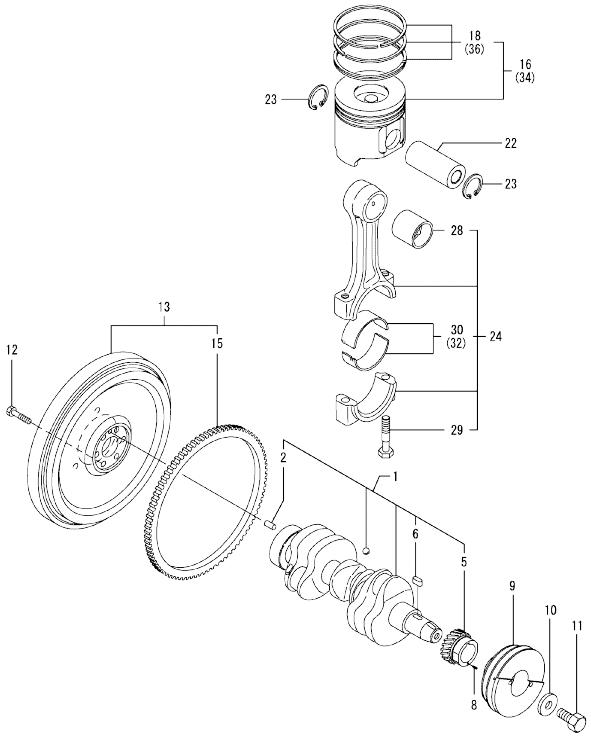

(A)=3TNV88-SSU (D)=
(B)= (E)=
(C)= (F)=

No.	Lev.	Parts No.	Description	Q'ty (A)	(B)	(C)	(D)	(E)	(F)	I	R
1	1	129004-21002	CRANKSHAFT ASSY	1							
2	2	129100-01580	PIN, M8X16	1							
5	2	119802-21202	GEAR, CRANKSHAFT	1							
6	2	22512-070140	KEY, 7X 14	1							
8	1	22351-030010	PIN, SPRING 3.0X10	1							
9	1	129004-21650	V-PULLEY, 110	1							
10	1	129795-21661	WASHER	1							
11	1	121850-21680	BOLT	1							
12	1	121111-21501	BOLT, FLYWHEEL	6							
13	1	129128-21590	FLYWHEEL ASSY	1							
15	2	119865-21600	GEAR, RING	1							
16	1	129005-22080	PISTON ASSY	3							
18	2	129005-22500	RING SET, PISTON	3							
22	1	129202-22300	PIN, PISTON D26 L70	3							
23	1	22252-000260	RING, 26	6							
24	1	729402-23100	ROD ASSY, CONNECTING	3							
28	2	129100-23910	BEARING, PISTON PIN	3							1
29	2	121550-23200	BOLT, CONNECTING ROD	6							
30	2	129150-23601	BEARING, CRANK PIN	3							
32	1	129150-23611	BEARING, 0.25 US	3							2
34	1	129005-22900	PISTON ASSY, 0.25 OS	3							3
36	2	129005-22950	RING SET, 0.25 OS	3							3

Remarks
(1) REPAIR PART.
(2) UNDER-SIZE(U.S=0.25)PART.
(3) OVER-SIZE(O.S=0.25)PART.

N:Old ←Yes/No→ New. Q:Old ←No/Yes→ New, R:Old ←Yes/Yes→ New. S:Old ←No/No→ New. W:Add. Z:Discontinued. F:Interchangeable by set. K:Q'ty Change

Copyright (C) YANMAR CO., LTD. All RightsReserved.

0CW10-M11400

Fig.9. LUB.OIL SYSTEM

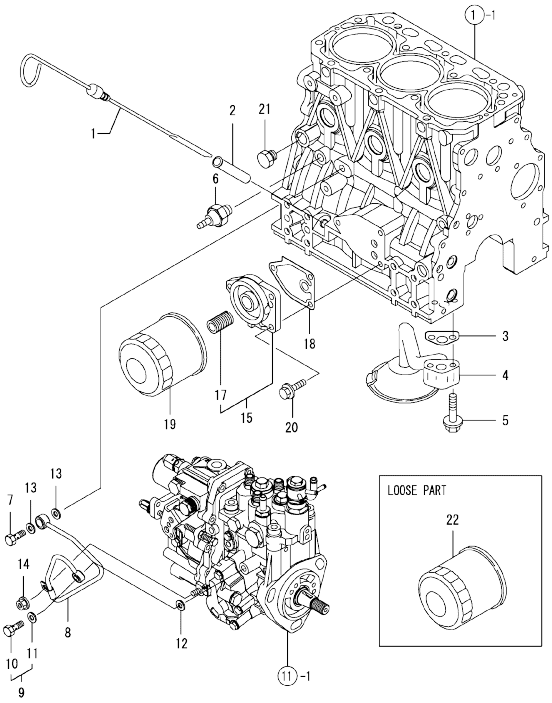

(A)=3TNV88-SSU
(B)=
(C)=
(D)=
(E)=
(F)=

No.	Lev.	Parts No.	Description	Q'ty (A)	(B)	(C)	(D)	(E)	(F)	I	R
1	1	129004-34802	DIPSTICK, OIL	1							
2	1	121520-34810	GUIDE, DIPSTICK	1							
3	1	129150-35042	GASKET	1							
4	1	129100-35301	PIPE ASSY, OIL INLET	1							
5	1	26106-080352	BOLT, M8X 35 PLATED	2							
6	1	114250-39450	SWITCH, 0.5KG	1							
7	1	124160-39140	BOLT, PIPE JOINT M10	1							
8	1	119802-39450	PIPE ASSY, OIL	1							
9	1	129005-59830	BOLT ASSY, JOINT M8	1							
10	2	23857-030000	BOLT, JOINT 3	1							
11	2	22190-080002	WASHER, SEAL 6	1							
12	1	22190-080002	WASHER, SEAL 6	1							
13	1	22190-100002	WASHER, SEAL 10	2							
14	1	26366-060002	NUT, M6	1							
15	1	119802-35100	BRACKET ASSY, FILTER	1							
17	2	129100-35140	STUD	1							
18	1	129150-35111	GASKET	1							
19	1	119005-35151	FILTER, D80X100L	1							1
20	1	26106-080202	BOLT, M8X 20 PLATED	3							
21	1	171056-49120	PLUG, DRAIN	1							
22	1	119005-35151	FILTER, D80X100L	1							1

Remarks
(1) REPAIR PART.

N:Old $\xleftarrow[\text{No}]{\text{Yes}}$ New. Q:Old $\xleftarrow[\text{Yes}]{\text{No}}$ New. R:Old $\xleftarrow[\text{Yes}]{\text{Yes}}$ New. S:Old $\xleftarrow[\text{No}]{\text{No}}$ New. W:Add. Z:Discontinued. F:Interchangeable by set. K:Q'ty Change

Copyright (C) YANMAR CO., LTD. All RightsReserved.

0CW10-M11400

Fig.10. COOLING WATER SYSTEM

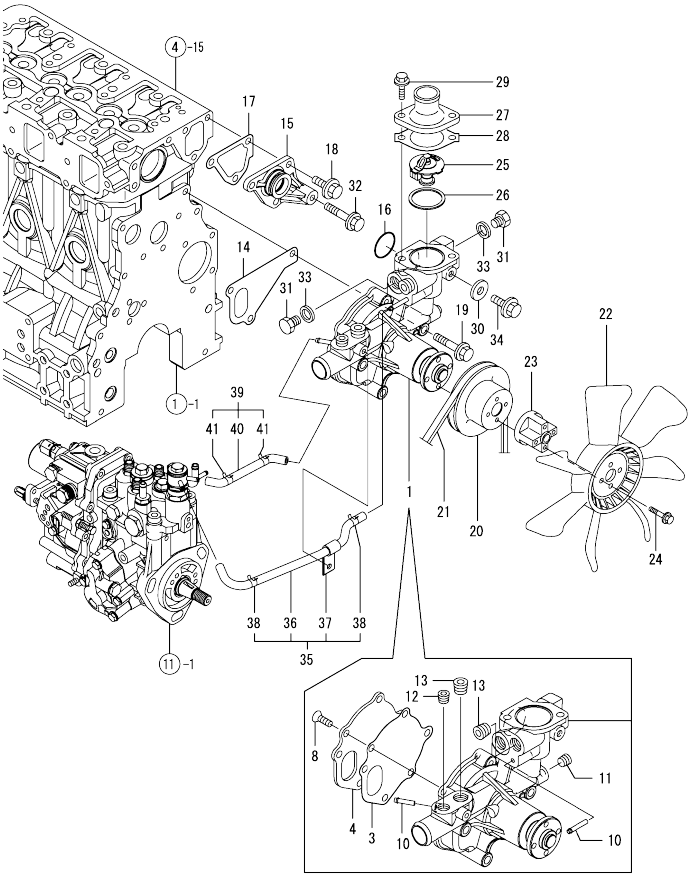

(A)=3TNV88-SSU (D)=
(B)= (E)=
(C)= (F)=

No.	Lev.	Parts No.	Description	Q'ty (A)	(B)	(C)	(D)	(E)	(F)	I	R
1	1	129004-42001	PUMP ASSY, WATER	1							
3	2	129100-42051	GASKET, WATER PUMP	1							
4	2	129100-42121	PLATE	1							
8	2	121850-42410	SCREW	3							
10	2	119802-49113	JOINT, PIPE	2							
11	2	23876-010000	PLUG, R01	1							
12	2	23876-020000	PLUG, R02	1							
13	2	129916-49740	PLUG, R03	2							
14	1	129486-42021	GASKET, WATER PUMP	1							
15	1	129004-42040	JOINT	1							
16	1	129486-42140	O-RING, G30	1							
17	1	124395-49840	GASKET	1							
18	1	26106-080162	BOLT, M8X 16 PLATED	3							
19	1	26106-080602	BOLT, M8X 60 PLATED	3							
20	1	129155-42350	V-PULLEY	1							
21	1	25132-003700	V-BELT, A37	1							
22	1	129655-44740	FAN, COOLING D380	1							
23	1	129030-44760	SPACER, FAN L38.5	1							
24	1	26106-060502	BOLT, M6X 50 PLATED	4							
25	1	129155-49801	THERMOSTAT, 71	1							
26	1	129150-49811	GASKET, THERMOSTAT	1							
27	1	129350-49530	COVER, THERMOSTAT	1							
28	1	129795-49551	GASKET	1							
29	1	26106-080222	BOLT, M8X 22 PLATED	2							
30	1	23414-080000	GASKET, 8X1.0	1							
31	1	121450-42450	PLUG, M16	2							
32	1	26106-080452	BOLT, M8X 45 PLATED	1							
33	1	124465-44950	GASKET, 16	2							
34	1	26106-080122	BOLT, M8X 12 PLATED	1							
35	1	129004-49610	PIPE ASSY, WATER	1							
36	2	129004-49711	PIPE ASSY, WATER	1							
37	2	119802-49730	RETAINER, PIPE	1							
38	2	124722-59050	CLIP, HOSE 9	2							
39	1	129004-49620	PIPE ASSY, WATER	1							
40	2	129004-49721	PIPE ASSY, WATER	1							
41	2	124722-59050	CLIP, HOSE 9	2							

N:Old ←Yes/No→ New. Q:Old ←No/Yes→ New. R:Old ←Yes/Yes→ New. S:Old ←No/No→ New. W:Add. Z:Discontinued. F:Interchangeable by set. K:Q'ty Change

Copyright (C) YANMAR CO., LTD. All RightsReserved.

0CW10-M11400

Fig.11. FUEL INJECTION PUMP

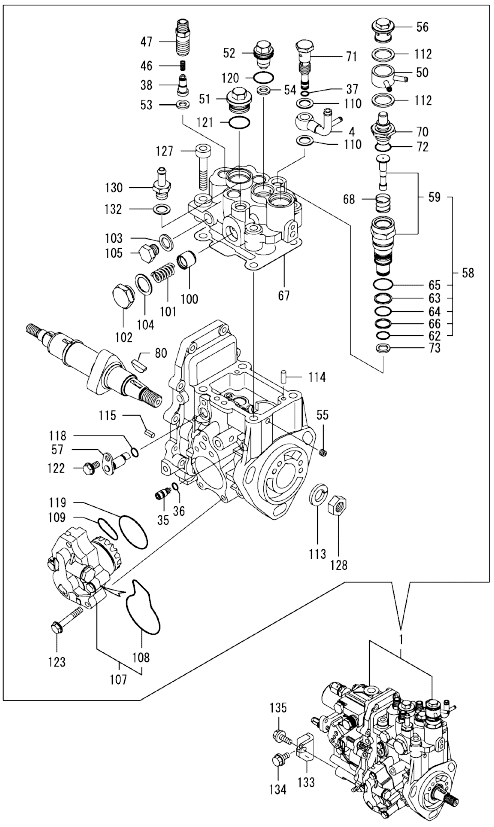

Remarks
(1) GOVERNOR ASSY(FIG.12) IS INCORPORATED IN THIS FOP.CMP (REF.NO.1).

(A)=3TNV88-SSU (D)=
(B)= (E)=
(C)= (F)=

No.	Lev.	Parts No.	Description	Q'ty (A)	(B)	(C)	(D)	(E)	(F)	I	R
1	1	729245-51440	PUMP ASSY, INJECTION	1							1
4	2	158552-51670	JOINT, OVER FLOW	1							
35	2	158600-51270	STOPPER, TAPPET	1							
36	2	158563-51281	O-RING, 4D S6	1							
37	2	158563-51281	O-RING, 4D S6	1							
38	2	158560-51300	VALVE ASSY, DELIVERY	3							
46	2	158563-51330	SPRING, DELIVERY	3							
47	2	158601-51340	HOLDER, DELIVERY	3							
50	2	158553-51551	JOINT	1							
51	2	158601-51550	PLUG	1							
52	2	119802-51560	PLUG, BARREL	1							
53	2	158552-51570	GASKET	3							
54	2	158552-51570	GASKET	1							
55	2	158557-51570	PLUG	1							
56	2	158601-51570	PLUG	1							
57	2	158552-51580	LIFTER	1							
58	2	119802-51590	TIMER SET	1							
59	3	119802-51600	TIMER ASSY	1							
62	3	158553-51670	O-RING, 1011	1							
63	3	119802-51680	RING, BACK UP	1							
64	3	119802-51690	O-RING	1							
65	3	24356-010200	O-RING, 4D1020	1							
66	3	24372-000150	RING, BACK UP T2P15	1							
67	2	158552-51600	GASKET	1							
68	2	158553-51630	SPRING, TIMER	1							
70	2	158553-51640	ELEMENT	1							
71	2	158601-51650	JOINT, OVER FLOW	1							
72	2	158553-51660	O-RING, P14	1							
73	2	158553-51680	GASKET	1							
80	2	119802-51090	KEY, 4X16	1							
100	2	158601-51770	PISTON	1							
101	2	158552-51780	SPRING	1							
	(A=E/#*****)										
101-1	2	158552-51781	SPRING	1						N	
	(A=E/#*****)										
102	2	158601-51790	PLUG	1							
103	2	22190-120002	WASHER, SEAL 12	1							
104	2	22190-180002	WASHER, SEAL 18	1							
105	2	23887-120002	PLUG, 12	1							
107	2	158552-52100	PUMP ASSY, FUEL FEED	1							
108	3	158552-52500	O-RING	1							
109	2	158552-52310	O-RING	1							
110	2	22190-120002	WASHER, SEAL 12	2							
112	2	22190-180002	WASHER, SEAL 18	2							
113	2	22217-140000	WASHER, SPRING 14	1							
114	2	22312-050140	PIN, PARALLEL M5X14	2							
115	2	22351-050010	PIN, SPRING 5.0X10	2							
118	2	24311-000070	O-RING, 1AP7.0	1							
119	2	158552-52400	O-RING, 4E S42	1							
120	2	24356-010180	O-RING, 4D1018	1							
121	2	24356-010200	O-RING, 4D1020	1							

N:Old ←Yes/No→ New. Q:Old ←No/Yes→ New. R:Old ←Yes/Yes→ New. S:Old ←No/No→ New. W:Add. Z:Discontinued. F:Interchangeable by set. K:Q'ty Change

++ CONTINUE ++

Copyright (C) YANMAR CO., LTD. All RightsReserved.

0CW10-M11400

Fig.11. FUEL INJECTION PUMP

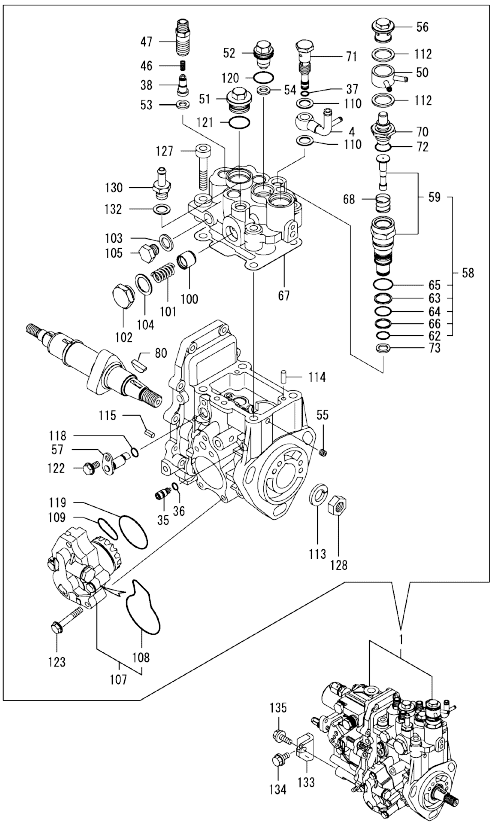

(A)=3TNV88-SSU (D)=
(B)= (E)=
(C)= (F)=

No.	Lev.	Parts No.	Description	Q'ty (A)	(B)	(C)	(D)	(E)	(F)	I	R
122	2	26106-060102	BOLT, M6X 10 PLATED	1							
123	2	158553-51770	BOLT	4							
127	2	26450-080452	BOLT, M8X 45	4							
128	2	26776-140002	NUT, LOCK M14	1							
130	2	119934-59910	JOINT, PIPE	1							
132	2	22190-120002	WASHER, SEAL 12	1							
133	1	119802-51250	RETAINER, PUMP	1							
134	1	26106-080162	BOLT, M8X 16 PLATED	1							
135	1	26106-080202	BOLT, M8X 20 PLATED	1							

Remarks
(1) GOVERNOR ASSY(FIG.12) IS INCORPORATED IN THIS FOP.CMP (REF.NO.1).

N:Old ←Yes/No→ New. Q:Old ←No/Yes→ New. R:Old ←Yes/Yes→ New. S:Old ←No/No→ New. W:Add. Z:Discontinued. F:Interchangeable by set. K:Q'ty Change

Copyright (C) YANMAR CO., LTD. All RightsReserved.

0CW10-M11400

Fig.12. GOVERNOR

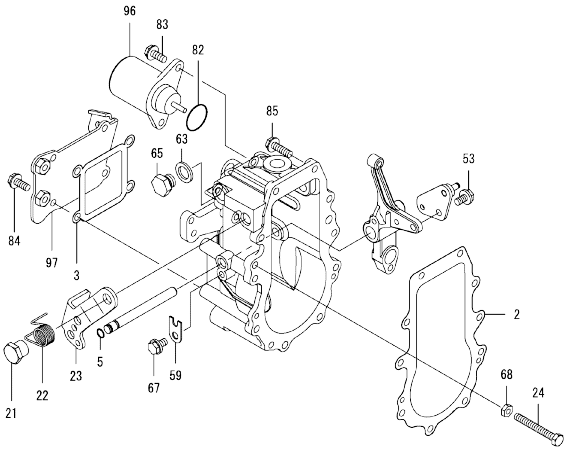

(A)=3TNV88-SSU (D)=
(B)= (E)=
(C)= (F)=

No.	Lev.	Parts No.	Description	Q'ty (A)	(B)	(C)	(D)	(E)	(F)	I	R
2	2	158553-61050	GASKET	1							
3	2	158553-61070	GASKET	1							
5	2	129155-51280	O-RING, S6	1							
21	2	129255-61410	NUT, LOCK	1							
22	2	119807-61420	SPRING, RETURN	1							
23	2	158552-61441	LEVER, REGULATOR	1							
24	2	129155-61460	BOLT, IDLE	1							
53	2	26106-060102	BOLT, M6X 10 PLATED	1							
59	2	119660-61901	RETAINER, SHAFT	1							
63	2	22190-120000	WASHER, SEAL 12	1							
65	2	23887-120002	PLUG, 12	1							
67	2	26106-060102	BOLT, M6X 10 PLATED	1							
68	2	26756-060002	NUT, LOCK M6	1							
82	2	158552-61900	O-RING	1							
83	2	26106-060142	BOLT, M6X 14 PLATED	2							
84	2	26106-060142	BOLT, M6X 14 PLATED	4							
85	2	26106-060202	BOLT, M6X 20 PLATED	10							
96	2	119653-77950	SOLENOID, STOP	1							
97	2	129642-61060	COVER, GOVERNOR CASE	1							

Remarks
* THIS FIGURE(GOVERNOR ASSY)IS INCORPORATED IN THE FUEL INJECTION PUMP ASSY(FIG.11).

N:Old $\xleftarrow[\text{No}]{\text{Yes}}$ New. Q:Old $\xleftarrow[\text{Yes}]{\text{No}}$ New, R:Old $\xleftarrow[\text{Yes}]{\text{Yes}}$ New, S:Old $\xleftarrow[\text{No}]{\text{No}}$ New, W:Add, Z:Discontinued, F:Interchangeable by set, K:Q'ty Change

Copyright (C) YANMAR CO., LTD. All RightsReserved.

0CW10-M11400

Fig.13. FUEL INJECTION VALVE

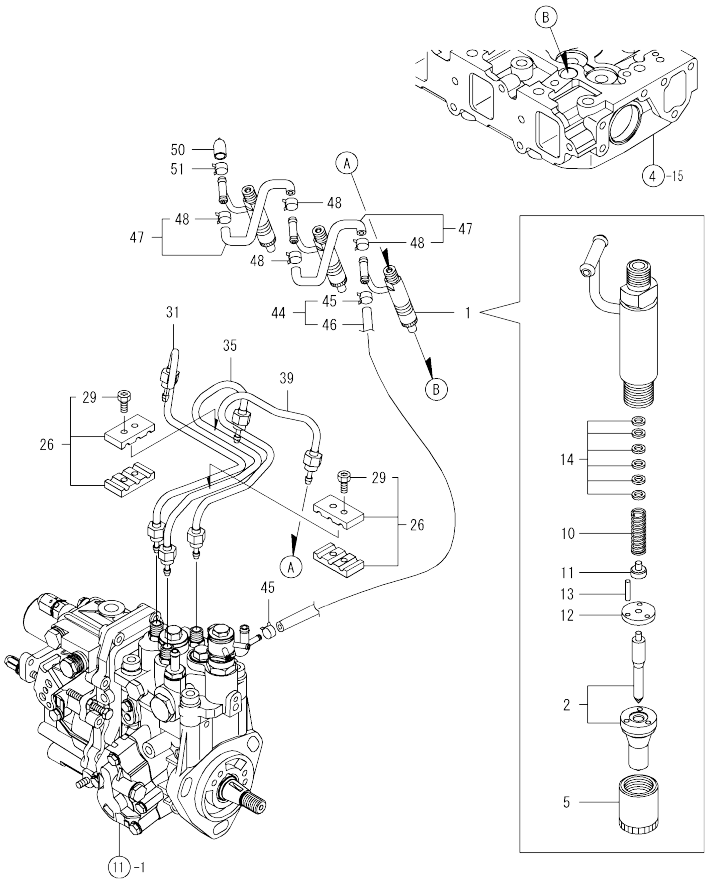

(A)=3TNV88-SSU (D)=
(B)= (E)=
(C)= (F)=

No.	Lev.	Parts No.	Description	Q'ty (A)	(B)	(C)	(D)	(E)	(F)	I	R
1	1	729245-53100	VALVE ASSY,INJECTION	3							
2	2	129004-53001	VALVE ASSY,INJECTION	3							
5	2	114250-53080	NUT, NOZZLE D16.95	3							
10	2	114250-53120	SPRING, NOZZLE	3							
11	2	114250-53130	SEAT, SPRING	3							
12	2	114250-53140	PLATE	3							
13	2	114250-53210	PIN	6							
14	2	114250-53400	SHIM SET	3							
26	1	129150-59120	RETAINER, PIPE	2							
29	2	129150-59131	BOLT, M4X14	4							
31	1	129004-59811	PIPE ASSY, INJECTION	1							
35	1	129004-59821	PIPE ASSY, INJECTION	1							
39	1	129004-59831	PIPE ASSY, INJECTION	1							
44	1	119802-59550	PIPE ASSY, RETURN	1							
45	2	124722-59050	CLIP, HOSE 9	2							
46	2	119802-59560	PIPE, FUEL RETURN	1							
47	1	129486-59551	PIPE ASSY, RETURN	2							
48	2	124722-59050	CLIP, HOSE 9	4							
50	1	119593-59581	CAP	1							
51	1	124060-77680	CLIP, HOSE 10	1							

N:Old ←Yes/No→ New. Q:Old ←No/Yes→ New. R:Old ←Yes/Yes→ New. S:Old ←No/No→ New. W:Add. Z:Discontinued. F:Interchangeable by set. K:Q'ty Change

Copyright (C) YANMAR CO., LTD. All RightsReserved.

0CW10-M11400

Fig.14. FUEL LINE

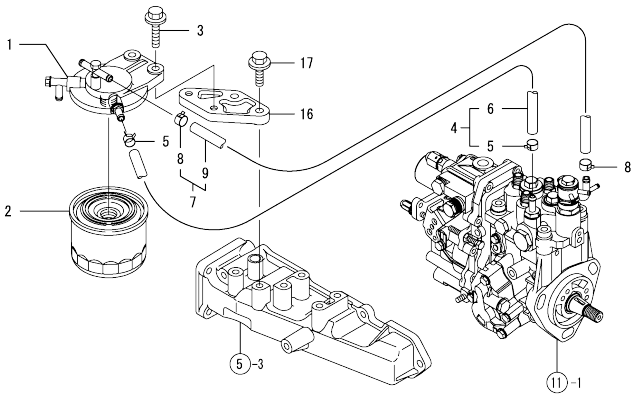

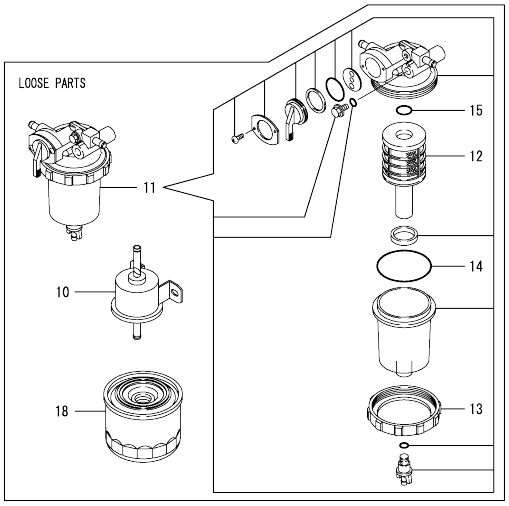

(A)=3TNV88-SSU (D)=
(B)= (E)=
(C)= (F)=

No.	Lev.	Parts No.	Description	Q'ty (A)	(B)	(C)	(D)	(E)	(F)	I	R
1	1	129004-55612	BRACKET, FILTER	1							
2	1	129907-55801	FILTER, FUEL	1							
3	1	26106-080302	BOLT, M8X 30 PLATED	2							
4	1	129210-59070	PIPE ASSY, FUEL	1							
5	2	124766-59050	CLIP, HOSE 12	2							
6	2	105025-59760	PIPE, FUEL	1							
7	1	129210-59130	PIPE ASSY, FUEL	1							
8	2	124766-59050	CLIP, HOSE 12	2							
9	2	105025-59750	PIPE, FUEL	1							
10	1	119225-52102	PUMP ASSY, FUEL FEED	1							
11	1	119802-55700	SEPARATOR ASSY	1							
12	2	119802-55710	ELEMENT	1							
13	2	129100-55690	RING, RETAINING	1							
14	2	24321-000650	O-RING, 1AG65.0	1							
15	2	24311-000160	O-RING, 1AP16.0	1							
16	1	119940-55690	SPACER	1							
17	1	26106-080252	BOLT, M8X 25 PLATED	2							
18	1	129907-55801	FILTER, FUEL	1							

N:Old ←Yes/No→ New. Q:Old ←No/Yes→ New. R:Old ←Yes/Yes→ New. S:Old ←No/No→ New. W:Add. Z:Discontinued. F:Interchangeable by set. K:Q'ty Change

Copyright (C) YANMAR CO., LTD. All RightsReserved.

0CW10-M11400

Fig.15. STARTING MOTOR

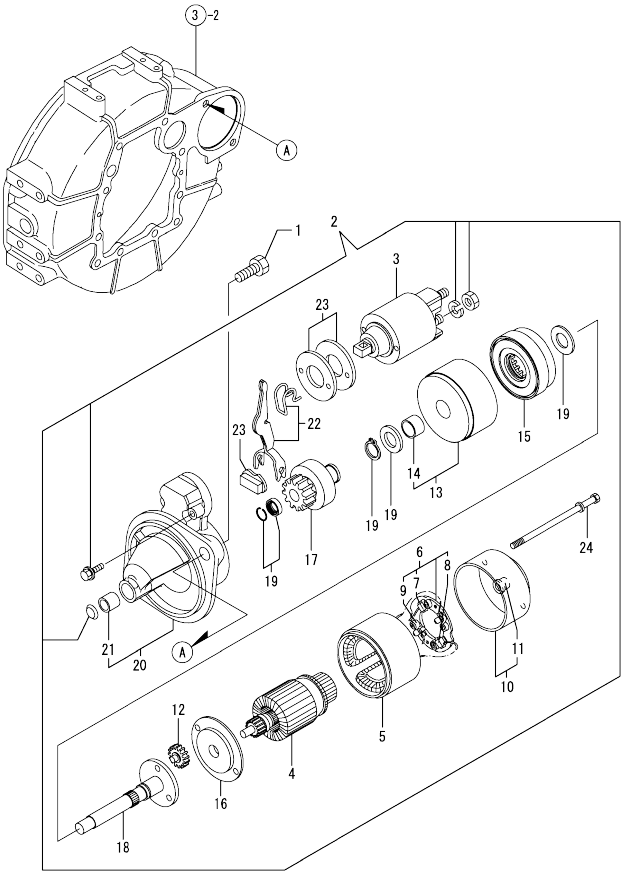

(A)=3TNV88-SSU (D)=
(B)= (E)=
(C)= (F)=

No.	Lev.	Parts No.	Description	Q'ty (A)	(B)	(C)	(D)	(E)	(F)	I	R
1	1	26116-120252	BOLT, M12X 25 PLATED	2							
2	1	129242-77010	STARTER	1							
3	2	129698-77020	MAGNETIC SWITCH ASSY	1							
4	2	129242-77100	ARMATURE ASSY	1							
5	2	129242-77110	YOKE ASSY	1							
6	2	129242-77120	BRUSH HOLDER ASSY	1							
7	3	129242-77130	BRUSH(-)	2							
8	3	129242-77140	BRUSH(+) SET	1							
9	3	129242-77150	BRUSH SPRING	4							
10	2	129242-77160	REAR COVER ASSY	1							
11	3	129242-77170	REAR COVER METAL	1							
12	2	118400-77170	GEAR	3							
13	2	129242-77180	CENTER BRACKET(P)	1							
14	3	129698-77190	BRACKET	1							
15	2	129698-77200	GEAR, INTERNAL	1							
16	2	129242-77210	CENTER BRACKET(A)	1							
17	2	129698-77220	PINION ASSY	1							
18	2	129698-77230	SHAFT(PINION	1							
19	2	129698-77250	WASHER SET	1							
20	2	129242-77260	GEAR CASE ASSY	1							
21	3	X2114535200	METAL, STARTER	1							
22	2	129242-77270	SHIFT LEVER SET	1							
23	2	129242-77280	DUST COVER KIT	1							
24	2	124195-77770	THROUGH BOLT	2							

N:Old ←Yes/No→ New. Q:Old ←No/Yes→ New. R:Old ←Yes/Yes→ New. S:Old ←No/No→ New. W:Add. Z:Discontinued. F:Interchangeable by set. K:Q'ty Change

Copyright (C) YANMAR CO., LTD. All RightsReserved.

0CW10-M11400

Fig.16. GENERATOR

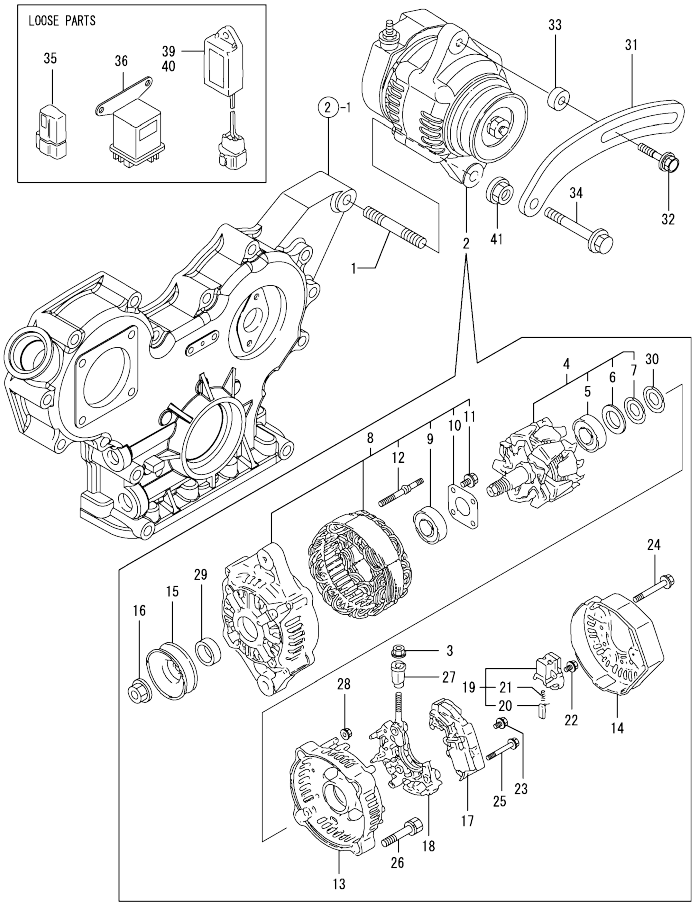

(A)=3TNV88-SSU (D)=
(B)= (E)=
(C)= (F)=

No.	Lev.	Parts No.	Description	Q'ty (A)	(B)	(C)	(D)	(E)	(F)	I	R
1	1	129795-01900	STUD	1							
2	1	129423-77200	GENERATOR, 12V-40A	1							
3	2	X9490561001	NUT	1							
4	2	119620-77380	ROTOR ASSY	1							
5	3	119620-79240	BALL BEARING	1							
6	3	119620-79250	COVER, BEARING	1							
7	3	119620-79360	WASHER, THRUST	1							
8	2	119620-77421	FRAME ASSY, DRIVE	1							
9	3	119620-79200	BALL BEARING	1							
10	3	119620-79210	PLATE	1							
11	3	119620-79220	SCREW	4							
12	3	119620-79230	BOLT, STUD	2							
13	2	119620-77440	FLAME ASSY, REAR	1							
14	2	129240-79300	COVER	1							
15	2	119620-77461	PULLEY	1							
16	2	119620-77471	NUT	1							
17	2	129423-77710	REGULATOR ASSY	1							
18	2	119620-79260	HOLDER	1							
19	2	119620-79270	HOLDER, BRUSH	1							
20	3	119620-77480	BRUSH ASSY	2							
21	3	119620-79280	SPRING	2							
22	2	119620-79290	SCREW	1							
23	2	119620-79300	SCREW	1							
24	2	119620-79310	BOLT	3							
25	2	119620-79320	SCREW W/WASHER	2							
26	2	119620-79330	BOLT	2							
27	2	119620-79340	INSULATION BUSH	1							
28	2	119620-79350	NUT	2							
29	2	119620-77490	COLLAR	1							
30	2	119620-79360	WASHER, THRUST	1							
31	1	119802-77330	ADJUSTER	1							
32	1	129972-77341	BOLT, ADJUSTER L=50	1							
33	1	119940-77270	SPACER, GENERATOR	1							
34	1	26106-080452	BOLT, M8X 45 PLATED	1							
35	1	119643-66900	DIODE	1							
36	1	119650-77910	RELAY ASSY, GLOW	1							
39	1	128300-77920	TIMER	1							
40	1	129211-77920	TIMER	1							
41	1	26306-100002	NUT, M10	1							

N:Old ←Yes/No→ New. Q:Old ←No/Yes→ New. R:Old ←Yes/Yes→ New. S:Old ←No/No→ New. W:Add. Z:Discontinued. F:Interchangeable by set. K:Q'ty Change

Copyright (C) YANMAR CO., LTD. All RightsReserved.

0CW10-M11400

Fig.17. GASKET SET

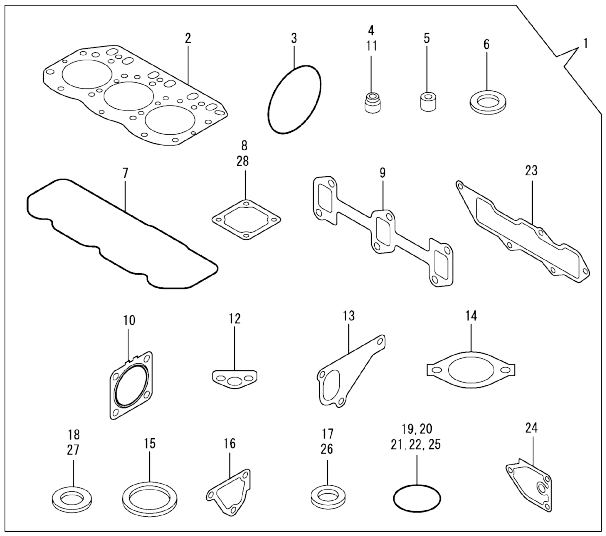

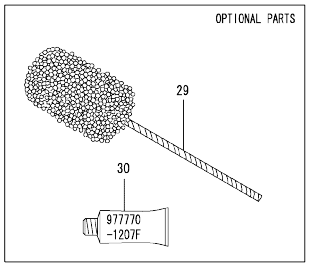

(A)=3TNV88-SSU (D)=
(B)= (E)=
(C)= (F)=

No.	Lev.	Parts No.	Description	Q'ty (A)	(B)	(C)	(D)	(E)	(F)	I	R
1	1	729150-92870	GASKET SET	1							1
2	2	129001-01340	GASKET, HEAD	1							
3	2	121850-51960	O-RING	1							
4	2	124460-11340	SEAL, VALVE STEM	3							
5	2	119802-11870	PROTECTOR, NOZZLE	3							
6	2	119625-11880	SEAT, NOZZLE	3							
7	2	129004-11310	GASKET, BONNET	1							
8	2	129150-77511	GASKET	1							
9	2	129150-13110	GASKET	1							
10	2	129004-13200	GASKET, SILENCER	1							
11	2	121400-11340	SEAL, VALVE STEM	3							
12	2	129150-35042	GASKET	1							
13	2	129486-42021	GASKET, WATER PUMP	1							
14	2	129795-49551	GASKET	1							
15	2	129150-49811	GASKET, THERMOSTAT	1							
16	2	124395-49840	GASKET	1							
17	2	22190-080002	WASHER, SEAL 6	2							
18	2	124465-44950	GASKET, 16	2							
19	2	24311-000120	O-RING, 1AP12.0	3							
20	2	24311-000320	O-RING, 1AP32.0	2							
21	2	24341-000240	O-RING, 1AS24.0	1							
22	2	129486-42140	O-RING, G30	1							
23	2	129001-12110	GASKET, MANIFOLD	1							
24	2	129150-35111	GASKET	1							
25	2	119609-32040	O-RING, P16	4							
26	2	22190-100002	WASHER, SEAL 10	2							
27	2	23414-080000	GASKET, 8X1.0	1							
28	2	129100-77510	GASKET, AIR HEATER	1							
29	1	129400-92430	HONE	1							1
30	1	977770-1207F	GASKET.LIQUID	1							1

Remarks
(1) OPTIONAL PARTS.

N:Old ←Yes/No→ New. Q:Old ←No/Yes→ New, R:Old ←Yes/Yes→ New, S:Old ←No/No→ New. W:Add. Z:Discontinued. F:Interchangeable by set. K:Q'ty Change

Copyright (C) YANMAR CO., LTD. All RightsReserved.

Parts No. Index

Parts No.	Fig. No.	Ref. No.
105025-59750	14	9
105025-59760	14	6
114250-39450	9	6
114250-53080	13	5
114250-53120	13	10
114250-53130	13	11
114250-53140	13	12
114250-53210	13	13
114250-53400	13	14
118400-77170	15	12
119005-35151	9	19
		22
119131-18320	6	3
119140-12680	5	21
119225-52102	14	10
119593-59581	13	50
119609-32040	2	17
	17	25
119620-01750	3	4
119620-77380	16	4
119620-77421	16	8
119620-77440	16	13
119620-77461	16	15
119620-77471	16	16
119620-77480	16	20
119620-77490	16	29
119620-79200	16	9
119620-79210	16	10
119620-79220	16	11
119620-79230	16	12
119620-79240	16	5
119620-79250	16	6
119620-79260	16	18
119620-79270	16	19
119620-79280	16	21
119620-79290	16	22
119620-79300	16	23
119620-79310	16	24
119620-79320	16	25
119620-79330	16	26
119620-79340	16	27
119620-79350	16	28
119620-79360	16	7
		30
119625-11880	4	32
	17	6
119640-01640	3	10
119643-66900	16	35
119650-77910	16	36
119653-77950	12	96

Parts No.	Fig. No.	Ref. No.
119660-61901	12	59
119802-01520	2	12
119802-01561	2	13
119802-03110	4	43
119802-03121	4	44
119802-03130	4	45
119802-03141	4	46
119802-11260	4	6
119802-11270	4	7
119802-11280	4	8
119802-11870	4	55
	17	5
119802-21202	8	5
119802-25051	7	10
119802-25071	7	14
119802-25101	7	11
119802-25901	7	17
119802-32070	2	8
119802-32100	2	7
119802-32111	2	18
119802-32120	2	19
119802-32130	2	20
119802-35100	9	15
119802-39450	9	8
119802-49113	10	10
119802-49730	10	37
119802-51090	11	80
119802-51250	11	133
119802-51560	11	52
119802-51590	11	58
119802-51600	11	59
119802-51680	11	63
119802-51690	11	64
119802-55700	14	11
119802-55710	14	12
119802-59550	13	44
119802-59560	13	46
119802-77330	16	31
119807-61420	12	22
119808-12520	5	14
		18
119808-12540	5	19
119865-21600	8	15
119866-12541	5	20
119910-12510	5	17
119910-12610	5	16
119934-01800	2	6
119934-59910	11	130
119940-55690	14	16
119940-77270	16	33

Parts No.	Fig. No.	Ref. No.
120130-11860	4	19
120270-54410	4	34
121023-01551	2	28
121111-21501	8	12
121400-11340	4	28
	17	11
121450-42450	10	31
121520-34810	9	2
121550-23200	8	29
121850-21680	8	11
121850-42410	10	8
121850-51960	2	21
	17	3
123900-13610	6	5
123900-13630	6	4
124060-01050	1	5
124060-77680	13	51
124160-01751	2	14
	4	39
124160-01910	1	7
		8
124160-11360	4	52
124160-39140	9	7
124195-77770	15	24
124240-01871	2	15
124395-49840	10	17
	17	16
124460-11340	4	29
	17	4
124465-44950	10	33
	17	18
124722-59050	10	38
		41
	13	45
		48
124766-59050	14	5
		8
128300-77920	16	39
129001-01250	1	6
129001-01340	1	33
	17	2
129001-02931	1	25
129001-12110	5	5
	17	23
129001-32330	2	11
129001-91841	2	22
129004-01190	1	31
129004-03010	4	41
129004-03080	5	1
129004-11130	4	24

Parts No.	Fig. No.	Ref. No.
129004-11241	4	3
129004-11251	4	4
129004-11310	4	49
	17	7
129004-11350	4	40
129004-11650	4	10
129004-11700	4	15
129004-11900	4	33
129004-12100	5	3
129004-13129	6	1
129004-13200	6	7
	17	10
129004-21002	8	1
129004-21650	8	9
129004-34802	9	1
129004-42001	10	1
129004-42040	10	15
129004-49610	10	35
129004-49620	10	39
129004-49711	10	36
129004-49721	10	40
129004-53001	13	2
129004-55612	14	1
129004-59811	13	31
129004-59821	13	35
129004-59831	13	39
129005-22080	8	16
129005-22500	8	18
129005-22900	8	34
129005-22950	8	36
129005-59830	9	9
129030-44760	10	23
129051-12530	5	15
		22
129100-01580	3	1
		17
	8	2
129100-01640	3	18
129100-01730	3	7
129100-11112	4	25
129100-23910	8	28
129100-35140	9	17
129100-35301	9	4
129100-42051	10	3
129100-42121	10	4
129100-55690	14	13
129100-77500	5	9
129100-77510	5	10
	17	28
129128-21590	8	13

Parts No. Index

Parts No.	Fig. No.	Ref. No.
129129-14580	7	3
129136-01780	3	9
129150-01200	1	32
129150-02020	1	10
129150-02450	7	4
129150-02871	1	34
129150-02931	1	28
129150-02941	1	37
129150-03070	4	42
129150-11230	4	11
129150-11280	4	9
129150-11370	4	14
129150-11750	4	13
129150-11810	4	21
129150-13110	6	2
	17	9
129150-14101	7	7
129150-14200	7	1
129150-14400	7	2
129150-23601	8	30
129150-23611	8	32
129150-25301	7	16
129150-35042	9	3
	17	12
129150-35111	9	18
	17	24
129150-49811	10	26
	17	15
129150-59120	13	26
129150-59131	13	29
129150-77511	5	11
	17	8
129155-42350	10	20
129155-49801	10	25
129155-51280	12	5
129155-61460	12	24
129202-22300	8	22
129210-59070	14	4
129210-59130	14	7
129211-77920	16	40
129240-13550	6	8
129240-79300	16	14
129242-77010	15	2
129242-77100	15	4
129242-77110	15	5
129242-77120	15	6
129242-77130	15	7
129242-77140	15	8
129242-77150	15	9
129242-77160	15	10

Parts No.	Fig. No.	Ref. No.
129242-77170	15	11
129242-77180	15	13
129242-77210	15	16
129242-77260	15	20
129242-77270	15	22
129242-77280	15	23
129255-61410	12	21
129350-49530	10	27
129400-92430	17	29
129410-03990	5	2
129418-32320	2	10
129423-77200	16	2
129423-77710	16	17
129486-01670	3	21
129486-42021	10	14
	17	13
129486-42140	10	16
	17	22
129486-59551	13	47
129612-01600	3	2
129612-12650	5	23
129642-61060	12	97
129655-44740	10	22
129698-77020	15	3
129698-77190	15	14
129698-77200	15	15
129698-77220	15	17
129698-77230	15	18
129698-77250	15	19
129795-01780	3	20
129795-01900	16	1
129795-01950	2	16
129795-02412	1	13
129795-11120	4	26
129795-11180	4	27
129795-21661	8	10
129795-49551	10	28
	17	14
129900-07900	4	1
129900-32130	2	9
129907-55801	14	2
		18
129916-49740	10	13
129972-77341	16	32
158552-51151	7	18
158552-51570	11	53
		54
158552-51580	11	57
158552-51600	11	67
158552-51670	11	4

Parts No.	Fig. No.	Ref. No.
158552-51780	11	101
158552-51781	11	101 -1
158552-52100	11	107
158552-52310	11	109
158552-52400	11	119
158552-52500	11	108
158552-61441	12	23
158552-61900	12	82
158553-51551	11	50
158553-51630	11	68
158553-51640	11	70
158553-51660	11	72
158553-51670	11	62
158553-51680	11	73
158553-51770	11	123
158553-61050	12	2
158553-61070	12	3
158557-51570	11	55
158560-51300	11	38
158563-51281	11	36
		37
158563-51330	11	46
158600-51270	11	35
158601-51340	11	47
158601-51550	11	51
158601-51570	11	56
158601-51650	11	71
158601-51770	11	100
158601-51790	11	102
171051-01921	1	9
171056-49120	9	21
171340-77520	5	12
22190-080002	9	11
		12
	17	17
22190-100002	9	13
	17	26
22190-120000	12	63
22190-120002	11	103
		110
		132
22190-180002	11	104
		112
22190-220002	3	12
22217-140000	7	19
	11	113
22252-000260	8	23
22312-050140	11	114
22351-030010	8	8
22351-050010	11	115

Parts No.	Fig. No.	Ref. No.
22351-060012	4	35
22512-070140	7	8
	8	6
22857-500100	4	50
		51
23414-080000	10	30
	17	27
23857-030000	9	10
23876-010000	10	11
23876-020000	10	12
23876-030000	2	4
23876-040000	2	5
23887-120002	11	105
	12	65
24311-000070	11	118
24311-000120	4	53
	17	19
24311-000160	14	15
24311-000320	2	23
	4	54
	17	20
24321-000650	14	14
24341-000240	2	29
	17	21
24356-010180	11	120
24356-010200	11	65
		121
24372-000150	11	66
25132-003700	10	21
26106-060102	11	122
	12	53
		67
26106-060142	12	83
		84
26106-060162	2	30
26106-060202	12	85
26106-060502	10	24
26106-080122	10	34
26106-080142	7	9
26106-080162	2	24
		25
	3	14
	4	2
	10	18
	11	134
26106-080202	5	6
	9	20
	11	135
26106-080222	10	29
26106-080252	3	15

Parts No. Index

Parts No.	Fig. No.	Ref. No.
26106-080252	4	36
	14	17
26106-080302	14	3
26106-080352	3	13
	4	37
	9	5
26106-080402	5	13
	7	15
26106-080452	3	16
		16 -1
	10	32
	16	34
26106-080502	3	22
	4	38
26106-080552	2	26
26106-080602	10	19
26106-080802	5	7
		8
26106-100202	6	9
26116-120252	15	1
26206-100252	3	5
26206-100302	3	6
26306-080002	2	27
	6	6
		10
26306-100002	16	41
26366-060002	9	14
26450-080452	11	127
26756-060002	12	68
26776-140002	7	20
	11	128
27241-120000	1	14
27241-300000	1	15
27241-400000	4	23
27310-080001	4	30
729005-01562	1	1
729150-92870	17	1
729233-01500	2	1
729245-51440	11	1
729245-53100	13	1
729402-23100	8	24
977770-1207F	2	31
	3	3
	4	56
	17	30
X2114535200	15	21
X9490561001	16	3

Parts No.	Fig. No.	Ref. No.

Parts No.	Fig. No.	Ref. No.

Parts No.	Fig. No.	Ref. No.