YANMAR

PARTS CATALOG

0CW10-M03800EN

Last update Sep., 2019

PREFACE

1.This Parts Catalog carries all parts incorporated in YANMAR Model 3TNV88-XAT engine manufactured since June, 2005.

2.Each illustration corresponds to the parts list on the following page.

3.When ordering parts,clearly write down the engine model and serial number,as well as the name and number of each part in your order sheet. This will help insure reliable delivery of the parts you have ordered.

Directions for the Parts Catalog.

1.The parts stipulated in this Parts Catalog are not necessarily standard equipped parts.
2.Parts may change without prior notice.
3.The following is an example of the Parts Catalog format.

0CF10-G21601 29. FUEL INJECTION PUMP(W/BOOST)

(A)=4JH-DT
(B)=4JH-DTZ
(C)=4JH-DTZP
(D)=4JH-DTZA
(E)=4JH-DTZY
(F)=

① REF.	② LEV.	PARTS NO.	DESCRIPTION	Q'TY (A)	(B)	(C)	(D)	(E)	(F)	③ I	⑤ R
1	1	729595-51390	FUEL INJECTION PUMP	1	1	1	1	1			1
1-1	1	729595-51391	FUEL INJECTION PUMP	1	1	1	1	1		N	1
	(A=E00185)	(B=E00200)									
3	2	26022-060162	SCREW M 6X 16	9	9	9	9	9			
3-1 ④	2	26022-060162	SCREW M 6X 16	4	4	4	4	4		K	
	(A=E00156)	(B=E00156)	(C=E00156) (D=E00156)	(E=E00156)							
4	2	129470-51040	CAMSHAFT	1	1	1	1	1			
5	2	122710-51050	BEARING, ROLLER	2	2	2	2	2			
6	2	129470-51060	RETAINER	1	1	1	1	1			

Remarks
(1) BOOST COMPEMSATOR TYPE. OPTIONAL
PART, TO E00155,(4JH-DT, 4JH-DTZ

① Ref. No.

The Ref. No. listed may not be in accordance with the illustration Ref. No.

(Ex.) Illustration No. 1 List Ref No. 1 (Before change) → 1- 1 (After change)

For interchangeable symbols N, R and K, illustrations for new parts may be abbreviated.

② Lev. (Level)

Level indication
The numbers below indicate the level of relativity towards the main part.
1 ----- Main parts (Assembly parts)
2 ----- Sub component included in " 1 ".
3 ----- Sub component included in " 2 ".
Note) Parts that are not for sale are partially illustrated but not listed.

③ Interchangeability Mark

When a part change takes place, one of the following interchangeability symbols is indicated beside the part.

Symbol	Interchangeability	Contents note
N	Old ← Yes / No → New	New Part is interchangeable for Old Part but Old Part is not interchangeable for New Part.
Q	Old ← No / Yes → New	New Part is not interchangeable for Old Part but Old Part is interchangeable for New Part.
R	Old ← Yes / Yes → New	New/ Old Parts are both interchangeable.
S	Old ← No / No → New	New/ Old Parts are both not interchangeable.
W		Part newly added.
Z		Part discontinued.
F		Not interchangeable by a single part but interchangeable together with related parts.
K		Changes only for used parts quantities.

④ Effective Machine No.

When a part changes, the effective Machine No. will be indicated in the (A)-(F) column.

Product Symbol	Product No.	Product Symbol	Product No.
C	Clutch No. Compressor No.	F	Machine No. (Agricultural Equip.)
D	Drive No.	M	Machine No.
E	Engine No.		

Note 1) A date may follow the symbol. (Ex.) 1996.01
Note 2) " XXXXX " and " ZZZZZ " are for parts that could not be predicted or for engine models that could not be identified.
Note 3) (A=E00185) is the E (Engine Serial Number) for the column (A) model (in this case 4JH-DT) after the parts design change.

⑤ Remarks Mark

Figures or alphabets (symbols) are entered in the remarks column.
The comments (remarks) on parts that are indicated at the bottom of the illustration are the same symbols as those stated above.

Contents

0CW10-M03800

Fig. No.	Fig. Name
ENGINE	
1.	CYLINDER BLOCK
2.	GEAR HOUSING
3.	OIL SUMP
4.	CYLINDER HEAD & BONNET
5.	SUCTION MANIFOLD
6.	EXHAUST MANIFOLD
7.	CAMSHAFT & DRIVING GEAR
8.	CRANKSHAFT & PISTON
9.	LUB.OIL SYSTEM
10.	COOLING WATER SYSTEM
11.	FUEL INJECTION PUMP
12.	GOVERNOR
13.	FUEL INJECTION VALVE
14.	STARTING MOTOR
15.	GASKET SET

Fig.1. CYLINDER BLOCK

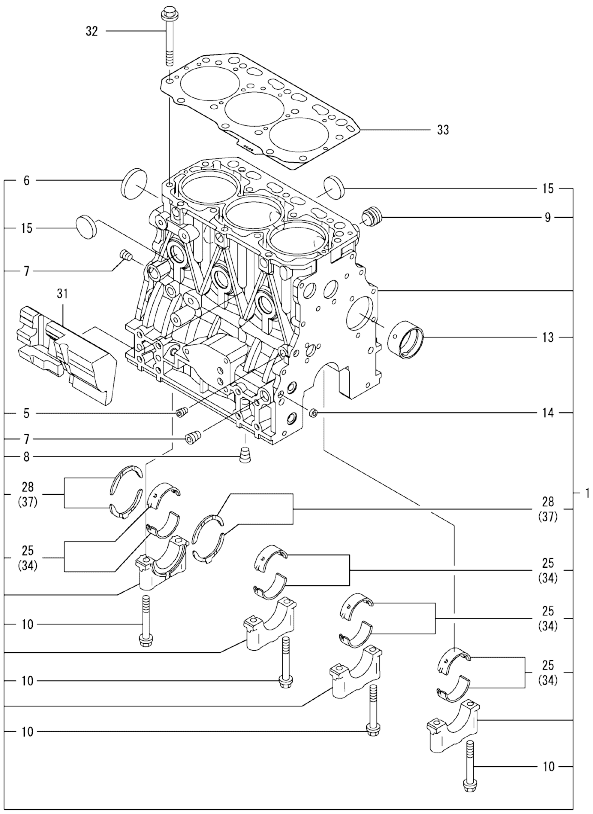

Remarks
(1) UNDER-SIZE(U.S=0.25)PART.
(2) OVER-SIZE(O.S=0.25)PART.
(3) REPAIR PART.

(A)=3TNV88-XAT
(B)=
(C)=
(D)=
(E)=
(F)=

No.	Lev.	Parts No.	Description	Q'ty (A)	(B)	(C)	(D)	(E)	(F)	I	R
1	1	729005-01560	BLOCK ASSY, CYLINDER	1							
5	2	124060-01050	PLUG, PT1/8	1							
6	2	129001-01250	PLUG, 50	1							
7	2	124160-01910	PLUG, PT1/4	2							
8	2	124160-01910	PLUG, PT1/4	1							
9	2	171051-01921	PLUG, NPTF1	1							
10	2	129150-02020	BOLT, METAL CAP	8							
13	2	129795-02411	BUSH, CAMSHAFT	1							
14	2	27241-120000	PLUG, 12	2							
15	2	27241-300000	PLUG 30	6							
25	2	129001-02930	BEARING, MAIN	4							3
28	2	129150-02930	BEARING, THRUST	2							
31	1	129004-01190	SPACER	1							
32	1	129150-01200	BOLT, HEAD	14							
33	1	129001-01340	GASKET, HEAD	1							
34	1	129150-02870	BEARING, 0.25 US	4							1
37	1	129150-02940	BEARING, THRUST 0.25	1							2

N:Old ←Yes/No→ New. Q:Old ←No/Yes→ New, R:Old ←Yes/Yes→ New, S:Old ←No/No→ New, W:Add, Z:Discontinued, F:Interchangeable by set, K:Q'ty Change

Copyright (C) YANMAR CO., LTD. All RightsReserved.

Fig.2. GEAR HOUSING

(A)=3TNV88-XAT
(B)=
(C)=
(D)=
(E)=
(F)=

No.	Lev.	Parts No.	Description	Q'ty (A)	(B)	(C)	(D)	(E)	(F)	I	R
1	1	729004-01500	CASE ASSY, GEAR	1							
4	2	23876-030000	PLUG, R03	1							
5	2	23876-040000	PLUG, R04	1							
6	2	129795-01800	SEAL, OIL	1							
7	1	119802-32100	COVER ASSY	1							
8	2	119802-32070	COVER	1							
9	2	129900-32130	VALVE, RELIEF	1							
10	2	129418-32320	SPRING	1							
11	2	129001-32330	PLUG	1							
12	1	129004-01520	FLANGE, GEAR CASE	1							
13	1	119802-01560	STUD, M8X25	3							
14	1	124160-01751	COVER, FILLER	1							
15	1	124240-01871	COVER	1							
16	1	129795-01950	PIPE, KNOCK L=18	2							
17	1	119609-32040	O-RING, P16	4							
18	1	119802-32111	ROTOR, INNER	1							
19	1	119802-32120	ROTOR, OUTER	1							
20	1	119802-32130	SCREW, M6X16	7							
21	1	121850-51960	O-RING	1							
22	1	129001-91841	BOLT, M8X85	3							
23	1	24311-000320	O-RING, 1AP32.0	1							
24	1	26106-080162	BOLT, M8X 16 PLATED	4							
25	1	26106-080162	BOLT, M8X 16 PLATED	3							
26	1	26106-080552	BOLT, M8X 55 PLATED	11							
27	1	26306-080002	NUT, M8	3							
28	1	121023-01550	COVER	1							
29	1	24341-000240	O-RING, 1AS24.0	1							
30	1	26106-060162	BOLT, M6X 16 PLATED	2							
31	1	977770-1207F	GASKET.LIQUID	1							1
32	1	129150-01580	STUD, M8X30	1							
33	1	124240-01871	COVER	1							
34	1	124240-01883	GASKET	1							
35	1	26106-080122	BOLT, M8X 12 PLATED	4							

Remarks
(1) OPTIONAL PART.

N:Old ←Yes/No→ New. Q:Old ←No/Yes→ New. R:Old ←Yes/Yes→ New. S:Old ←No/No→ New. W:Add. Z:Discontinued. F:Interchangeable by set. K:Q'ty Change

Copyright (C) YANMAR CO., LTD. All RightsReserved.

Fig.3. OIL SUMP

(A)=3TNV88-XAT
(B)=
(C)=
(D)=
(E)=
(F)=

No.	Lev.	Parts No.	Description	Q'ty (A)	(B)	(C)	(D)	(E)	(F)	I	R
1	1	129126-01550	SUMP ASSY, OIL	1							
2	2	129129-01540	COVER ASSY, OIL SUMP	1							
3	3	105425-01690	PLUG, 16	1							
5	3	22190-160002	WASHER, SEAL 16	1							
6	2	129126-01700	SUMP, OIL	1							
8	2	26106-080122	BOLT, M8X 12 PLATED	8							
9	1	129001-91841	BOLT, M8X85	14							
10	1	129001-91910	BOLT, M8X120	4							
11	1	26106-080252	BOLT, M8X 25 PLATED	4							
12	1	129100-01580	PIN, M8X16	2							
13	1	129100-01640	CASE ASSY, OIL SEAL	1							
15	2	129795-01780	SEAL, OIL	1							
16	1	129486-01670	BOLT, M8X30	9							
17	1	977770-1207F	GASKET.LIQUID	1							1

Remarks
(1) OPTIONAL PART.

N:Old ←Yes/No→ New. Q:Old ←No/Yes→ New. R:Old ←Yes/Yes→ New. S:Old ←No/No→ New. W:Add. Z:Discontinued. F:Interchangeable by set. K:Q'ty Change

Copyright (C) YANMAR CO., LTD. All RightsReserved.

Fig.4. CYLINDER HEAD & BONNET

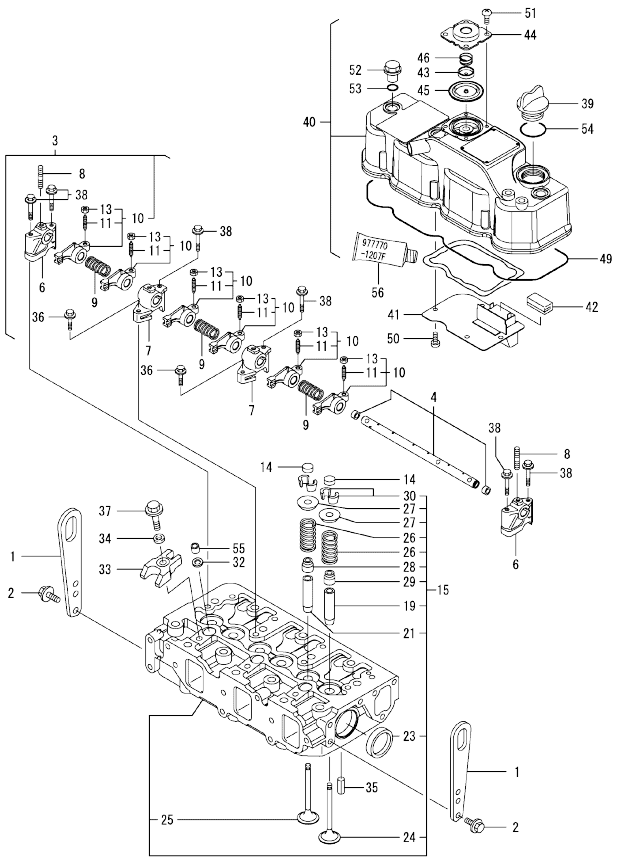

Remarks
(1) REPAIR PART.
(2) OPTIONAL PART.

(A)=3TNV88-XAT
(B)=
(C)=
(D)=
(E)=
(F)=

No.	Lev.	Parts No.	Description	Q'ty (A)	(B)	(C)	(D)	(E)	(F)	I	R
1	1	129900-07900	LIFTER, ENGINE	2							
2	1	26106-080162	BOLT, M8X 16 PLATED	4							
3	1	129004-11241	SHAFT ASSY, ROCKER	1							
4	2	129004-11251	SHAFT, ROCKER ARM	1							
6	2	119802-11260	SUPPORT, ROCKER ARM	2							
7	2	119802-11270	SUPPORT, ROCKER ARM	2							
8	2	119802-11280	BOLT, STUD	3							
9	2	129150-11280	SPRING, ROCKER	3							
10	2	129004-11650	ARM ASSY, ROCKER	6							
11	3	129150-11230	SCREW, VALVE ADJUST	6							
13	3	129150-11750	NUT, M8	6							
14	1	129150-11370	CAP, VALVE	6							
15	1	129004-11700	HEAD ASSY, CYLINDER	1							
19	2	120130-11860	GUIDE, VALVE	3							1
21	2	129150-11810	GUIDE, VALVE	3							1
23	2	27241-400000	PLUG, 40	2							
24	2	129004-11101	VALVE, SUCTION	3							
25	2	129100-11111	VALVE, EXHAUST	3							
26	2	129795-11120	SPRING, VALVE	6							
27	2	129795-11180	RETAINER, SPRING	6							
28	2	121400-11340	SEAL, VALVE STEM	3							
29	2	124460-11340	SEAL, VALVE STEM	3							
30	2	27310-080001	COTTER, 8	6							
32	1	119625-11880	SEAT, NOZZLE	3							
33	1	129004-11900	RETAINER, NOZZLE	3							
34	1	120270-54410	WASHER, INJECTOR	3							
35	1	22351-060012	PIN, SPRING 6.0X12	2							
36	1	26106-080252	BOLT, M8X 25 PLATED	2							
37	1	26106-080352	BOLT, M8X 35 PLATED	3							
38	1	26106-080502	BOLT, M8X 50 PLATED	6							
39	1	124160-01751	CAP, FILLER	1							
40	1	129004-11350	BONNET ASSY, HEAD	1							
40-1	1	129236-11350	BONNET ASSY	1							N
	(A=E139585)										
41	2	129004-03010	PLATE, BAFFLE	1							
42	2	129150-03070	BAFFLE, BREATHER	1							
43	2	119802-03110	PLATE, DIAPHRAGM	1							
44	2	119802-03121	COVER, DIAPHRAGM	1							
44-1	2	129236-03120	COVER, DIAPHARAGM	1							N
	(A=E139585)										
45	2	119802-03130	DIAPHRAGM	1							
46	2	119802-03141	SPRING, DIAPHRAGM	1							
49	2	129004-11310	GASKET, BONNET	1							
50	2	22857-500100	SCREW, 5X10	4							
51	2	22857-500100	SCREW, 5X10	4							
52	1	124160-11360	KNOB	3							
53	1	24311-000120	O-RING, 1AP12.0	3							
54	1	24311-000320	O-RING, 1AP32.0	1							
55	1	119802-11870	PROTECTOR, NOZZLE	3							
56	1	977770-1207F	GASKET.LIQUID	1							2

N:Old ←Yes/No→ New. Q:Old ←No/Yes→ New. R:Old ←Yes/Yes→ New. S:Old ←No/No→ New. W:Add. Z:Discontinued. F:Interchangeable by set. K:Q'ty Change

Copyright (C) YANMAR CO., LTD. All RightsReserved.

Fig.5. SUCTION MANIFOLD

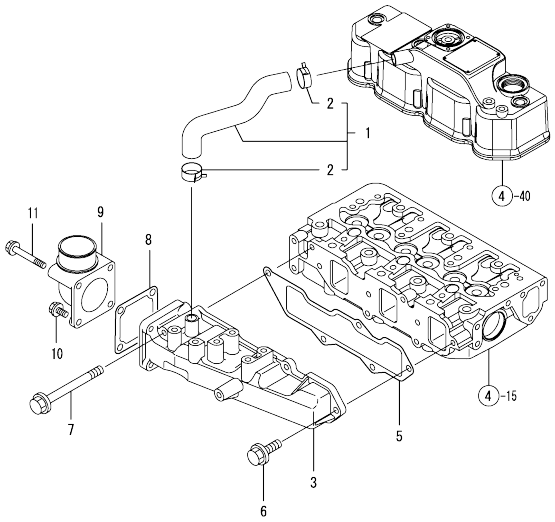

(A)=3TNV88-XAT
(B)=
(C)=
(D)=
(E)=
(F)=

No.	Lev.	Parts No.	Description	Q'ty (A)	(B)	(C)	(D)	(E)	(F)	I	R
1	1	129004-03080	PIPE , BREATHER	1							
2	2	129410-03990	CLAMP 22	2							
3	1	129004-12100	MANIFOLD, AIR INTAKE	1							
5	1	129001-12110	GASKET, MANIFOLD	1							
6	1	26106-080202	BOLT, M8X 20 PLATED	4							
7	1	26106-080802	BOLT, M8X 80 PLATED	1							
8	1	129150-77511	GASKET	1							
9	1	171340-77520	BEND	1							
10	1	26106-080252	BOLT, M8X 25 PLATED	2							
11	1	26106-080652	BOLT, M8X 65 PLATED	2							

N:Old ◄Yes/No► New. Q:Old ◄No/Yes► New. R:Old ◄Yes/Yes► New. S:Old ◄No/No► New. W:Add. Z:Discontinued. F:Interchangeable by set. K:Q'ty Change

Copyright (C) YANMAR CO., LTD. All RightsReserved.

Fig.6. EXHAUST MANIFOLD

(A)=3TNV88-XAT
(B)=
(C)=
(D)=
(E)=
(F)=

No.	Lev.	Parts No.	Description	Q'ty (A)	(B)	(C)	(D)	(E)	(F)	I	R
1	1	171350-13100	MANIFOLD, EXHAUST	1							
2	1	129150-13110	GASKET	1							
3	1	123900-13630	BOLT, M8X80	4							
4	1	119131-18320	STUD, M8X22	4							
5	1	123900-13610	STUD, M8X80	2							
6	1	26306-080002	NUT, M8	2							
7	1	129004-13200	GASKET, SILENCER	1							

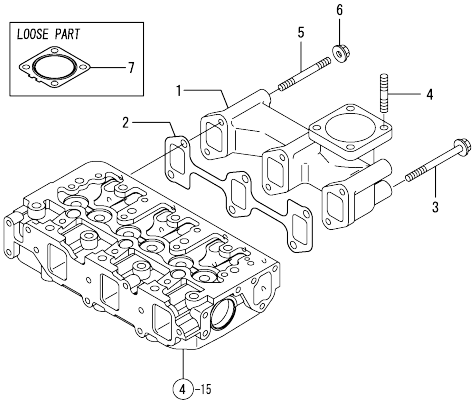

N:Old ◄Yes/No► New. Q:Old ◄No/Yes► New. R:Old ◄Yes/Yes► New. S:Old ◄No/No► New. W:Add. Z:Discontinued. F:Interchangeable by set. K:Q'ty Change

Copyright (C) YANMAR CO., LTD. All RightsReserved.

Fig.7. CAMSHAFT & DRIVING GEAR

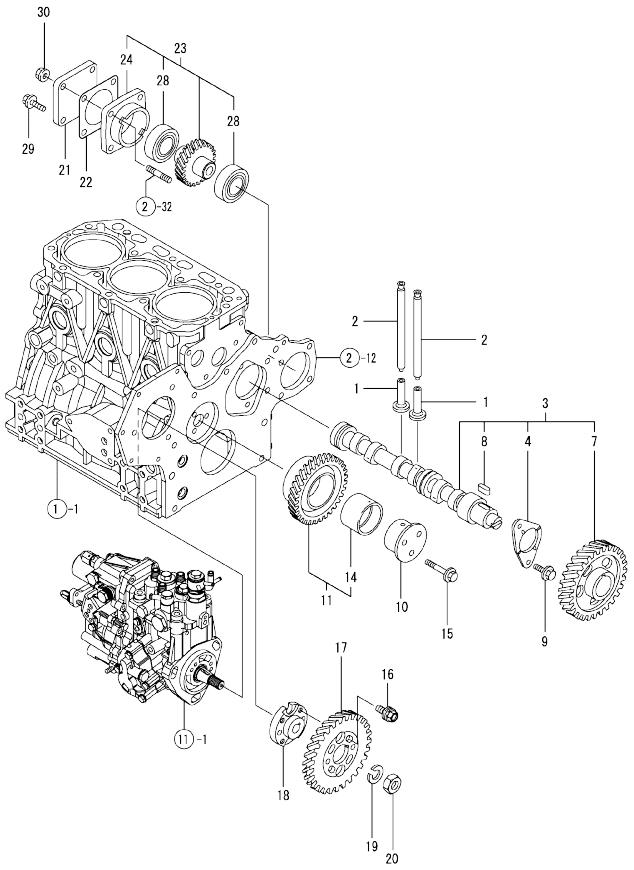

(A)=3TNV88-XAT
(B)=
(C)=
(D)=
(E)=
(F)=

No.	Lev.	Parts No.	Description	Q'ty (A)	(B)	(C)	(D)	(E)	(F)	I	R
1	1	129150-14200	TAPPET	6							
2	1	129150-14400	ROD, PUSH L=178	6							
3	1	129129-14580	CAMSHAFT ASSY	1							
4	2	129150-02450	BEARING, THRUST	1							
7	2	129150-14101	GEAR, CAMSHAFT	1							
8	2	22512-070140	KEY, 7X 14	1							
9	1	26106-080142	BOLT, M8X 14 PLATED	2							
10	1	119802-25051	SHAFT, IDLE	1							
11	1	119802-25100	GEAR ASSY, IDLE	1							
14	2	119802-25070	BUSH, IDLE GEAR	1							1
15	1	26106-080402	BOLT, M8X 40 PLATED	3							
16	1	129150-25301	BOLT	4							
17	1	119802-25901	GEAR, PUMP	1							
18	1	158552-51151	FLANGE	1							
19	1	22217-140000	WASHER, SPRING 14	1							
20	1	26776-140002	NUT, LOCK M14	1							
21	1	124240-01871	COVER	1							
22	1	124240-01883	GASKET	1							
23	1	129555-26000	DRIVE ASSY, PUMP	1							
24	2	129150-26050	BRACKET, PUMP	1							
28	2	24105-060064	BEARING, BALL 6006Z	2							
29	1	26106-080252	BOLT, M8X 25 PLATED	3							
30	1	26306-080002	NUT, M8	1							

Remarks
(1) REPAIR PART.

N:Old ←Yes/No→ New. Q:Old ←No/Yes→ New. R:Old ←Yes/Yes→ New. S:Old ←No/No→ New. W:Add. Z:Discontinued. F:Interchangeable by set. K:Q'ty Change

Copyright (C) YANMAR CO., LTD. All RightsReserved.

Fig.8. CRANKSHAFT & PISTON

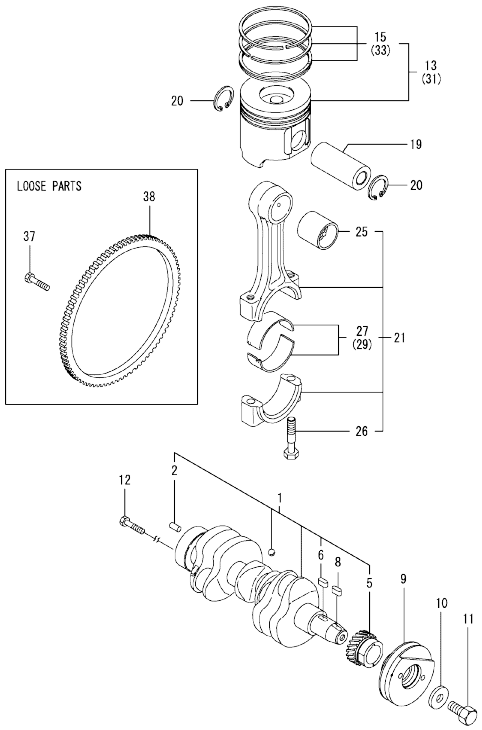

(A)=3TNV88-XAT (D)=
(B)= (E)=
(C)= (F)=

No.	Lev.	Parts No.	Description	Q'ty (A)	(B)	(C)	(D)	(E)	(F)	I	R
1	1	129004-21002	CRANKSHAFT ASSY	1							
2	2	129100-01580	PIN, M8X16	1							
5	2	119802-21202	GEAR, CRANKSHAFT	1							
6	2	22512-070140	KEY, 7X 14	1							
8	1	22512-070140	KEY, 7X 14	1							
9	1	129055-21650	V-PULLEY, 120	1							
10	1	129795-21661	WASHER	1							
11	1	121850-21680	BOLT	1							
12	1	121111-21501	BOLT, FLYWHEEL	6							
13	1	129005-22080	PISTON ASSY	3							
15	2	129005-22500	RING SET, PISTON	3							
19	1	129202-22300	PIN, PISTON D26 L70	3							
20	1	22252-000260	RING, 26	6							
21	1	729402-23100	ROD ASSY, CONNECTING	3							
25	2	129100-23910	BEARING, PISTON PIN	3							1
26	2	121550-23200	BOLT, CONNECTING ROD	6							
27	2	129150-23600	BEARING, CRANK PIN	3							
29	1	129150-23610	BEARING, 0.25 US	3							2
31	1	129005-22900	PISTON ASSY, 0.25 OS	3							3
33	2	129005-22950	RING SET, 0.25 OS	3							3
37	1	121111-21501	BOLT, FLYWHEEL	6							
38	1	124550-21600	GEAR, RING	1							

Remarks
(1) REPAIR PART.
(2) UNDER-SIZE(U.S=0.25)PART.
(3) OVER-SIZE(O.S=0.25)PART.

N:Old $\frac{\text{Yes}}{\text{No}}$ New. Q:Old $\frac{\text{No}}{\text{Yes}}$ New. R:Old $\frac{\text{Yes}}{\text{Yes}}$ New. S:Old $\frac{\text{No}}{\text{No}}$ New. W:Add. Z:Discontinued. F:Interchangeable by set. K:Q'ty Change

Copyright (C) YANMAR CO., LTD. All RightsReserved.

Fig.9. LUB.OIL SYSTEM

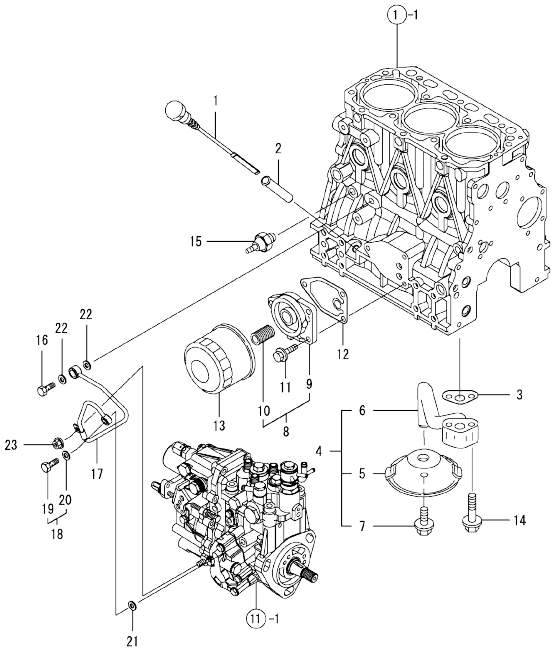

(A)=3TNV88-XAT
(B)=
(C)=
(D)=
(E)=
(F)=

No.	Lev.	Parts No.	Description	Q'ty (A)	(B)	(C)	(D)	(E)	(F)	I	R
1	1	129051-34820	DIPSTICK, OIL	1							
2	1	121520-34810	GUIDE, DIPSTICK	1							
3	1	129150-35042	GASKET	1							
4	1	129129-35090	PIPE ASSY, OIL INLET	1							
5	2	129129-35010	PIPE, OIL INLET	1							
6	2	129129-35080	PIPE, OIL INLET	1							
7	2	26106-080122	BOLT, M8X 12 PLATED	1							
8	1	119802-35100	BRACKET ASSY, FILTER	1							
9	2	119802-35110	BRACKET, FILTER	1							
10	2	129100-35140	STUD	1							
11	1	26106-080202	BOLT, M8X 20 PLATED	3							
12	1	129150-35111	GASKET	1							
13	1	129150-35153	FILTER 80X80L	1							1
14	1	26106-080352	BOLT, M8X 35 PLATED	2							
15	1	114250-39450	SWITCH, 0.5KG	1							
16	1	124160-39140	BOLT, PIPE JOINT M10	1							
17	1	119802-39450	PIPE ASSY, OIL	1							
18	1	129005-59830	BOLT ASSY, JOINT M8	1							
19	2	23857-030000	BOLT, JOINT 3	1							
20	2	22190-080002	WASHER, SEAL 6	1							
21	1	22190-080002	WASHER, SEAL 6	1							
22	1	22190-100002	WASHER, SEAL 10	2							
23	1	26366-060002	NUT, M6	1							

Remarks
(1) REPAIR PART.

N:Old ←Yes/No→ New. Q:Old ←No/Yes→ New. R:Old ←Yes/Yes→ New. S:Old ←No/No→ New. W:Add. Z:Discontinued. F:Interchangeable by set. K:Q'ty Change

Copyright (C) YANMAR CO., LTD. All RightsReserved.

Fig.10. COOLING WATER SYSTEM

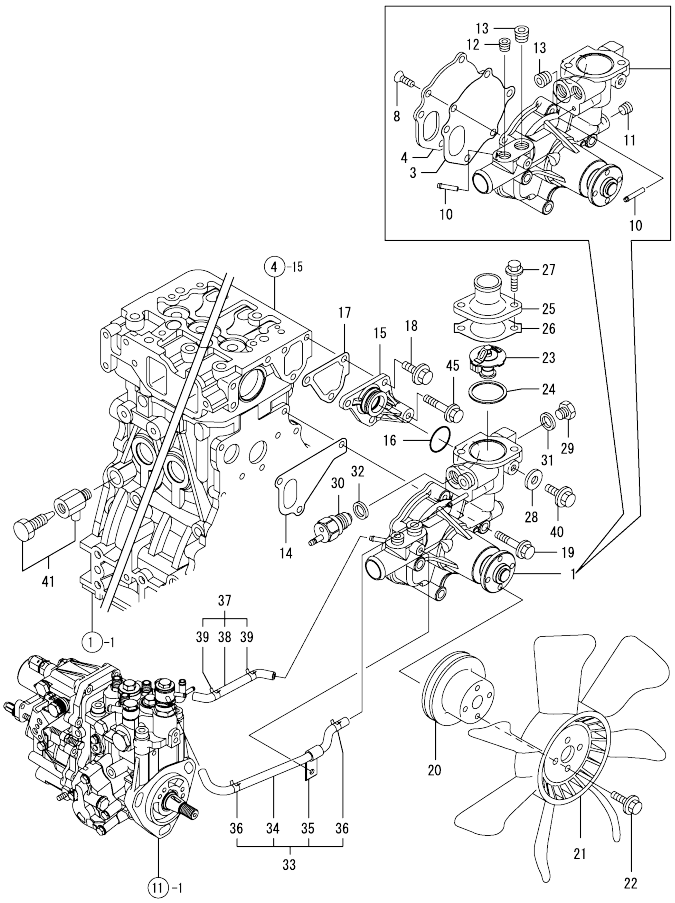

(A)=3TNV88-XAT
(B)=
(C)=
(D)=
(E)=
(F)=

No.	Lev.	Parts No.	Description	Q'ty (A)	(B)	(C)	(D)	(E)	(F)	I	R
1	1	129004-42001	PUMP ASSY, WATER	1							
3	2	129100-42051	GASKET, WATER PUMP	1							
4	2	129100-42121	PLATE	1							
8	2	121850-42410	SCREW	3							
10	2	119802-49113	JOINT, PIPE	2							
11	2	23876-010000	PLUG, R01	1							
12	2	23876-020000	PLUG, R02	1							
13	2	129916-49740	PLUG, R03	2							
14	1	129486-42021	GASKET, WATER PUMP	1							
15	1	129004-42040	JOINT	1							
16	1	129486-42140	O-RING, G30	1							
17	1	124395-49840	GASKET	1							
18	1	26106-080162	BOLT, M8X 16 PLATED	3							
19	1	26106-080602	BOLT, M8X 60 PLATED	3							
20	1	129403-42380	V-PULLEY, D=110	1							
21	1	129655-44740	FAN, COOLING D380	1							
22	1	26106-060122	BOLT, M6X 12 PLATED	4							
23	1	129155-49801	THERMOSTAT, 71	1							
24	1	129150-49811	GASKET, THERMOSTAT	1							
25	1	129350-49530	COVER, THERMOSTAT	1							
26	1	129795-49551	GASKET	1							
27	1	26106-080222	BOLT, M8X 22 PLATED	2							
28	1	23414-080000	GASKET, 8X1.0	1							
29	1	121450-42450	PLUG, M16	1							
30	1	121250-44901	SWITCH, 110	1							
31	1	124465-44950	GASKET, 16	1							
32	1	124465-44950	GASKET, 16	1							
33	1	129004-49610	PIPE ASSY, WATER	1							
34	2	129004-49711	PIPE ASSY, WATER	1							
35	2	119802-49730	RETAINER, PIPE	1							
36	2	124722-59050	CLIP, HOSE 9	2							
37	1	129004-49620	PIPE ASSY, WATER	1							
38	2	129004-49721	PIPE ASSY, WATER	1							
39	2	124722-59050	CLIP, HOSE 9	2							
40	1	26106-080122	BOLT, M8X 12 PLATED	1							
41	1	119620-49290	COCK ASSY, 1/4	1							
45	1	26106-080452	BOLT, M8X 45 PLATED	1							

N:Old ←Yes/No→ New. Q:Old ←No/Yes→ New. R:Old ←Yes/Yes→ New. S:Old ←No/No→ New. W:Add. Z:Discontinued. F:Interchangeable by set. K:Q'ty Change

Copyright (C) YANMAR CO., LTD. All RightsReserved.

Fig.11. FUEL INJECTION PUMP

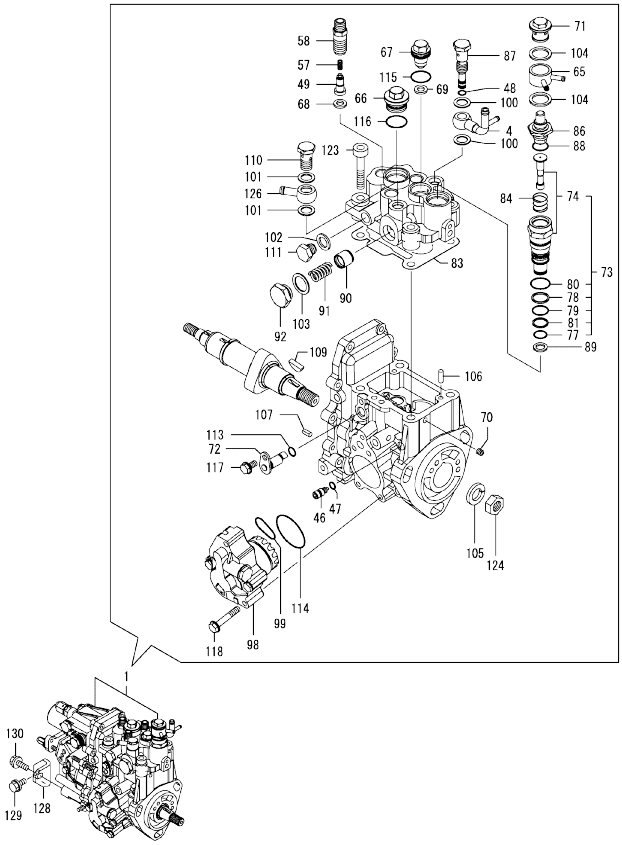

Remarks
(1) GOVERNOR ASSY(FIG.12) IS INCORPORATED IN THIS FOP.CMP (REF.NO.1).

(A)=3TNV88-XAT
(B)=
(C)=
(D)=
(E)=
(F)=

No.	Lev.	Parts No.	Description	Q'ty (A)	(B)	(C)	(D)	(E)	(F)	I	R
1	1	729267-51320	PUMP ASSY, INJECTION	1							1
4	2	158552-51670	JOINT, OVER FLOW	1							
46	2	158600-51270	STOPPER, TAPPET	1							
47	2	158563-51281	O-RING, 4D S6	1							
48	2	158563-51281	O-RING, 4D S6	1							
49	2	158560-51300	VALVE ASSY, DELIVERY	3							
57	2	158563-51330	SPRING, DELIVERY	3							
58	2	158601-51340	HOLDER, DELIVERY	3							
65	2	158553-51551	JOINT	1							
66	2	158601-51550	PLUG	1							
67	2	119802-51560	PLUG, BARREL	1							
68	2	158552-51570	GASKET	3							
69	2	158552-51570	GASKET	1							
70	2	158557-51570	PLUG	1							
71	2	158601-51570	PLUG	1							
72	2	158552-51580	LIFTER	1							
73	2	119802-51590	TIMER SET	1							
74	3	119802-51600	TIMER ASSY	1							
77	3	158553-51670	O-RING, 1011	1							
78	3	119802-51680	RING, BACK UP	1							
79	3	119802-51690	O-RING	1							
80	3	24356-010200	O-RING, 4D1020	1							
81	3	24372-000150	RING, BACK UP T2P15	1							
83	2	158552-51600	GASKET	1							
84	2	158553-51630	SPRING, TIMER	1							
86	2	158553-51640	ELEMENT	1							
87	2	158601-51650	JOINT, OVER FLOW	1							
88	2	158553-51660	O-RING, P14	1							
89	2	158553-51680	GASKET	1							
90	2	158601-51770	PISTON	1							
91	2	158552-51780	SPRING	1							
92	2	158601-51790	PLUG	1							
98	2	158552-52100	PUMP ASSY, FUEL FEED	1							
99	2	158552-52310	O-RING	1							
100	2	22190-120002	WASHER, SEAL 12	2							
101	2	22190-120002	WASHER, SEAL 12	2							
102	2	22190-120002	WASHER, SEAL 12	1							
103	2	22190-180002	WASHER, SEAL 18	1							
104	2	22190-180002	WASHER, SEAL 18	2							
105	2	22217-140000	WASHER, SPRING 14	1							
106	2	22312-050140	PIN, PARALLEL M5X14	2							
107	2	22351-050010	PIN, SPRING 5.0X10	2							
109	2	119802-51090	KEY, 4X16	1							
110	2	23857-060000	BOLT, JOINT 6	1							
111	2	23887-120002	PLUG, 12	1							
113	2	24311-000070	O-RING, 1AP7.0	1							
114	2	158552-52400	O-RING, 4E S42	1							
115	2	24356-010180	O-RING, 4D1018	1							
116	2	24356-010200	O-RING, 4D1020	1							
117	2	26106-060102	BOLT, M6X 10 PLATED	1							
118	2	158553-51770	BOLT	4							

N:Old ←Yes/No→ New. Q:Old ←No/Yes→ New. R:Old ←Yes/Yes→ New. S:Old ←No/No→ New. W:Add. Z:Discontinued. F:Interchangeable by set. K:Q'ty Change

++ CONTINUE ++

Copyright (C) YANMAR CO., LTD. All RightsReserved.

Fig.11. FUEL INJECTION PUMP

(A)=3TNV88-XAT
(B)=
(C)=
(D)=
(E)=
(F)=

No.	Lev.	Parts No.	Description	Q'ty (A)	(B)	(C)	(D)	(E)	(F)	I	R
123	2	26450-080452	BOLT, M8X 45	4							
124	2	26776-140002	NUT, LOCK M14	1							
126	2	129916-59020	JOINT, PIPE 12	1							
128	1	119802-51250	RETAINER, PUMP	1							
129	1	26106-080162	BOLT, M8X 16 PLATED	1							
130	1	26106-080202	BOLT, M8X 20 PLATED	1							

Remarks
(1) GOVERNOR ASSY(FIG.12) IS INCORPORATED IN THIS FOP.CMP (REF.NO.1).

N:Old ←Yes/No→ New. Q:Old ←No/Yes→ New. R:Old ←Yes/Yes→ New. S:Old ←No/No→ New. W:Add. Z:Discontinued. F:Interchangeable by set. K:Q'ty Change

Copyright (C) YANMAR CO., LTD. All RightsReserved.

Fig.12. GOVERNOR

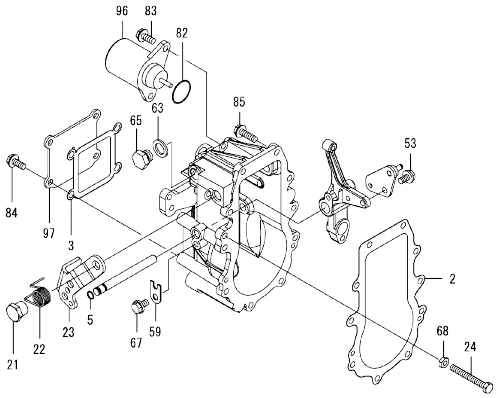

Remarks
* THIS FIGURE(GOVERNOR ASSY)IS INCORPORATED IN THE FUEL INJECTION PUMP ASSY(FIG.11).

(A)=3TNV88-XAT (D)=
(B)= (E)=
(C)= (F)=

No.	Lev.	Parts No.	Description	Q'ty (A)	(B)	(C)	(D)	(E)	(F)	I	R
2	2	158553-61050	GASKET	1							
3	2	158553-61070	GASKET	1							
5	2	129155-51280	O-RING, S6	1							
21	2	129255-61410	NUT, LOCK	1							
22	2	119807-61420	SPRING, RETURN	1							
23	2	158552-61441	LEVER, REGULATOR	1							
24	2	129155-61460	BOLT, IDLE	1							
53	2	26106-060102	BOLT, M6X 10 PLATED	1							
59	2	119660-61901	RETAINER, SHAFT	1							
63	2	22190-120000	WASHER, SEAL 12	1							
65	2	23887-120002	PLUG, 12	1							
67	2	26106-060102	BOLT, M6X 10 PLATED	1							
68	2	26756-060002	NUT, LOCK M6	1							
82	2	24341-000280	O-RING, 1AS28.0	1							
82-1	2	158552-61900	O-RING	1						N	
	(A=EXXXXX)										
83	2	26106-060142	BOLT, M6X 14 PLATED	2							
84	2	26106-060142	BOLT, M6X 14 PLATED	4							
85	2	26106-060202	BOLT, M6X 20 PLATED	10							
96	2	119233-77932	SOLENOID, STOP	1							
97	2	129642-61060	COVER, GOVERNOR CASE	1							

N:Old ◄Yes/No► New. Q:Old ◄No/Yes► New. R:Old ◄Yes/Yes► New. S:Old ◄No/No► New. W:Add. Z:Discontinued. F:Interchangeable by set. K:Q'ty Change

Copyright (C) YANMAR CO., LTD. All RightsReserved.

Fig.13. FUEL INJECTION VALVE

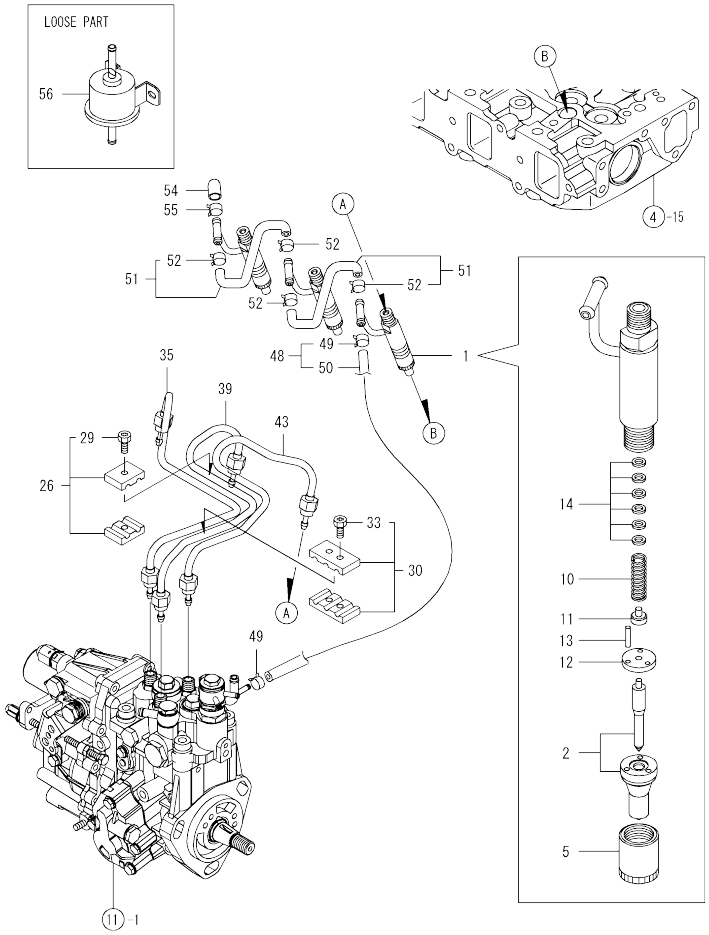

(A)=3TNV88-XAT
(B)=
(C)=
(D)=
(E)=
(F)=

No.	Lev.	Parts No.	Description	Q'ty (A)	(B)	(C)	(D)	(E)	(F)	I	R
1	1	729645-53100	VALVE ASSY,INJECTION	3							
2	2	129602-53001	VALVE ASSY,INJECTION	3							
5	2	114250-53080	NUT, NOZZLE D16.95	3							
10	2	114250-53120	SPRING, NOZZLE	3							
11	2	114250-53130	SEAT, SPRING	3							
12	2	114250-53140	PLATE	3							
13	2	114250-53210	PIN	6							
14	2	114250-53400	SHIM SET	3							
26	1	119305-59120	RETAINER, PIPE	1							
29	2	129150-59131	BOLT, M4X14	1							
30	1	129150-59120	RETAINER, PIPE	1							
33	2	129150-59131	BOLT, M4X14	2							
35	1	129004-59810	PIPE ASSY, INJECTION	1							
39	1	129004-59820	PIPE ASSY, INJECTION	1							
43	1	129004-59830	PIPE ASSY, INJECTION	1							
48	1	119802-59550	PIPE ASSY, RETURN	1							
49	2	124722-59050	CLIP, HOSE 9	2							
50	2	119802-59560	PIPE, FUEL RETURN	1							
51	1	129486-59551	PIPE ASSY, RETURN	2							
52	2	124722-59050	CLIP, HOSE 9	4							
54	1	119593-59580	CAP	1							
55	1	124060-77680	CLIP, HOSE 10	1							
56	1	119225-52102	PUMP ASSY, FUEL FEED	1							

N:Old ←Yes/No→ New. Q:Old ←No/Yes→ New. R:Old ←Yes/Yes→ New. S:Old ←No/No→ New. W:Add. Z:Discontinued. F:Interchangeable by set. K:Q'ty Change

Copyright (C) YANMAR CO., LTD. All RightsReserved.

Fig.14. STARTING MOTOR

(A)=3TNV88-XAT
(B)=
(C)=
(D)=
(E)=
(F)=

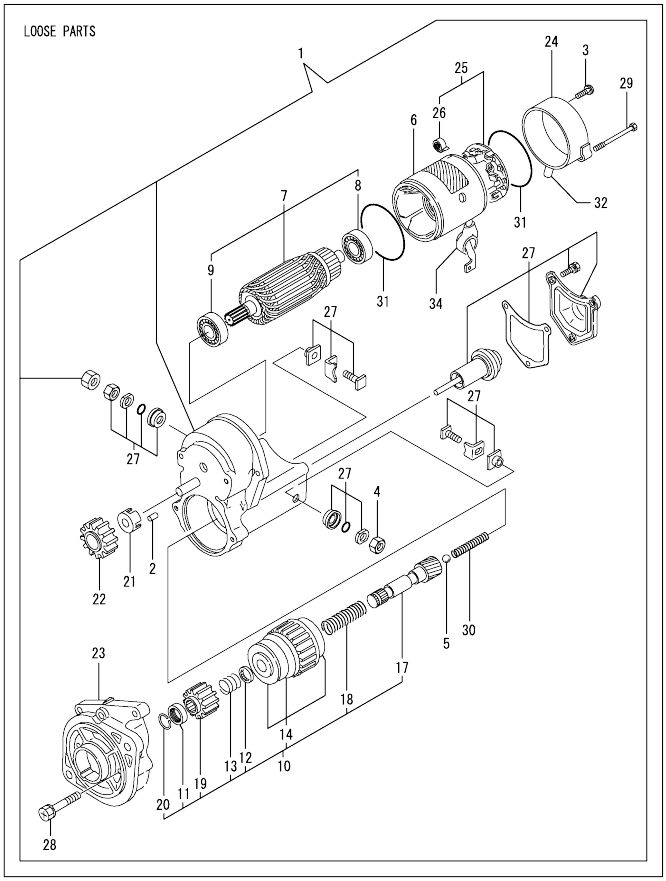

No.	Lev.	Parts No.	Description	Q'ty (A)	(B)	(C)	(D)	(E)	(F)	I	R
1	1	129129-77010	STARTER ASSY	1							
2	2	X0283060061	ROLLER	5							
3	2	129129-77460	SCREW	2							
4	2	X9490561370	NUT	1							
5	2	X9491200240	BALL	1							
6	2	129129-77210	YOKE ASSY	1							
7	2	129129-77220	ARMATURE ASSY	1							
8	3	129129-77230	BEARING	1							
9	3	129129-77240	BEARING	1							
10	2	129129-77250	STARTER	1							
11	3	X0280210230	NUT	1							
12	3	X0283270140	RETAINER	1							
13	3	X9491703371	SPRING, COIL	1							
14	3	129129-77390	CLUTCH ASSY, STARTER	1							
17	3	129129-77400	SHAFT	1							
18	3	129129-77410	SPRING, COIL	1							
19	3	129129-77420	PINION	1							
20	3	129129-77430	RING	1							
21	2	129129-77260	RETAINER	1							
22	2	129129-77270	PINION	1							
23	2	129129-77280	HOUSING	1							
24	2	129129-77290	FRAME	1							
25	2	129129-77300	HOLDER ASSY	1							
26	3	X9491730461	SPRING	4							
27	2	129129-77310	SWITCH ASSY	1							
28	2	129129-77320	BOLT	2							
29	2	129129-77330	BOLT	2							
30	2	129129-77340	SPRING	1							
31	2	129129-77350	O-RING	2							
32	2	129129-77362	COVER	1							
34	2	129129-77380	CAP	1							

N:Old ←Yes/No→ New. Q:Old ←No/Yes→ New. R:Old ←Yes/Yes→ New. S:Old ←No/No→ New. W:Add. Z:Discontinued. F:Interchangeable by set. K:Q'ty Change

Copyright (C) YANMAR CO., LTD. All RightsReserved.

Fig.15. GASKET SET

(A)=3TNV88-XAT
(B)=
(C)=
(D)=
(E)=
(F)=

No.	Lev.	Parts No.	Description	Q'ty (A)	(B)	(C)	(D)	(E)	(F)	I	R
1	1	729001-92940	GASKET SET	1							1
2	2	129001-01340	GASKET, HEAD	1							
3	2	121850-51960	O-RING	1							
4	2	124460-11340	SEAL, VALVE STEM	3							
5	2	119802-11870	PROTECTOR, NOZZLE	3							
6	2	119625-11880	SEAT, NOZZLE	3							
7	2	129004-11310	GASKET, BONNET	1							
8	2	129150-77511	GASKET	1							
9	2	129150-13110	GASKET	1							
10	2	129004-13200	GASKET, SILENCER	1							
11	2	121400-11340	SEAL, VALVE STEM	3							
12	2	129150-35042	GASKET	1							
13	2	129486-42140	O-RING, G30	1							
14	2	129795-49551	GASKET	1							
15	2	129150-49811	GASKET, THERMOSTAT	1							
16	2	124395-49840	GASKET	1							
17	2	22190-080002	WASHER, SEAL 6	2							
18	2	124465-44950	GASKET, 16	2							
19	2	24311-000120	O-RING, 1AP12.0	3							
20	2	24311-000320	O-RING, 1AP32.0	2							
21	2	24341-000240	O-RING, 1AS24.0	1							
22	2	124240-01883	GASKET	2							
23	2	129001-12110	GASKET, MANIFOLD	1							
24	2	129150-35111	GASKET	1							
25	2	22190-160002	WASHER, SEAL 16	1							
26	2	119609-32040	O-RING, P16	4							
27	2	22190-100002	WASHER, SEAL 10	2							
28	2	23414-080000	GASKET, 8X1.0	1							
29	1	129400-92430	HONE	1							1
30	1	977770-1207F	GASKET.LIQUID	1							1

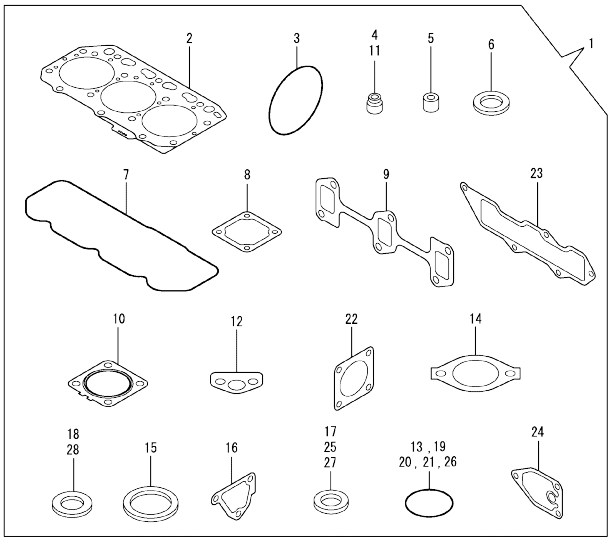

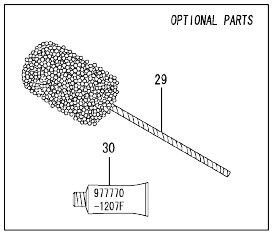

Remarks
(1) OPTIONAL PART.

N:Old $\frac{\text{Yes}}{\text{No}}$ New. Q:Old $\frac{\text{No}}{\text{Yes}}$ New. R:Old $\frac{\text{Yes}}{\text{Yes}}$ New. S:Old $\frac{\text{No}}{\text{No}}$ New. W:Add. Z:Discontinued. F:Interchangeable by set. K:Q'ty Change

Copyright (C) YANMAR CO., LTD. All RightsReserved.

Parts No. Index

Parts No.	Fig. No.	Ref. No.
105425-01690	3	3
114250-39450	9	15
114250-53080	13	5
114250-53120	13	10
114250-53130	13	11
114250-53140	13	12
114250-53210	13	13
114250-53400	13	14
119131-18320	6	4
119225-52102	13	56
119233-77932	12	96
119305-59120	13	26
119593-59580	13	54
119609-32040	2	17
	15	26
119620-49290	10	41
119625-11880	4	32
	15	6
119660-61901	12	59
119802-01560	2	13
119802-03110	4	43
119802-03121	4	44
119802-03130	4	45
119802-03141	4	46
119802-11260	4	6
119802-11270	4	7
119802-11280	4	8
119802-11870	4	55
	15	5
119802-21202	8	5
119802-25051	7	10
119802-25070	7	14
119802-25100	7	11
119802-25901	7	17
119802-32070	2	8
119802-32100	2	7
119802-32111	2	18
119802-32120	2	19
119802-32130	2	20
119802-35100	9	8
119802-35110	9	9
119802-39450	9	17
119802-49113	10	10
119802-49730	10	35
119802-51090	11	109
119802-51250	11	128
119802-51560	11	67
119802-51590	11	73
119802-51600	11	74
119802-51680	11	78

Parts No.	Fig. No.	Ref. No.
119802-51690	11	79
119802-59550	13	48
119802-59560	13	50
119807-61420	12	22
120130-11860	4	19
120270-54410	4	34
121023-01550	2	28
121111-21501	8	12
		37
121250-44901	10	30
121400-11340	4	28
	15	11
121450-42450	10	29
121520-34810	9	2
121550-23200	8	26
121850-21680	8	11
121850-42410	10	8
121850-51960	2	21
	15	3
123900-13610	6	5
123900-13630	6	3
124060-01050	1	5
124060-77680	13	55
124160-01751	2	14
	4	39
124160-01910	1	7
		8
124160-11360	4	52
124160-39140	9	16
124240-01871	2	15
		33
	7	21
124240-01883	2	34
	7	22
	15	22
124395-49840	10	17
	15	16
124460-11340	4	29
	15	4
124465-44950	10	31
		32
	15	18
124550-21600	8	38
124722-59050	10	36
		39
	13	49
		52
129001-01250	1	6
129001-01340	1	33
	15	2

Parts No.	Fig. No.	Ref. No.
129001-02930	1	25
129001-12110	5	5
	15	23
129001-32330	2	11
129001-91841	2	22
	3	9
129001-91910	3	10
129004-01190	1	31
129004-01520	2	12
129004-03010	4	41
129004-03080	5	1
129004-11101	4	24
129004-11241	4	3
129004-11251	4	4
129004-11310	4	49
	15	7
129004-11350	4	40
129004-11650	4	10
129004-11700	4	15
129004-11900	4	33
129004-12100	5	3
129004-13200	6	7
	15	10
129004-21002	8	1
129004-42001	10	1
129004-42040	10	15
129004-49610	10	33
129004-49620	10	37
129004-49711	10	34
129004-49721	10	38
129004-59810	13	35
129004-59820	13	39
129004-59830	13	43
129005-22080	8	13
129005-22500	8	15
129005-22900	8	31
129005-22950	8	33
129005-59830	9	18
129051-34820	9	1
129055-21650	8	9
129100-01580	3	12
	8	2
129100-01640	3	13
129100-11111	4	25
129100-23910	8	25
129100-35140	9	10
129100-42051	10	3
129100-42121	10	4
129126-01550	3	1
129126-01700	3	6

Parts No.	Fig. No.	Ref. No.
129129-01540	3	2
129129-14580	7	3
129129-35010	9	5
129129-35080	9	6
129129-35090	9	4
129129-77010	14	1
129129-77210	14	6
129129-77220	14	7
129129-77230	14	8
129129-77240	14	9
129129-77250	14	10
129129-77260	14	21
129129-77270	14	22
129129-77280	14	23
129129-77290	14	24
129129-77300	14	25
129129-77310	14	27
129129-77320	14	28
129129-77330	14	29
129129-77340	14	30
129129-77350	14	31
129129-77362	14	32
129129-77380	14	34
129129-77390	14	14
129129-77400	14	17
129129-77410	14	18
129129-77420	14	19
129129-77430	14	20
129129-77460	14	3
129150-01200	1	32
129150-01580	2	32
129150-02020	1	10
129150-02450	7	4
129150-02870	1	34
129150-02930	1	28
129150-02940	1	37
129150-03070	4	42
129150-11230	4	11
129150-11280	4	9
129150-11370	4	14
129150-11750	4	13
129150-11810	4	21
129150-13110	6	2
	15	9
129150-14101	7	7
129150-14200	7	1
129150-14400	7	2
129150-23600	8	27
129150-23610	8	29
129150-25301	7	16

Parts No. Index

Parts No.	Fig. No.	Ref. No.
129150-26050	7	24
129150-35042	9	3
	15	12
129150-35111	9	12
	15	24
129150-35153	9	13
129150-49811	10	24
	15	15
129150-59120	13	30
129150-59131	13	29
		33
129150-77511	5	8
	15	8
129155-49801	10	23
129155-51280	12	5
129155-61460	12	24
129202-22300	8	19
129236-03120	4	44 -1
129236-11350	4	40 -1
129255-61410	12	21
129350-49530	10	25
129400-92430	15	29
129403-42380	10	20
129410-03990	5	2
129418-32320	2	10
129486-01670	3	16
129486-42021	10	14
129486-42140	10	16
	15	13
129486-59551	13	51
129555-26000	7	23
129602-53001	13	2
129642-61060	12	97
129655-44740	10	21
129795-01780	3	15
129795-01800	2	6
129795-01950	2	16
129795-02411	1	13
129795-11120	4	26
129795-11180	4	27
129795-21661	8	10
129795-49551	10	26
	15	14
129900-07900	4	1
129900-32130	2	9
129916-49740	10	13
129916-59020	11	126
158552-51151	7	18
158552-51570	11	68
		69

Parts No.	Fig. No.	Ref. No.
158552-51580	11	72
158552-51600	11	83
158552-51670	11	4
158552-51780	11	91
158552-52100	11	98
158552-52310	11	99
158552-52400	11	114
158552-61441	12	23
158552-61900	12	82 -1
158553-51551	11	65
158553-51630	11	84
158553-51640	11	86
158553-51660	11	88
158553-51670	11	77
158553-51680	11	89
158553-51770	11	118
158553-61050	12	2
158553-61070	12	3
158557-51570	11	70
158560-51300	11	49
158563-51281	11	47
		48
158563-51330	11	57
158600-51270	11	46
158601-51340	11	58
158601-51550	11	66
158601-51570	11	71
158601-51650	11	87
158601-51770	11	90
158601-51790	11	92
171051-01921	1	9
171340-77520	5	9
171350-13100	6	1
22190-080002	9	20
		21
	15	17
22190-100002	9	22
	15	27
22190-120000	12	63
22190-120002	11	100
		101
		102
22190-160002	3	5
	15	25
22190-180002	11	103
		104
22217-140000	7	19
	11	105
22252-000260	8	20
22312-050140	11	106

Parts No.	Fig. No.	Ref. No.
22351-050010	11	107
22351-060012	4	35
22512-070140	7	8
	8	6
		8
22857-500100	4	50
		51
23414-080000	10	28
	15	28
23857-030000	9	19
23857-060000	11	110
23876-010000	10	11
23876-020000	10	12
23876-030000	2	4
23876-040000	2	5
23887-120002	11	111
	12	65
24105-060064	7	28
24311-000070	11	113
24311-000120	4	53
	15	19
24311-000320	2	23
	4	54
	15	20
24341-000240	2	29
	15	21
24341-000280	12	82
24356-010180	11	115
24356-010200	11	80
		116
24372-000150	11	81
26106-060102	11	117
	12	53
		67
26106-060122	10	22
26106-060142	12	83
		84
26106-060162	2	30
26106-060202	12	85
26106-080122	2	35
	3	8
	9	7
	10	40
26106-080142	7	9
26106-080162	2	24
		25
	4	2
	10	18
	11	129
26106-080202	5	6

Parts No.	Fig. No.	Ref. No.
26106-080202	9	11
	11	130
26106-080222	10	27
26106-080252	3	11
	4	36
	5	10
	7	29
26106-080352	4	37
	9	14
26106-080402	7	15
26106-080452	10	45
26106-080502	4	38
26106-080552	2	26
26106-080602	10	19
26106-080652	5	11
26106-080802	5	7
26306-080002	2	27
	6	6
	7	30
26366-060002	9	23
26450-080452	11	123
26756-060002	12	68
26776-140002	7	20
	11	124
27241-120000	1	14
27241-300000	1	15
27241-400000	4	23
27310-080001	4	30
729001-92940	15	1
729004-01500	2	1
729005-01560	1	1
729267-51320	11	1
729402-23100	8	21
729645-53100	13	1
977770-1207F	2	31
	3	17
	4	56
	15	30
X0280210230	14	11
X0283060061	14	2
X0283270140	14	12
X9490561370	14	4
X9491200240	14	5
X9491703371	14	13
X9491730461	14	26