YANMAR

PARTS CATALOG

0CV10-M98900EN

Last update Sep., 2014

PREFACE

1.This Parts Catalog carries all parts incorporated in YANMAR Model 3TNV88-XMS engine manufactured since June, 2004.

2.Each illustration corresponds to the parts list on the following page.

3.When ordering parts,clearly write down the engine model and serial number,as well as the name and number of each part in your order sheet. This will help insure reliable delivery of the parts you have ordered.

Directions for the Parts Catalog.

1.The parts stipulated in this Parts Catalog are not necessarily standard equipped parts.
2.Parts may change without prior notice.
3.The following is an example of the Parts Catalog format.

0CF10-G21601 29. FUEL INJECTION PUMP(W/BOOST)

(A)=4JH-DT
(B)=4JH-DTZ
(C)=4JH-DTZP
(D)=4JH-DTZA
(E)=4JH-DTZY
(F)=

① REF.	② LEV.	PARTS NO.	DESCRIPTION	Q'TY (A)	(B)	(C)	(D)	(E)	(F)	③ I	⑤ R
1	1	729595-51390	FUEL INJECTION PUMP	1	1	1	1	1			1
1-1	1	729595-51391	FUEL INJECTION PUMP	1	1	1	1	1		N	1
	(A=E00185)	(B=E00200)									
3	2	26022-060162	SCREW M 6X 16	9	9	9	9	9			
3-1 ④	2	26022-060162	SCREW M 6X 16	4	4	4	4	4		K	
	(A=E00156)	(B=E00156)	(C=E00156) (D=E00156)	(E=E00156)							
4	2	129470-51040	CAMSHAFT	1	1	1	1	1			
5	2	122710-51050	BEARING, ROLLER	2	2	2	2	2			
6	2	129470-51060	RETAINER	1	1	1	1	1			

Remarks
(1) BOOST COMPEMSATOR TYPE. OPTIONAL
PART, TO E00155,(4JH-DT, 4JH-DTZ

① Ref. No.

The Ref. No. listed may not be in accordance with the illustration Ref. No.

(Ex.) Illustration No. 1 List Ref No. 1 (Before change) → 1- 1 (After change)

For interchangeable symbols N, R and K, illustrations for new parts may be abbreviated.

② Lev. (Level)

Level indication
The numbers below indicate the level of relativity towards the main part.
1 ----- Main parts (Assembly parts)
2 ----- Sub component included in " 1 ".
3 ----- Sub component included in " 2 ".
Note) Parts that are not for sale are partially illustrated but not listed.

③ Interchangeability Mark

When a part change takes place, one of the following interchangeability symbols is indicated beside the part.

Symbol	Interchangeability	Contents note
N	Old ← Yes / No → New	New Part is interchangeable for Old Part but Old Part is not interchangeable for New Part.
Q	Old ← No / Yes → New	New Part is not interchangeable for Old Part but Old Part is interchangeable for New Part.
R	Old ← Yes / Yes → New	New/ Old Parts are both interchangeable.
S	Old ← No / No → New	New/ Old Parts are both not interchangeable.
W		Part newly added.
Z		Part discontinued.
F		Not interchangeable by a single part but interchangeable together with related parts.
K		Changes only for used parts quantities.

④ Effective Machine No.

When a part changes, the effective Machine No. will be indicated in the (A)-(F) column.

Product Symbol	Product No.	Product Symbol	Product No.
C	Clutch No. Compressor No.	F	Machine No. (Agricultural Equip.)
D	Drive No.	M	Machine No.
E	Engine No.		

Note 1) A date may follow the symbol. (Ex.) 1996.01
Note 2) " XXXXX " and " ZZZZZ " are for parts that could not be predicted or for engine models that could not be identified.
Note 3) (A=E00185) is the E (Engine Serial Number) for the column (A) model (in this case 4JH-DT) after the parts design change.

⑤ Remarks Mark

Figures or alphabets (symbols) are entered in the remarks column.
The comments (remarks) on parts that are indicated at the bottom of the illustration are the same symbols as those stated above.

Contents

Fig. No.	Fig. Name
ENGINE SECTION (3TNV88-XMS)	
1.	CYLINDER BLOCK
2.	GEAR HOUSING
3.	FLYWHEEL HOUSING & OIL SUMP
4.	CYLINDER HEAD & BONNET
5.	SUCTION MANIFOLD
6.	EXHAUST MANIFOLD
7.	CAMSHAFT & DRIVING GEAR
8.	CRANKSHAFT & PISTON
9.	LUB.OIL SYSTEM
10.	COOLING WATER SYSTEM
11.	FUEL INJECTION PUMP
12.	FUEL INJECTION VALVE
13.	FUEL LINE
14.	STARTING MOTOR
15.	GENERATOR
16.	GASKET SET

Fig. No.	Fig. Name

0CV10-M98900

Fig.1. CYLINDER BLOCK

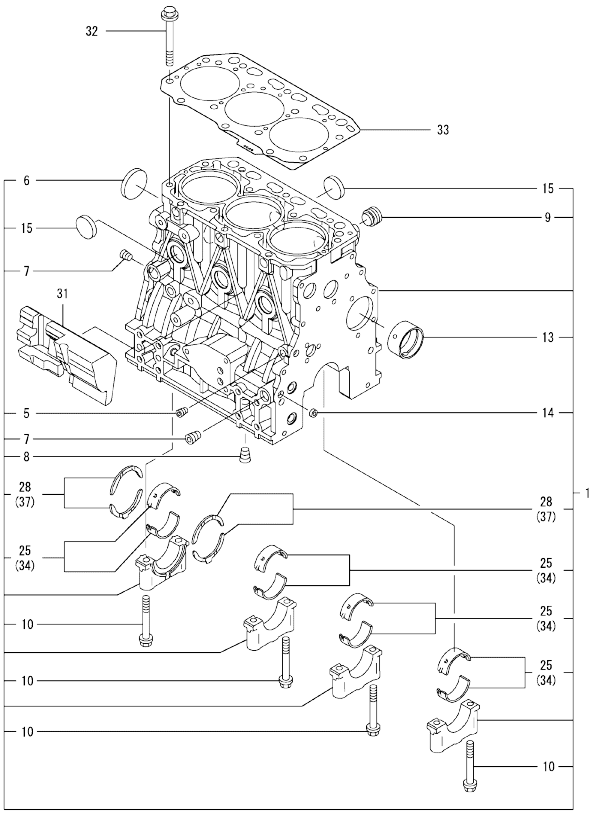

(A)=3TNV88-XMS (D)=
(B)= (E)=
(C)= (F)=

No.	Lev.	Parts No.	Description	Q'ty (A)	(B)	(C)	(D)	(E)	(F)	I	R
1	1	729005-01560	BLOCK ASSY, CYLINDER	1							
5	2	124060-01050	PLUG, PT1/8	1							
6	2	129001-01250	PLUG, 50	1							
7	2	124160-01910	PLUG, PT1/4	2							
8	2	124160-01910	PLUG, PT1/4	1							
9	2	171051-01921	PLUG, NPTF1	1							
10	2	129150-02020	BOLT, METAL CAP	8							
13	2	129795-02411	BUSH, CAMSHAFT	1							
14	2	27241-120000	PLUG, 12	2							
15	2	27241-300000	PLUG 30	6							
25	2	129001-02930	BEARING, MAIN	4							3
28	2	129150-02930	BEARING, THRUST	2							
31	1	129004-01190	SPACER	1							
32	1	129150-01200	BOLT, HEAD	14							
33	1	129001-01340	GASKET, HEAD	1							
34	1	129150-02870	BEARING, 0.25 US	4							1
37	1	129150-02940	BEARING, THRUST 0.25	1							2

Remarks
(1) UNDER-SIZE(U.S=0.25)PART.
(2) OVER-SIZE(O.S=0.25)PART.
(3) REPAIR PART.

N:Old ←Yes/No→ New. Q:Old ←No/Yes→ New. R:Old ←Yes/Yes→ New. S:Old ←No/No→ New. W:Add. Z:Discontinued. F:Interchangeable by set. K:Q'ty Change

Copyright (C) YANMAR CO., LTD. All RightsReserved.

0CV10-M98900

Fig.2. GEAR HOUSING

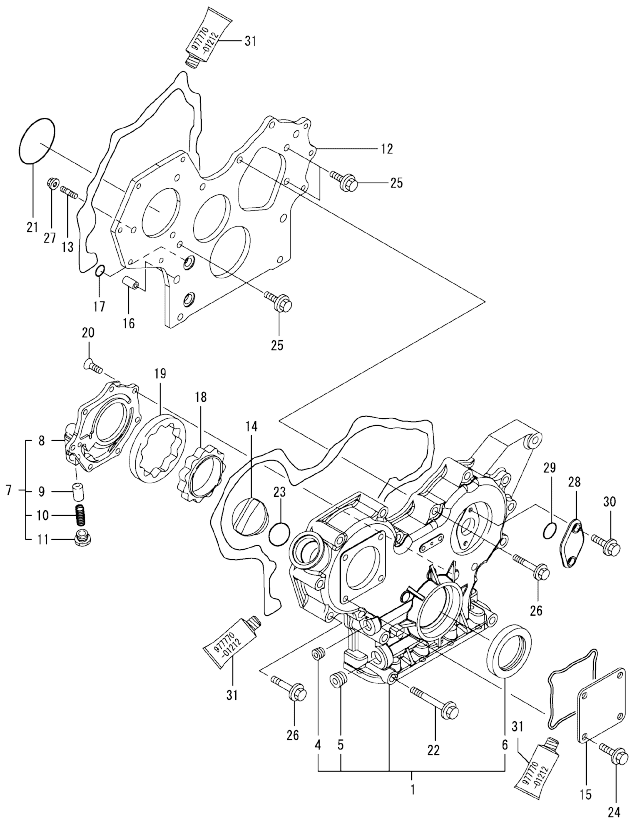

(A)=3TNV88-XMS (D)=
(B)= (E)=
(C)= (F)=

No.	Lev.	Parts No.	Description	Q'ty (A)	(B)	(C)	(D)	(E)	(F)	I	R
1	1	719802-01500	CASE ASSY, GEAR	1							
4	2	23876-030000	PLUG, R03	1							
5	2	23876-040000	PLUG, R04	1							
6	2	129795-01800	SEAL, OIL	1							
7	1	119802-32100	COVER ASSY	1							
8	2	119802-32070	COVER	1							
9	2	129900-32130	VALVE, RELIEF	1							
10	2	129418-32320	SPRING	1							
11	2	129001-32330	PLUG	1							
12	1	119802-01520	FLANGE, GEAR CASE	1							
13	1	119802-01560	STUD, M8X25	3							
14	1	124160-01751	COVER, FILLER	1							
15	1	124240-01871	COVER	1							
16	1	129795-01950	PIPE, KNOCK L=18	2							
17	1	119609-32040	O-RING, P16	4							
18	1	119802-32111	ROTOR, INNER	1							
19	1	119802-32120	ROTOR, OUTER	1							
20	1	119802-32130	SCREW, M6X16	7							
21	1	121850-51960	O-RING	1							
22	1	129001-91841	BOLT, M8X85	3							
23	1	24311-000320	O-RING, 1AP32.0	1							
24	1	26106-080162	BOLT, M8X 16 PLATED	4							
25	1	26106-080162	BOLT, M8X 16 PLATED	3							
26	1	26106-080552	BOLT, M8X 55 PLATED	12							
27	1	26306-080002	NUT, M8	3							
28	1	121023-01550	COVER	1							
29	1	24341-000240	O-RING, 1AS24.0	1							
30	1	26106-060162	BOLT, M6X 16 PLATED	2							
31	1	977770-01212	GASKET, LIQUID	1							1

Remarks
(1) OPTIONAL PART.

N:Old $\frac{\text{Yes}}{\text{No}}$ New. Q:Old $\frac{\text{No}}{\text{Yes}}$ New. R:Old $\frac{\text{Yes}}{\text{Yes}}$ New. S:Old $\frac{\text{No}}{\text{No}}$ New. W:Add. Z:Discontinued. F:Interchangeable by set. K:Q'ty Change

Copyright (C) YANMAR CO., LTD. All RightsReserved.

0CV10-M98900

Fig.3. FLYWHEEL HOUSING & OIL SUMP

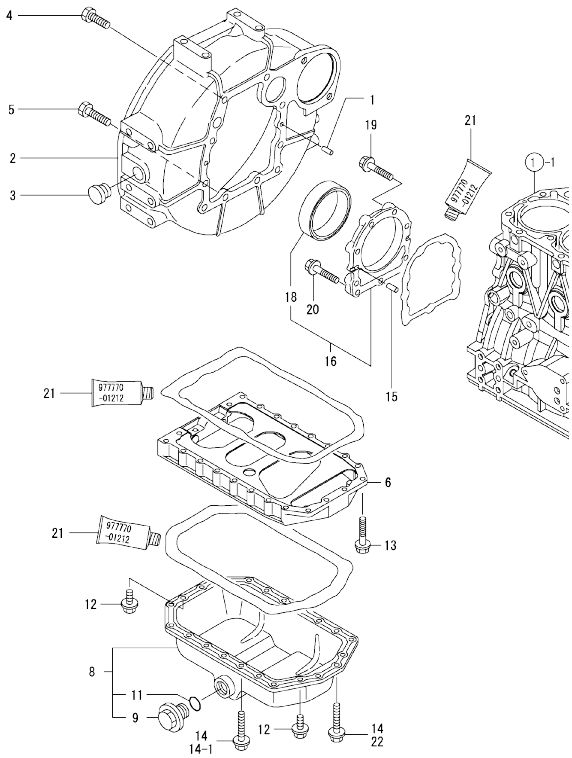

(A)=3TNV88-XMS (D)=
(B)= (E)=
(C)= (F)=

No.	Lev.	Parts No.	Description	Q'ty (A)	(B)	(C)	(D)	(E)	(F)	I	R
1	1	129100-01580	PIN, M8X16	2							
2	1	129612-01600	HOUSING, FLYWHEEL	1							
3	1	119620-01750	CAP	1							
4	1	26206-100252	BOLT, M10X 25 PLATED	6							
5	1	26206-100302	BOLT, M10X 30 PLATED	4							
6	1	129100-01730	SPACER, OIL SUMP	1							
8	1	129175-01770	SUMP ASSY, OIL	1							
9	2	119640-01640	PLUG, DRAIN M22	1							
11	2	22190-220002	WASHER, SEAL 22	1							
12	1	26106-080162	BOLT, M8X 16 PLATED	4							
13	1	26106-080252	BOLT, M8X 25 PLATED	2							
14	1	26106-080452	BOLT, M8X 45 PLATED	20							
14-1	1	26106-080452	BOLT, M8X 45 PLATED	16						K	
	(A=FROM 1ST)										
15	1	129100-01580	PIN, M8X16	2							
16	1	129100-01640	CASE ASSY, OIL SEAL	1							
18	2	129795-01780	SEAL, OIL	1							
19	1	129486-01670	BOLT, M8X30	6							
20	1	26106-080352	BOLT, M8X 35 PLATED	3							
21	1	977770-01212	GASKET, LIQUID	1							1
22	1	26106-080502	BOLT, M8X 50 PLATED	4						W	
	(A=FROM 1ST)										

Remarks
(1) OPTIONAL PART.

N:Old ←Yes/No→ New. Q:Old ←No/Yes→ New. R:Old ←Yes/Yes→ New. S:Old ←No/No→ New. W:Add. Z:Discontinued. F:Interchangeable by set. K:Q'ty Change

Copyright (C) YANMAR CO., LTD. All RightsReserved.

0CV10-M98900

Fig.4. CYLINDER HEAD & BONNET

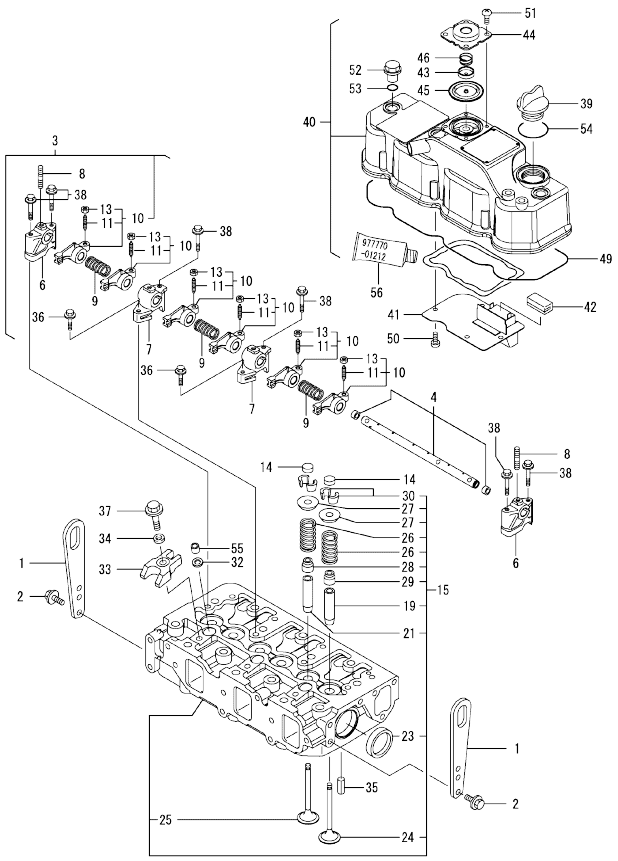

(A)=3TNV88-XMS (D)=
(B)= (E)=
(C)= (F)=

No.	Lev.	Parts No.	Description	Q'ty (A)	(B)	(C)	(D)	(E)	(F)	I	R
1	1	129900-07900	LIFTER	2							
2	1	26106-080142	BOLT, M8X 14 PLATED	4							
3	1	129004-11241	SHAFT ASSY, ROCKER	1							
4	2	129004-11251	SHAFT, ROCKER ARM	1							
6	2	119802-11260	SUPPORT, ROCKER ARM	2							
7	2	119802-11270	SUPPORT, ROCKER ARM	2							
8	2	119802-11280	STUD	3							
9	2	129150-11280	SPRING	3							
10	2	129004-11650	ARM, ROCKER	6							
11	3	129150-11230	SCREW, VALVE ADJUST	6							
13	3	129150-11750	NUT, M8	6							
14	1	129150-11370	CAP, VALVE	6							
15	1	129005-11700	HEAD ASSY, CYLINDER	1							
19	2	120130-11860	GUIDE, VALVE	3							1
21	2	129150-11810	GUIDE, VALVE	3							1
23	2	27241-400000	PLUG, 40	2							
24	2	129005-11100	VALVE, INTAKE	3							
25	2	129100-11110	VALVE, EXHAUST	3							
26	2	129795-11120	SPRING, VALVE	6							
27	2	129795-11180	RETAINER, SPRING	6							
28	2	121400-11340	SEAL, VALVE STEM	3							
29	2	124460-11340	SEAL, VALVE STEM	3							
30	2	27310-080001	COTTER, 8	6							
32	1	119625-11880	SEAT, NOZZLE	3							
33	1	129004-11900	RETAINER, NOZZLE	3							
34	1	120270-54410	WASHER, INJECTOR	3							
35	1	22351-060012	PIN, SPRING 6.0X12	2							
36	1	26106-080252	BOLT, M8X 25 PLATED	2							
37	1	26106-080352	BOLT, M8X 35 PLATED	3							
38	1	26106-080502	BOLT, M8X 50 PLATED	6							
39	1	124160-01751	COVER, FILLER	1							
40	1	129004-11350	BONNET ASSY, HEAD	1							
41	2	129004-03010	PLATE	1							
42	2	129150-03070	BAFFLE, BREATHER	1							
43	2	119802-03110	PLATE	1							
44	2	119802-03121	COVER, DIAPHRAGM	1							
45	2	119802-03130	DIAPHRAGM	1							
46	2	119802-03141	SPRING, DIAPHRAGM	1							
49	2	129004-11310	GASKET, BONNET	1							
50	2	22857-500100	SCREW, 5X10	4							
51	2	22857-500100	SCREW, 5X10	4							
52	1	124160-11360	KNOB	3							
53	1	24311-000120	O-RING, 1AP12.0	3							
54	1	24311-000320	O-RING, 1AP32.0	1							
55	1	119802-11870	PROTECTOR, NOZZLE	3							
56	1	977770-01212	GASKET, LIQUID	1							2

Remarks
(1) REPAIR PART.
(2) OPTIONAL PART.

N:Old ←Yes/No→ New. Q:Old ←No/Yes→ New. R:Old ←Yes/Yes→ New. S:Old ←No/No→ New. W:Add. Z:Discontinued. F:Interchangeable by set. K:Q'ty Change

Copyright (C) YANMAR CO., LTD. All RightsReserved.

0CV10-M98900

Fig.5. SUCTION MANIFOLD

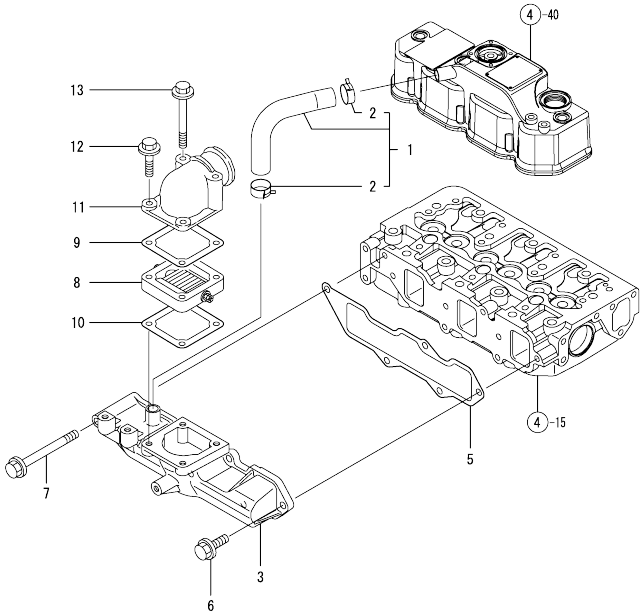

(A)=3TNV88-XMS (D)=
(B)= (E)=
(C)= (F)=

No.	Lev.	Parts No.	Description	Q'ty (A)	(B)	(C)	(D)	(E)	(F)	I	R
1	1	129005-03080	PIPE , BREATHER	1							
2	2	129410-03990	CLAMP 22	2							
3	1	129005-12100	MANIFOLD, AIR INTAKE	1							
5	1	129001-12110	GASKET, MANIFOLD	1							
6	1	26106-080202	BOLT, M8X 20 PLATED	4							
7	1	26106-080802	BOLT, M8X 80 PLATED	1							
8	1	129100-77500	HEATER, AIR 12V	1							
9	1	129100-77510	GASKET, AIR HEATER	1							
10	1	129150-77511	GASKET	1							
11	1	171340-77520	BEND	1							
12	1	26106-080402	BOLT, M8X 40 PLATED	2							
13	1	26106-080802	BOLT, M8X 80 PLATED	2							

N:Old ←Yes/No→ New. Q:Old ←No/Yes→ New. R:Old ←Yes/Yes→ New. S:Old ←No/No→ New. W:Add. Z:Discontinued. F:Interchangeable by set. K:Q'ty Change

Copyright (C) YANMAR CO., LTD. All RightsReserved.

0CV10-M98900

Fig.6. EXHAUST MANIFOLD

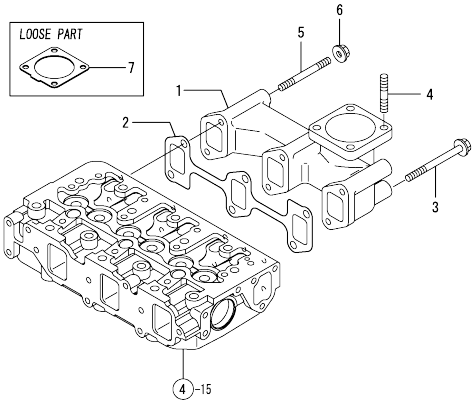

(A)=3TNV88-XMS (D)=
(B)= (E)=
(C)= (F)=

No.	Lev.	Parts No.	Description	Q'ty (A)	(B)	(C)	(D)	(E)	(F)	I	R
1	1	171350-13100	MANIFOLD, EXHAUST	1							
2	1	129150-13110	GASKET	1							
3	1	123900-13630	BOLT, M8X80	4							
4	1	119131-18320	STUD, M8X22	4							
5	1	123900-13610	STUD, M8X80	2							
6	1	26306-080002	NUT, M8	2							
7	1	129004-13200	GASKET, SILENCER	1							

N:Old ◄Yes/No► New. Q:Old ◄No/Yes► New. R:Old ◄Yes/Yes► New. S:Old ◄No/No► New. W:Add. Z:Discontinued. F:Interchangeable by set. K:Q'ty Change

Copyright (C) YANMAR CO., LTD. All RightsReserved.

0CV10-M98900

Fig.7. CAMSHAFT & DRIVING GEAR

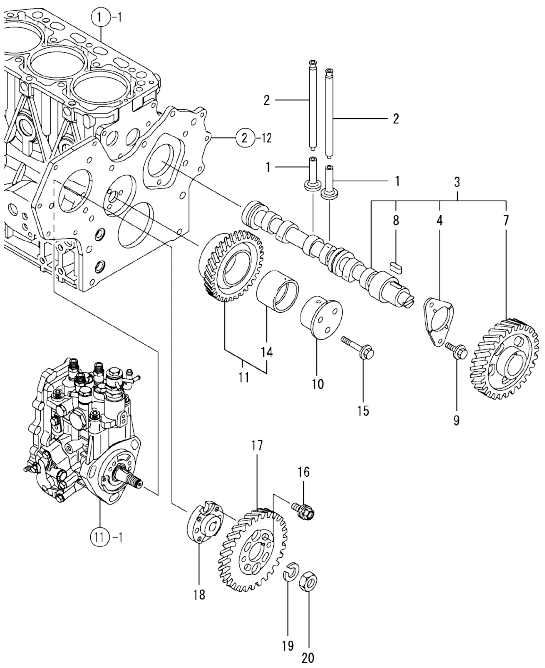

(A)=3TNV88-XMS (D)=
(B)= (E)=
(C)= (F)=

No.	Lev.	Parts No.	Description	Q'ty (A)	(B)	(C)	(D)	(E)	(F)	I	R
1	1	129150-14200	TAPPET	6							
2	1	129150-14400	ROD, PUSH L=178	6							
3	1	129129-14580	CAMSHAFT ASSY	1							
4	2	129150-02450	BEARING, THRUST	1							
7	2	129150-14101	GEAR, CAMSHAFT	1							
8	2	22512-070140	KEY, 7X 14	1							
9	1	26106-080142	BOLT, M8X 14 PLATED	2							
10	1	119802-25051	SHAFT, IDLE	1							
11	1	119802-25100	GEAR ASSY, IDLE	1							
14	2	119802-25070	BUSH, IDLE GEAR	1							1
15	1	26106-080402	BOLT, M8X 40 PLATED	3							
16	1	129150-25301	BOLT	4							
17	1	119802-25901	GEAR, PUMP	1							
18	1	158552-51151	FLANGE	1							
19	1	22217-140000	WASHER, SPRING 14	1							
20	1	26776-140002	NUT, LOCK M14	1							

Remarks
(1) REPAIR PART.

N:Old ←Yes/No→ New. Q:Old ←No/Yes→ New, R:Old ←Yes/Yes→ New, S:Old ←No/No→ New. W:Add. Z:Discontinued. F:Interchangeable by set. K:Q'ty Change

Copyright (C) YANMAR CO., LTD. All RightsReserved.

0CV10-M98900

Fig.8. CRANKSHAFT & PISTON

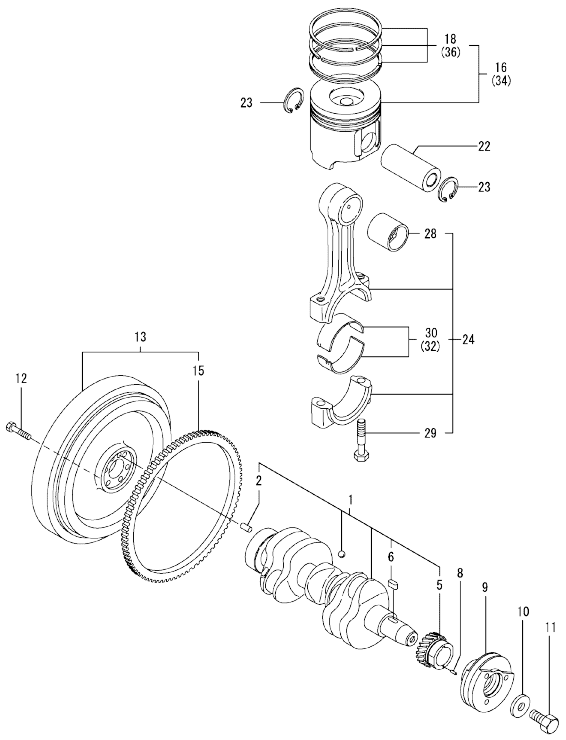

(A)=3TNV88-XMS (D)=
(B)= (E)=
(C)= (F)=

No.	Lev.	Parts No.	Description	Q'ty (A)	(B)	(C)	(D)	(E)	(F)	I	R
1	1	129004-21002	CRANKSHAFT ASSY	1							
2	2	129100-01580	PIN, M8X16	1							
5	2	119802-21202	GEAR, CRANKSHAFT	1							
6	2	22512-070140	KEY, 7X 14	1							
8	1	22351-030010	PIN, SPRING 3.0X10	1							
9	1	129004-21650	V-PULLEY, 110	1							
10	1	129795-21661	WASHER	1							
11	1	121850-21680	BOLT	1							
12	1	121111-21501	BOLT, FLYWHEEL	6							
13	1	171340-21580	FLYWHEEL ASSY	1							
15	2	119865-21600	GEAR, RING	1							
16	1	129005-22080	PISTON ASSY	3							
18	2	129005-22500	RING SET, PISTON	3							
22	1	129202-22300	PIN, PISTON D26 L70	3							
23	1	22252-000260	RING, 26	6							
24	1	729402-23100	ROD ASSY, CONNECTING	3							
28	2	129100-23910	BEARING, PISTON PIN	3							1
29	2	121550-23200	BOLT, CONNECTING ROD	6							
30	2	129150-23600	BEARING, CRANK PIN	3							
32	1	129150-23610	BEARING, 0.25 US	3							2
34	1	129005-22900	PISTON ASSY, 0.25 OS	3							3
36	2	129005-22950	RING SET, 0.25 OS	3							3

Remarks
(1) REPAIR PART.
(2) UNDER-SIZE(U.S=0.25)PART.
(3) OVER-SIZE(O.S=0.25)PART.

N:Old ◄Yes/No► New. Q:Old ◄No/Yes► New, R:Old ◄Yes/Yes► New, S:Old ◄No/No► New, W:Add, Z:Discontinued. F:Interchangeable by set. K:Q'ty Change

Copyright (C) YANMAR CO., LTD. All RightsReserved.

0CV10-M98900

Fig.9. LUB.OIL SYSTEM

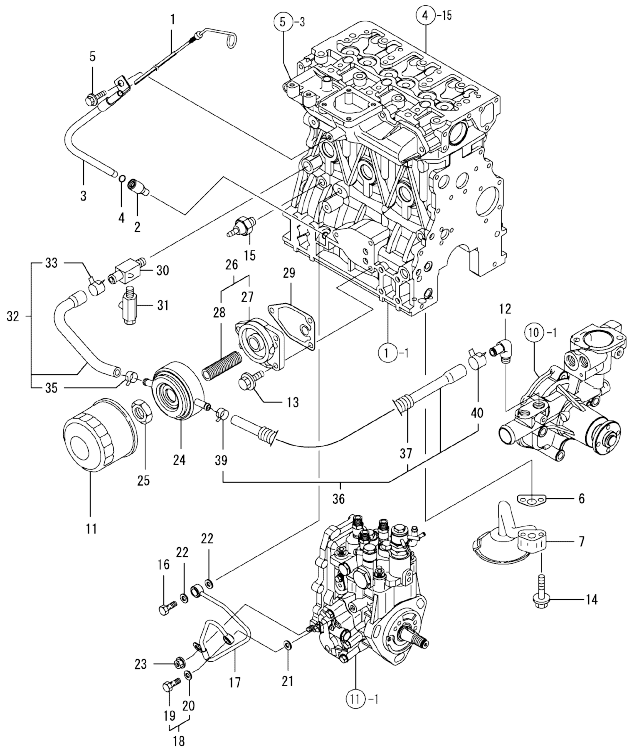

(A)=3TNV88-XMS
(B)=
(C)=
(D)=
(E)=
(F)=

No.	Lev.	Parts No.	Description	Q'ty (A)	(B)	(C)	(D)	(E)	(F)	I	R
1	1	129602-34801	DIPSTICK, OIL	1							
2	1	119260-34810	GUIDE, DIPSTICK	1							
3	1	119802-34850	GUIDE, DIPSTICK	1							
4	1	24311-240100	O-RING, 1AP10A	1							
5	1	26106-080162	BOLT, M8X 16 PLATED	1							
6	1	129150-35042	GASKET	1							
7	1	129150-35091	PIPE ASSY, OIL INLET	1							
11	1	129150-35153	FILTER 80X80L	1							1
12	1	129103-49301	ELBOW, PT1/4	1							
13	1	26106-080202	BOLT, M8X 20 PLATED	3							
14	1	26106-080352	BOLT, M8X 35 PLATED	2							
15	1	114250-39450	SWITCH, 0.5KG	1							
16	1	124160-39140	BOLT, PIPE JOINT M10	1							
17	1	119802-39450	PIPE ASSY, OIL	1							
18	1	129005-59830	BOLT ASSY, JOINT M8	1							
19	2	23857-030000	BOLT, JOINT 3	1							
20	2	22190-080002	WASHER, SEAL 6	1							
21	1	22190-080002	WASHER, SEAL 6	1							
22	1	22190-100002	WASHER, SEAL 10	2							
23	1	26366-060002	NUT, M6	1							
24	1	129508-33010	COOLER ASSY, OIL	1							
25	1	129417-33110	NUT	1							
26	1	129006-35100	BRACKET ASSY, FILTER	1							
27	2	119802-35110	BRACKET, FILTER	1							
28	2	129417-35150	STUD, L=67	1							
29	1	129150-35111	GASKET	1							
30	1	129006-44480	JOINT	1							
31	1	119620-49290	COCK ASSY, 1/4	1							
32	1	129508-49030	PIPE ASSY, WATER	1							
33	2	171008-03990	CLIP, HOSE 18.5	1							
35	2	23080-015000	CLAMP, 15	1							
36	1	129006-49040	PIPE ASSY, WATER	1							
37	2	123951-03330	TUBE, CORRUGATED	1							
39	2	23080-015000	CLAMP, 15	1							
40	2	23080-018000	CLAMP, 18	1							

Remarks
(1) REPAIR PART.

N:Old ←Yes/No→ New. Q:Old ←No/Yes→ New. R:Old ←Yes/Yes→ New. S:Old ←No/No→ New. W:Add. Z:Discontinued. F:Interchangeable by set. K:Q'ty Change

Copyright (C) YANMAR CO., LTD. All RightsReserved.

0CV10-M98900

Fig.10. COOLING WATER SYSTEM

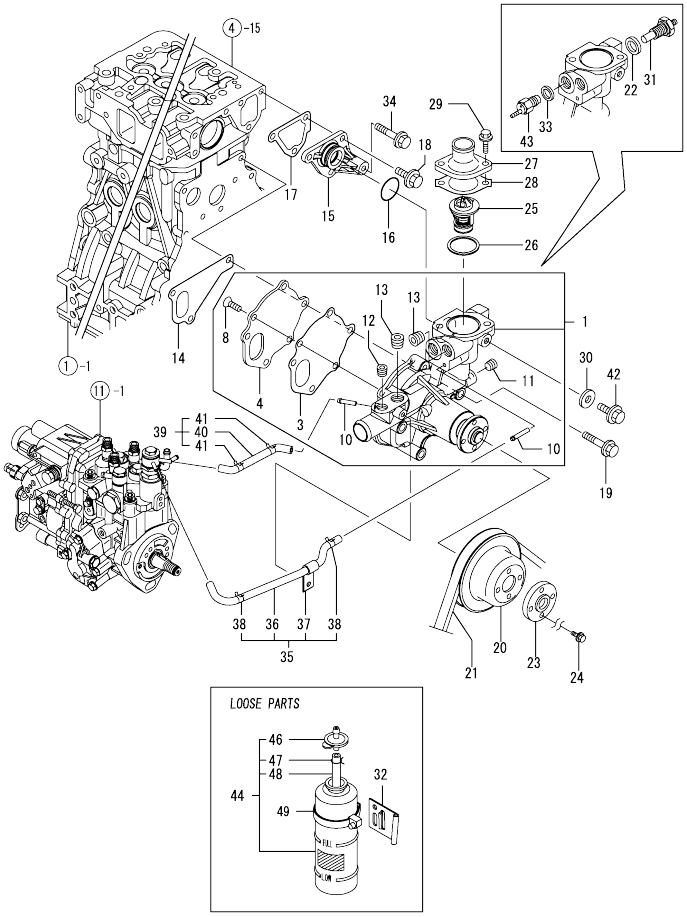

(A)=3TNV88-XMS (D)=
(B)= (E)=
(C)= (F)=

No.	Lev.	Parts No.	Description	Q'ty (A)	(B)	(C)	(D)	(E)	(F)	I	R
1	1	129004-42001	PUMP ASSY, WATER	1							
3	2	129100-42051	GASKET, WATER PUMP	1							
4	2	129100-42121	PLATE	1							
8	2	121850-42410	SCREW	3							
10	2	119802-49113	JOINT, PIPE	2							
11	2	23876-010000	PLUG, R01	1							
12	2	23875-020000	PLUG, R02	1							
13	2	129916-49740	PLUG, R03	2							
14	1	129486-42021	GASKET, WATER PUMP	1							
15	1	129004-42040	JOINT	1							
16	1	129486-42140	O-RING, G30	1							
17	1	124395-49840	GASKET	1							
18	1	26106-080162	BOLT, M8X 16 PLATED	3							
19	1	26106-080602	BOLT, M8X 60 PLATED	3							
20	1	129403-42380	V-PULLEY, D=110	1							
21	1	25132-003800	V-BELT, A38	1							
22	1	129150-49360	GASKET	1							
23	1	124574-44761	SPACER, FAN	1							
24	1	26106-060202	BOLT, M6X 20 PLATED	4							
25	1	129457-49801	THERMOSTAT, 82	1							
26	1	129150-49811	GASKET, THERMOSTAT	1							
27	1	129350-49530	COVER, THERMOSTAT	1							
28	1	129795-49551	GASKET	1							
29	1	26106-080222	BOLT, M8X 22 PLATED	2							
30	1	23414-080000	GASKET, 8X1.0	1							
31	1	124250-49351	SENSOR	1							
32	1	121256-44600	BRACKET, SUB TANK	1							
33	1	124465-44950	GASKET, 16	1							
34	1	26106-080452	BOLT, M8X 45 PLATED	1							
35	1	129004-49610	PIPE ASSY, WATER	1							
36	2	129004-49711	PIPE ASSY, WATER	1							
37	2	119802-49730	RETAINER, PIPE	1							
38	2	124722-59050	CLIP, HOSE 9	2							
39	1	129004-49620	PIPE ASSY, WATER	1							
40	2	129004-49721	PIPE ASSY, WATER	1							
41	2	124722-59050	CLIP, HOSE 9	2							
42	1	26106-080122	BOLT, M8X 12 PLATED	1							
43	1	121250-44901	SWITCH, 110	1							
44	1	124450-44510	TANK ASSY, SUB	1							
46	2	124450-44530	CAP	1							
47	2	124450-44560	RETAINER	1							
48	2	23061-070230	PIPE, 7X 230	1							
49	1	124450-44550	BAND	1							

N:Old ←Yes/No→ New. Q:Old ←No/Yes→ New. R:Old ←Yes/Yes→ New. S:Old ←No/No→ New. W:Add. Z:Discontinued. F:Interchangeable by set. K:Q'ty Change

Copyright (C) YANMAR CO., LTD. All RightsReserved.

0CV10-M98900

Fig.11. FUEL INJECTION PUMP

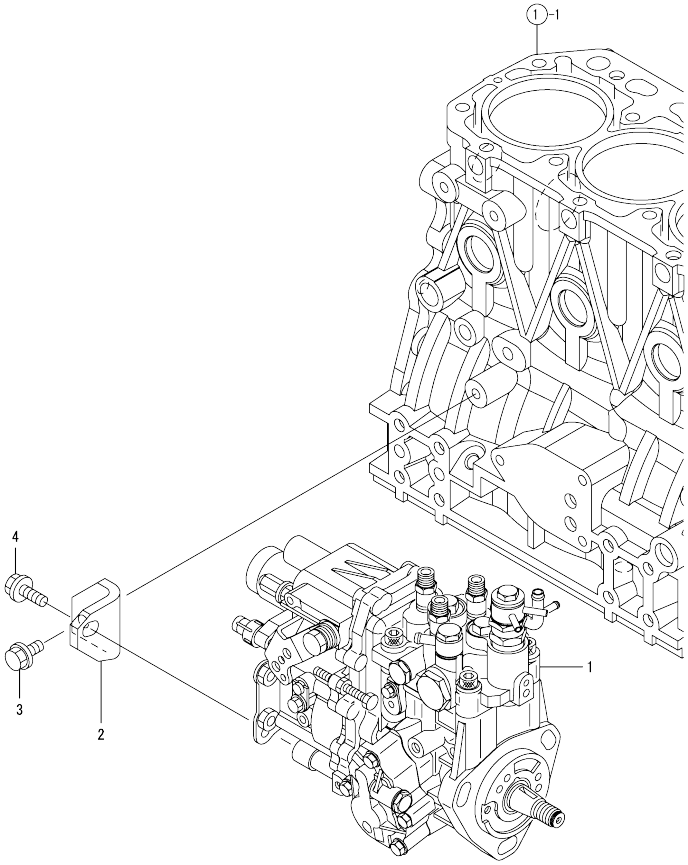

(A)=3TNV88-XMS (D)=
(B)= (E)=
(C)= (F)=

No.	Lev.	Parts No.	Description	Q'ty (A)	(B)	(C)	(D)	(E)	(F)	I	R
1	1	729245-51350	PUMP ASSY, INJECTION	1							
2	1	119802-51250	RETAINER, PUMP	1							
3	1	26106-080162	BOLT, M8X 16 PLATED	1							
4	1	26106-080202	BOLT, M8X 20 PLATED	1							

N:Old ←Yes/No→ New. Q:Old ←No/Yes→ New. R:Old ←Yes/Yes→ New. S:Old ←No/No→ New. W:Add. Z:Discontinued. F:Interchangeable by set. K:Q'ty Change

Copyright (C) YANMAR CO., LTD. All RightsReserved.

0CV10-M98900

Fig.12. FUEL INJECTION VALVE

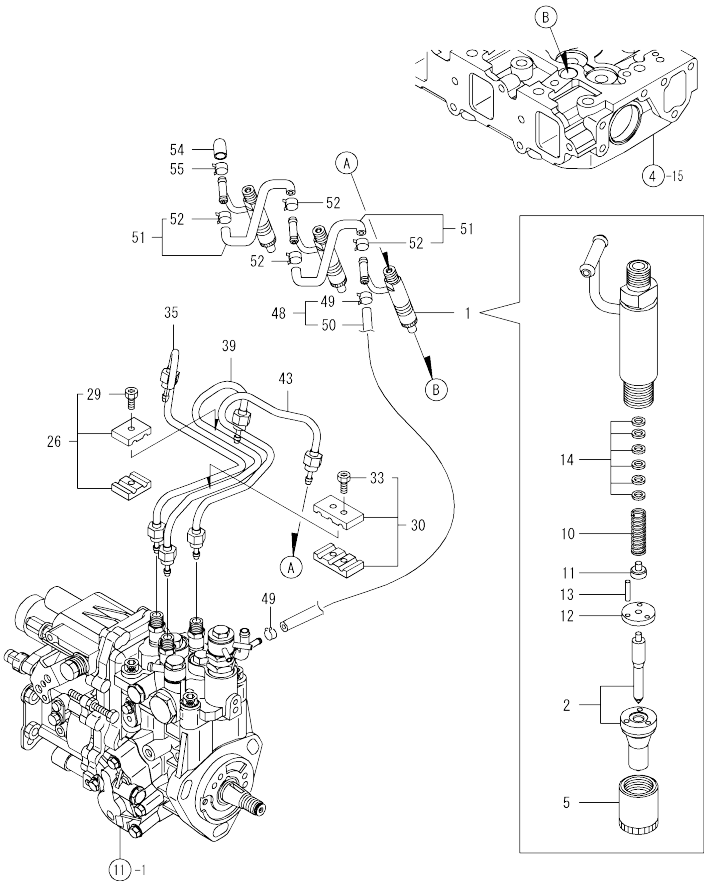

(A)=3TNV88-XMS (D)=
(B)= (E)=
(C)= (F)=

No.	Lev.	Parts No.	Description	Q'ty (A)	(B)	(C)	(D)	(E)	(F)	I	R
1	1	729044-53100	VALVE ASSY,INJECTION	3							
2	2	129006-53001	VALVE ASSY,INJECTION	3							
5	2	114250-53080	NUT, NOZZLE D16.95	3							
10	2	114250-53120	SPRING, NOZZLE	3							
11	2	114250-53130	SEAT, SPRING	3							
12	2	114250-53140	PLATE	3							
13	2	114250-53210	PIN	6							
14	2	114250-53400	SHIM SET	3							
26	1	119305-59120	RETAINER, PIPE	1							
29	2	129150-59131	BOLT, M4X14	1							
30	1	129150-59120	RETAINER, PIPE	1							
33	2	129150-59131	BOLT, M4X14	2							
35	1	129004-59810	PIPE ASSY, INJECTION	1							
39	1	129004-59820	PIPE ASSY, INJECTION	1							
43	1	129004-59830	PIPE ASSY, INJECTION	1							
48	1	119802-59550	PIPE ASSY, RETURN	1							
49	2	124722-59050	CLIP, HOSE 9	2							
50	2	119802-59560	PIPE, FUEL RETURN	1							
51	1	129486-59551	PIPE ASSY, RETURN	2							
52	2	124722-59050	CLIP, HOSE 9	4							
54	1	119593-59580	CAP	1							
55	1	124060-77680	CLIP, HOSE 10	1							

N:Old ←Yes/No→ New. Q:Old ←No/Yes→ New. R:Old ←Yes/Yes→ New. S:Old ←No/No→ New. W:Add. Z:Discontinued. F:Interchangeable by set. K:Q'ty Change

Copyright (C) YANMAR CO., LTD. All RightsReserved.

0CV10-M98900

Fig.13. FUEL LINE

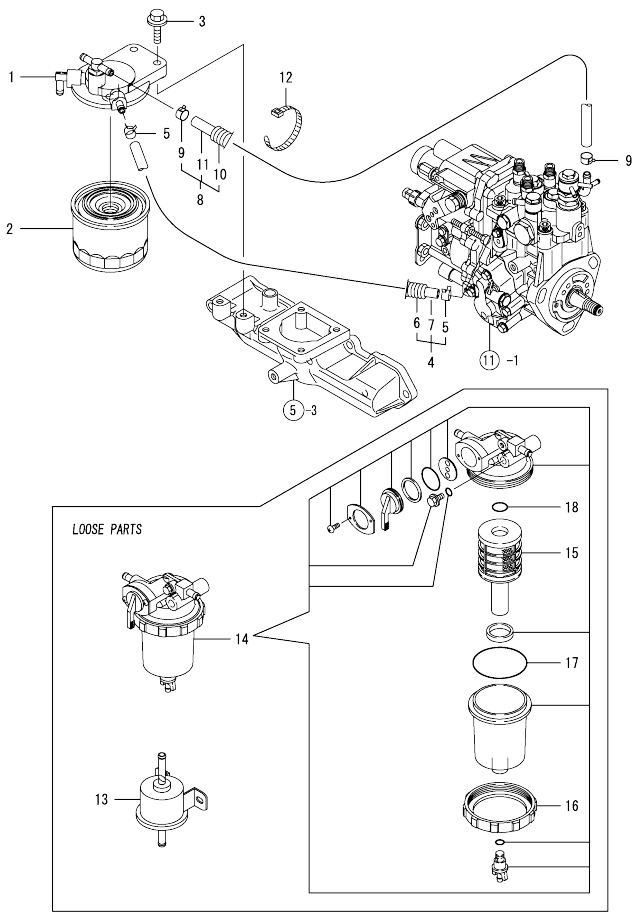

(A)=3TNV88-XMS (D)=
(B)= (E)=
(C)= (F)=

No.	Lev.	Parts No.	Description	Q'ty (A)	(B)	(C)	(D)	(E)	(F)	I	R
1	1	129004-55610	BRACKET, FILTER	1							
2	1	119802-55800	FILTER, FUEL	1							
3	1	26106-080302	BOLT, M8X 30 PLATED	2							
4	1	129044-59010	PIPE, D13/7.5X220	1							
5	2	124766-59050	CLIP, HOSE 12	2							
6	2	129044-59100	TUBE, CORRUGATED	1							
7	2	129044-59510	PIPE, FUEL 220	1							
8	1	129950-59311	PIPE, FUEL	1							
9	2	124766-59050	CLIP, HOSE 12	2							
10	2	129961-59110	TUBE, CORRUGATED	1							
11	2	105025-59580	PIPE, FUEL	1							
12	1	121750-59890	BAND, 140	1							
13	1	119225-52102	PUMP ASSY, FUEL FEED	1							
14	1	119802-55700	SEPARATOR ASSY	1							
15	2	119802-55710	ELEMENT	1							
16	2	129100-55690	RING, RETAINING	1							
17	2	24321-000650	O-RING, 1AG65.0	1							
18	2	24311-000160	O-RING, 1AP16.0	1							

N:Old ←Yes/No→ New. Q:Old ←No/Yes→ New. R:Old ←Yes/Yes→ New. S:Old ←No/No→ New. W:Add. Z:Discontinued. F:Interchangeable by set. K:Q'ty Change

Copyright (C) YANMAR CO., LTD. All RightsReserved.

0CV10-M98900

Fig.14. STARTING MOTOR

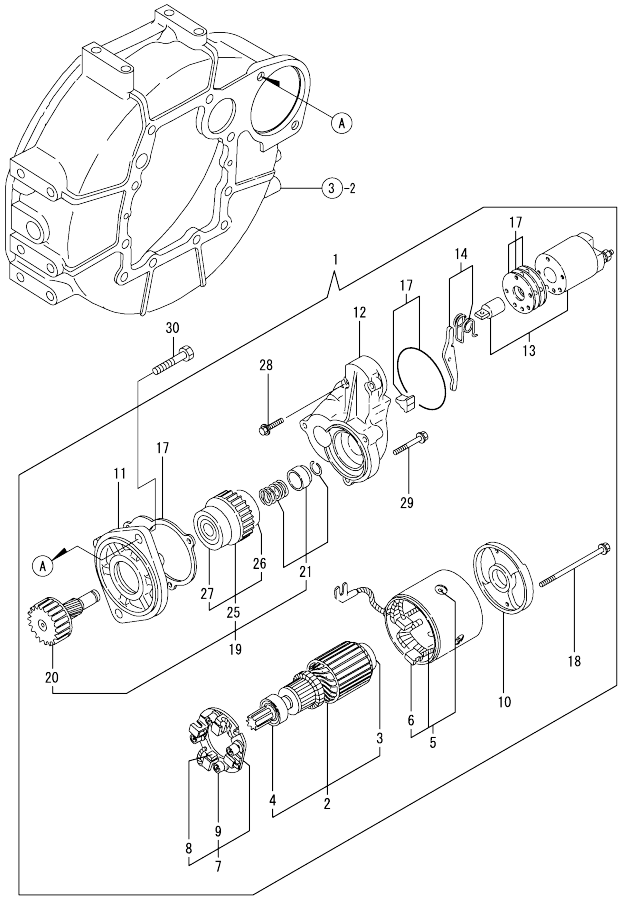

(A)=3TNV88-XMS (D)=
(B)= (E)=
(C)= (F)=

No.	Lev.	Parts No.	Description	Q'ty (A)	(B)	(C)	(D)	(E)	(F)	I	R
1	1	129400-77012	STARTING MOTOR	1							
2	2	129486-77400	ARMATUER	1							
3	3	171008-77410	BEARING(1)	1							
4	3	171008-77420	BEARING(2)	1							
5	2	129400-77441	COIL ASSY, FIELD	1							
6	3	129486-77460	BRUSH	2							
7	2	129486-77470	HOLDER ASSY, BRUSH	1							
8	3	129486-77460	BRUSH	2							
9	3	129486-77490	SPRING,START BRUSH	4							
10	2	129900-77460	COVER, REAR	1							
11	2	171008-77510	HOUSING ASSY, GEAR	1							
12	2	129400-77520	HOUSING, CENTER	1							
13	2	129400-77531	SWITCH ASSY,MAGNETIC	1							
14	2	171008-77540	LEVER SET, SHIFT	1							
17	2	129400-77571	DUST COVER,(NON-ASB.	1							
18	2	129900-77640	BOLT, THROUGHT	2							
19	2	171008-77650	PINION ASSY	1							
20	3	171008-77660	SHAFT, PINION	1							
21	3	171008-77670	STOPPER SET, PINION	1							
25	3	X2114555500	CLUTCH ASSY	1							
26	4	X2114955020	BALL BEARING	1							
27	4	X2240410100	BEARING, BALL	1							
28	2	26106-060322	BOLT, M6X 32 PLATED	2							
29	2	26106-060402	BOLT, M6X 40 PLATED	3							
30	1	26116-120252	BOLT, M12X 25 PLATED	2							

N:Old ←Yes/No→ New. Q:Old ←No/Yes→ New. R:Old ←Yes/Yes→ New. S:Old ←No/No→ New. W:Add. Z:Discontinued. F:Interchangeable by set. K:Q'ty Change

Copyright (C) YANMAR CO., LTD. All RightsReserved.

0CV10-M98900

Fig.15. GENERATOR

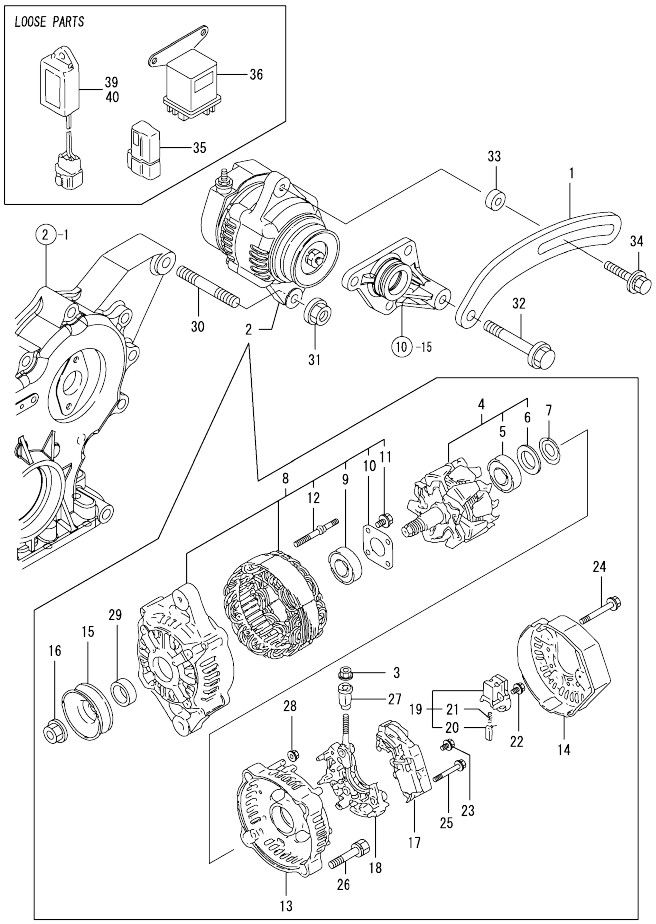

(A)=3TNV88-XMS (D)=
(B)= (E)=
(C)= (F)=

No.	Lev.	Parts No.	Description	Q'ty (A)	(B)	(C)	(D)	(E)	(F)	I	R
1	1	119802-77330	ADJUSTER	1							
2	1	129423-77200	GENERATOR, 12V-40A	1							
3	2	X9490561001	NUT	1							
4	2	119620-77380	ROTOR ASSY	1							
5	3	119620-79240	BALL BEARING	1							
6	3	119620-79250	COVER, BEARING	1							
7	2	119620-79360	WASHER, THRUST	1							
8	2	119620-77421	FRAME ASSY, DRIVE	1							
9	3	119620-79200	BALL BEARING	1							
10	3	119620-79210	PLATE	1							
11	3	119620-79220	SCREW	4							
12	3	119620-79230	BOLT, STUD	2							
13	2	119620-77440	FLAME ASSY, REAR	1							
14	2	129240-79300	COVER	1							
15	2	119620-77461	PULLEY	1							
16	2	119620-77471	NUT	1							
17	2	129423-77710	REGULATOR ASSY	1							
18	2	119620-79260	HOLDER	1							
19	2	119620-79270	HOLDER, BRUSH	1							
20	3	119620-77480	BRUSH ASSY	2							
21	3	119620-79280	SPRING	2							
22	2	119620-79290	SCREW	1							
23	2	119620-79300	SCREW	1							
24	2	119620-79310	BOLT	3							
25	2	119620-79320	SCREW W/WASHER	2							
26	2	119620-79330	BOLT	2							
27	2	119620-79340	INSULATION BUSH	1							
28	2	119620-79350	NUT	2							
29	2	119620-77490	COLLAR	1							
30	1	129795-01900	STUD	1							
31	1	26306-100002	NUT, M10	1							
32	1	26106-080452	BOLT, M8X 45 PLATED	1							
33	1	119940-77270	SPACER, GENERATOR	1							
34	1	119802-77340	BOLT, ADJUSTER	1							
35	1	119643-66900	DIODE	1							
36	1	119650-77910	RELAY ASSY, GLOW	1							
39	1	128300-77920	TIMER	1							
40	1	129211-77920	TIMER	1							

N:Old ←Yes/No→ New. Q:Old ←No/Yes→ New. R:Old ←Yes/Yes→ New. S:Old ←No/No→ New. W:Add. Z:Discontinued. F:Interchangeable by set. K:Q'ty Change

Copyright (C) YANMAR CO., LTD. All RightsReserved.

0CV10-M98900

Fig.16. GASKET SET

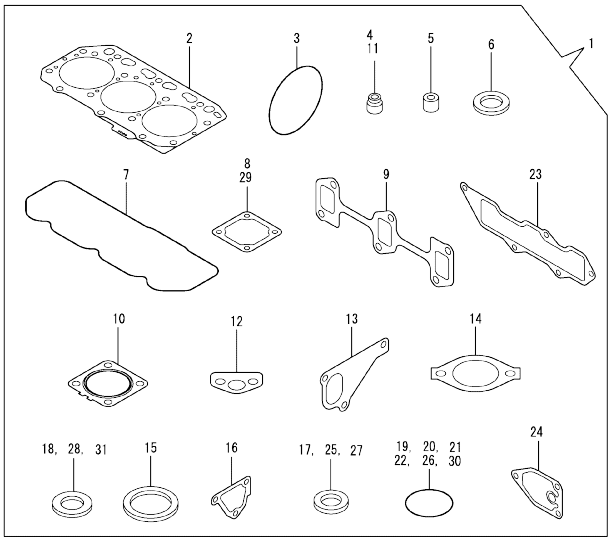

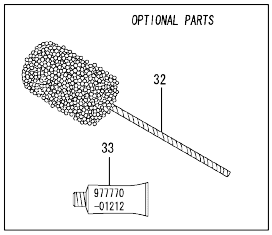

(A)=3TNV88-XMS (D)=
(B)= (E)=
(C)= (F)=

No.	Lev.	Parts No.	Description	Q'ty (A)	(B)	(C)	(D)	(E)	(F)	I	R
1	1	729001-92830	GASKET SET	1							1
2	2	129001-01340	GASKET, HEAD	1							
3	2	121850-51960	O-RING	1							
4	2	124460-11340	SEAL, VALVE STEM	3							
5	2	119802-11870	PROTECTOR, NOZZLE	3							
6	2	119625-11880	SEAT, NOZZLE	3							
7	2	129004-11310	GASKET, BONNET	1							
8	2	129150-77511	GASKET	1							
9	2	129150-13110	GASKET	1							
10	2	129004-13200	GASKET, SILENCER	1							
11	2	121400-11340	SEAL, VALVE STEM	3							
12	2	129150-35042	GASKET	1							
13	2	129486-42021	GASKET, WATER PUMP	1							
14	2	129795-49551	GASKET	1							
15	2	129150-49811	GASKET, THERMOSTAT	1							
16	2	124395-49840	GASKET	1							
17	2	22190-080002	WASHER, SEAL 6	2							
18	2	124465-44950	GASKET, 16	1							
19	2	24311-000120	O-RING, 1AP12.0	3							
20	2	24311-000320	O-RING, 1AP32.0	2							
21	2	24341-000240	O-RING, 1AS24.0	1							
22	2	129486-42140	O-RING, G30	1							
23	2	129001-12110	GASKET, MANIFOLD	1							
24	2	129150-35111	GASKET	1							
25	2	22190-220002	WASHER, SEAL 22	1							
26	2	119609-32040	O-RING, P16	4							
27	2	22190-100002	WASHER, SEAL 10	2							
28	2	23414-080000	GASKET, 8X1.0	1							
29	2	129100-77510	GASKET, AIR HEATER	1							
30	2	24311-240100	O-RING, 1AP10A	1							
31	2	129150-49360	GASKET	1							
32	1	129400-92430	HONE	1							1
33	1	977770-01212	GASKET, LIQUID	1							1

Remarks
(1) OPTIONAL PART.

N:Old $\xleftarrow[\text{No}]{\text{Yes}}$ New. Q:Old $\xleftarrow[\text{Yes}]{\text{No}}$ New, R:Old $\xleftarrow[\text{Yes}]{\text{Yes}}$ New, S:Old $\xleftarrow[\text{No}]{\text{No}}$ New. W:Add. Z:Discontinued. F:Interchangeable by set. K:Q'ty Change

Copyright (C) YANMAR CO., LTD. All RightsReserved.

Parts No. Index

Parts No.	Fig. No.	Ref. No.
105025-59580	13	11
114250-39450	9	15
114250-53080	12	5
114250-53120	12	10
114250-53130	12	11
114250-53140	12	12
114250-53210	12	13
114250-53400	12	14
119131-18320	6	4
119225-52102	13	13
119260-34810	9	2
119305-59120	12	26
119593-59580	12	54
119609-32040	2	17
	16	26
119620-01750	3	3
119620-49290	9	31
119620-77380	15	4
119620-77421	15	8
119620-77440	15	13
119620-77461	15	15
119620-77471	15	16
119620-77480	15	20
119620-77490	15	29
119620-79200	15	9
119620-79210	15	10
119620-79220	15	11
119620-79230	15	12
119620-79240	15	5
119620-79250	15	6
119620-79260	15	18
119620-79270	15	19
119620-79280	15	21
119620-79290	15	22
119620-79300	15	23
119620-79310	15	24
119620-79320	15	25
119620-79330	15	26
119620-79340	15	27
119620-79350	15	28
119620-79360	15	7
119625-11880	4	32
	16	6
119640-01640	3	9
119643-66900	15	35
119650-77910	15	36
119802-01520	2	12
119802-01560	2	13
119802-03110	4	43
119802-03121	4	44

Parts No.	Fig. No.	Ref. No.
119802-03130	4	45
119802-03141	4	46
119802-11260	4	6
119802-11270	4	7
119802-11280	4	8
119802-11870	4	55
	16	5
119802-21202	8	5
119802-25051	7	10
119802-25070	7	14
119802-25100	7	11
119802-25901	7	17
119802-32070	2	8
119802-32100	2	7
119802-32111	2	18
119802-32120	2	19
119802-32130	2	20
119802-34850	9	3
119802-35110	9	27
119802-39450	9	17
119802-49113	10	10
119802-49730	10	37
119802-51250	11	2
119802-55700	13	14
119802-55710	13	15
119802-55800	13	2
119802-59550	12	48
119802-59560	12	50
119802-77330	15	1
119802-77340	15	34
119865-21600	8	15
119940-77270	15	33
120130-11860	4	19
120270-54410	4	34
121023-01550	2	28
121111-21501	8	12
121250-44901	10	43
121256-44600	10	32
121400-11340	4	28
	16	11
121550-23200	8	29
121750-59890	13	12
121850-21680	8	11
121850-42410	10	8
121850-51960	2	21
	16	3
123900-13610	6	5
123900-13630	6	3
123951-03330	9	37
124060-01050	1	5

Parts No.	Fig. No.	Ref. No.
124060-77680	12	55
124160-01751	2	14
	4	39
124160-01910	1	7
		8
124160-11360	4	52
124160-39140	9	16
124240-01871	2	15
124250-49351	10	31
124395-49840	10	17
	16	16
124450-44510	10	44
124450-44530	10	46
124450-44550	10	49
124450-44560	10	47
124460-11340	4	29
	16	4
124465-44950	10	33
	16	18
124574-44761	10	23
124722-59050	10	38
		41
	12	49
		52
124766-59050	13	5
		9
128300-77920	15	39
129001-01250	1	6
129001-01340	1	33
	16	2
129001-02930	1	25
129001-12110	5	5
	16	23
129001-32330	2	11
129001-91841	2	22
129004-01190	1	31
129004-03010	4	41
129004-11241	4	3
129004-11251	4	4
129004-11310	4	49
	16	7
129004-11350	4	40
129004-11650	4	10
129004-11900	4	33
129004-13200	6	7
	16	10
129004-21002	8	1
129004-21650	8	9
129004-42001	10	1
129004-42040	10	15

Parts No.	Fig. No.	Ref. No.
129004-49610	10	35
129004-49620	10	39
129004-49711	10	36
129004-49721	10	40
129004-55610	13	1
129004-59810	12	35
129004-59820	12	39
129004-59830	12	43
129005-03080	5	1
129005-11100	4	24
129005-11700	4	15
129005-12100	5	3
129005-22080	8	16
129005-22500	8	18
129005-22900	8	34
129005-22950	8	36
129005-59830	9	18
129006-35100	9	26
129006-44480	9	30
129006-49040	9	36
129006-53001	12	2
129044-59010	13	4
129044-59100	13	6
129044-59510	13	7
129100-01580	3	1
		15
	8	2
129100-01640	3	16
129100-01730	3	6
129100-11110	4	25
129100-23910	8	28
129100-42051	10	3
129100-42121	10	4
129100-55690	13	16
129100-77500	5	8
129100-77510	5	9
	16	29
129103-49301	9	12
129129-14580	7	3
129150-01200	1	32
129150-02020	1	10
129150-02450	7	4
129150-02870	1	34
129150-02930	1	28
129150-02940	1	37
129150-03070	4	42
129150-11230	4	11
129150-11280	4	9
129150-11370	4	14
129150-11750	4	13

Parts No. Index

Parts No.	Fig. No.	Ref. No.
129150-11810	4	21
129150-13110	6	2
	16	9
129150-14101	7	7
129150-14200	7	1
129150-14400	7	2
129150-23600	8	30
129150-23610	8	32
129150-25301	7	16
129150-35042	9	6
	16	12
129150-35091	9	7
129150-35111	9	29
	16	24
129150-35153	9	11
129150-49360	10	22
	16	31
129150-49811	10	26
	16	15
129150-59120	12	30
129150-59131	12	29
		33
129150-77511	5	10
	16	8
129175-01770	3	8
129202-22300	8	22
129211-77920	15	40
129240-79300	15	14
129350-49530	10	27
129400-77012	14	1
129400-77441	14	5
129400-77520	14	12
129400-77531	14	13
129400-77571	14	17
129400-92430	16	32
129403-42380	10	20
129410-03990	5	2
129417-33110	9	25
129417-35150	9	28
129418-32320	2	10
129423-77200	15	2
129423-77710	15	17
129457-49801	10	25
129486-01670	3	19
129486-42021	10	14
	16	13
129486-42140	10	16
	16	22
129486-59551	12	51
129486-77400	14	2

Parts No.	Fig. No.	Ref. No.
129486-77460	14	6
		8
129486-77470	14	7
129486-77490	14	9
129508-33010	9	24
129508-49030	9	32
129602-34801	9	1
129612-01600	3	2
129795-01780	3	18
129795-01800	2	6
129795-01900	15	30
129795-01950	2	16
129795-02411	1	13
129795-11120	4	26
129795-11180	4	27
129795-21661	8	10
129795-49551	10	28
	16	14
129900-07900	4	1
129900-32130	2	9
129900-77460	14	10
129900-77640	14	18
129916-49740	10	13
129950-59311	13	8
129961-59110	13	10
158552-51151	7	18
171008-03990	9	33
171008-77410	14	3
171008-77420	14	4
171008-77510	14	11
171008-77540	14	14
171008-77650	14	19
171008-77660	14	20
171008-77670	14	21
171051-01921	1	9
171340-21580	8	13
171340-77520	5	11
171350-13100	6	1
22190-080002	9	20
		21
	16	17
22190-100002	9	22
	16	27
22190-220002	3	11
	16	25
22217-140000	7	19
22252-000260	8	23
22351-030010	8	8
22351-060012	4	35
22512-070140	7	8

Parts No.	Fig. No.	Ref. No.
22512-070140	8	6
22857-500100	4	50
		51
23061-070230	10	48
23080-015000	9	35
		39
23080-018000	9	40
23414-080000	10	30
	16	28
23857-030000	9	19
23875-020000	10	12
23876-010000	10	11
23876-030000	2	4
23876-040000	2	5
24311-000120	4	53
	16	19
24311-000160	13	18
24311-000320	2	23
	4	54
	16	20
24311-240100	9	4
	16	30
24321-000650	13	17
24341-000240	2	29
	16	21
25132-003800	10	21
26106-060162	2	30
26106-060202	10	24
26106-060322	14	28
26106-060402	14	29
26106-080122	10	42
26106-080142	4	2
	7	9
26106-080162	2	24
		25
	3	12
	9	5
	10	18
	11	3
26106-080202	5	6
	9	13
	11	4
26106-080222	10	29
26106-080252	3	13
	4	36
26106-080302	13	3
26106-080352	3	20
	4	37
	9	14
26106-080402	5	12

Parts No.	Fig. No.	Ref. No.
26106-080402	7	15
26106-080452	3	14
		14 -1
	10	34
	15	32
26106-080502	3	22
	4	38
26106-080552	2	26
26106-080602	10	19
26106-080802	5	7
		13
26116-120252	14	30
26206-100252	3	4
26206-100302	3	5
26306-080002	2	27
	6	6
26306-100002	15	31
26366-060002	9	23
26776-140002	7	20
27241-120000	1	14
27241-300000	1	15
27241-400000	4	23
27310-080001	4	30
719802-01500	2	1
729001-92830	16	1
729005-01560	1	1
729044-53100	12	1
729245-51350	11	1
729402-23100	8	24
977770-01212	2	31
	3	21
	4	56
	16	33
X2114555500	14	25
X2114955020	14	26
X2240410100	14	27
X9490561001	15	3