YANMAR

PARTS CATALOG

0CD50-M03950EN

Last update Mar., 2021

PREFACE

This parts catalog is the 1st edition of 3TNV88-ZMYTA for TRYSUN.

Published : May, 2018

Contents

0CD50-M03950

Fig. No.	Fig. Name
ENGINE	
1.	CYLINDER BLOCK
2.	GEAR HOUSING
3.	FLYWHEEL HOUSING & OIL SUMP
4.	CYLINDER HEAD & BONNET
5.	SUCTION MANIFOLD
6.	EXHAUST MANIFOLD
7.	CAMSHAFT & DRIVING GEAR
8.	CRANKSHAFT & PISTON
9.	LUB. OIL SYSTEM
10.	COOLING WATER SYSTEM
11.	FUEL INJECTION PUMP
12.	GOVERNOR
13.	FUEL INJECTION VALVE
14.	FUEL PIPE
15.	STARTER MOTOR
16.	GENERATOR
17.	ELECTRONIC CONTROL UNIT(ECU)
18.	ACCESSORY

Fig.1. CYLINDER BLOCK

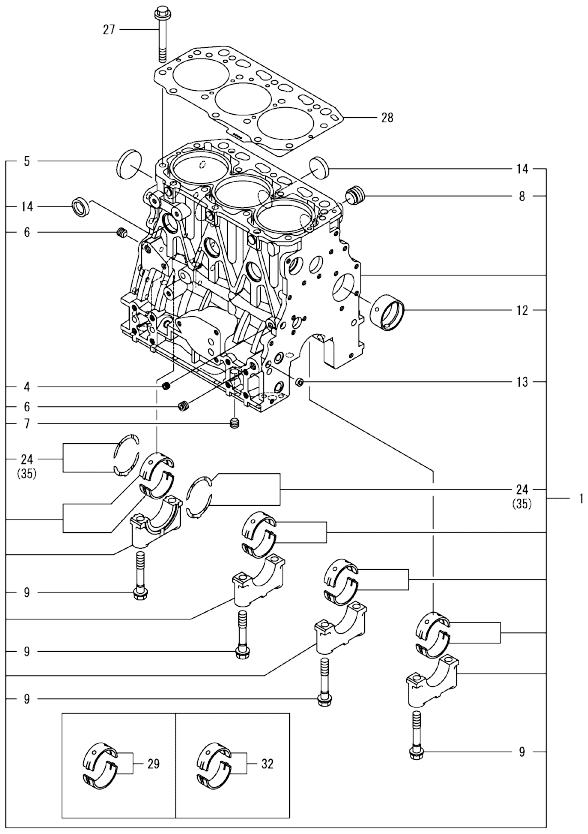

Remarks
(1)Spare parts.
(2)Under-sized(U.S.=0.25) parts.
(3)Over-sized(O.S.=0.25) parts.

(A)=3TNV88-ZMYTA
(B)=
(C)=
(D)=
(E)=
(F)=

No.	Lev.	Parts No.	Description	Q'ty (A)	(B)	(C)	(D)	(E)	(F)	I	R
1	1	729005-01560	BLOCK ASSY, CYLINDER	1							
4	2	124060-01050	PLUG, PT1/8	1							
5	2	129001-01250	PLUG, 50	1							
6	2	124160-01910	PLUG, PT1/4	2							
7	2	124160-01910	PLUG, PT1/4	1							
8	2	171051-01921	PLUG, NPTF1	1							
9	2	129150-02020	BOLT, METAL CAP	8							
12	2	129795-02412	BUSH, CAMSHAFT	1							
13	2	27241-120000	PLUG, 12	2							
14	2	27241-300000	PLUG 30	6							
24	2	129150-02931	METAL ASSY, THRUST	2							
27	1	129150-01200	BOLT, CYLINDER HEAD	14							
28	1	129001-01340	GASKET, HEAD	1							
29	1	129001-02931	METAL ASSY, MAIN	4							1
32	1	129150-02871	METAL ASSY, MAIN .25	4							2
35	1	129150-02941	METAL ASSY, 0.25 OS	1							3

N:Old ←Yes/No→ New. Q:Old ←No/Yes→ New. R:Old ←Yes/Yes→ New. S:Old ←No/No→ New. W:Add. Z:Discontinued. F:Interchangeable by set. K:Q'ty Change

Copyright (C) 2018 YANMAR GLOBAL CS CO., LTD. All RightsReserved.

Fig.2. GEAR HOUSING

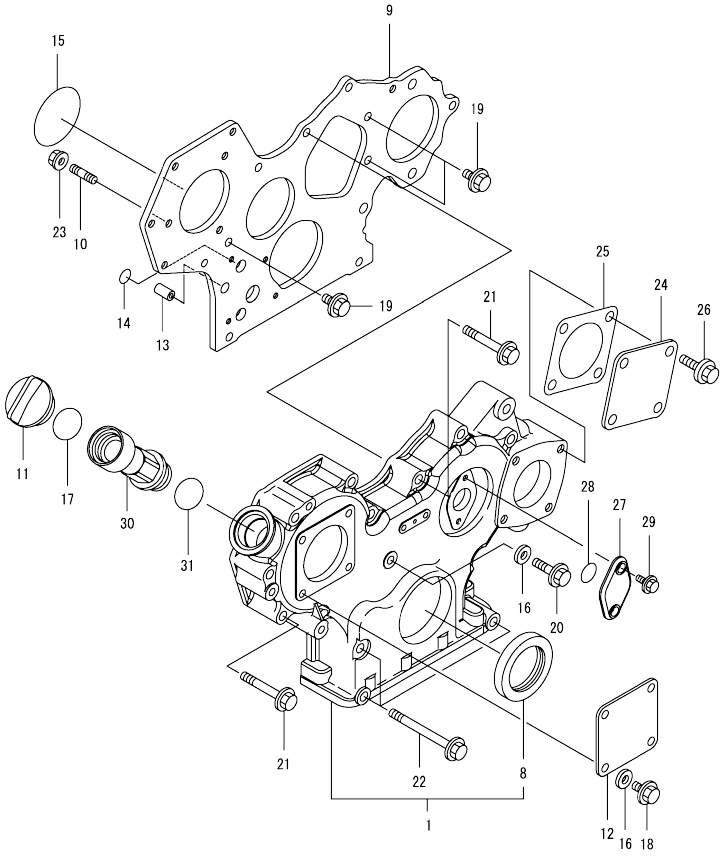

(A)=3TNV88-ZMYTA (D)=
(B)= (E)=
(C)= (F)=

No.	Lev.	Parts No.	Description	Q'ty (A)	(B)	(C)	(D)	(E)	(F)	I	R
1	1	729652-01500	CASE ASSY, GEAR	1							
8	2	119934-01800	SEAL, OIL	1							
9	1	129604-01520	FLANGE, GEAR CASE	1							
10	1	119802-01561	STUD, M8X25	3							
11	1	124160-01751	CAP, FILLER	1							
12	1	124240-01871	COVER,HYDRAULIC PUMP	1							
13	1	129795-01950	PIPE, KNOCK L=18	2							
14	1	119609-32040	O-RING, P16	2							
15	1	121850-51960	O-RING, FUEL PUMP	1							
16	1	22190-080002	WASHER, SEAL 8	5							
17	1	24311-000320	O-RING, 1AP32.0	1							
18	1	26106-080162	BOLT, M8X 16 PLATED	4							
19	1	26106-080162	BOLT, M8X 16 PLATED	3							
20	1	26106-080302	BOLT, M8X 30 PLATED	1							
21	1	26106-080552	BOLT, M8X 55 PLATED	10							
22	1	26106-080852	BOLT, M8X 85 PLATED	3							
23	1	26306-080002	NUT, M8	3							
24	1	124240-01871	COVER,HYDRAULIC PUMP	1							
25	1	129C26-01890	GASKET, PUMP	1							
26	1	26106-080162	BOLT, M8X 16 PLATED	4							
27	1	121023-01551	COVER, TACHOMETER	1							
28	1	24341-000240	O-RING, 1AS24.0	1							
29	1	26106-060162	BOLT, M6X 16 PLATED	2							
30	1	171031-11741	PIPE, FILLER	1							
31	1	24311-000320	O-RING, 1AP32.0	1							

N:Old ◄Yes/No► New. Q:Old ◄No/Yes► New. R:Old ◄Yes/Yes► New. S:Old ◄No/No► New. W:Add. Z:Discontinued. F:Interchangeable by set. K:Q'ty Change

Copyright (C) 2018 YANMAR GLOBAL CS CO., LTD. All RightsReserved.

Fig.3. FLYWHEEL HOUSING & OIL SUMP

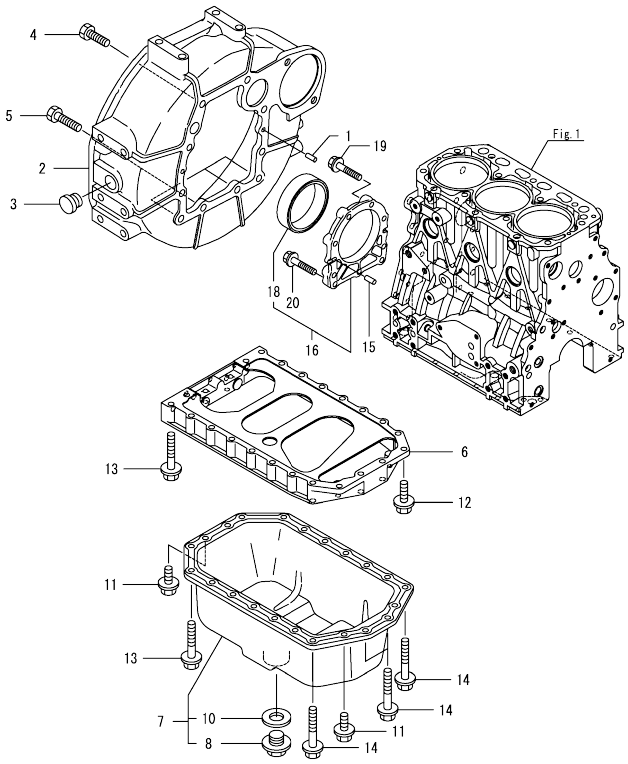

(A)=3TNV88-ZMYTA
(B)=
(C)=
(D)=
(E)=
(F)=

No.	Lev.	Parts No.	Description	Q'ty (A)	(B)	(C)	(D)	(E)	(F)	I	R
1	1	129100-01580	PIN, PARALLEL 8X16	2							
2	1	129612-01600	HOUSING, FLYWHEEL	1							
3	1	119620-01750	CAP, WHEEL COVER	1							
4	1	26206-100252	BOLT, M10X 25 PLATED	6							
5	1	26206-100302	BOLT, M10X 30 PLATED	4							
6	1	129100-01730	SPACER, OIL PAN	1							
7	1	129136-01780	OIL PAN ASSY	1							
8	2	119640-01640	PLUG, DRAIN M22	1							
10	2	22190-220002	WASHER, SEAL 22	1							
11	1	26106-080162	BOLT, M8X 16 PLATED	4							
12	1	26106-080252	BOLT, M8X 25 PLATED	2							
13	1	26106-080452	BOLT, M8X 45 PLATED	16							
14	1	26106-080502	BOLT, M8X 50 PLATED	4							
15	1	129100-01580	PIN, PARALLEL 8X16	2							
16	1	129648-01600	CASE ASSY, OIL SEAL	1							
18	2	129648-01780	SEAL, OIL	1							
19	1	129486-01670	BOLT, M8X30	6							
20	1	26106-080352	BOLT, M8X 35 PLATED	3							

N:Old ←Yes/No→ New. Q:Old ←No/Yes→ New. R:Old ←Yes/Yes→ New. S:Old ←No/No→ New. W:Add. Z:Discontinued. F:Interchangeable by set. K:Q'ty Change

Copyright (C) 2018 YANMAR GLOBAL CS CO., LTD. All RightsReserved.

Fig.4. CYLINDER HEAD & BONNET

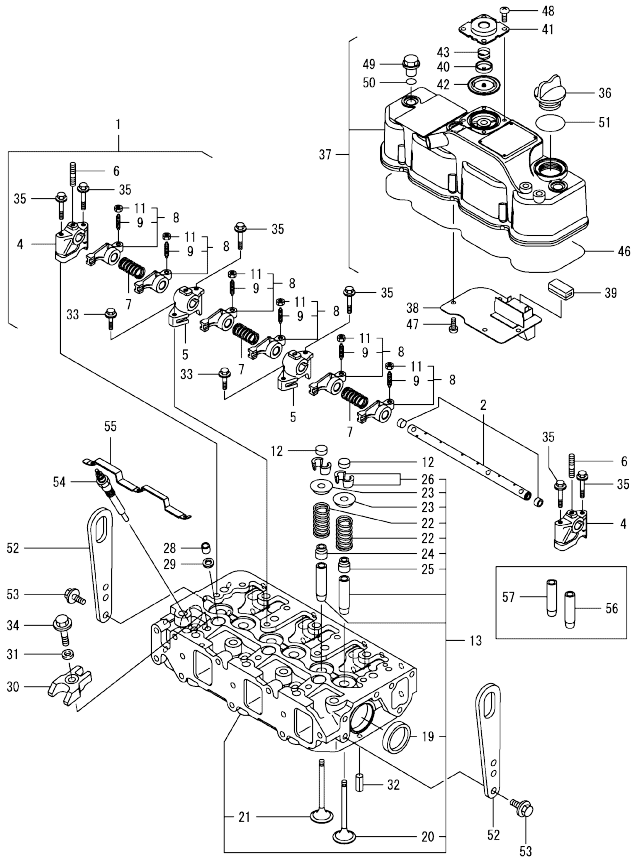

(A)=3TNV88-ZMYTA
(B)=
(C)=
(D)=
(E)=
(F)=

No.	Lev.	Parts No.	Description	Q'ty (A)	(B)	(C)	(D)	(E)	(F)	I	R
1	1	129004-11241	SHAFT ASSY, ROCKER	1							
2	2	129004-11251	SHAFT, ROCKER ARM	1							
4	2	119802-11260	SUPPORT, ROCKER ARM	2							
5	2	119802-11270	SUPPORT, ROCKER ARM	2							
6	2	119802-11280	BOLT, STUD	3							
7	2	129150-11280	SPRING, SHAFT	3							
8	2	129004-11650	ARM ASSY, ROCKER	6							
9	3	129150-11230	SCREW, VALVE ADJUST	6							
11	3	129150-11750	NUT, M8XP1.0	6							
12	1	129150-11370	CAP, VALVE	6							
13	1	129008-11700	HEAD ASSY, CYLINDER	1							
19	2	27241-400000	PLUG, 40	2							
20	2	129005-11100	VALVE, INTAKE	3							
21	2	129100-11112	VALVE, EXHAUST	3							
22	2	129795-11120	SPRING, VALVE	6							
23	2	129795-11180	RETAINER, SPRING	6							
24	2	121400-11340	SEAL, VALVE STEM	3							
25	2	124460-11340	SEAL, VALVE STEM	3							
26	2	27310-080001	COTTER, 8	6							
28	1	119802-11870	PROTECTOR, NOZZLE	3							
29	1	119625-11880	SEAT, NOZZLE	3							
30	1	129004-11900	RETAINER, NOZZLE	3							
31	1	120270-54410	WASHER, INJECTOR	3							
32	1	22351-060012	PIN, SPRING 6.0X12	2							
33	1	26106-080252	BOLT, M8X 25 PLATED	2							
34	1	26106-080352	BOLT, M8X 35 PLATED	3							
35	1	26106-080502	BOLT, M8X 50 PLATED	6							
36	1	124160-01751	CAP, FILLER	1							
37	1	129004-11350	BONNET ASSY, HEAD	1							
38	2	129004-03010	PLATE, BAFFLE	1							
39	2	129150-03070	BAFFLE, BREATHER	1							
40	2	119802-03110	PLATE, DIAPHRAGM	1							
41	2	119802-03121	COVER, DIAPHRAGM	1							
42	2	119802-03130	DIAPHRAGM, BREATHER	1							
43	2	119802-03141	SPRING, DIAPHRAGM	1							
46	2	129004-11310	GASKET, BONNET	1							
47	2	22857-500100	SCREW, 5X10	4							
48	2	22857-500100	SCREW, 5X10	4							
49	1	124160-11360	KNOB, BONNET	3							
50	1	24311-000120	O-RING, 1AP12.0	3							
51	1	24311-000320	O-RING, 1AP32.0	1							
52	1	129900-07900	LIFTER, ENGINE	2							
53	1	26106-080162	BOLT, M8X 16 PLATED	4							
54	1	129008-77800	PLUG, GLOW	3							
55	1	129008-77820	CONNECTOR, GLOW PLUG	1							
56	1	120130-11860	GUIDE, VALVE	3							1
57	1	129150-11810	GUIDE, VALVE	3							1

Remarks
(1)Spare parts.

N:Old ◄Yes/No► New. Q:Old ◄No/Yes► New. R:Old ◄Yes/Yes► New. S:Old ◄No/No► New. W:Add. Z:Discontinued. F:Interchangeable by set. K:Q'ty Change

Copyright (C) 2018 YANMAR GLOBAL CS CO., LTD. All RightsReserved.

Fig.5. SUCTION MANIFOLD

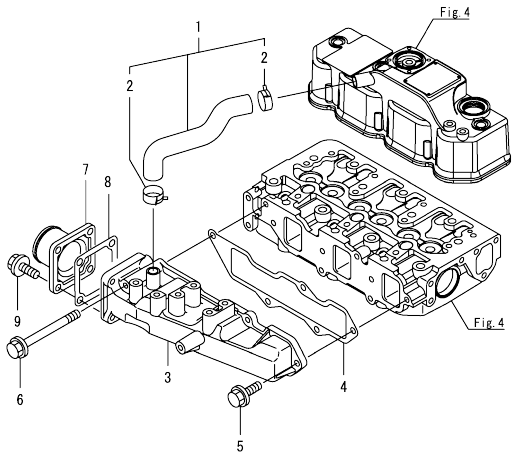

(A)=3TNV88-ZMYTA
(B)=
(C)=
(D)=
(E)=
(F)=

No.	Lev.	Parts No.	Description	Q'ty (A)	(B)	(C)	(D)	(E)	(F)	I	R
1	1	129004-03080	HOSE ASSY, BREATHER	1							
2	2	129410-03990	CLAMP, HOSE 21.5	2							
3	1	129004-12101	MANIFOLD, INTAKE	1							
4	1	129001-12110	GASKET, MANIFOLD	1							
5	1	26106-080202	BOLT, M8X 20 PLATED	4							
6	1	26106-080802	BOLT, M8X 80 PLATED	1							
7	1	129486-12581	JOINT, MANIFOLD	1							
8	1	129150-77511	GASKET, AIR HEATER	1							
9	1	26106-080202	BOLT, M8X 20 PLATED	4							

N:Old ◄Yes/No► New. Q:Old ◄No/Yes► New. R:Old ◄Yes/Yes► New. S:Old ◄No/No► New. W:Add. Z:Discontinued. F:Interchangeable by set. K:Q'ty Change

Copyright (C) 2018 YANMAR GLOBAL CS CO., LTD. All RightsReserved.

Fig.6. EXHAUST MANIFOLD

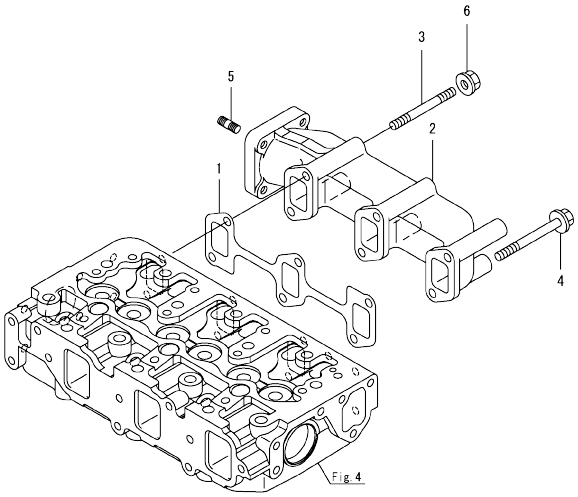

(A)=3TNV88-ZMYTA (D)=
(B)= (E)=
(C)= (F)=

No.	Lev.	Parts No.	Description	Q'ty (A)	(B)	(C)	(D)	(E)	(F)	I	R
1	1	129150-13110	GASKET, MANIFOLD	1							
2	1	129004-13129	MANIFOLD, EXHAUST	1							
3	1	123900-13610	STUD, M8X80	2							
4	1	129E00-13640	BOLT, M8X80 10.9T	4							
5	1	119131-18320	STUD, M8X22	4							
6	1	26306-080002	NUT, M8	2							

N:Old ◄Yes/No► New. Q:Old ◄No/Yes► New, R:Old ◄Yes/Yes► New, S:Old ◄No/No► New. W:Add, Z:Discontinued. F:Interchangeable by set. K:Q'ty Change

Copyright (C) 2018 YANMAR GLOBAL CS CO., LTD. All RightsReserved.

Fig.7. CAMSHAFT & DRIVING GEAR

(A)=3TNV88-ZMYTA (D)=
(B)= (E)=
(C)= (F)=

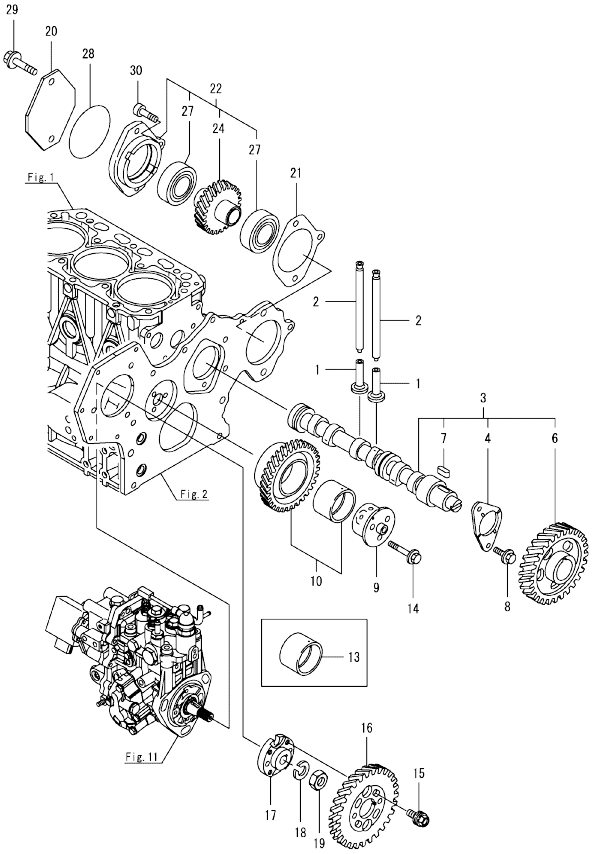

No.	Lev.	Parts No.	Description	Q'ty (A)	(B)	(C)	(D)	(E)	(F)	I	R
1	1	129150-14200	TAPPET	6							
2	1	129150-14400	ROD, PUSH L=178	6							
3	1	129129-14580	CAMSHAFT ASSY	1							
4	2	129150-02450	METAL, THRUST	1							
6	2	129150-14101	GEAR, CAMSHAFT	1							
7	2	22512-070140	KEY, 7X 14	1							
8	1	26106-080142	BOLT, M8X 14 PLATED	2							
9	1	119803-25050	SHAFT, IDLE GEAR	1							
10	1	119802-25101	GEAR ASSY, IDLE	1							
13	1	119802-25071	BUSH, IDLE GEAR	1							1
14	1	26106-080402	BOLT, M8X 40 PLATED	3							
15	1	129150-25301	BOLT, INJECTION PUMP	4							
16	1	119802-25901	GEAR, PUMP	1							
17	1	158552-51151	FLANGE, CAMSHAFT	1							
18	1	22217-140000	WASHER, SPRING 14	1							
19	1	26776-140002	NUT, LOCK M14	1							
20	1	121023-26071	COVER, PUMP	1							
21	1	171353-26081	GASKET, PUMP	1							
22	1	129484-26200	DRIVE ASSY, PUMP	1							
24	2	129484-26210	GEAR ASSY, PUMP	1							
27	2	24105-060064	BEARING, BALL 6006Z	2							
28	1	24321-000850	O-RING, 1AG85.0	1							
29	1	26106-100452	BOLT, M10X 45 PLATED	2							
30	1	26450-080282	BOLT, M8X 28	1							

Remarks
(1)Spare parts.

N:Old ←Yes/No→ New. Q:Old ←No/Yes→ New. R:Old ←Yes/Yes→ New. S:Old ←No/No→ New. W:Add. Z:Discontinued. F:Interchangeable by set. K:Q'ty Change

Copyright (C) 2018 YANMAR GLOBAL CS CO., LTD. All RightsReserved.

Fig.8. CRANKSHAFT & PISTON

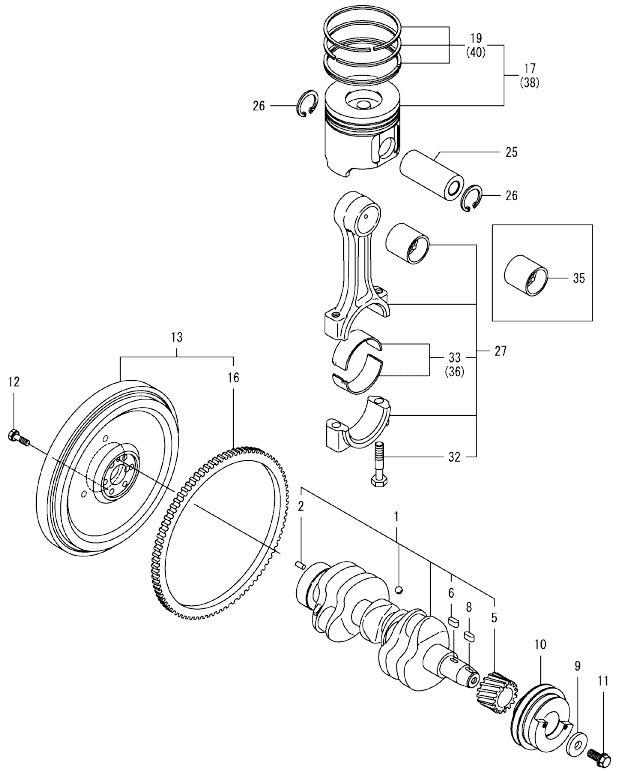

Remarks
(1)Spare parts.
(2)Under-sized(U.S.=0.25) parts.
(3)Over-sized(O.S.=0.25) parts.

(A)=3TNV88-ZMYTA
(B)=
(C)=
(D)=
(E)=
(F)=

No.	Lev.	Parts No.	Description	Q'ty (A)	(B)	(C)	(D)	(E)	(F)	I	R
1	1	129008-21000	CRANKSHAFT ASSY	1							
2	2	129100-01580	PIN, PARALLEL 8X16	1							
5	2	119803-21200	GEAR, CRANKSHAFT	1							
6	2	22512-070140	KEY, 7X 14	1							
8	1	22512-070140	KEY, 7X 14	1							
9	1	129795-21661	WASHER, 14	1							
10	1	129054-21671	V-PULLEY, CRANKSHAFT	1							
11	1	121850-21680	BOLT, V-PULLEY	1							
12	1	121111-21501	BOLT, FLYWHEEL	6							
13	1	129128-21590	FLYWHEEL ASSY	1							
16	2	119865-21600	GEAR, RING Z=116	1							
17	1	129005-22080	PISTON ASSY	3							
19	2	129005-22500	RING SET, PISTON	3							
25	1	129202-22300	PIN, PISTON D26 L70	3							
26	1	22252-000260	RING, 26	6							
27	1	729402-23100	ROD ASSY, CONNECTING	3							
32	2	121550-23200	BOLT, CONNECTING ROD	6							
33	2	129150-23601	METAL ASSY,CRANK PIN	3							
35	1	129100-23910	METAL, PISTON PIN	3							1
36	1	129150-23611	METAL, CRANK PIN .25	3							2
38	1	129005-22900	PISTON ASSY, 0.25 OS	3							3
40	2	129005-22950	RING SET, PISTON .25	3							3

N:Old ←Yes/No→ New. Q:Old ←No/Yes→ New. R:Old ←Yes/Yes→ New. S:Old ←No/No→ New. W:Add. Z:Discontinued. F:Interchangeable by set. K:Q'ty Change

Copyright (C) 2018 YANMAR GLOBAL CS CO., LTD. All RightsReserved.

Fig.9. LUB. OIL SYSTEM

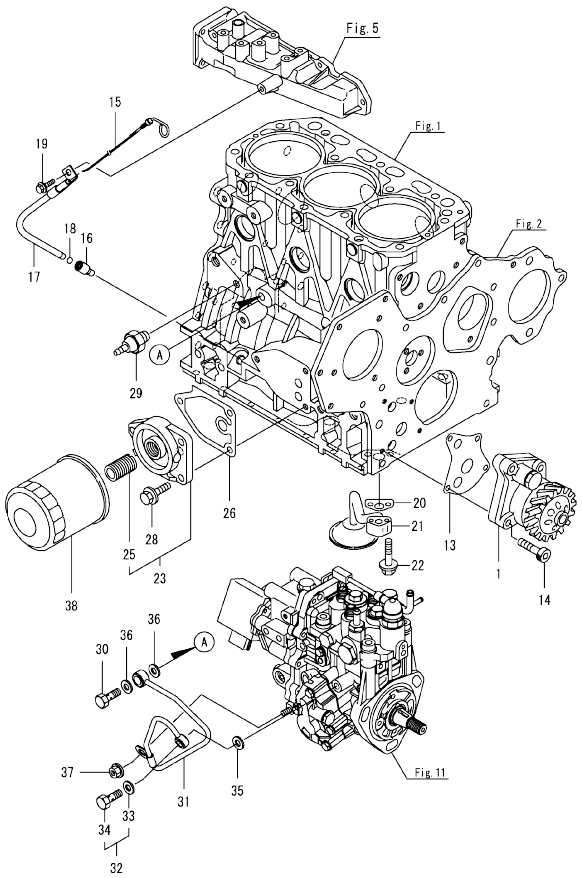

Remarks
(1)Spare parts.

(A)=3TNV88-ZMYTA (D)=
(B)= (E)=
(C)= (F)=

No.	Lev.	Parts No.	Description	Q'ty (A)	(B)	(C)	(D)	(E)	(F)	I	R
1	1	129001-32002	PUMP ASSY, OIL	1							
13	1	129150-32020	GASKET, PUMP	1							
14	1	26450-060252	BOLT, M6X 25	4							
15	1	129601-34801	DIPSTICK, OIL	1							
16	1	119260-34810	GUIDE, DIPSTICK	1							
17	1	119802-34850	GUIDE, DIPSTICK	1							
18	1	24316-240100	O-RING, 4DP10A	1							
19	1	26106-080162	BOLT, M8X 16 PLATED	1							
20	1	129150-35042	GASKET, INLET PIPE	1							
21	1	129100-35301	PIPE ASSY, OIL INLET	1							
22	1	26106-080352	BOLT, M8X 35 PLATED	2							
23	1	119802-35100	BRACKET ASSY, FILTER	1							
25	2	129100-35140	STUD	1							
26	1	129150-35111	GASKET, BRACKET	1							
28	1	26106-080202	BOLT, M8X 20 PLATED	3							
29	1	114250-39450	SWITCH, HYDRAULIC	1							
30	1	124160-39140	BOLT, PIPE JOINT M10	1							
31	1	119802-39450	PIPE ASSY, OIL	1							
32	1	129005-59830	BOLT ASSY, JOINT M8	1							
33	2	22190-080002	WASHER, SEAL 8	1							
34	2	23857-030000	BOLT, JOINT 3	1							
35	1	22190-080002	WASHER, SEAL 8	1							
36	1	22190-100002	WASHER, SEAL 10	2							
37	1	26366-060002	NUT, M6	1							
38	1	119005-35151	FILTER, OIL D80X100	1							1

N:Old $\frac{\text{Yes}}{\text{No}}$ New. Q:Old $\frac{\text{No}}{\text{Yes}}$ New. R:Old $\frac{\text{Yes}}{\text{Yes}}$ New. S:Old $\frac{\text{No}}{\text{No}}$ New. W:Add. Z:Discontinued. F:Interchangeable by set. K:Q'ty Change

Copyright (C) 2018 YANMAR GLOBAL CS CO., LTD. All RightsReserved.

Fig.10. COOLING WATER SYSTEM

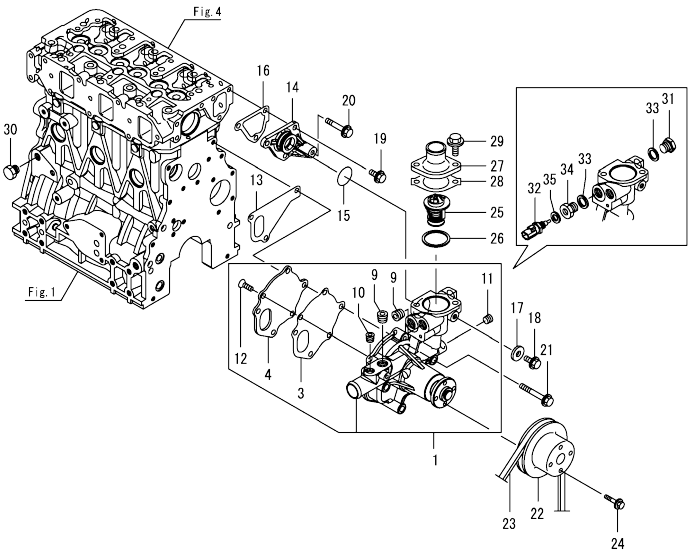

(A)=3TNV88-ZMYTA (D)=
(B)= (E)=
(C)= (F)=

No.	Lev.	Parts No.	Description	Q'ty (A)	(B)	(C)	(D)	(E)	(F)	I	R
1	1	129001-42004	PUMP ASSY, WATER	1							
3	2	129100-42051	GASKET, WATER PUMP	1							
4	2	129100-42121	PLATE, PUMP	1							
9	2	129916-49740	PLUG, R3/8	2							
10	2	23875-020000	PLUG, R02	1							
11	2	23876-010000	PLUG, R01	1							
12	2	26577-060142	SCREW M 6X 14	3							
13	1	129486-42021	GASKET, WATER PUMP	1							
14	1	129004-42040	JOINT, WATER PIPE	1							
15	1	129486-42140	O-RING, G30	1							
16	1	124395-49840	GASKET, THERMOSTAT	1							
17	1	23414-080000	GASKET, 8X1.0	1							
18	1	26106-080122	BOLT, M8X 12 PLATED	1							
19	1	26106-080162	BOLT, M8X 16 PLATED	3							
20	1	26106-080452	BOLT, M8X 45 PLATED	1							
21	1	26106-080602	BOLT, M8X 60 PLATED	3							
22	1	129550-42350	V-PULLEY, PUMP	1							
23	1	129612-42390	V-BELT, A40	1							
24	1	26106-060122	BOLT, M6X 12 PLATED	4							
25	1	129155-49801	THERMOSTAT, 71C	1							
26	1	129150-49811	GASKET, THERMOSTAT	1							
27	1	129350-49530	COVER, THERMOSTAT	1							
28	1	129795-49551	GASKET, COVER	1							
29	1	26106-080222	BOLT, M8X 22 PLATED	2							
30	1	171056-49120	PLUG, DRAIN R1/4	1							
31	1	121450-42450	PLUG, M16	1							
32	1	129927-44900	SENSOR, TEMPERATURE	1							
33	1	124465-44950	GASKET, 16	2							
34	1	129974-49350	JOINT, SENSOR	1							
35	1	22190-120002	WASHER, SEAL 12	1							

N:Old ←Yes/No→ New. Q:Old ←No/Yes→ New. R:Old ←Yes/Yes→ New. S:Old ←No/No→ New. W:Add. Z:Discontinued. F:Interchangeable by set. K:Q'ty Change

Copyright (C) 2018 YANMAR GLOBAL CS CO., LTD. All RightsReserved.

Fig.11. FUEL INJECTION PUMP

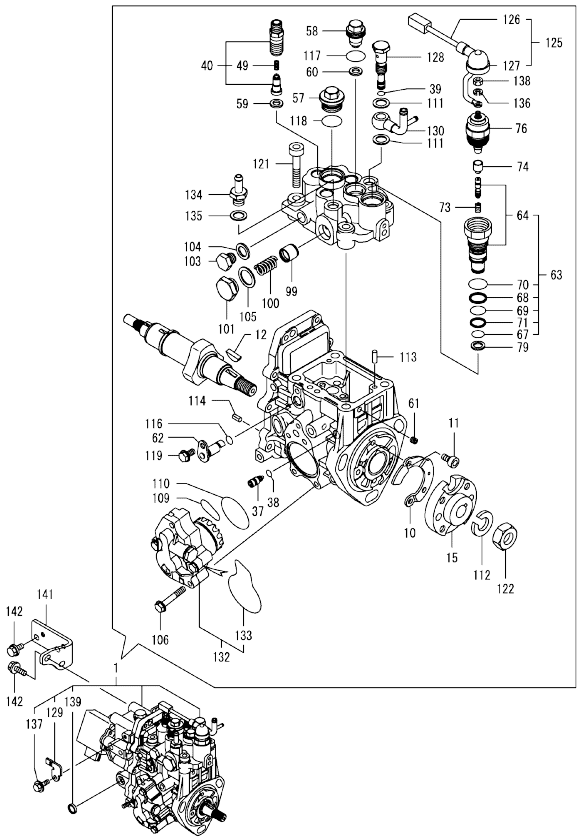

Remarks
(1)Governor(Fig.12) is incorporated in this Fuel Injection Pump(No.1).
(1)Eco pump
Make sure to update the engines ECU information when replacing the Eco pump.
Failing to do so will result in engine malfunction.

(A)=3TNV88-ZMYTA (D)=
(B)= (E)=
(C)= (F)=

No.	Lev.	Parts No.	Description	Q'ty (A)	(B)	(C)	(D)	(E)	(F)	I	R
1	1	729237-51400	PUMP ASSY, INJECTION	1							1
10	2	129008-51900	COVER, PUMP	1							
11	2	129008-51920	BOLT, M6X10	2							
12	2	119802-51090	KEY, FEATHER 4X16	1							
15	2	158552-51151	FLANGE, CAMSHAFT	1							
37	2	158600-51270	STOPPER, TAPPET	1							
38	2	158563-51281	O-RING, 4D S6	1							
39	2	158563-51281	O-RING, 4D S6	1							
40	2	129008-51390	VALVE ASSY, DELIVERY	3							
49	3	158563-51330	SPRING, DELIVERY	3							
57	2	158601-51550	PLUG, M22	1							
58	2	119802-51560	PLUG, BARREL M14	1							
59	2	158552-51571	GASKET, BARREL PLUG	3							
60	2	158552-51571	GASKET, BARREL PLUG	1							
61	2	158557-51570	PLUG, RACK	1							
62	2	158552-51580	LIFTER, LINK	1							
63	2	129657-51590	TIMER ASSY	1							
64	3	129657-51600	TIMER ASSY	1							
67	3	158553-51670	O-RING, PUMP TIMER	1							
68	3	119802-51680	RING, BACKUP	1							
69	3	119802-51690	O-RING, 1016	1							
70	3	24356-190200	O-RING, 4D19020	1							
71	3	24372-000150	RING, BACK UP T2P15	1							
73	2	119852-51630	SPRING, TIMER	1							
74	2	119852-51640	CAP, TIMER	1							
76	2	119852-51650	VALVE ASSY, SOLENOID	1							
79	2	158553-51680	GASKET, TIMER	1							
99	2	158601-51770	PISTON, ACCUMLATOR	1							
100	2	158552-51781	SPRING, ACCUMULATOR	1							
101	2	158601-51790	PLUG, ACCUMULATOR	1							
103	2	158553-51930	PLUG, M12	1							
104	2	22190-120002	WASHER, SEAL 12	1							
105	2	22190-180002	WASHER, SEAL 18	1							
106	2	158553-51770	BOLT	4							
109	2	158552-52311	O-RING, FEED PUMP	1							
110	2	158552-52400	O-RING, 4E S42	1							
111	2	22190-120002	WASHER, SEAL 12	2							
112	2	22217-140000	WASHER, SPRING 14	1							
113	2	22312-050140	PIN, PARALLEL 5X14	2							
114	2	22351-050010	PIN, SPRING 5.0X10	2							
116	2	24311-000070	O-RING, 1AP7.0	1							
117	2	24356-190180	O-RING, 4D19018	1							
118	2	24356-190200	O-RING, 4D19020	1							
119	2	26106-060102	BOLT, M6X 10 PLATED	1							
121	2	26450-080452	BOLT, M8X 45	4							
122	2	26776-140002	NUT, LOCK M14	1							
125	2	129927-51650	HARNESS ASSY, WIRE	1							
126	3	129927-51660	HARNESS	1							
127	3	129263-77941	CAP, RUBBER	1							
128	2	158601-51650	JOINT, OVERFLOW	1							
129	2	129927-51670	BRACKET	1							

N:Old ←Yes/No→ New. Q:Old ←No/Yes→ New. R:Old ←Yes/Yes→ New. S:Old ←No/No→ New. W:Add. Z:Discontinued. F:Interchangeable by set. K:Q'ty Change

++ CONTINUE ++

Copyright (C) 2018 YANMAR GLOBAL CS CO., LTD. All RightsReserved.

Fig.11. FUEL INJECTION PUMP

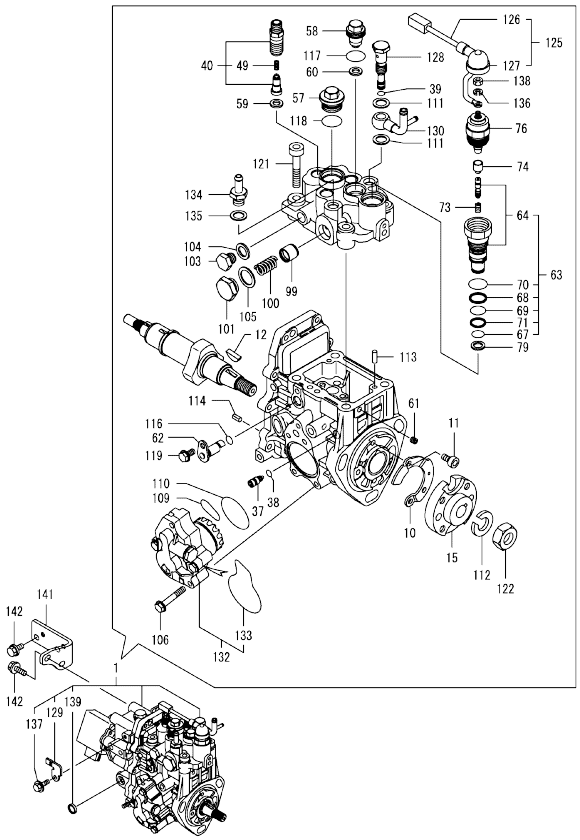

Remarks
(1)Governor(Fig.12) is incorporated in this Fuel Injection Pump(No.1).
(1)Eco pump
Make sure to update the engines ECU information when replacing the Eco pump.
Failing to do so will result in engine malfunction.

(A)=3TNV88-ZMYTA (D)=
(B)= (E)=
(C)= (F)=

No.	Lev.	Parts No.	Description	Q'ty (A)	(B)	(C)	(D)	(E)	(F)	I	R
130	2	158552-51670	JOINT, OVERFLOW	1							
132	2	158552-52100	PUMP ASSY, FUEL FEED	1							
133	3	158552-52500	O-RING, PUMP INNER	1							
134	2	119934-59910	JOINT, PIPE	1							
135	2	22190-120002	WASHER, SEAL 12	1							
136	2	22217-050000	WASHER, SPRING 5	1							
137	2	26106-060122	BOLT, M6X 12 PLATED	1							
138	2	26716-050002	NUT, M5	1							
139	2	27241-160000	PLUG, 16	1							
141	1	129263-51251	RETAINER, FUEL PUMP	1							
142	1	26106-080162	BOLT, M8X 16 PLATED	4							

N:Old ←Yes/No→ New. Q:Old ←No/Yes→ New. R:Old ←Yes/Yes→ New. S:Old ←No/No→ New. W:Add. Z:Discontinued. F:Interchangeable by set. K:Q'ty Change

Copyright (C) 2018 YANMAR GLOBAL CS CO., LTD. All RightsReserved.

Fig.12. GOVERNOR

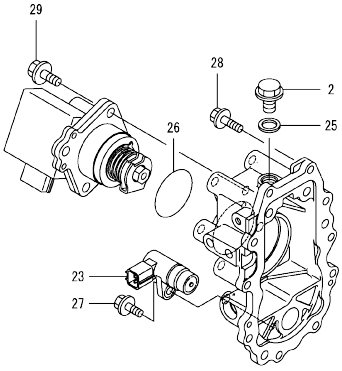

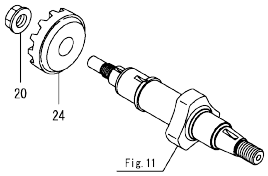

Fig.11

Remarks
* This figure(Governor) is incorporated in the Fuel Injection Pump(Fig.11).

(A)=3TNV88-ZMYTA (D)=
(B)= (E)=
(C)= (F)=

No.	Lev.	Parts No.	Description	Q'ty (A)	(B)	(C)	(D)	(E)	(F)	I	R
2	2	158553-51930	PLUG, M12	1							
20	2	129008-61301	NUT, SUPPORT	1							
23	2	158557-61720	SENSOR, ROTATION	1							
24	2	158553-61780	GEAR, SENSOR	1							
25	2	22190-120002	WASHER, SEAL 12	1							
26	2	24341-000480	O-RING, 1AS48.0	1							
27	2	26106-060162	BOLT, M6X 16 PLATED	1							
28	2	26106-060202	BOLT, M6X 20 PLATED	10							
29	2	26106-080252	BOLT, M8X 25 PLATED	3							

N:Old ◄Yes/No► New. Q:Old ◄No/Yes► New. R:Old ◄Yes/Yes► New. S:Old ◄No/No► New. W:Add. Z:Discontinued. F:Interchangeable by set. K:Q'ty Change

Copyright (C) 2018 YANMAR GLOBAL CS CO., LTD. All RightsReserved.

Fig.13. FUEL INJECTION VALVE

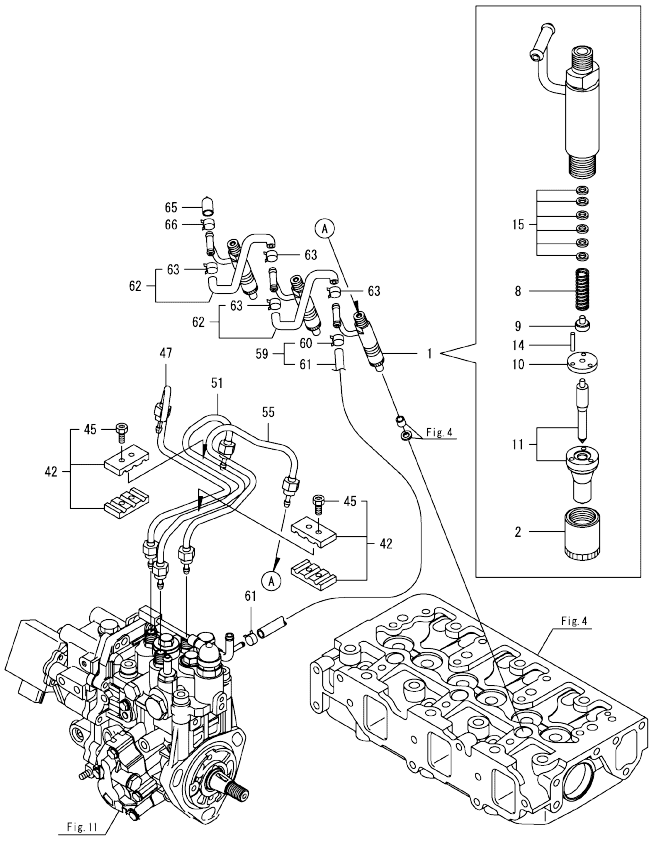

(A)=3TNV88-ZMYTA
(B)=
(C)=
(D)=
(E)=
(F)=

No.	Lev.	Parts No.	Description	Q'ty (A)	(B)	(C)	(D)	(E)	(F)	I	R
1	1	729008-53200	VALVE ASSY,INJECTION	3							
2	2	114250-53080	NUT, NOZZLE	3							
8	2	114250-53120	SPRING, NOZZLE	3							
9	2	114250-53130	SEAT, SPRING	3							
10	2	114250-53140	SPACER, VALVE STOP	3							
11	2	129008-53200	VALVE ASSY,INJECTION	3							
14	2	114250-53210	PIN, POSITIONING	6							
15	2	119803-53400	SHIM SET	3							1
42	1	129150-59120	RETAINER, PIPE	2							
45	2	129150-59131	BOLT, M4X14	4							
47	1	129004-59811	PIPE ASSY, INJECTION	1							
51	1	129004-59821	PIPE ASSY, INJECTION	1							
55	1	129004-59831	PIPE ASSY, INJECTION	1							
59	1	119802-59550	HOSE ASSY, RETURN	1							
60	2	124722-59050	CLAMP, HOSE 9	2							
61	2	119802-59560	HOSE, FUEL RETURN	1							
62	1	129486-59551	HOSE ASSY, RETURN	2							
63	2	124722-59050	CLAMP, HOSE 9	4							
65	1	119593-59581	CAP, RETURN PIPE	1							
66	1	124060-77680	CLAMP, HOSE 10	1							

Remarks
(1)Spare parts.

N:Old $\frac{\text{Yes}}{\text{No}}$ New. Q:Old $\frac{\text{No}}{\text{Yes}}$ New. R:Old $\frac{\text{Yes}}{\text{Yes}}$ New. S:Old $\frac{\text{No}}{\text{No}}$ New. W:Add. Z:Discontinued. F:Interchangeable by set. K:Q'ty Change

Copyright (C) 2018 YANMAR GLOBAL CS CO., LTD. All RightsReserved.

Fig.14. FUEL PIPE

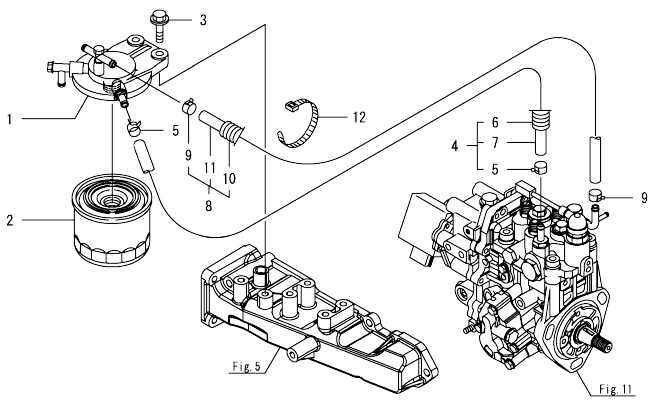

(A)=3TNV88-ZMYTA
(B)=
(C)=
(D)=
(E)=
(F)=

No.	Lev.	Parts No.	Description	Q'ty (A)	(B)	(C)	(D)	(E)	(F)	I	R
1	1	129004-55612	BRACKET, FILTER	1							
2	1	129004-55801	FILTER, FUEL	1							
3	1	26106-080302	BOLT, M8X 30 PLATED	2							
4	1	129044-59010	HOSE ASSY, D13XL220	1							
5	2	124766-59050	CLAMP, HOSE 11.5	2							
6	2	129044-59100	TUBE, CORRUGATED 15	1							
7	2	129044-59510	HOSE, FUEL L=220	1							
8	1	129950-59311	HOSE ASSY, FUEL	1							
9	2	124766-59050	CLAMP, HOSE 11.5	2							
10	2	129961-59110	TUBE, CORRUGATED 15	1							
11	2	105025-59580	HOSE, FUEL	1							
12	1	121750-59890	BAND, NYLON	1							

N:Old $\xleftarrow[\text{No}]{\text{Yes}}$ New. Q:Old $\xleftarrow[\text{Yes}]{\text{No}}$ New. R:Old $\xleftarrow[\text{Yes}]{\text{Yes}}$ New. S:Old $\xleftarrow[\text{No}]{\text{No}}$ New. W:Add. Z:Discontinued. F:Interchangeable by set. K:Q'ty Change

Copyright (C) 2018 YANMAR GLOBAL CS CO., LTD. All RightsReserved.

Fig.15. STARTER MOTOR

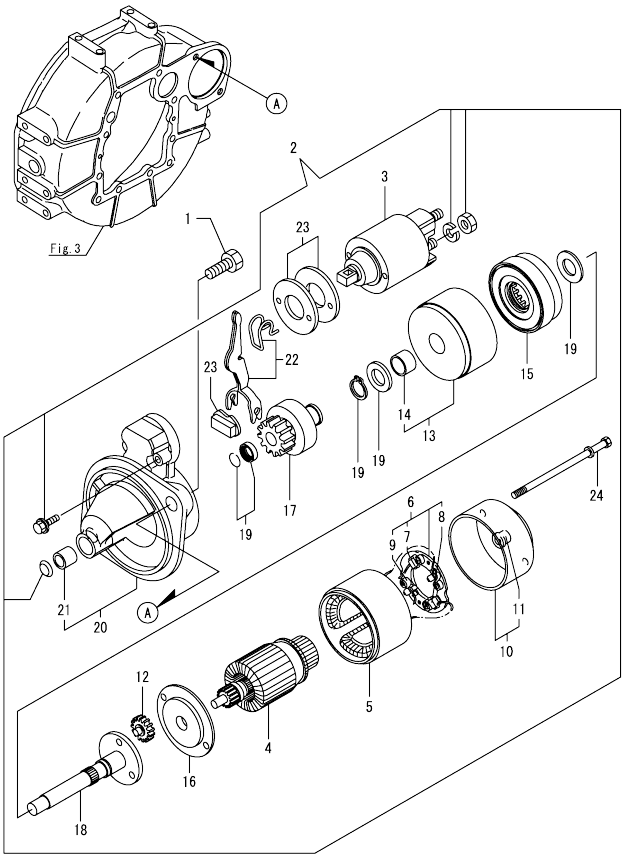

(A)=3TNV88-ZMYTA (D)=
(B)= (E)=
(C)= (F)=

No.	Lev.	Parts No.	Description	Q'ty (A)	(B)	(C)	(D)	(E)	(F)	I	R
1	1	26116-120202	BOLT, M12X 20 PLATED	2							
2	1	129242-77010	STARTER, 1.7	1							
3	2	129698-77020	SWITCH ASSY, MAGNET	1							
4	2	129242-77100	ARMATURE ASSY	1							
5	2	129242-77110	YOKE ASSY	1							
6	2	129242-77120	HOLDER ASSY, BRUSH	1							
7	3	129242-77130	BRUSH, -	2							
8	3	129242-77140	BRUSH SET	1							
9	3	129242-77150	SPRING, BRUSH	4							
10	2	129242-77160	COVER ASSY, STARTER	1							
11	3	129242-77170	METAL, REAR COVER	1							
12	2	118400-77170	GEAR, PLANETARY	3							
13	2	129242-77180	BRACKET, CENTER P	1							
14	3	129698-77190	BRACKET, CENTER	1							
15	2	129698-77200	GEAR, INTERNAL	1							
16	2	129242-77210	BRACKET, CENTER A	1							
17	2	129698-77220	PINION ASSY	1							
18	2	129698-77230	SHAFT, PINION	1							
19	2	129698-77250	WASHER SET	1							
20	2	129242-77260	CASE ASSY, GEAR	1							
21	3	X2114535200	METAL, STARTER	1							
22	2	129242-77270	LEVER SET, SHIFT	1							
23	2	129242-77280	COVER KIT, DUST	1							
24	2	124195-77770	BOLT, THROUGH	2							

N:Old ←Yes/No→ New. Q:Old ←No/Yes→ New. R:Old ←Yes/Yes→ New. S:Old ←No/No→ New. W:Add. Z:Discontinued. F:Interchangeable by set. K:Q'ty Change

Copyright (C) 2018 YANMAR GLOBAL CS CO., LTD. All RightsReserved.

Fig.16. GENERATOR

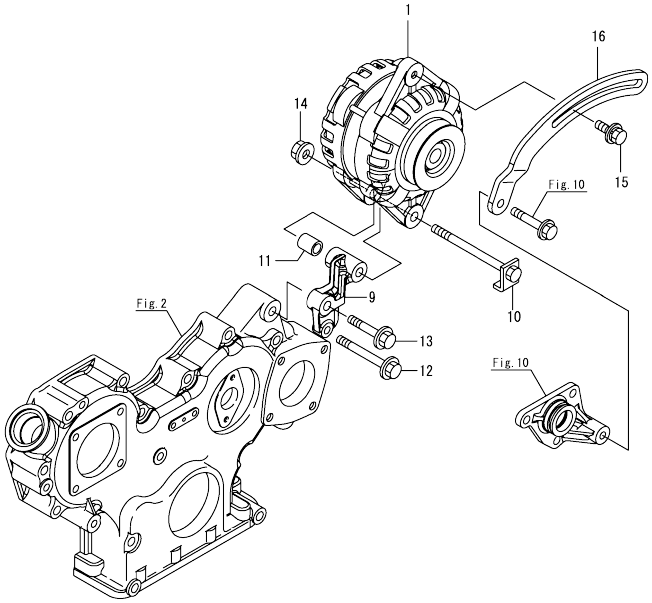

(A)=3TNV88-ZMYTA
(B)=
(C)=
(D)=
(E)=
(F)=

No.	Lev.	Parts No.	Description	Q'ty (A)	(B)	(C)	(D)	(E)	(F)	I	R
1	1	129908-77200	ALTERNATOR, 12V	1							
9	1	129242-77220	BRACKET, GENERATOR	1							
10	1	129908-77220	BOLT, STOPPER M10	1							
11	1	129908-77360	PIECE, DISTANCE	1							
12	1	26106-080702	BOLT, M8X 70 PLATED	1							
13	1	26106-100402	BOLT, M10X 40 PLATED	1							
14	1	26306-100002	NUT, M10	1							
15	1	119810-77340	BOLT, ADJUSTER L=30	1							
16	1	129688-77340	ADJUSTER, BELT	1							

N:Old ←Yes/No→ New. Q:Old ←No/Yes→ New, R:Old ←Yes/Yes→ New. S:Old ←No/No→ New. W:Add. Z:Discontinued. F:Interchangeable by set. K:Q'ty Change

Copyright (C) 2018 YANMAR GLOBAL CS CO., LTD. All RightsReserved.

Fig.17. ELECTRONIC CONTROL UNIT(ECU)

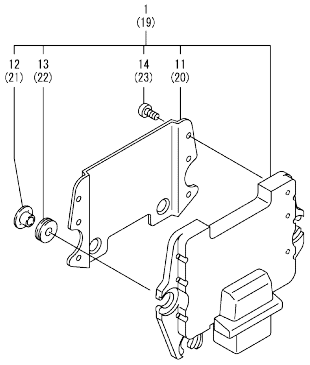

Remarks
(1)Eco ECU
This part cannot be ordered.
Replace the part using a Service ECU with the proper engine information installed.
(2)Service ECU
If the proper information is not installed, the engine will not operate.
To install proper information, go to an authorized distributor.

(A)=3TNV88-ZMYTA
(B)=
(C)=
(D)=
(E)=
(F)=

No.	Lev.	Parts No.	Description	Q'ty (A)	(B)	(C)	(D)	(E)	(F)	I	R
1	1	129242-75000	ECU ASSY,3TNV88-ZMYT	1							1
11	2	129927-77600	SHIELD, ECU	1							
12	2	129927-77680	COLLAR, CONTROLLER	3							
13	2	119578-91351	RUBBER, CONTROLLER	3							
14	2	22877-500080	SCREW, 5X 8	6							
19	1	129927-75901	ECU ASSY, SERVICE	1							2
20	2	129927-77600	SHIELD, ECU	1							
21	2	129927-77680	COLLAR, CONTROLLER	3							
22	2	119578-91351	RUBBER, CONTROLLER	3							
23	2	22877-500080	SCREW, 5X 8	6							

N:Old ◄Yes/No► New. Q:Old ◄No/Yes► New. R:Old ◄Yes/Yes► New. S:Old ◄No/No► New. W:Add. Z:Discontinued. F:Interchangeable by set. K:Q'ty Change

Copyright (C) 2018 YANMAR GLOBAL CS CO., LTD. All RightsReserved.

Fig.18. ACCESSORY

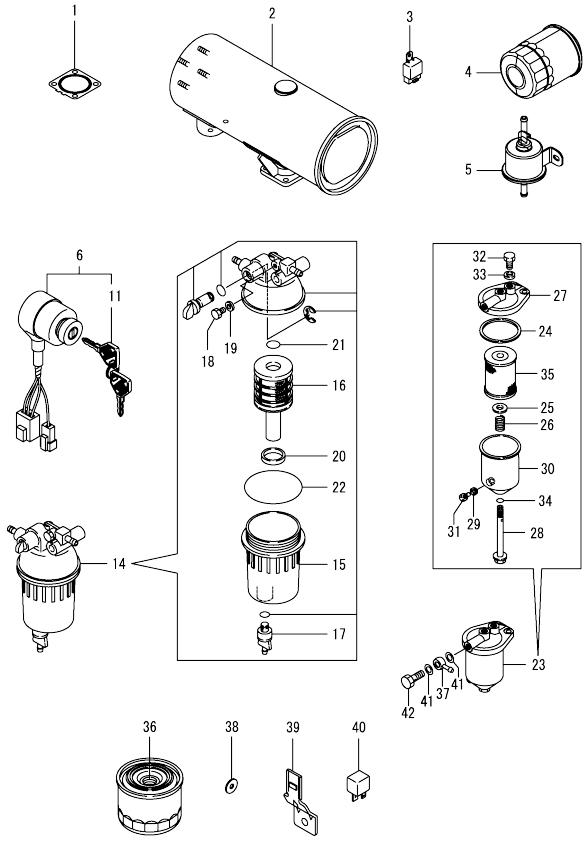

(A)=3TNV88-ZMYTA (D)=
(B)= (E)=
(C)= (F)=

No.	Lev.	Parts No.	Description	Q'ty (A)	(B)	(C)	(D)	(E)	(F)	I	R
1	1	129004-13200	GASKET, SILENCER	3							
2	1	129004-13550	SILENCER	1							
3	1	172B02-17150	RELAY, CA TYPE C	3							
4	1	119005-35151	FILTER, OIL D80X100	1							
5	1	129612-52100	PUMP, FUEL FEED	1							
6	1	194940-52110	SWITCH, STARTING	1							
6-1	1	129902-77500	SWITCH ASSY, STARTER	1						N	
	(A=E155520)										
11	2	198360-52160	KEY ASSY, SPARE	1							
14	1	129242-55701	SEPARATOR ASSY,WATER	1							
15	2	129242-55720	CUP, SEPARATOR	1							
16	2	129242-55730	ELEMENT, FUEL FILTER	1							
17	2	129242-55740	PLUG, DRAIN	1							
18	2	129242-55750	VALVE, AIR VENT	1							
19	2	129242-55760	GASKET, PLUG	1							
20	2	129242-55770	FLOAT	1							
21	2	24311-000160	O-RING, 1AP16.0	1							
22	2	24321-000750	O-RING, 1AG75.0	1							
23	1	129065-55750	SEPARATOR ASSY,WATER	1							
24	2	123325-35140	GASKET, COVER	1							
25	2	123325-35160	SEAT, SPRING	1							
26	2	129065-55170	SPRING, FILTER	1							
27	2	129495-55610	BODY, STRAINER	1							
28	2	129495-55620	BOLT, CENTER	1							
29	2	123672-55760	GASKET	1							
30	2	129065-55760	CASE, SEPARATOR	1							
31	2	129065-55770	PLUG, DRAIN M8	1							
32	2	129065-55800	PLUG, M14	1							
33	2	123678-55890	GASKET, PLUG	1							
34	2	24311-000120	O-RING, 1AP12.0	1							
35	2	41650-550800	ELEMENT, FUEL	1							
36	1	129004-55801	FILTER, FUEL	1							
37	1	121750-59910	JOINT, BALL 14	2							
38	1	129927-77690	WASHER, ECU	3							
39	1	129927-77910	BRACKET, CONNECTOR	2							
40	1	129927-77920	RELAY, ISO 70A	2							
41	1	22190-140002	WASHER, SEAL 14	4							
42	1	23857-080000	BOLT, JOINT 8	2							

N:Old ◄Yes/No► New. Q:Old ◄No/Yes► New. R:Old ◄Yes/Yes► New. S:Old ◄No/No► New. W:Add. Z:Discontinued. F:Interchangeable by set. K:Q'ty Change

Copyright (C) 2018 YANMAR GLOBAL CS CO., LTD. All RightsReserved.

Parts No. Index

Parts No.	Fig. No.	Ref. No.
105025-59580	14	11
114250-39450	9	29
114250-53080	13	2
114250-53120	13	8
114250-53130	13	9
114250-53140	13	10
114250-53210	13	14
118400-77170	15	12
119005-35151	9	38
	18	4
119131-18320	6	5
119260-34810	9	16
119578-91351	17	13
		22
119593-59581	13	65
119609-32040	2	14
119620-01750	3	3
119625-11880	4	29
119640-01640	3	8
119802-01561	2	10
119802-03110	4	40
119802-03121	4	41
119802-03130	4	42
119802-03141	4	43
119802-11260	4	4
119802-11270	4	5
119802-11280	4	6
119802-11870	4	28
119802-25071	7	13
119802-25101	7	10
119802-25901	7	16
119802-34850	9	17
119802-35100	9	23
119802-39450	9	31
119802-51090	11	12
119802-51560	11	58
119802-51680	11	68
119802-51690	11	69
119802-59550	13	59
119802-59560	13	61
119803-21200	8	5
119803-25050	7	9
119803-53400	13	15
119810-77340	16	15
119852-51630	11	73
119852-51640	11	74
119852-51650	11	76
119865-21600	8	16
119934-01800	2	8
119934-59910	11	134

Parts No.	Fig. No.	Ref. No.
120130-11860	4	56
120270-54410	4	31
121023-01551	2	27
121023-26071	7	20
121111-21501	8	12
121400-11340	4	24
121450-42450	10	31
121550-23200	8	32
121750-59890	14	12
121750-59910	18	37
121850-21680	8	11
121850-51960	2	15
123325-35140	18	24
123325-35160	18	25
123672-55760	18	29
123678-55890	18	33
123900-13610	6	3
124060-01050	1	4
124060-77680	13	66
124160-01751	2	11
	4	36
124160-01910	1	6
		7
124160-11360	4	49
124160-39140	9	30
124195-77770	15	24
124240-01871	2	12
		24
124395-49840	10	16
124460-11340	4	25
124465-44950	10	33
124722-59050	13	60
		63
124766-59050	14	5
		9
129001-01250	1	5
129001-01340	1	28
129001-02931	1	29
129001-12110	5	4
129001-32002	9	1
129001-42004	10	1
129004-03010	4	38
129004-03080	5	1
129004-11241	4	1
129004-11251	4	2
129004-11310	4	46
129004-11350	4	37
129004-11650	4	8
129004-11900	4	30
129004-12101	5	3

Parts No.	Fig. No.	Ref. No.
129004-13129	6	2
129004-13200	18	1
129004-13550	18	2
129004-42040	10	14
129004-55612	14	1
129004-55801	14	2
	18	36
129004-59811	13	47
129004-59821	13	51
129004-59831	13	55
129005-11100	4	20
129005-22080	8	17
129005-22500	8	19
129005-22900	8	38
129005-22950	8	40
129005-59830	9	32
129008-11700	4	13
129008-21000	8	1
129008-51390	11	40
129008-51900	11	10
129008-51920	11	11
129008-53200	13	11
129008-61301	12	20
129008-77800	4	54
129008-77820	4	55
129044-59010	14	4
129044-59100	14	6
129044-59510	14	7
129054-21671	8	10
129065-55170	18	26
129065-55750	18	23
129065-55760	18	30
129065-55770	18	31
129065-55800	18	32
129100-01580	3	1
		15
	8	2
129100-01730	3	6
129100-11112	4	21
129100-23910	8	35
129100-35140	9	25
129100-35301	9	21
129100-42051	10	3
129100-42121	10	4
129128-21590	8	13
129129-14580	7	3
129136-01780	3	7
129150-01200	1	27
129150-02020	1	9
129150-02450	7	4

Parts No.	Fig. No.	Ref. No.
129150-02871	1	32
129150-02931	1	24
129150-02941	1	35
129150-03070	4	39
129150-11230	4	9
129150-11280	4	7
129150-11370	4	12
129150-11750	4	11
129150-11810	4	57
129150-13110	6	1
129150-14101	7	6
129150-14200	7	1
129150-14400	7	2
129150-23601	8	33
129150-23611	8	36
129150-25301	7	15
129150-32020	9	13
129150-35042	9	20
129150-35111	9	26
129150-49811	10	26
129150-59120	13	42
129150-59131	13	45
129150-77511	5	8
129155-49801	10	25
129202-22300	8	25
129242-55701	18	14
129242-55720	18	15
129242-55730	18	16
129242-55740	18	17
129242-55750	18	18
129242-55760	18	19
129242-55770	18	20
129242-75000	17	1
129242-77010	15	2
129242-77100	15	4
129242-77110	15	5
129242-77120	15	6
129242-77130	15	7
129242-77140	15	8
129242-77150	15	9
129242-77160	15	10
129242-77170	15	11
129242-77180	15	13
129242-77210	15	16
129242-77220	16	9
129242-77260	15	20
129242-77270	15	22
129242-77280	15	23
129263-51251	11	141
129263-77941	11	127

Parts No. Index

Parts No.	Fig. No.	Ref. No.
129350-49530	10	27
129410-03990	5	2
129484-26200	7	22
129484-26210	7	24
129486-01670	3	19
129486-12581	5	7
129486-42021	10	13
129486-42140	10	15
129486-59551	13	62
129495-55610	18	27
129495-55620	18	28
129550-42350	10	22
129601-34801	9	15
129604-01520	2	9
129612-01600	3	2
129612-42390	10	23
129612-52100	18	5
129648-01600	3	16
129648-01780	3	18
129657-51590	11	63
129657-51600	11	64
129688-77340	16	16
129698-77020	15	3
129698-77190	15	14
129698-77200	15	15
129698-77220	15	17
129698-77230	15	18
129698-77250	15	19
129795-01950	2	13
129795-02412	1	12
129795-11120	4	22
129795-11180	4	23
129795-21661	8	9
129795-49551	10	28
129900-07900	4	52
129902-77500	18	6 -1
129908-77200	16	1
129908-77220	16	10
129908-77360	16	11
129916-49740	10	9
129927-44900	10	32
129927-51650	11	125
129927-51660	11	126
129927-51670	11	129
129927-75901	17	19
129927-77600	17	11
		20
129927-77680	17	12
		21
129927-77690	18	38

Parts No.	Fig. No.	Ref. No.
129927-77910	18	39
129927-77920	18	40
129950-59311	14	8
129961-59110	14	10
129974-49350	10	34
129C26-01890	2	25
129E00-13640	6	4
158552-51151	7	17
	11	15
158552-51571	11	59
		60
158552-51580	11	62
158552-51670	11	130
158552-51781	11	100
158552-52100	11	132
158552-52311	11	109
158552-52400	11	110
158552-52500	11	133
158553-51670	11	67
158553-51680	11	79
158553-51770	11	106
158553-51930	11	103
	12	2
158553-61780	12	24
158557-51570	11	61
158557-61720	12	23
158563-51281	11	38
		39
158563-51330	11	49
158600-51270	11	37
158601-51550	11	57
158601-51650	11	128
158601-51770	11	99
158601-51790	11	101
171031-11741	2	30
171051-01921	1	8
171056-49120	10	30
171353-26081	7	21
172B02-17150	18	3
194940-52110	18	6
198360-52160	18	11
22190-080002	2	16
	9	33
		35
22190-100002	9	36
22190-120002	10	35
	11	104
		111
		135
	12	25

Parts No.	Fig. No.	Ref. No.
22190-140002	18	41
22190-180002	11	105
22190-220002	3	10
22217-050000	11	136
22217-140000	7	18
	11	112
22252-000260	8	26
22312-050140	11	113
22351-050010	11	114
22351-060012	4	32
22512-070140	7	7
	8	6
		8
22857-500100	4	47
		48
22877-500080	17	14
		23
23414-080000	10	17
23857-030000	9	34
23857-080000	18	42
23875-020000	10	10
23876-010000	10	11
24105-060064	7	27
24311-000070	11	116
24311-000120	4	50
	18	34
24311-000160	18	21
24311-000320	2	17
		31
	4	51
24316-240100	9	18
24321-000750	18	22
24321-000850	7	28
24341-000240	2	28
24341-000480	12	26
24356-190180	11	117
24356-190200	11	70
		118
24372-000150	11	71
26106-060102	11	119
26106-060122	10	24
	11	137
26106-060162	2	29
	12	27
26106-060202	12	28
26106-080122	10	18
26106-080142	7	8
26106-080162	2	18
		19
		26

Parts No.	Fig. No.	Ref. No.
26106-080162	3	11
	4	53
	9	19
	10	19
	11	142
26106-080202	5	5
		9
	9	28
26106-080222	10	29
26106-080252	3	12
	4	33
	12	29
26106-080302	2	20
	14	3
26106-080352	3	20
	4	34
	9	22
26106-080402	7	14
26106-080452	3	13
	10	20
26106-080502	3	14
	4	35
26106-080552	2	21
26106-080602	10	21
26106-080702	16	12
26106-080802	5	6
26106-080852	2	22
26106-100402	16	13
26106-100452	7	29
26116-120202	15	1
26206-100252	3	4
26206-100302	3	5
26306-080002	2	23
	6	6
26306-100002	16	14
26366-060002	9	37
26450-060252	9	14
26450-080282	7	30
26450-080452	11	121
26577-060142	10	12
26716-050002	11	138
26776-140002	7	19
	11	122
27241-120000	1	13
27241-160000	11	139
27241-300000	1	14
27241-400000	4	19
27310-080001	4	26
41650-550800	18	35
729005-01560	1	1

Parts No. Index

Parts No.	Fig. No.	Ref. No.
729008-53200	13	1
729237-51400	11	1
729402-23100	8	27
729652-01500	2	1
X2114535200	15	21

Parts No.	Fig. No.	Ref. No.

Parts No.	Fig. No.	Ref. No.

Parts No.	Fig. No.	Ref. No.